Service Manual

9000	CODE No. 2071–200
α 9000	CODE No. 2071–400
MAXXUM 9000	CODE No. 2071–600

MINOLTA

IMPORTANT SERVICE INFORMATION

This service manual has been reprinted in its entirety. It includes certain sections that can only be serviced by utilizing specialized test equipment not for resale to the independent service facilities. It is therefore recommended that the sections listed below not be serviced in any manner.

If the AF mechanism is disturbed in any way by such attempts, the resulting repair will be both time consuming and costly. Minolta will assist if any repair or adjustment is needed for this area. Please contact the closest Regional branch.

Following is a list of the pages in this manual describing the areas not recommended for servicing.

SECTION	PAGE(S)	DESCRIPTION
REPAIR GUIDE	14 & 15	MIRROR BOX ASSEMBLING
"	32	AE ADJUSTING
"	36 to 41	AF ADJUSTING
"	58 & 59	PC BOARD REPLACING
"	60 & 61	AF DRIVE SET REPLACING
TROUBLESHOOTING CHART	2-8 & 2-11	AF/MANUAL FOCUSING FAILURE

MINOLTA 9000 (2071-200)
MINOLTA α 9000 (2071-400)
MINOLTA MAXXUM 9000 (2071-600)

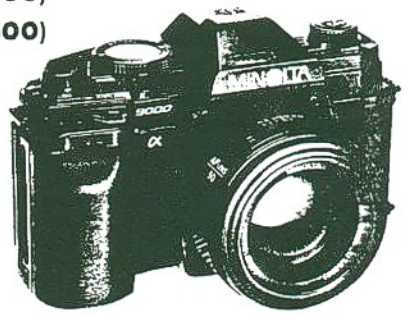

TYPE OF CAMERA

35mm SLR camera with autofocus and automatic exposure controlled by microcomputers.

Exposure mode : Programmed auto-exposure (P); aperture-priority auto-exposure (A); shutter speed-priority auto-exposure (S); metered manual exposure (M)

Standard lens : MINOLTA A LENS 50mm f : 1.7
50mm f : 1.4

Lens mount : Minolta A mount

Film : 35mm cartridge film

Film-frame size : 24mm × 36mm

SHUTTER

Electrically controlled vertical-traverse focal-plane type

Shutter speed : P, A modes : 1/4000 to 30 sec (stepless)
S, M modes : 1/4000 to 30 sec (with 1-EV settings), B

Shutter release : Electromagnetic shutter release ; with remote control terminal ; shutter locks when battery voltage is low

Operating button : With touch switch : metering and indication remain ON for 10 sec after the finger is removed from the touch switch ; with click stop on the half way
Touch switch : activates metering, indication and AF
Depressing halfway : activates auto-focusing and focus-hold
Depressing all the way : releases shutter

Self-timer : Electronic with 10 sec delay ; started by depressing operating button ; operation indicated by LED blinking, and by beeping sound with main switch in ON •))) position ; cancelable before shutter release.

FLASH SYNC

Type : TTL Direct Autoflash Metering (P, S, A, M modes)

Contact : Four contacts on hot shoe ; Direct contact at bottom of body for CONTROL GRIP

Sync speed : P mode···automatically set at 1/250, 1/125 or 1/60 sec
A mode···automatically set at 1/250 sec ; slow shutter sync possible by engaging AE lock
S, M modes···1/250 to 30 sec (with 1-EV setting) ; set at 1/250 sec for manually set speed of 1/250 sec or faster

AF-assist : By pre-emission of light

FILM WINDING, REWINDING

Type : Manual winding, rewinding (automatic

Winding : Angle of movement : 128° (with 30° stand-off angle) ; Multiple strokes are possible.

Frame counter : Additive type (automatic reset

Rewinding : Manual by rewinding-release button and rewinding crank Rewinding-release button is reset automatically.

Multiple exposure : possible by multiple-exposure button

VIEWFINDER

Type : SLR pentaprism type fixed

Focusing screen : Acute-matte focusing screen with spot metering circle and focus zone ; interchangeable by user (5 kinds

Field of view : 94% of 24 × 36mm film-frame area

Magnification : 0.81 × with 50mm standard lens focused at infinity

Dioptric power : Built-in eyepiece correction −3 to +1 diop.)

Lighting : Built-in LED to light viewfinder indication ; automatically turned ON with BV 4 or lower

Mirror : Swing-back type quick return mirror (half-mirror) with sub-mirror

VIEWFINDER INDICATION

Exposure indication (LCD) : Exposure mode, shutter speed, film speed (ISO setting), aperture, metering out-of-range warning, metered manual point, exposure adjustment value (+/−), metering mode, program shift, shutter/aperture out-of-range

Flash indication : Flash-ready signal (2Hz) and sufficient exposure signal (8Hz) indicated by blinking $\frac{L}{F}$ (red LED)

Focus indication : Autofocus
- In-focus indication "○" (green LED) glows
- Too-close warning "▷" (red LED) glows
- Unmeasurable warning "▷◁" (red LED) blinks

Manual focus
- In-focus indication "○" (green LED) blinks
- Far-focus/near-focus indication "▷"

• Unmeasurable warning "▷◁" (red LED) blinks

Other indication : Battery exhaustion warning, bulb elapsed time (counter)

LCD IN DATA PANEL (BODY LCD)

Exposure indication : Shutter speed, film speed (ISO setting), aperture, exposure adjustment value (+/−), "ISO", reminder manual setting, shutter/aperture out-of-range warning, preview setting

Other indication : Stand-by setting, battery exhaustion warning

METERING CONTROL

Metering : TTL center-weighted averaging/spot metering type ; full aperture metering ; In spot metering, normal, highlight-, or shadow-based spot metering is selectable ;
Direct (TTL off-film) metering with exclusive flash

Receiver element : 1 compound silicon photocell (at bottom of mirror box)

Auto exposure : Center-weighted averaging :
EV 1 to 20 with ISO 100 film and f : 1.4 lens
Spot metering :
EV 3 to 20 with ISO 100 film and f : 1.4 lens

Film speed : ISO 6 to 6400 with 1/3-EV settings ; flash control range :
ISO 12 to 1000 with 1/3-EV settings

AE lock : In P, A, S modes, depressing AE lock button holds metering and indication ; At H/S exposure setting, metering value is held and used for calculation as exposure value of H/S setting

Exposure adjustment : Up to ±4EV with 1/2-EV settings

Program : One of three programs (STANDARD, WIDE, TELE) is automatically set to match focal length of lens ;
Program is shiftable by shutter up/down control or aperture up/down control ; flash program is automatically set with exclusive flash

AUTOFOCUS

Type : TTL phase-detection type

Working : BV −3 to 14

Focus sensor : CCD image sensor

Indication : In-focus ; viewfinder LED and beeping sound with main switch ON •))
Unmeasurable ; viewfinder LED ▷◁ blinks

Focusing : Activated by touch switch, held with focus-in by depressing halfway operating button ; manual focusing possible by changing focus-mode switch to M

POWER

Battery : Two batteries are used from one of the following types :

Type	AM3	SUM3	NR-AA
*Number of film	60 rolls	20 rolls	30 rolls
36 EXP in AF mode			

※ : Number of film per set of batteries. As determined by Minolta's standard testing method.

Battery check : Auto check while exposing ; warning by viewfinder indication and body LCD.
All indication blink·····warning
All indication OFF·····battery exhaustion

Main switch : Three-step sliding switch with OFF, ON, •)) ; ON •)) for beeping indication when in-focus, self-timer operation

OTHER

Back cover : Interchangeable ; with grip, film window

DIMENSION & WEIGHT

Dimensions : 139mm(W) × 92mm(H) × 53mm(D)

Weight : 645g (without batteries)

2071 mechanism description contents

1. Electronic control system diagram ..... P. 1

2. Mechanical block description
   (1) Block diagram ..... P. 2
   (2) Block description ..... P. 3

3. Mechanical description
   (1) Operation cycle ..... P. 4
   (2) Mirror-up/-down mechanism ..... P. 4
   (3) Aperture control mechanism ..... P. 5
   (4) Winding, winding-stop reledse, multiple exposures mechanism ..... P. 6
   (5) Preview mechanism ..... P. 7

4. Principle of auto focusing (explanatory diagram)
   (1) Light path ..... P. 8
   (2) AF sensor ..... P. 8
   (3) Phase difference detection system ..... P. 9

5. Average-/spot-metering ..... P. 10

6. Summary of AF circuit ..... P. 11

7. Summary of body controlling circuit ..... P. 12

8. Function of encoder ..... P. 12

9. Function of switches
   (1) Position of switches ..... P. 13
   (2) Switches list ..... P. 14

1. Electronic control system

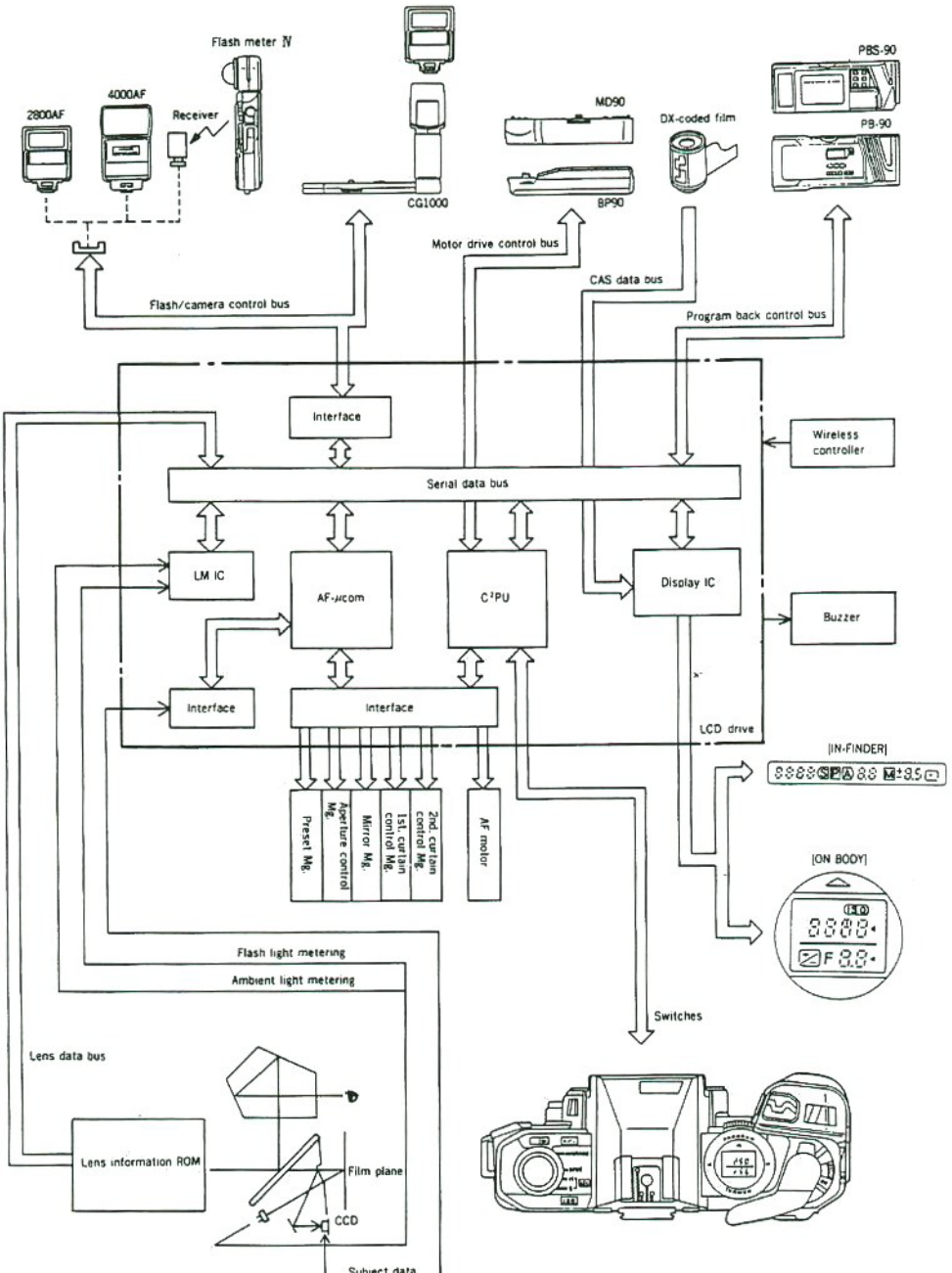

2. Mechanical block description

(1) Block diagram

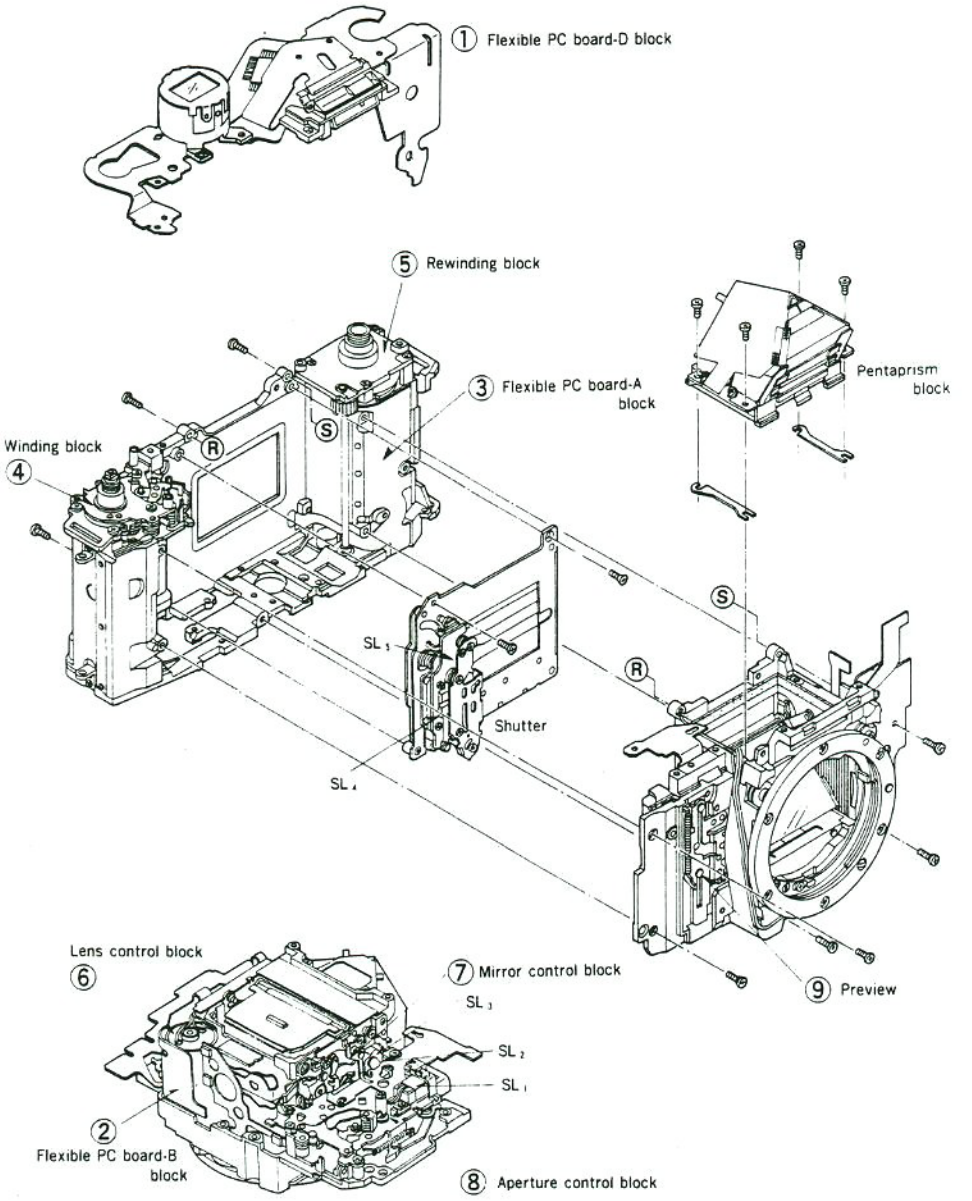

(2) Block description

① Flexible PC board-A block

Composed of $IC_{1,3,4}$. Controls metering, indication, exposure and then calculates the data, following program. Also controls timing of each IC operation.

② Flexible PC board-B block

- Composed of $IC_{2,6,7,8,9}$. Activates ambient-/flash-light metering, and also detects defocus amount to operate AF.
- Supplies power to AF motor.

③ Flexible PC board-D block

- Transmits data on film-speed of DX-coded film to flexible PC board-A.
- Has signal contacts to Program Back (including Super), Control Grip, Motor Drive.

④ Winding block

- By film advance lever, advances and winds film. And charges shutter, aperture, mirror.

⑤ Rewinding block

- Composed of rewinding fork, rewinding gears. Rewinds film.
- With MD-90 used, automatic rewind, being interlocked with rewinding coupler.

⑥ Lens control block

- Composed of AF motor, AF coupler, AF encoder, AF-drive gears.
- AF encoder monitors AF motor rotation (interlocked with lens shifting amount) and shifts lens interlocking with AF coupler.

⑦ Mirror control block

Composed of SL_3, mirror-up/-down lever.
Controls mirror (turns up/down).

⑧ Aperture control block

Composed of SL_1, SL_2, aperture encoder, aperture-ring interlocking gears.
During stop-down operation, aperture encoder monitors rotation amount of aperture ring, and completes stop-down with SL_2 separation.

⑨ Preview block

Separates SL_1 to control aperture when preview operation.

3. Mechanical description

(1) Operation cycle

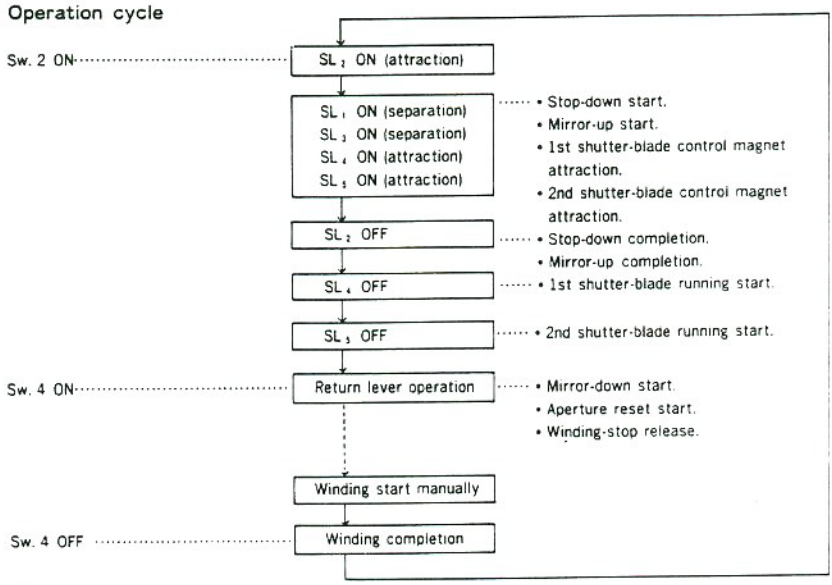

(2) Mirror-up/-down mechanism

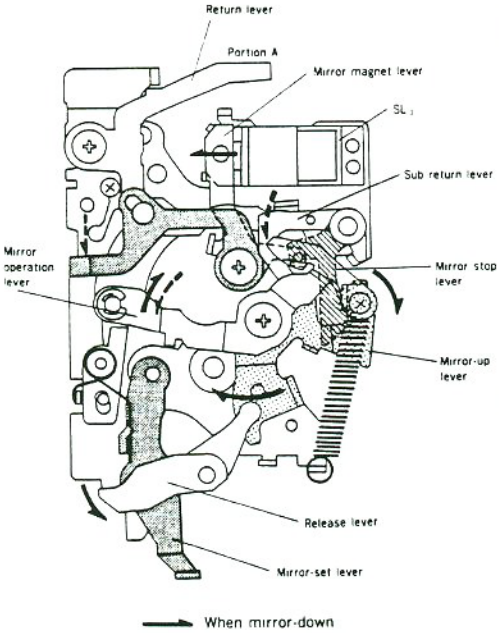

■ Operation when mirror-up

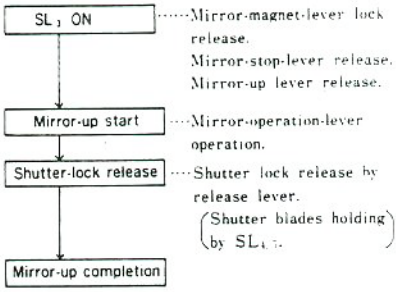

■ Operation when mirror-down

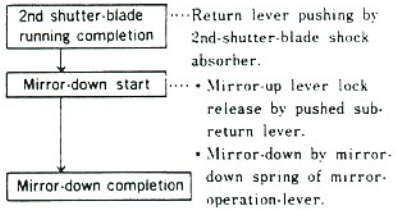

(3) Aperture control mechanism

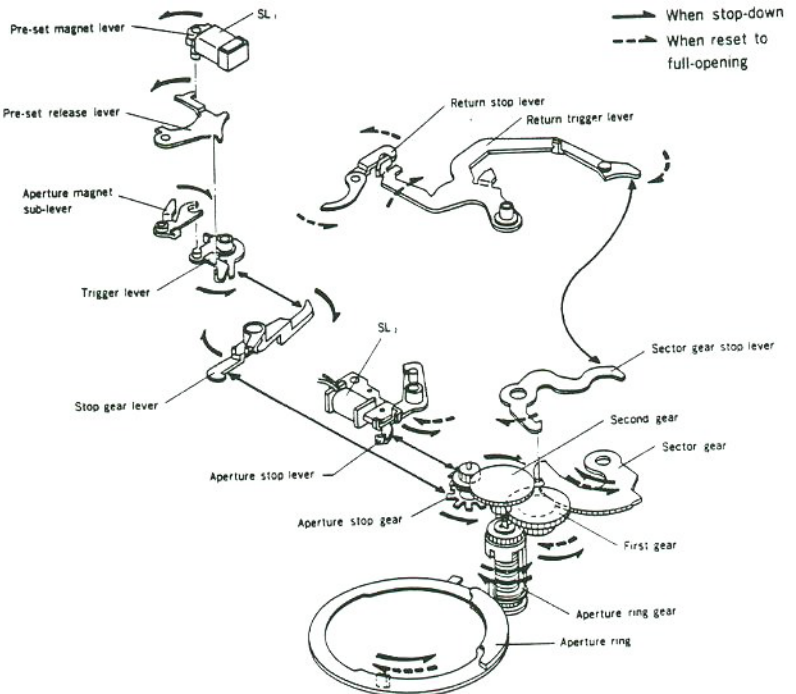

■ Operation when stop-down

SL₁ ON ……Pre-set magnet separation → Pre-set magnet lever release → Stop-gear-lever pushing by trigger lever → Aperture-stop-gear lock release → Sector rotation start. (Aperture magnet sub-lever functions to attract pre-set magnet just after separated.)

↓

Stop-down start ……Gears rotation in the order by sector gear:

First gear → Aperture ring gear → Aperture ring
First gear → Second gear → Aperture stop gear

↓

Aperture-stop-gear rotation, aperture pulse generation

↓

Aperture pulse count ……Pulse is counted corresponding to amount of setting aperture from full-opening. (1 stop = 8 teeth)

↓

Stop-down completion ……SL_2 separation → Aperture-stop-gear lock by aperture-stop-lever → Aperture-ring stop.

↓

Sw. Pv_2 ON ……See item "Preview." (p. 7)

■ Operation when resetting to full-opening

2nd shutter-blade running completion ……Return-stop-lever pushing by portion A of return lever (See p. 4) → Return-trigger-lever starts to activate.

↓

SL_2 reset ……Aperture-stop-lever pushing by return-trigger-lever → Aperture-stop-gear lock release → Sector-gear-stop-lever pushing by return-trigger-lever → Sector-gear-lock release.

↓

Aperture ring return ……Aperture-ring rotates in the direction of full-opening by spring strength of sector gear.

↓

Full-opening

(4) Winding, winding-stop release, multiple exposures mechanism

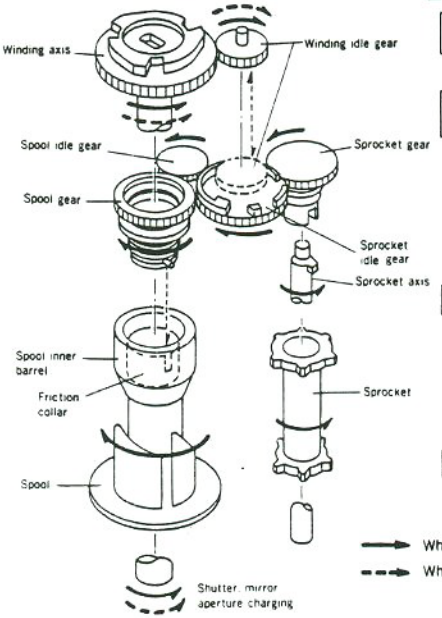

■ Operation when winding

- **Film advance lever operation** ····· Winding axis rotation in one way (counterclockwise) by one-way cam of winding axis.
- **Spool, sprocket rotation start** ····· Winding axis → Winding idle gear → Sprocket idle gear
  - → Spool idle gear → Spool gear → Friction collar → Spool inner barrel → Spool rotation
  - → Sprocket gear → Sprocket axis → Sprocket rotation
- **Sw. 4 OFF** ····· Winding-stop-release-lever engaging with winding-axis → Sw. 4 OFF → Shutter is ready to release. (When MD-90 in use, motor is stopped by Sw. 4 OFF signal and winding stop signal.)
- **Winding stop** ····· Winding stops by winding-stop-lever hitting with groove on winding-axis. (Shutter, mirror, aperture are charged by winding-axis rotation.)

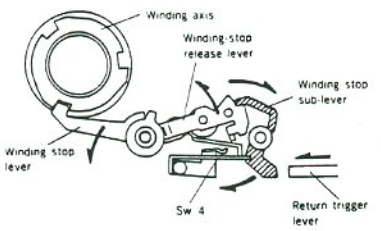

■ Operation when winding-stop release

- **2nd shutter-blade running completion** ····· Winding-stop sub-lever pushing by return trigger lever.
- **Winding axis lock release** ····· Winding-stop-lever release → Winding-stop release lever, disengaging from winding-axis by the spring strength.
- **Sw. 4 ON** ····· When MD-90 in use.... Motor rotation start by Sw. 4 ON signal. (For details, see mechanism description for MD-90.
- **Winding ready** ····· Continued on winding operation.

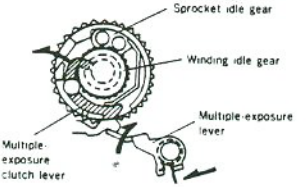

■ Operation when multiple exposures

- **Multiple-exposure button depressing** ····· Multiple-exposure clutch lever pushing by multiple-exposure lever.
- **Winding start with the button depressed** ····· Multiple-exposure clutch lever releasing from winding idle gear. Winding idle gear rotation with itself ; Sprocket idle gear non-rotation.
- **Spool, sprocket non-rotation** ····· Sprocket-idle-gear non-rotation → Sprocket-gear, spool-idle-gear non-rotation → Spool, sprocket non-rotation.
- **Shutter, mirror, aperture charge completion** ····· Shutter, mirror, aperture charging by winding-axis.

(5) Preview mechanism

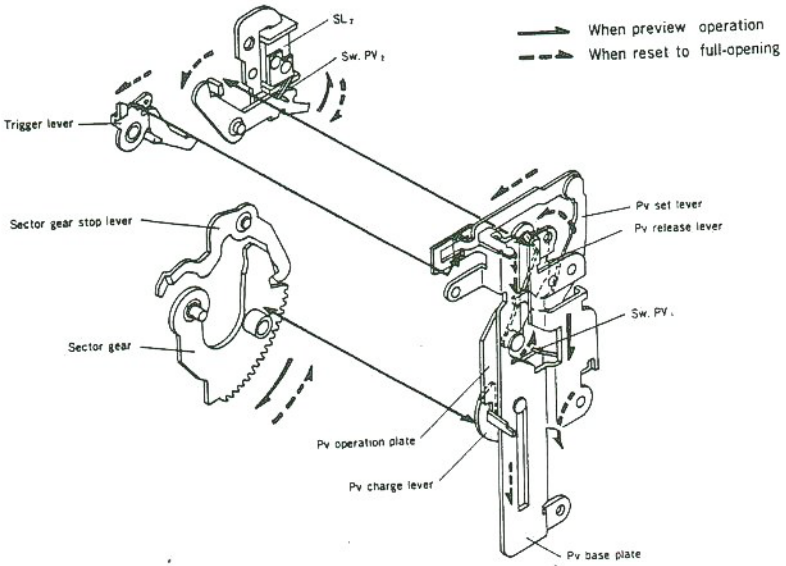

■ When preview operation (with winding completed)

- **Preview button pressing part way down** ..... Pv operation plate is pushed down, and stopped by Pv release lever (to have clicking).
- **Sw. Pv₁ ON** ..... See "Operation when stop-down" of (3) Aperture control mechanism on p. 3.
  Sw. Pv₁ ON → SL₁ separation.
  (→ Stop-down start. Aperture pulse counting up to setting aperture SL₂ OFF → Stop-down completion.)
  ※With Sw. Pv₁ ON, shutter is locked.
- **Sw. Pv₂ ON** ..... SL₂ OFF → Sw. Pv₂ ON → "F" blinking on body LCD to show stopped-down metering.
- **Sw. Pv₁ OFF (by releasing preview button)** ..... Shutter release-lock release.

■ Operation when canceling preview

- **Preview button pressing all the down** ..... Pv operation plate pushed down.
- **Gears disengaging** ..... Aperture-stop-lever is pressed by Pv release lever → Aperture-stop-gear disengaging.
- **Aperture resetting to full-opening** ..... Roller on sector gear is pressed by Pv charge lever → Sector-gear, sector-gear-stop-lever, setting in position → Aperture-ring resetting to full-opening.
- **Control-mechanism charging** ..... Trigger-lever pushing by Pv-set-lever → Aperture stop lever, control-mechanism charging.
- **Preview button releasing** ..... Continued on metering (Metering ON for 10 sec).

4. Principle of auto focusing

(1) Light path

The light from taking lens passes through main mirror (half mirror), reflects on sub mirror, and strikes on AF sensor.
AF sensor is composed with optical elements (IR cut filter, condenser lens, separating lens etc.) and CCD image sensor.

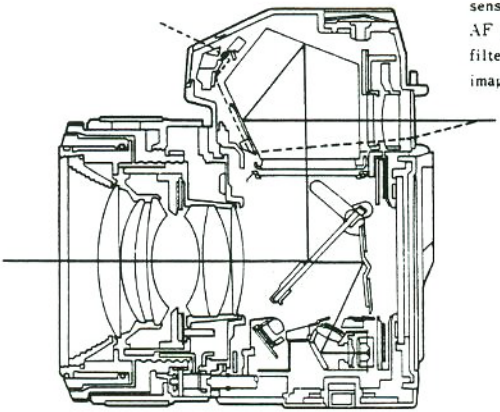

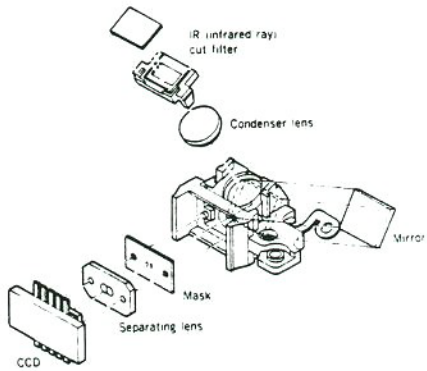

(2) AF sensor

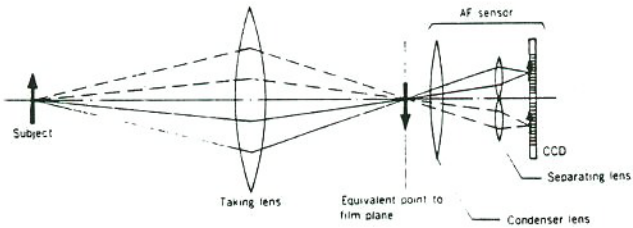

- Separating lens is composed with 2 extremely small lenses (lined side by side). The image, formed by taking lens, is separated into two images (in right and left) and formed on CCD image sensor by separating lens.
- CCD image sensor sequentially outputs electric charge of each picture element, as phase difference signal of 2 images, to IC_6 through IC_8.

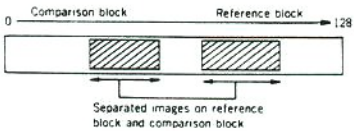

Phase differance detection system detects focusing state comparing positions of 2 images.
Comparison block is composed with more picture elements than reference block so that comparison block can detect focus amount and defocus direction.

(3) Phase difference detection system

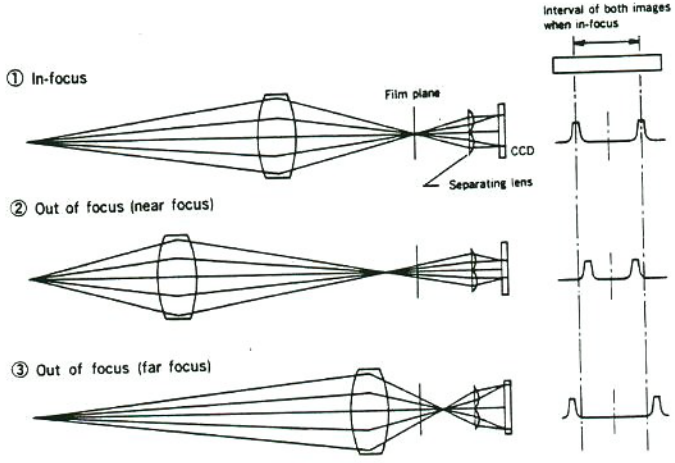

① In-focus

After light from taking lens is focused on specified position which corresponds to actual film plane. Light is separated into two images and formed on CCD image sensor by separating-lens.

② Out of focus (near focus)

In case that light is focused on front side of specified position, space in between 2 images becomes narrower than that of in-focus.

③ Out of focus (far focus)

In case that light is focused on rear side of specified position, space in between 2 images becomes wider than that of in-focus.

Comparison block is composed with more picture elements than that of reference block. AF circuit detects phase difference while shifting image on comparison block one by one, comparing image on reference block.

Since space in between 2 images at in-focus is specified, in-focus position and defocus amount can be calculated by image data on refernce block and comparison block.

5. Average-/Spot-metering

With 9000, center-weighted average metering and spot metering are selected by setting metering selector. For spot-metering, there are three readings:

1. Midtone reading.
2. Highlight reading (with AE lock button pressed).
3. Shadow reading (with AE lock button pressed).
   When AE lock button is pressed in H (highlight) or S (shadow) metering mode, exposure is adjusted to ensure greater exposure accuracy corresponding to metering mode setting.

● Light metering path

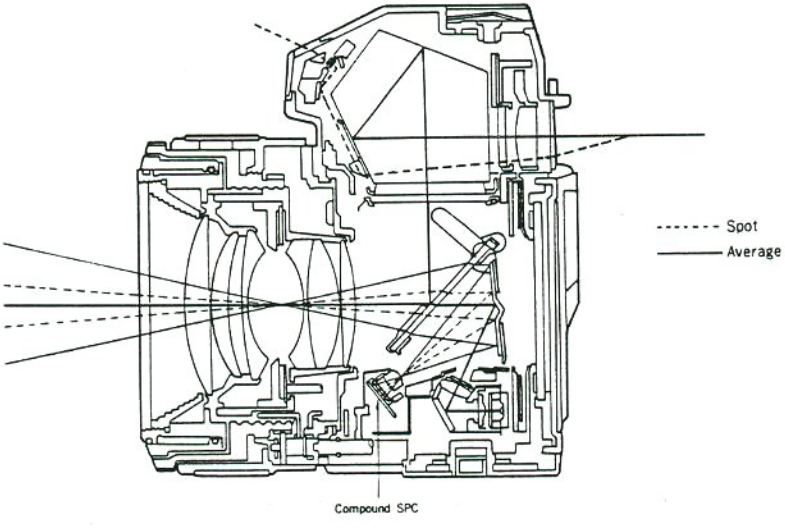

1. Metering sensor is located at the bottom of mirror box.
2. Metering sensor is compound SPC. When average metering, whole SPC is used. When spot metering, center portion of SPC is used to meter the portion of spot metering circle in viewfinder.

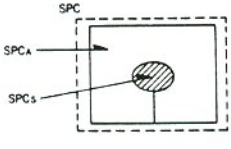

For average metering ·····SPCA+SPCS
For spot metering ·····SPCS

3. Metering area is changed over electrically.

6. Summary of AF circuit

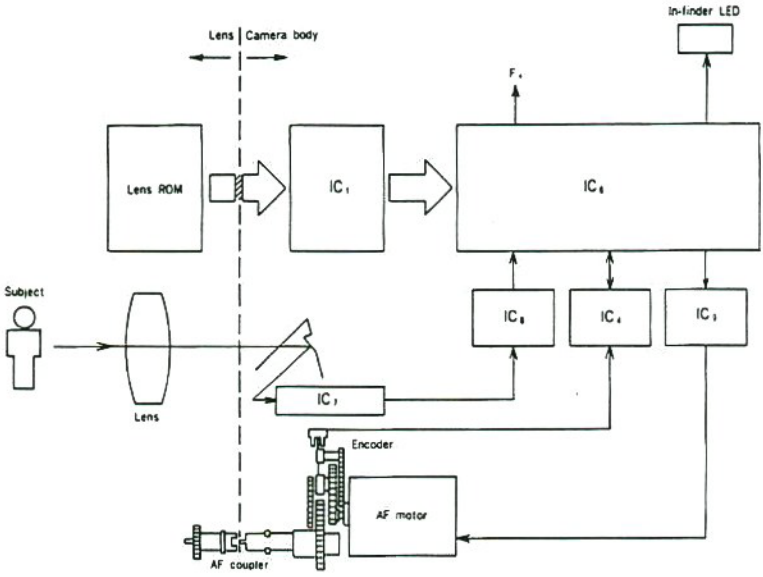

Auto focusing block is composed with three ICs (IC6, 7, 8).
IC6 detects signal from IC7 through IC8 corresponding to conditions of subject, and calculates in-focus direction and defocus amount simultaneous with detecting of lens-ROM-information through IC1.
AF motor running direction, running amount, running speed are calculated (selected) according to lens-ROM-information.

Running direction : determined by in-focus direction
Running amount : determined by pulse corresponding to defocus amount
Running speed* : selected corresponding to defocus amount
※ : Four speeds : No regulation, High speed, Low speed, Step

IC6 controls AF motor running, through IC8, monitors by encoder (photo interruptor).
AF motor running stops after required pulse, corresponding to IC6 calculation, is detected.
AF circuit discriminates whether in-focus or not.

- **Operation with exclusive flash mounted**

In case that defocus amount is not detected in low light condition, IC6 outputs H signal to F4 terminal (flash) → Flash projects AF-assist light → Camera detects light reflected from subject and detects defocus amount.

7. Summary of body controlling circuit

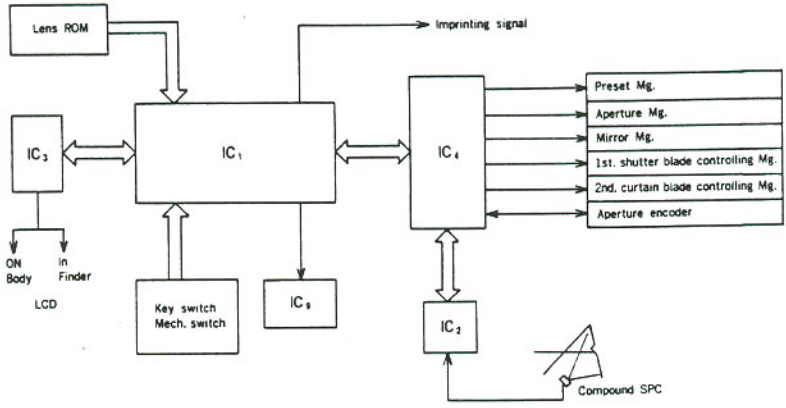

Metering switch ON → IC_1 starts to activate.
Ambient light metering is activated by compound SPC. BV data (A/D converted by IC_2) inputs to IC_1 through IC_4.
IC_1 calculates data corresponding to setting conditions (ISO, exposure mode, lens information, etc.), and displays calculations in LCDs through IC_3.
Release switch ON → Attraction of shutter magnets (for 1st and 2nd shutter blades) simultaneous with output of imprinting signal and separation of preset magnet to starts aperture stop-down activation.
Counts pulse generated by rotation of aperture slit plate corresponding to amount of setting aperture to control aperture.
Completion of pulse-count → Separation of preset magnet simultaneous with release of mirror magnet → Mirror starts to swing up.
Completion of mirror swinging up → Release of 1st shutter blade locking → Separation of 1st shutter blade controlling magnet → 1st shutter blade starts to travel.
IC_1 counts shutter speed → Completion of shutter speed counting.
Separation of 2nd shutter blade controlling magnet → 2nd shutter blade starts to travel (completion of shutter exposing) → Completion of 2nd shutter blade traveling → Aperture opens fully, mirror swings down and winding stopper releases.

8. Function of encoder

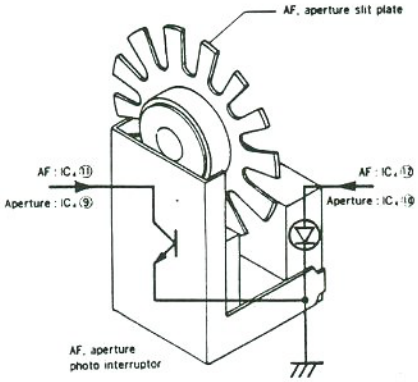

- **AF**
  Counts pulse generated by rotation of AF slit plate interlocking with M_2 rotation, monitors AF coupler rotation (lens shifting monitor)

- **Aperture**
  Counts pulse generated by rotation of aperture slit plate interlocking with stop-down operation, monitors shifting amount of aperture ring.

9. Function of switches

(1) Position of switches

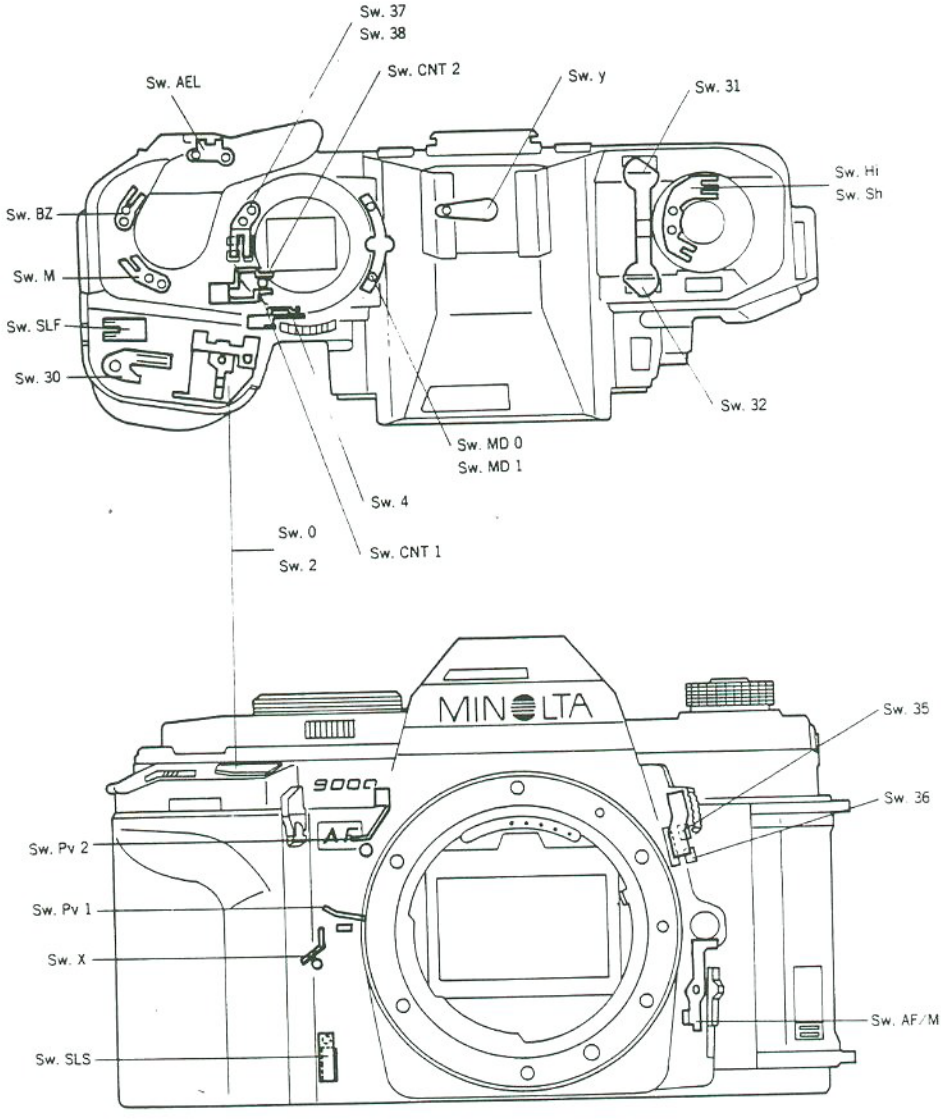

(2) Switches list

Mark	Name	Condition of operation
Sw. 0	Touch switch	ON by touching operating button Remains ON for 10 sec before shutter release
Sw. 1	Metering switch	ON by depressing operating button one step
Sw. 2	Release switch	ON by depressing operating button all the way
Sw. 4	Windingcompletion switch	OFF→ON with completion of shutter releasing ON→OFF with completion of winding
Sw. M	Main switch	By sliding main switch
Sw. Bz	Buzzer switch	By sliding main switch
Sw. SLS	Film detecting switch	OFF by pushing film detecting pin With film loaded OFF With no film loaded ON
Sw. AEL	AE lock switch	ON by depressing AE lock button
Sw. AF/M	Focus mode switch	By sliding focus mode switch ON in M mode, OFF in AF mode
Sw. SLF	Self-timer switch	By sliding self-timer switch
Sw. X	Sync switch	ON with completion of 1st shutter blade traveling OFF with completion of 2nd shutter blade traveling
Sw. Y	Electric-shock prevention switch	ON by attaching, flash, OFF by removing flash
Sw. MD 0 Sw. MD 1	Exposure mode switch	By setting exposure mode selector P: Sw.MD 0 H, Sw.MD 1 H A: Sw.MD 0 L, Sw.MD 1 H M: Sw.MD 0 L, Sw.MD 1 L S: Sw.MD 0 H, Sw.MD 1 L
Sw. Hi Sw. Sh	Metering mode switch	By setting metering selector AVERAGE: Sw. Hi H, Sw. Sh H SPOT: Sw. Hi L, Sw. Sh H H: Sw. Hi L, Sw. Sh L S: Sw. Hi H, Sw. Sh L
Sw. CNT 1	Counter switch 1	Interlocked with counter operation lever
Sw. CNT 2	Counter switch 2	Interlocked with counter operation lever
Sw. Pv 1	Preview switch 1	OFF→ON by pressing preview button ON→OFF by releasing preview button
Sw. Pv 2	Preview switch 2	OFF→ON by SL ; OFF
Sw. 30	Battery switch	ON→OFF by attaching battery holder
Sw. 31	ISO key switch	Indication, corresponding to the key in use, is displayed by the key ON, and continues for 10 sec after the key OFF
Sw. 32	−/− key switch	
Sw. 35	F stop-up lever	• In P, A, S modes With up lever pressed : shutter speed faster, aperture (lens opening) larger. With down lever pressed : shutter speed slower, aperture (lens opening) smaller. • When the lever is held down, value changes rapidly. Each time the lever is pressed, the value changes by one stop.
Sw. 36	F stop-down lever	
Sw. 37	Shutter speed down lever	
Sw. 38	Shutter speed up lever	

SERVICE MANUAL SUPPLEMENTARY INFORMATION

Model **9000, α9000, MAXXUM 9000**

Code No. **2071-200, -400, -600**

■ Modification of 2071 body for 8752 (100 EXPOSURE BACK EB-90) attaching

■ Parts modification for 8752 (100 EXPOSURE BACK EB-90) attaching.

- When user brings the camera to service facility for proper engagement with EB-90, take the following servicing-measures.

2071 body		Servicing measures
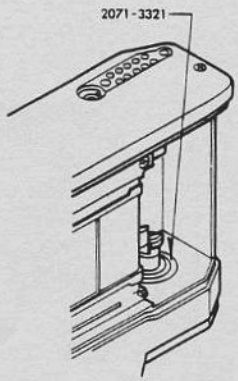	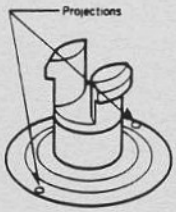	Replace Type A of "■ Modified parts [1]" by Type B.
		Replace Type A of "■ Modified parts [1] & [2]" by Type B.

✣This information should be filed additionally to Service Manual.

■Modified parts

〔1〕

Type A	Type B
2071-1024-03 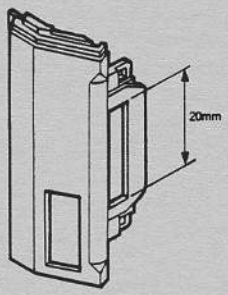	2071-1024-04 Side cover サイドカバー 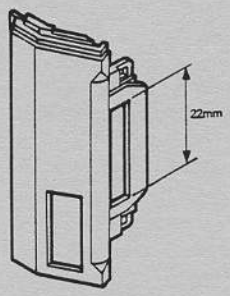
2071-1030-02 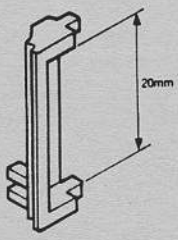	2071-1030-04 Lock cover ロックカバー 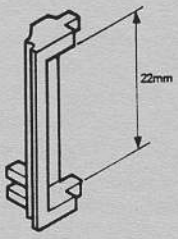

- When user brings the camera for proper engagement with EB-90.
  REPLACE Type A by Type B without fail.
- When Type B parts of 〔2〕 are used.
  You may replace Type A by Type B.
- NEVER replace Type B parts by Type A.

〔2〕

Type A	Type B
2071-1025-01	2071-1025-02 Strap eyelet cover-A　吊環カバーA
2072-1109-02	2072-0112-01 Lock lever set　ロックレバーセット
2071-3321-01	2071-3321-03 Collar　巻戻し軸カラー
Not used	9384-2391-30 Acetate tape　アセテートクロステープ 9mm×4mm

- Type A is replaceable by Type B.
  (When 3321 is replaced by Type B, REPLACE the others by Type B, also.)
- NEVER replace Type B parts by Type A.
- When Type A parts of [1] are replaced by Type B, REPLACE Type A parts of [2] by Type B.
- Type B parts will be supplied after Type A parts run out.

I N D E X

Part No.	Page
2071-0105	3
2071-0107	2
2071-0109	1
2071-0110	3
2071-0114	4
2071-0116	8
2071-0118	2
2071-0119	1
2071-0132	2
2071-0136	2
2006-0140	3
2071-0149	4
2071-0150	8
2071-0151	2
2072-0152	8
2071-0154	8
2071-0155	4
2072-0157	8
2071-0160	1
2071-0163	13
2071-0190	1
2071-0191	4
2071-0202	5
2071-0203	12
2071-0212	2
2071-0214	12
2071-0223	12
2071-0225	2
2071-0231	12
2071-0241	8
2071-0245	8
2071-0246	12
2071-0247	12
2071-0250	12
2071-0253	12
2071-0255	12
2071-0260	7
2071-0283	7
2071-0304	10
2071-0306	5
2071-0307	10
2071-0311	9
2071-0312	9
2071-0313	10
2071-0316	9
2071-0323	10
2071-0324	10
2071-0332	10
2071-0334	11
2071-0335	1
2071-0336	1
2071-0338	4
2071-0342	9
2071-0343	4
2071-0344	10
2071-0348	10
2071-0353	10
2071-0368	4
2071-0370	4
2071-0374	10
2071-0382	9
2071-0390	5
2071-0398	5
2071-0401	13, 14
2071-0402	13, 15
2071-0413	4
2071-0422	11
2071-0424	4
2071-0426	4
2071-0427	7
2071-0429	4
2071-0430	13
2071-0450	11
2071-0504	6
2071-0531	13
2071-0540	4
2071-0556	13
2071-0581	13
2071-0583	6
2071-1008	1
2072-1010	8
2072-1011	8

I N D E X

Part No.	Page
2071-1012	9
2071-1017	11
2071-1023	1
2071-1024	1
2071-1025	1
2071-1026	1
2071-1027	1
2071-1028	11
2071-1030	4
2072-1030	1
2071-1031	11
2072-1031	1
2071-1032	2
2071-1033	2
2071-1034	2
2071-1036	2
2071-1037	1
2071-1038	1
2071-1039	2
2071-1040	2
2071-1041	11
2071-1042	11
2071-1043	11
2071-1044	5
2071-1045	5
2071-1052	2
2072-1053	2
2072-1054	2
2071-1056	2

Part No.	Page
2071-1059	2
2071-1060	2
2005-1061	8
2071-1061	2
2005-1062	8
2071-1062	13
2005-1063	8
2071-1066	11
2071-1067	11
2071-1070	1
2071-1074	11
2071-1077	3
2071-1078	3
2071-1079	3
2071-1085	1
2071-1086	4
2071-1105	9
2071-1106	3
2006-1108	3
2071-1109	11
2071-1112	11
2071-1114	3
2071-1118	3
2071-1119	3
2071-1122	11
2024-1344	1
2071-1352	2

Part No.	Page
2072-1515	8
2072-1516	8
2072-1519	8
2072-1520	8
2071-1523	8
2071-1524	8
2071-1525	3
2071-1528	3
2071-1529	8
2071-2014	2
2071-2015	2
2071-2016	2
2071-2017	2
2071-2018	4
2071-2019	2
2071-2022	2
2071-2024	2
2071-2031	13
2071-2038	3
2071-2039	3
2071-2040	3
2071-2041	3
2071-2042	3
2071-2043	3
2071-2464	12
2071-2474	8

I N D E X

Part No.	Page
2071-2477	8
2071-2482	8
2071-2483	8
2072-2505	8
2071-2509	12
2071-2517	12
2071-2536	12
2071-2541	12
2071-2543	12
2071-2551	12
2071-2552	12
2071-2557	12
2071-3001	1
2071-3002	1
2071-3003	10
2071-3006	10
2071-3010	5
2071-3012	10
2071-3017	10
2071-3018	10
2071-3019	10
2071-3020	10
2071-3021	10
2071-3022	10
2071-3036	9
2071-3037	9
2071-3038	9
2071-3039	9
2071-3040	1
2071-3043	9
2071-3047	10
2071-3049	10
2071-3050	10
2071-3054	10
2071-3055	10
2071-3065	10
2071-3066	1
2071-3067	1
2071-3072	2
2071-3075	10
2071-3077	2
2071-3089	5
2071-3091	5
2071-3097	5
2071-3100	5
2071-3101	5
2071-3105	5
2071-3109	5
2071-3110	9
2071-3114	9
2071-3119	5
2071-3120	5
2071-3125	2
2071-3128	1
2071-3136	5
2071-3301	11
2071-3303	11
2071-3305	11
2071-3316	1
2071-3317	1
2071-3318	1
2071-3319	1
2071-3320	1
2071-3321	11
2071-3322	11
2071-3324	1
2071-3327	2
2071-3332	2
2071-3333	2
2071-3334	11
2071-3336	4
2071-3401	4
2071-3402	4
2071-3405	4
2071-3428	4
2071-4203	7
2071-4204	13
2071-4205	4
2071-4210	4
2071-4226	12
2072-4244	12
2071-4245	13
2071-4246	13

I N D E X

Part No.	Page
2071-4248	13
2071-4249	4
2071-4250	4
2071-4253	4
2071-4265	4
2072-4270	13
2071-5005	6
2071-5006	6
2072-5009	6
2071-5010	6
2071-5011	6
2071-5012	8
2071-5013	8
2071-5014	8
2071-5016	6
2071-5017	6
2071-5039	7
2071-5043	4
2071-5046	2
2071-5047	2
2072-5051	13
2072-5052	13
2071-5054	13
2071-5061	5
2071-5062	5
2071-5063	5
2071-5064	5
2071-5065	5
2072-5072	13

Part No.	Page
2072-5073	13
2072-5074	13
2072-5077	4
2071-5091	13
2071-5092	13
2071-5093	13
2071-5154	6
2071-5167	8
2071-5181	8
2071-5805	6
2071-5806	8
2072-5813	13
2072-5814	13
2072-5815	13
2017-9001	4
2071-9001	5
2072-9002	8
2071-9004	10
2071-9007	4
2071-9107	1
2071-9108	11
2006-9109	3
2071-9110	5
2071-9111	5
2071-9112	9

Part No.	Page
2071-9113	9
2072-9113	4
2071-9115	12
2071-9119	4
2071-9120	11
2072-9120	4
2071-9122	7
2071-9125	2
2071-9126	1
2071-9127	1
2006-9128	4,7,10
2071-9128	1
2071-9129	1
2071-9130	2
2071-9131	9
0059-9179	2
2071-9402	5
2071-9403	5
2071-9404	10
2071-9415	12
2071-9426	4
9353-2642-02	4
9361-1364-04	14
9361-1364-05	14
9361-1364-06	14
9361-1461-03	14

I N D E X

Part No.	Page
9361-1462-01	15
9361-1462-02	14
9361-1463-01	15
9361-1463-04	14
9361-1465-01	14
9362-1032-01	14
9362-1032-02	14
9362-1032-03	14
9362-1032-04	14
9362-1461-01	14
9362-1461-02	14
9362-1461-03	14
9362-1464-01	14
9362-1464-02	14
9362-1464-03	14
9362-1633-01	14
9362-1633-02	14
9362-1633-03	14
9362-1633-04	14
9362-2361-02	15
9362-2361-03	15
9362-2361-04	15
9362-2461-01	15
9362-2462-01	15
9362-2462-02	15
9362-2462-03	15
9363-1033-01	15
9363-1033-02	15
9363-1033-03	15
9363-1033-04	15
9363-1363-01	15
9363-1363-02	15
9363-1461-01	15
9363-1461-02	15
9363-1461-03	15
9363-1461-04	15
9363-1461-05	15
9363-1463-02	15
9363-1463-03	15
9363-1464-02	15
9363-1464-03	15
9363-2361-02	15
9363-2361-03	15
9364-4461-01	15
9364-4461-02	15
9372-2462-01	15
9373-4161-02	14
9373-4162-01	14
9373-4163-01	14
9373-4461-01	14
9384-2190-50	1,4,5,6,7,13
9384-2391-30	4,11
9384-2491-10	13
9384-2590-50	14
9391-0807-00	16
9391-0807-01	16
9391-0807-02	16
9391-0807-03	16
9391-0807-04	16
9391-0807-05	16
9391-0807-06	16
9391-0807-07	16
9391-0807-08	16
9391-0807-09	16
9391-1807-00	16
9391-1807-02	16
9431-1016-62	8
9431-1026-62	8,15
9431-1036-62	14,15
9431-1046-62	15
9431-1056-62	14,15
9431-1536-62	14
9431-1826-62	15
9431-2036-62	15
9431-2046-62	15
9431-2226-62	14,15
9431-2236-62	14,15
9431-2246-62	15
9431-2435-61	14

I N D E X

Part No.	Page
9431-2436-62	15
9431-2735-61	14
9431-2736-62	15
9431-2746-62	15
9431-3035-61	14
9431-3316-62	8
9431-3335-61	14
9431-3336-62	14,15
9431-3346-62	15
9431-3635-61	14
9431-3906-62	15
9431-3935-61	14
9431-3936-62	15
9431-3946-62	15
9431-4335-61	14
9431-4735-61	14
9431-5135-61	14
9431-5136-62	14,15
9431-5635-61	14
9431-6235-61	14
9431-6826-62	14,15
9431-6835-61	14
9431-6836-62	14,15
9431-6846-62	14
9431-8236-62	15
9432-1016-65	15
9432-1026-63	15
9432-1036-63	14,15
9432-1046-63	15
9432-1056-63	14,15
9432-1068-61	14
9432-1536-63	14
9432-1826-63	15
9432-2036-63	15
9432-2046-63	15
9432-2068-61	14
9432-2226-63	14,15
9432-2236-63	14,15
9432-2246-63	15
9432-2435-63	14
9432-2436-63	15
9432-2735-63	14
9432-2736-63	15
9432-2746-63	15
9432-3035-63	14
9432-3335-63	14
9432-3336-63	14,15
9432-3346-63	15
9432-3635-63	14
9432-3906-63	15
9432-3935-63	14
9432-3936-63	15
9432-3946-63	15
9432-4335-63	14
9432-4735-63	14
9432-5135-63	14
9432-5136-63	14,15
9432-5635-63	14
9432-6235-63	14
9432-6826-63	14,15
9432-6835-63	14
9432-6836-63	14,15
9432-6846-63	14
9432-8236-62	15
9472-1039-63	15
9472-2239-63	15
9472-3339-63	12
9472-3339-64	15
9531-2255-70	15
9532-2255-67	15
9533-1055-67	15
9533-4745-65	15
9534-4745-68	15
9534-4745-69	15
9564-1035-69	14,15
9564-1048-63	14,15
9564-2204-65	14
9564-3325-69	14
9564-3335-65	14
9564-3348-66	14

I N D E X

Part No.	Page
9565-1025-37	14
9565-1035-37	14,15
9565-1044-64	14
9565-1235-37	15
9565-2215-37	14
9565-3315-64	14
9565-3325-37	14,15
9565-4715-37	14
9565-4715-64	14
9565-4738-67	12
9565-6815-64	14
9565-6825-37	15
9611-1425-07	12
9611-1616-07	4
9611-1620-09	4,7
9611-1625-01	4,7
9611-1630-09	1,7
9611-1640-01	8
9611-1640-07	1,4,11
9611-2030-07	4
9611-2040-01	5
9611-2040-04	8
9611-2040-09	5
9612-1425-07	11
9612-1618-07	4,7
9612-1620-07	8
9612-1625-01	11
9612-1625-07	4,9,10
9612-1630-07	1,4,5,8 11
9612-1635-07	7,9,11
9612-1640-04	11
9612-1640-07	1
9612-1655-07	4,8
9612-2035-07	4,5,11
9612-2055-07	5,9
9613-1660-07	4
9615-1628-01	9
9615-1635-06	1
9615-2040-07	4
9721-0120-13	7,8,11 12
9721-0150-13	10
9761-1725-07	2
9761-1735-07	13,2
9761-1745-07	1,2
9761-1770-07	2
9762-1630-01	3
9762-1730-07	2
9762-1740-07	4
9762-1755-07	1
9766-1750-07	1
9790-2140-40	13
9790-7293-43	9
9791-1020-40	12
9791-1225-50	12
9791-2140-40	13
9791-2345-42	10
9792-1020-40	12
9792-2140-40	13
9793-1840-86	12
9793-2140-40	13
9795-1837-40	13
9795-3155-87	2

9000 (2071-200)
α 9000 (2071-400)
MAXXUM 9000 (2071-600)

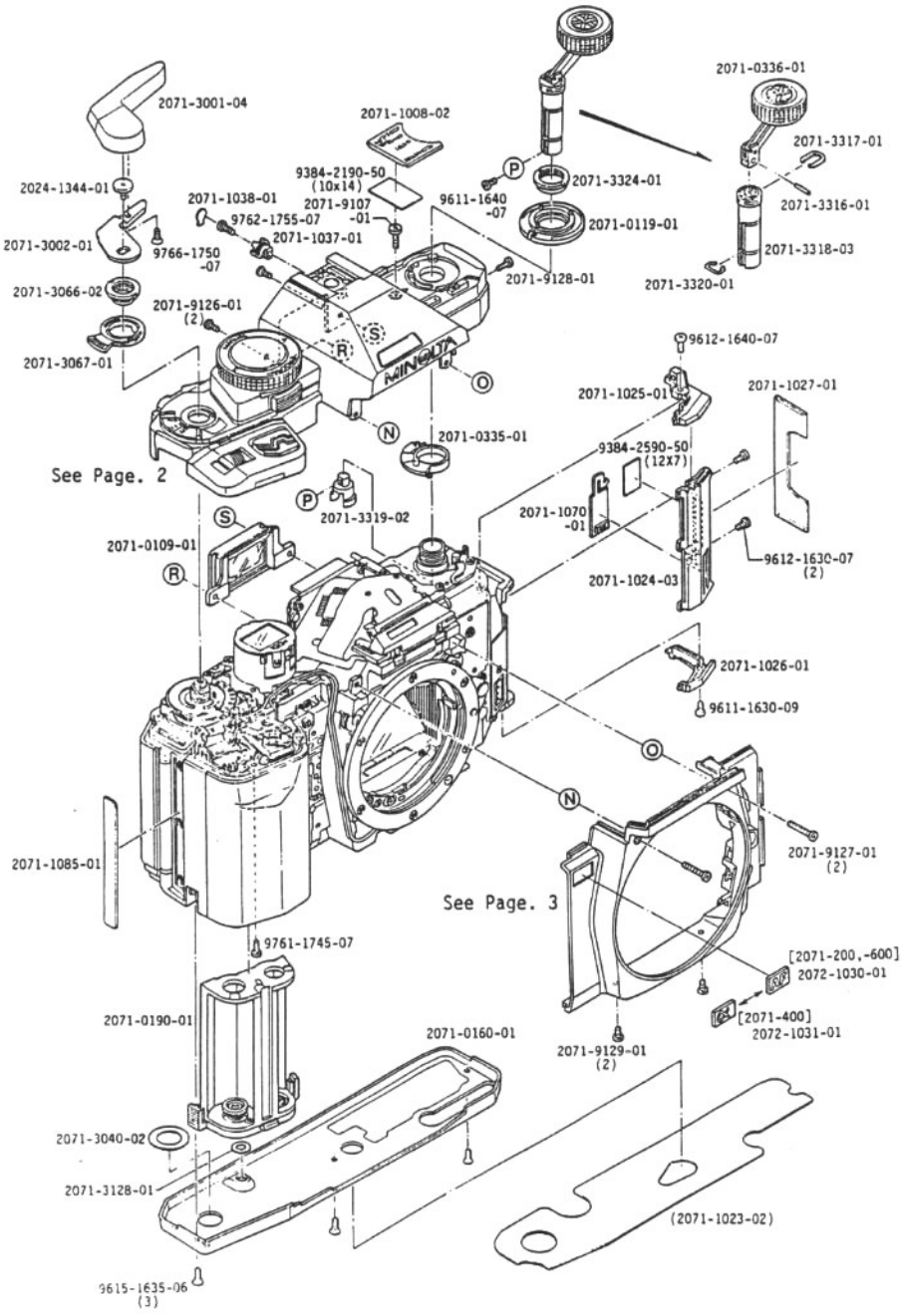

Part No.	Part Name		Qty.
2071-0109-01	Eyepiece frame set	接眼枠セット	1
2071-0119-01	Metering selector dial set	測光モード指標セット	1
2071-0160-01	Bottom cover set	下カバーセッド	1
(2071-1023-02)	Bottom cover sheet	下カバー保護セット	1
2071-0190-01	Battery holder set	電池ホルダーセット	1
2071-0335-01	Metering selector switch set	測光モード切換SWセット	1
2071-0336-01	Rewind crank set	巻戻しノブセット	1
2071-1008-02	Metering selector plate	測光モード銘板	1
2071-1024-03	Side cover	サイドカバー	1
2071-1025-01	Strap eyelet cover-A	吊環カバーA	1
2071-1026-01	Strap eyelet cover-B	吊環カバーB	1
2071-1027-01	Side cover plate	サイドカバー化粧板	1
2072-1030-01	AF name plate(for-200,-600)	AF銘板	1
2072-1031-01	α name plate(for-400)	α銘板	1
2071-1037-01	Eyepiece adjustment dial	視度調ダイヤル	1
2071-1038-01	Eyepiece adjustment plate	視度調銘板	1
2071-1070-01	Remote-control cover	リモコンホルダー開閉蓋	1
2071-1085-01	Screw cover	グリップ止めビスカバー	1
2024-1344-01	Winding lever pressure	巻上レバー押えビス	1
2071-3001-04	Film advance lever knob	巻上レバー指当	1
2071-3002-01	Film advance lever	巻上レバー	1
2071-3040-02	Light shield washer	チャージカプラー遮光ワッシャー	1
2071-3066-02	Top cover pressure	上カバー押え	1
2071-3067-01	Main switch lever	メインスイッチ操作レバー	1
2071-3128-01	Light shield washer	R釦遮光ワッシャー	1
2071-3316-01	Guide pin	ガイド棒	1
2071-3317-01	Stopper	ピストンストッパー	1
2071-3318-03	Rewind axis	巻戻し軸	1
2071-3319-02	Rewind fork	巻戻しフォーク	1
2071-3320-01	Click spring	クリックSP	1

Part No.	Part Name		Qty.
2071-3324-01	Pressure nut	押えナット	1
2071-9107-01	Screw	止めねじ	1
2071-9126-01	Screw	止めねじ	2
2071-9127-01	Screw	止めねじ	2
2071-9128-01	Screw	止めねじ	1
2071-9129-01	Screw	止めねじ	2
9384-2190-50	Double-faced tape(Per roll)	両面テープ	1
9384-2590-50	Mending tape(per roll)	メンディングテープ	1
9611-1630-09	Phillips type screw	十字穴付なべ小ねじ	1
9611-1640-07	Phillips type screw	十字穴付なべ小ねじ	1
9612-1630-07	Phillips type screw	十字穴付なべ小ねじ	2
9612-1640-07	Phillips type screw	十字穴付なべ小ねじ	1
9615-1635-06	Phillips type screw	十字穴付皿小ねじ	3
9761-1745-07	Tap tite screw	十字穴付タップタイトねじ	1
9762-1755-07	Tap tite screw	十字穴付タップタイトねじ	1
9766-1750-07	Tap tite screw	十字穴付タップタイトねじ	1

9000 (2071-200)
α 9000 (2071-400)
MAXXUM 9000 (2071-600)

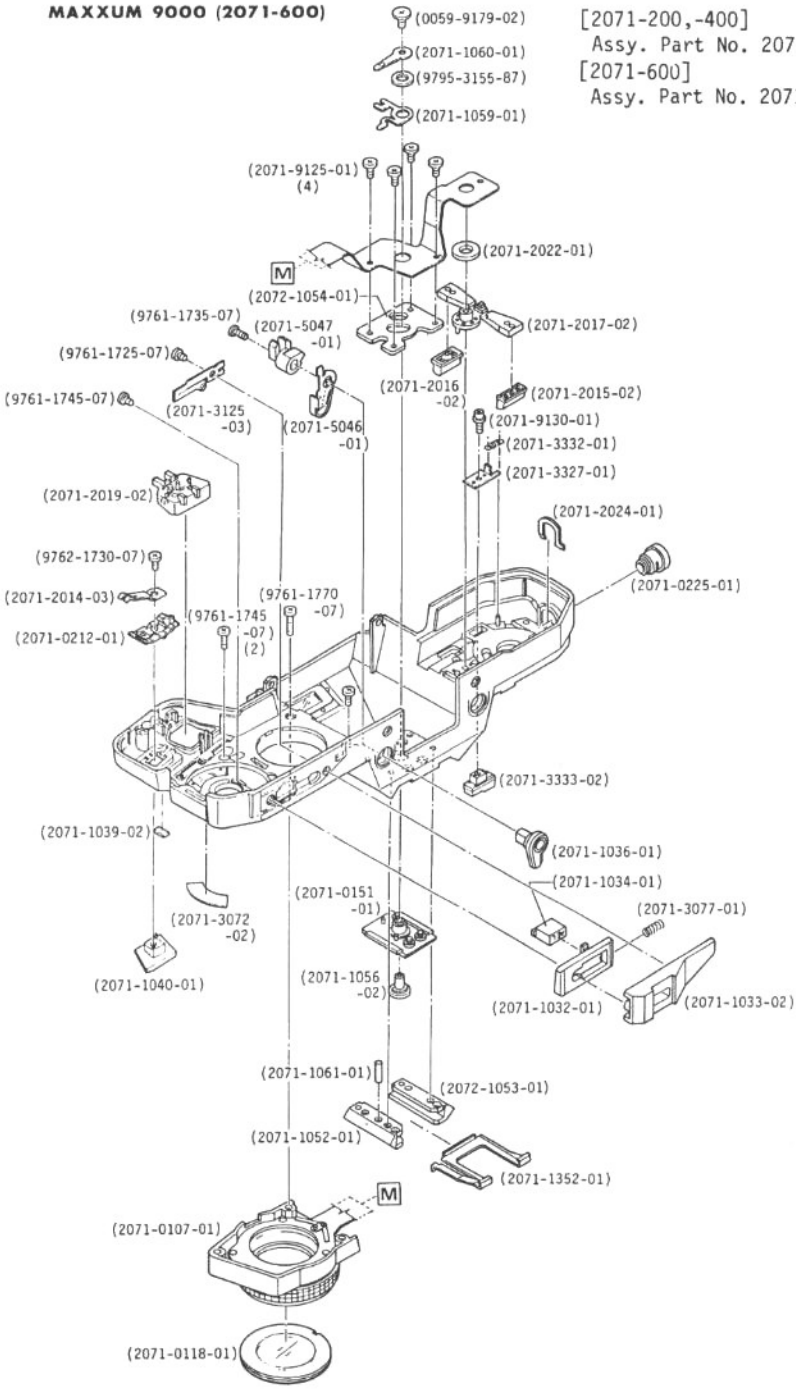

[2071-200,-400]
Assy. Part No. 2071-0132
[2071-600]
Assy. Part No. 2071-0136-01

Part No.	Part Name		Qty.
2071-0132-01	Top cover set(for 9000 & α9000)	上カバーセット	1
2071-0136-01	Top cover set(for MAXXUM9000)	上カバーセット	1
(2071-0107-01)	Exporsure mode selector set	撮影モードダイヤルセット	1
(2071-0118-01)	Data window set	液晶表示窓セット	1
(2071-0151-01)	Acc.shoe base set	アクセサリーシュー座セット	1
(2071-0212-01)	Click plate set	セルフクリックバネ	1
(2071-0225-01)	Sync.terminal	シンクロターミナル	1
(2071-1032-01)	Multiple-exporsure button	多重露光ボタン	1
(2071-1033-02)	AE lock cover	ＡＥロックカバー	1
(2071-1034-01)	AE lock button	ＡＥロック釦	1
(2071-1036-01)	Eyepiece shutter lever	アイピースシャッター	1
(2071-1039-02)	Self-timer plate	セルフ銘板	1
(2071-1040-01)	Self-timer lever	セルフ操作レバー	1
(2071-1052-01)	Acc.shoe(Right)	アクセサリーシュー右	1
(2072-1053-01)	Acc.shoe(Left)	アクセサリーシュー左	1
(2072-1054-01)	Acc.shoe set plate	アクセサリーシュー取付板	1
(2071-1056-02)	Contact-A	コンタクト接片Ａ	1
(2071-1059-01)	Contact plate-A	スイッチ接片Ａ	1
(2071-1060-01)	Contact plate-B	スイッチ接片Ｂ	1
(2071-1061-01)	Pin	安全スイッチピン	1
(2071-1352-01)	Acc.shoe spring	アクセサリーシューバネ	1
(2071-2014-03)	Self-timer switch	セルフ設定ブラシ	1
(2071-2015-02)	Film-speed key	ＩＳＯキー	1
(2071-2016-02)	Exporsure adjustment key	露出補正キー	1
(2071-2017-02)	Key plate	キー釦取付板	1
(2071-2019-02)	Operating button	シャッターボタン	1
(2071-2022-01)	Spacer	コネクター押えゴム	1
(2071-2024-01)	Sync. terminal set plate	シンクロターミナル止め板	1
(2071-3072-02)	Main switch plate	メインＳＷ銘板	1
(2071-3077-01)	Multiple-exporsure spring	多重露光ＳＰ	1
(2071-3125-03)	AE lock spring	ＡＥロック釦押えバネ	1
(2071-3327-01)	Lock release lever	ロック解除レバー支持板	1
(2071-3332-01)	Lock release lever spring	ロック解除レバーＳＰ	1
(2071-3333-02)	Lock release button	ロック解除レバー	1
(2071-5046-01)	Eyepiece shutter click plate	アイシャッタークリックバネ	1
(2071-5047-01)	Eyepiece shutter sub lever	アイシャッター駆動レバー	1
(2071-9125-01)	Screw	止めねじ	4
(2071-9130-01)	Screw	止めねじ	1
(0059-9179-02)	Accessory shoe contact screw	コンタクト接片押えビス	1
(9761-1725-07)	Tap tite screw	十字穴付タップタイトねじ	1
(9761-1745-07)	Tap tite screw	十字穴付タップタイトねじ	3
(9761-1770-07)	Tap tite screw	十字穴付タップタイトねじ	1
(9762-1730-07)	Tap tite screw	十字穴付タップタイトねじ	1
(9761-1735-07)	Tap tite screw	十字穴付タップタイトねじ	1
(9795-3155-87)	Washer	薄ワッシャー	1

9000 (2071-200)
α 9000 (2071-400)
MAXXUM 9000 (2071-600)

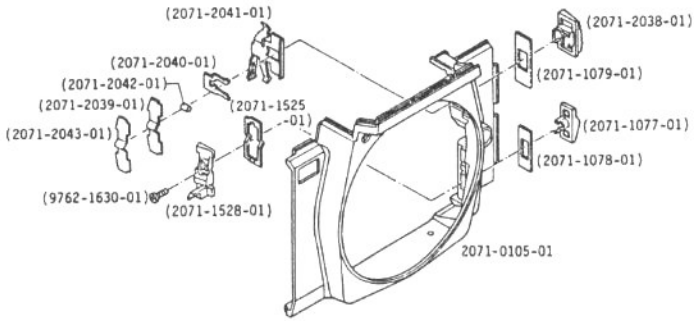

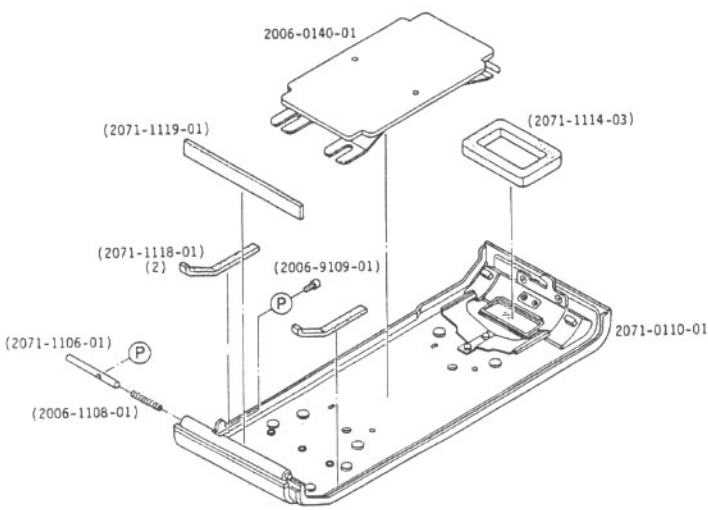

Part No.	Part Name		Qty.
2071-0105-01	Front cover set	前カバーセット	1
(2071-1077-01)	Focus mode switch	フォーカスモードSW	1
(2071-1078-01)	Focus mode plate	A－H　銘板	1
(2071-1079-01)	Aperture up/down plate	AV　銘板	1
(2071-1525-01)	Focus mode click spring	A－Mクリックバネ	1
(2071-1528-01)	Focus mode click plate	A－Mクリックバネ	1
(2071-2038-01)	Aperture up/down lever	側部アップダウンレバー	1
(2071-2039-01)	AV switch pressure plate-A	AV駆動板バネA	1
(2071-2040-01)	AV click plate	AVレバークリックバネ	1
(2071-2041-01)	AV switch	AV接片	1
(2071-2042-01)	AV roller	AVローラー	1
(2071-2043-01)	AV switch pressure plate-B	AV駆動板バネB	1
(9762-1630-01)	Screw	止めねじ	1
2071-0110-01	Back cover set	裏蓋セット	1
(2071-1106-01)	Hinge axis-A	ヒンジ軸上	1
(2006-1108-01)	Hinge spring	ヒンジ軸SP	1
(2071-1114-03)	Light shield sponge	パト窓遮光片	1
(2071-1118-01)	Light shield sponge-A	裏蓋遮光片A	2
(2071-1119-01)	Light shield sponge-B	裏蓋遮光片B	1
(2006-9109-01)	Hinge axis-A set screw	裏蓋ヒンジ軸止めねじ	1
2006-0140-03	Pressure plate set	圧着板セット	1

9000 (2071-200)
α 9000 (2071-400)
MAXXUM 9000 (2071-600)

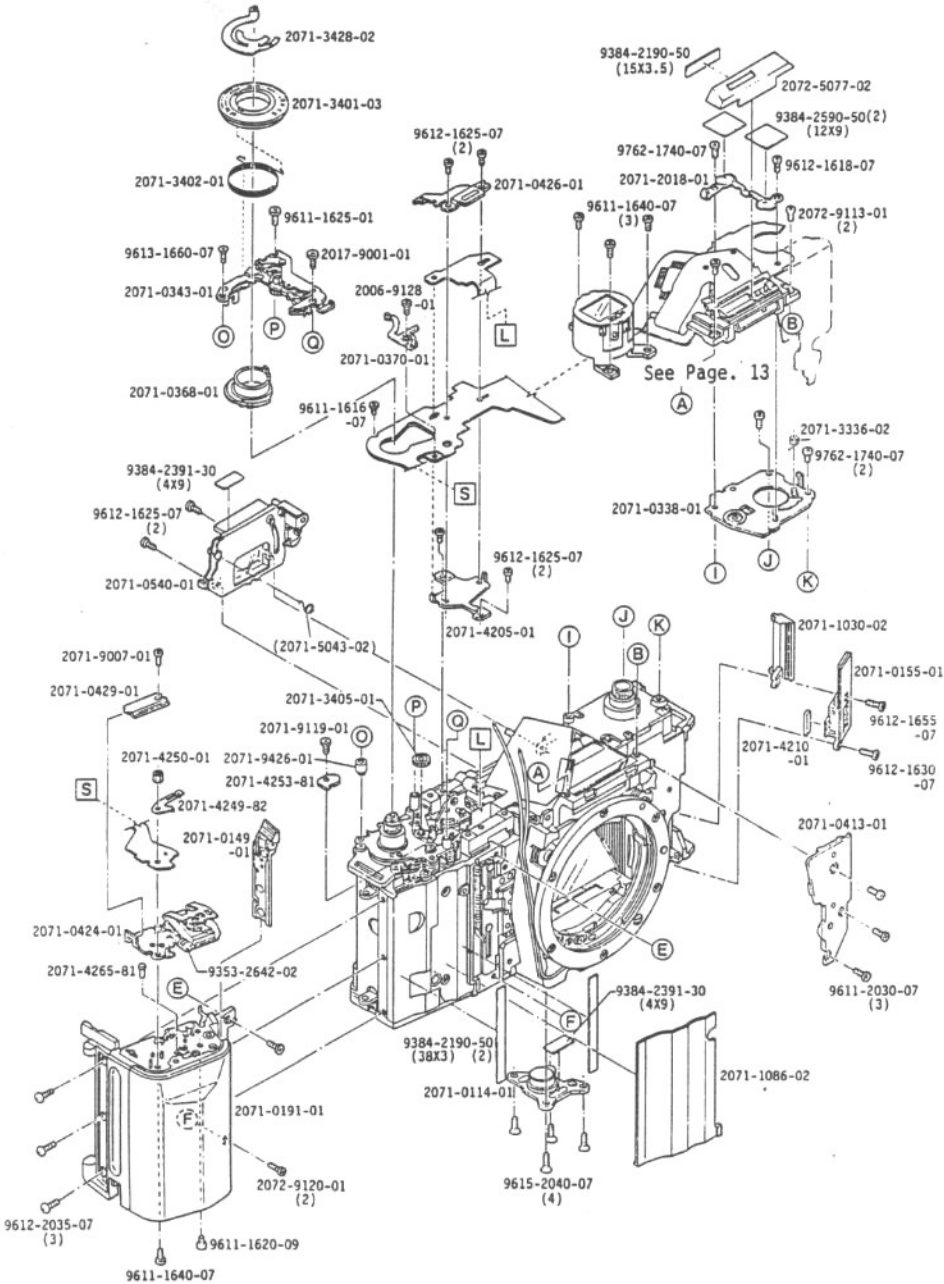

Part No.	Part Name		Qty.
2071-0114-01	Tripod socket set	三脚ねじセット	1
2071-0149-01	Preview switch button set	プレビュー釦セット	1
2071-0155-01	Remote control terminal set	リモートレリーズターミナルセット	1
2071-0191-01	Hand grip set	ハンドグリップセット	1
2071-0338-01	Lock lever holder set	ロックレバー支持板セット	1
2071-0343-01	Counter base plate set	カウンター台板セット	1
2071-0368-01	Main switch holder set	メインＳＷホルダーセット	1
2071-0370-01	Main switch click plate set	メインSWクリック板セット	1
2071-0413-01	Flexible board pressure plate set	フレキ押え板セット	1
2071-0424-01	Release base plate set	レリーズ台板セット	1
2071-0426-01	Flexible board-F pressure plate set	Ｆフレキ押え板セット	1
2071-0429-01	Connector pressure plate set	レリーズ基板押え板セット	1
2071-0540-01	Eyepiece lens set	接眼レンズセット	1
(2071-5043-02)	Eyepiece shutter spring	アイシャッターＳＰ	1
2071-1030-02	Lock cover	ロックカバー	1
2071-1086-02	Cover-B	カバーＢ	1
2071-2018-01	Key switch click plate	キーＳＷクリック板	1
2071-3336-02	Lock lever spring	ロックレバーＳＰ	1
2071-3401-03	Counter dial	カウンターラチェット	1
2071-3402-01	Counter return spring	カウンター戻しＳＰ	1
2071-3405-01	Counter gear	カウンター連動ギヤー	1
2071-3428-02	Counter index	カウンター指標板	1
2071-4205-01	Flexible board-F holder	Ｆフレキコネクター支持板	1
2071-4210-01	Rubber	押えゴム	1
2071-4249-82	Cartridge contact plate	カートリッジ検知接片	1
2071-4250-01	Nut	接片押えナット	1
2071-4253-81	Release base plate pressure Plate	レリーズ台板押え板	1
2071-4265-81	Cartridge contact pin	カートリッジ検知ピン	1
2072-5077-02	Light shield plate	採光窓遮光板	1

Part No.	Part Name		Qty.
2017-9001-01	Screw	調整板押えビス	1
2071-9007-01	Screw	止めねじ	1
2072-9113-01	Screw	止めねじ	2
2071-9119-01	Screw	止めねじ	1
2072-9120-01	Screw	止めねじ	2
2006-9128-01	Screw	止めねじ	1
2071-9426-01	Set position pin	位置決めピン	1
9353-2642-02	LED(TLR108A)	ＬＥＤ (LD1)	1
9384-2190-50	Double-faced tape(per roll)	両面テープ	3
9384-2391-30	Isolation tape(Per roll)	絶縁テープ	2
9384-2590-50	Mending tape(per roll)	メンディングテープ	2
9611-1616-07	Phillips type screw	十字穴付なべ小ねじ	1
9611-1620-09	Phillips type screw	十字穴付なべ小ねじ	1
9611-1625-01	Phillips type screw	十字穴付なべ小ねじ	1
9611-1640-07	Phillips type screw	十字穴付なべ小ねじ	4
9611-2030-07	Phillips type screw	十字穴付なべ小ねじ	3
9612-1618-07	Phillips type screw	十字穴付なべ小ねじ	1
9612-1625-07	Phillips type screw	十字穴付なべ小ねじ	6
9612-1630-07	Phillips type screw	十字穴付なべ小ねじ	1
9612-1655-07	Phillips type screw	十字穴付なべ小ねじ	1
9612-2035-07	Phillips type screw	十字穴付なべ小ねじ	3
9613-1660-07	Phillips type screw	十字穴付半丸小ねじ	1
9615-2040-07	Phillips type screw	十字穴付さら小ねじ	4
9762-1740-07	Tap tite screw	十字穴付タップタイトねじ	3

9000 (2071-200)
α 9000 (2071-400)
MAXXUM 9000 (2071-600)

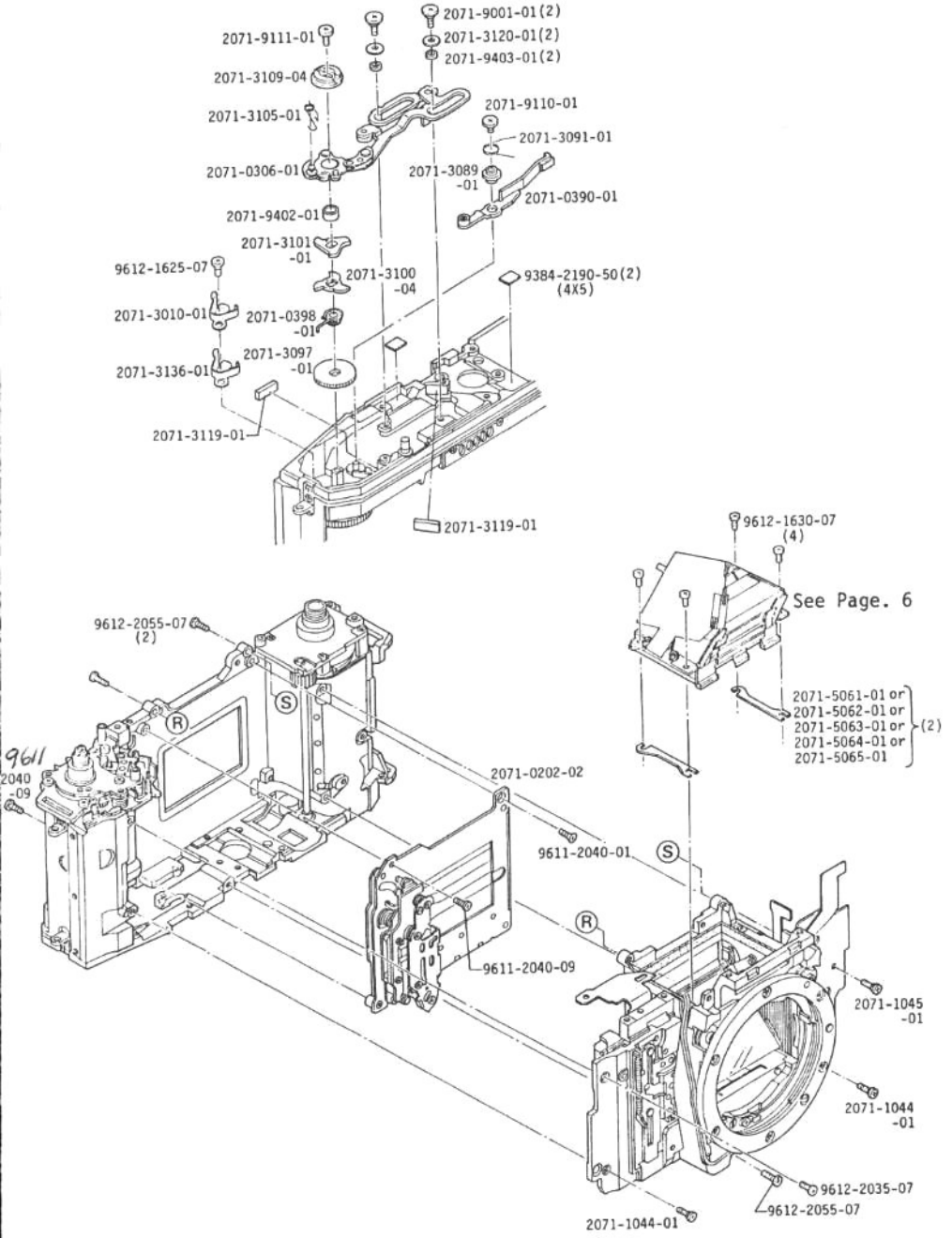

Part No.	Part Name		Qty.
2071-0202-02	Shutter set	シャッターセット	1
2071-0306-01	Charge plate set	チャージ板セット	1
2071-0390-01	Mirror charge lever set	ミラーチャージレバーセット	1
2071-0398-01	Collar set	巻取逆転防止板カラーセット	1
2071-1044-01	Screw	止めねじ	2
2071-1045-01	Screw	止めねじ	1
2071-3010-01	Irregular operation spring-A	誤操作防止バネA	1
2071-3089-01	Collar	ミラーチャージレバーカラー	1
2071-3091-01	Mirror charge spring	ミラーチャージレバーSP	1
2071-3097-01	Reversion turning stop gear	巻取逆転防止板	1
2071-3100-04	Charge cam-A	チャージカムA	1
2071-3101-01	Charge cam-B	チャージカムB	1
2071-3105-01	Charge spring	チャージ爪SP	1
2071-3109-04	Wind coupler	チャージカプラー	1
2071-3119-01	Rubber	チャージレバーストッパーゴム	2
2071-3120-01	Washer	チャージレバーワッシャー	2
2071-3136-01	Irregular operation spring-B	誤操作防止バネB	1
2071-5061-01	VB adjustment washer-A (t=0.2mm)	VB調整ワッシャーA	2
2071-5062-01	VB adjustment washer-B (t=0.25mm)	VB調整ワッシャーB	
2071-5063-01	VB adjustment washer-C (t=0.3mm)	VB調整ワッシャーC	
2071-5064-01	VB adjustment washer-D (t=0.35mm)	VB調整ワッシャーD	
2071-5065-01	VB adjustment washer-E (t=0.4mm)	VB調整ワッシャーE	
2071-9001-01	Screw	止めねじ	2
2071-9110-01	Screw	止めねじ	1
2071-9111-01	Screw	止めねじ	1
2071-9402-01	Collar	チャージ板カラー	1
2071-9403-01	Guide ring	チャージレバーガイドリング	2
9384-2190-50	Double-faced tape(per roll)	両面テープ	2
9611-2040-01	Phillips type screw	十字穴付なべ小ねじ	1
9611-2040-09	Phillips type screw	十字穴付なべ小ねじ	2
9612-1625-07	Phillips type screw	十字穴付なべ小ねじ	1
9612-1630-07	Phillips type screw	十字穴付なべ小ねじ	4
9612-2035-07	Phillips type screw	十字穴付なべ小ねじ	1
9612-2055-07	Phillips type screw	十字穴付なべ小ねじ	3

9000 (2071-200)
α 9000 (2071-400)
MAXXUM 9000 (2071-600)

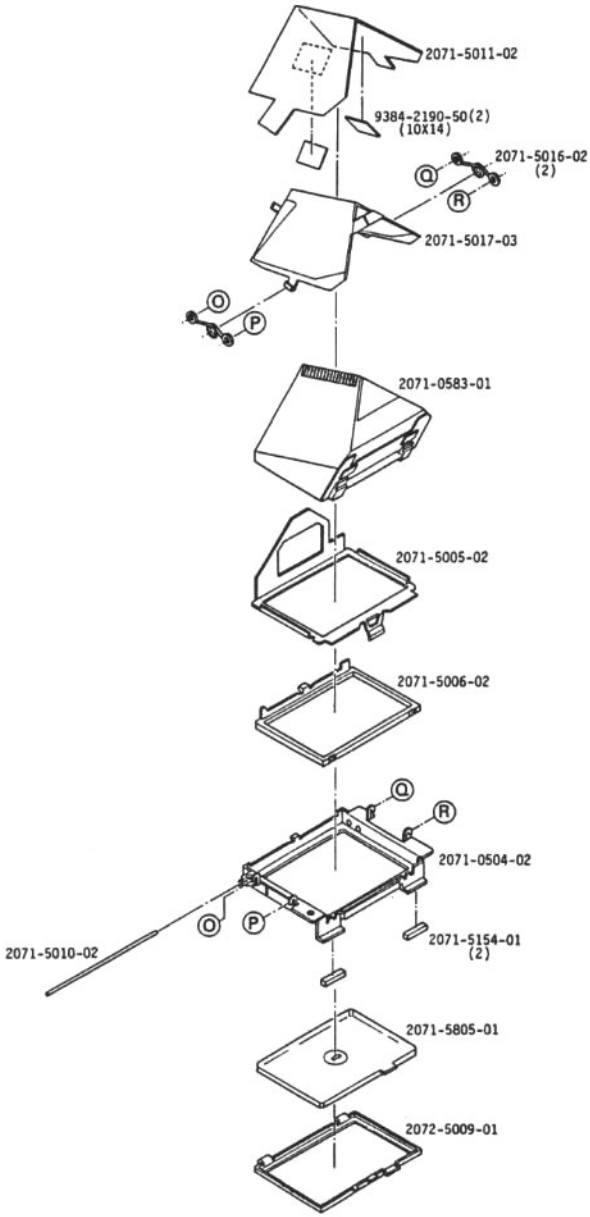

Part No.	Part Name		Qty.
2071-0504-02	Penta.holder set	ペンタホルダーセット	1
2071-0583-01	Pentaprism set	ペンタプリズムセット	1
2071-5005-02	Viewfinder frame	視野枠	1
2071-5006-02	Penta. packing	ペンタ敷板	1
2072-5009-01	Fresnel lens holder	焦点板ホルダー	1
2071-5010-02	Fresnel lens holder axis	焦点板ホルダー軸	1
2071-5011-02	Isolation sheet	ペンタ絶縁シート	1
2071-5016-02	Penta. Pressure spring	ペンタ押えＳＰ	2
2071-5017-03	Penta. Cover	ペンタ押え板	1
2071-5154-01	Mirror cushion	ミラークッション	2
2071-5805-01	Fresnel lens	焦点板	1
9384-2190-50	Double-faced tape(per roll)	両面テープ	2

9000 (2071-200)
α 9000 (2071-400)
MAXXUM 9000 (2071-600)

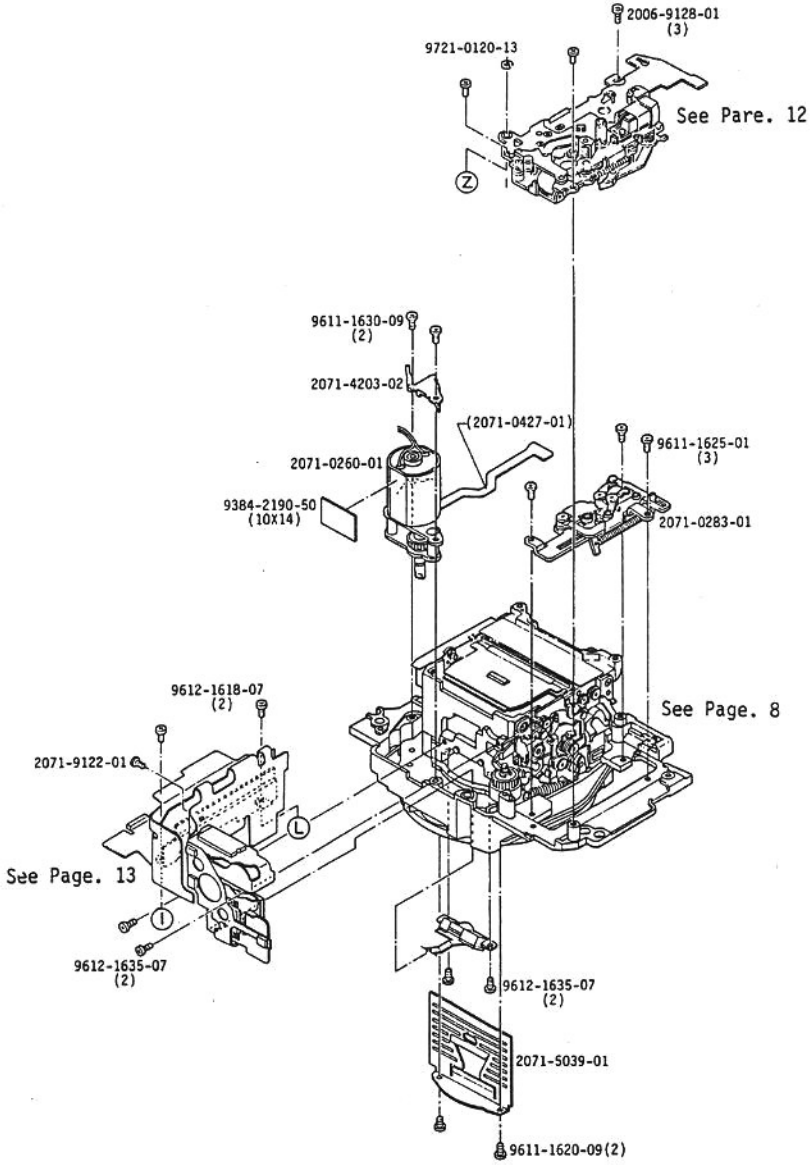

Part No.	Part Name		Qty.
2071-0260-01	AF drive set	ＡＦ駆動セット	1
(2071-0427-01)	Flexible PC board-C set	フレキシブル基板Ｃセット	1
2071-0283-01	PV base plate set	ＰＶ台板セット	1
2071-4203-02	Shield plate	測光シールド板	1
2071-5039-01	Flare shield plate	フレア防止板	1
2071-9122-01	Screw	止めねじ	1
2006-9128-01	Screw	止めねじ	3
9384-2190-50	Double-faced tape(per roll)	両面テープ	1
9611-1620-09	Phillips type screw	十字穴付なべ小ねじ	2
9611-1625-01	Phillips type screw	十字穴付なべ小ねじ	3
9611-1630-09	Phillips type screw	十字穴付なべ小ねじ	2
9612-1618-07	Phillips type screw	十字穴付なべ小ねじ	2
9612-1635-07	Phillips type screw	十字穴付なべ小ねじ	4
9721-0120-13	E-ring	Ｅリング	1

9000 (2071-200)
α 9000 (2071-400)
MAXXUM 9000 (2071-600)

Assy Part No. 2071-0116-01

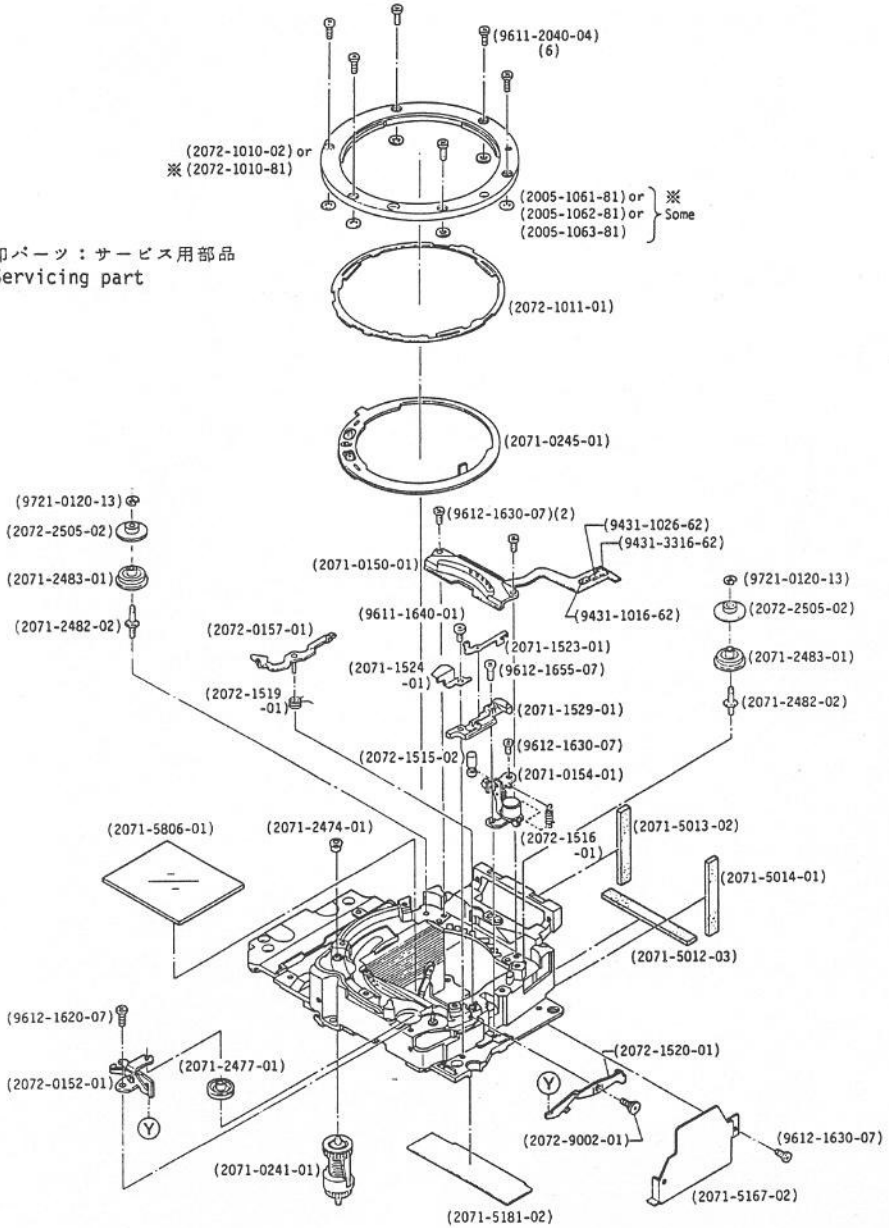

Part No.	Part Name		Qty.
2071-0116-01	Mirror box assembly	ミラーボックス完成品	1
(2071-0150-01)	BL contact holder set	BL接点ホルダーセット	1
(2072-0152-01)	Coupler lever set	カプラーレバーセット	1
(2071-0154-01)	Lens lock plate set	ロック機構台セット	1
(2072-0157-01)	Lens lock lever set	保持レバーセット	1
(2071-0241-01)	Transmit axis set	プリセット伝達軸セット	1
(2071-0245-01)	Aperture ring set	絞りリングセット	1
(2072-1010-02)	Bayonet lens mount	バヨネット座板	1
(2072-1010-81)	Bayonet lens mount(-0.1mm)	バヨネット座板	
(2072-1011-01)	Bayonet spring	バヨネットSP	1
(2005-1061-81)	Adjustment washer-A(t=0.02)	調整ワッシャーA	Some
(2005-1062-81)	Adjustment washer-B(t=0.05)	調整ワッシャーB	
(2005-1063-81)	Adjustment washer-C(t=0.1)	調整ワッシャーC	
(2072-1515-02)	Lens lock pin	レンズロックピン	1
(2072-1516-01)	Lens lock spring	レンズロックセットSP	1
(2072-1519-01)	Lens lock lever spring	保持レバーSP	1
(2072-1520-01)	Connecting lever	連動レバー	1
(2071-1523-01)	Focus mode contact	AM SW接片	1
(2071-1524-01)	Earth contact	AM アース接片	1
(2071-1529-01)	Focus mode holder	AM 接片ホルダー	1
(2071-2474-01)	Bushing	プリセット伝達軸ブッシュ	1
(2071-2477-01)	Ring roller	リング主ローラー	1
(2071-2482-02)	Ring roller axis	リングローラー軸	2
(2071-2483-01)	Ring roller-A	リングローラーA	2
(2072-2505-02)	Ring roller-B	リングローラーB	2
(2071-5012-03)	Packing-A	防塵シートA	1
(2071-5013-02)	Packing-B	防塵シートB	2
(2071-5014-01)	Packing-C	防塵シートC	1
(2071-5167-02	Mirror box side cover	巻戻し側カバー板	1
(2071-5181-02)	Light shield plate	遮光片	1
(2071-5806-01)	Mirror	主ミラー	1
(2072-9002-01)	Screw	連動レバー軸	1
(9431-1016-62)	Fixed resistor(1/4w,100Ω)	固定抵抗(R22)	1
(9431-1026-62)	Fixed resistor(1/4w,1kΩ)	固定抵抗(R21)	1
(9431-3316-62)	Fixed resistor(1/4w,330Ω)	固定抵抗(R20)	1
(9611-1640-01)	Phillips type screw	十字穴付なべ小ねじ	1
(9611-2040-04)	Phillips type screw	十字穴付なべ小ねじ	6
(9612-1620-07)	Phillips type screw	十字穴付なべ小ねじ	1
(9612-1630-07)	Phillips type screw	十字穴付なべ小ねじ	4
(9612-1655-07)	Phillips type screw	十字穴付なべ小ねじ	1
(9721-0120-13)	E-ring	Eリング	2

9000 (2071-200)
α 9000 (2071-400)
MAXXUM 9000 (2071-600)

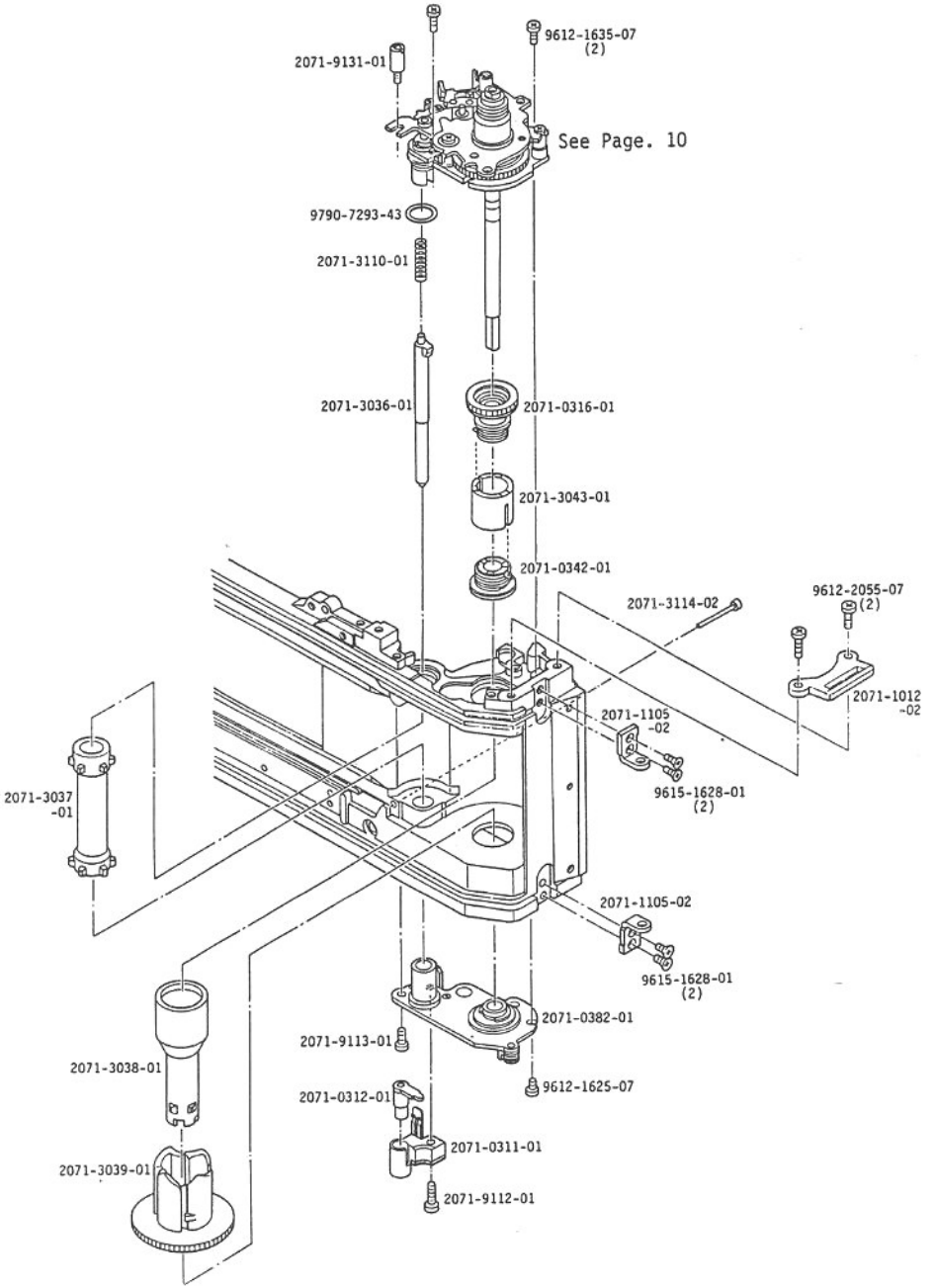

Part No.	Part Name		Qty.
2071-0311-01	Rewind button holder set	巻戻し釦ホルダーセット	1
2071-0312-01	Rewind release button set	巻戻し釦セット	1
2071-0316-01	Spool gear set	スプールギャーセット	1
2071-0342-01	Spool friction set	フリクションドラムセット	1
2071-0382-01	Winding base plate set	巻取台板セット	1
2071-1012-02	Strap eyelet(Right)	ストラップ取付環(右)	1
2071-1105-02	Hinge	裏蓋ヒンジ	2
2071-3036-01	Sprocket axis	スプロケット軸	1
2071-3037-01	Sprocket	スプロケット	1
2071-3038-01	Spool inner barrel	スプール内筒	1
2071-3039-01	Spool	スプール	1
2071-3043-01	Friction collar	フリクション駆動カラー	1
2071-3110-01	Rewind button spring	R釦解除SP	1
2071-3114-02	Film detect pin	フイルム検知ピン	1
2071-9112-01	Screw	止めねじ	1
2071-9113-01	Screw	止めねじ	1
2071-9131-01	Screw	カウンター台板取付ビス	1
9612-1625-07	Phillips type screw	十字穴付なべ小ねじ	1
9612-1635-07	Phillips type screw	十字穴付なべ小ねじ	2
9612-2055-07	Phillips type screw	十字穴付なべ小ねじ	2
9615-1628-01	Phillips type screw	十字穴付さら小ねじ	4
9790-7293-43	Washer	薄ワッシャー	1

9000 (2071-200)
α 9000 (2071-400)
MAXXUM 9000 (2071-600)

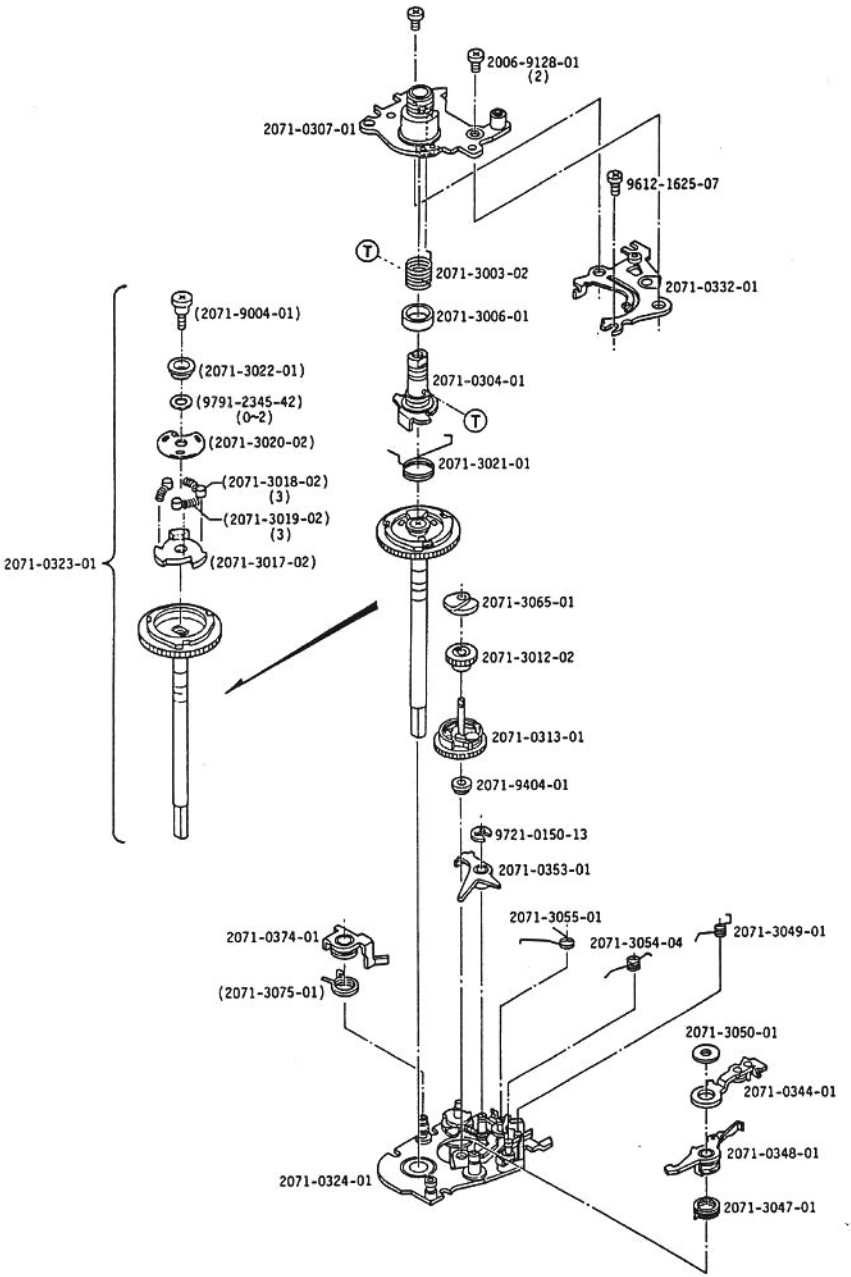

Part No.	Part Name		Qty.
2071-0304-01	Winding lever axis set	巻上レバー軸セット	1
2071-0307-01	Winding lever plate set	巻上レバー台板セット	1
2071-0313-01	Sprocket idle gear set	スプロケットアイドルギャーセット	1
2071-0323-01	Winding axis set	巻取軸セット	1
(2071-3017-02)	One way cam	一方向クラッチコロカム	1
(2071-3018-02)	Spring hook	一方向クラッチコロ	3
(2071-3019-02)	Cam spring	一方向クラッチコロＳＰ	3
(2071-3020-02)	Cam pressure plate	クラッチコロ押え	1
(2071-3022-01)	Spring holder	クラッチ戻しＳＰホルダー	1
(2071-9004-01)	Screw	クラッチカム押えビス	1
(9791-2345-42)	Washer	薄ワッシャー	0~2
2071-0324-01	Winding gear base plate set	巻取ギヤー台板セット	1
2071-0332-01	Winding middle plate set	巻取中板セット	1
2071-0344-01	Winding stop lever set	巻止めレバーセット	1
2071-0348-01	Winding stop release lever set	巻止め解除レバーセット	1
2071-0353-01	Over-run prevention lever set	オーバーラン防止レバーセット	1
2071-0374-01	Multiple-exporsure lever set	多重操作レバーセット	1
(2071-3075-01)	Multiple-exporsure spring	多重操作レバーＳＰ	1
2071-3003-02	Winding lever return spring	巻上レバー戻しＳＰ	1
2071-3006-01	Collar	巻上レバー軸受カラー	1
2071-3012-02	Winding idle gear	巻取アイドルギャー	1
2071-3021-01	Return spring	一方向クラッチ戻しＳＰ	1
2071-3047-01	Winding stop spring	巻止めＳＰ	1
2071-3049-01	Winding stop release spring	巻止め解除ＳＰ	1
2071-3050-01	Spacer	巻止め解除レバー間隔板	1
2071-3054-04	Winding stop sub lever spring	巻止め係止レバーＳＰ	1
2071-3055-01	Over-run prevention spring	オーバーラン防止レバーＳＰ	1
2071-3065-01	Winding stop cam	巻止め制御カム	1
2006-9128-01	Screw	止めねじ	2
2071-9404-01	Collar	スプロケットアイドルギャー軸受	1
9612-1625-07	Phillips type scyew	十字穴付なべ小ねじ	1
9721-0150-13	E-ring	Ｅリング	1

9000 (2071-200)
α 9000 (2071-400)
MAXXUM 9000 (2071-600)

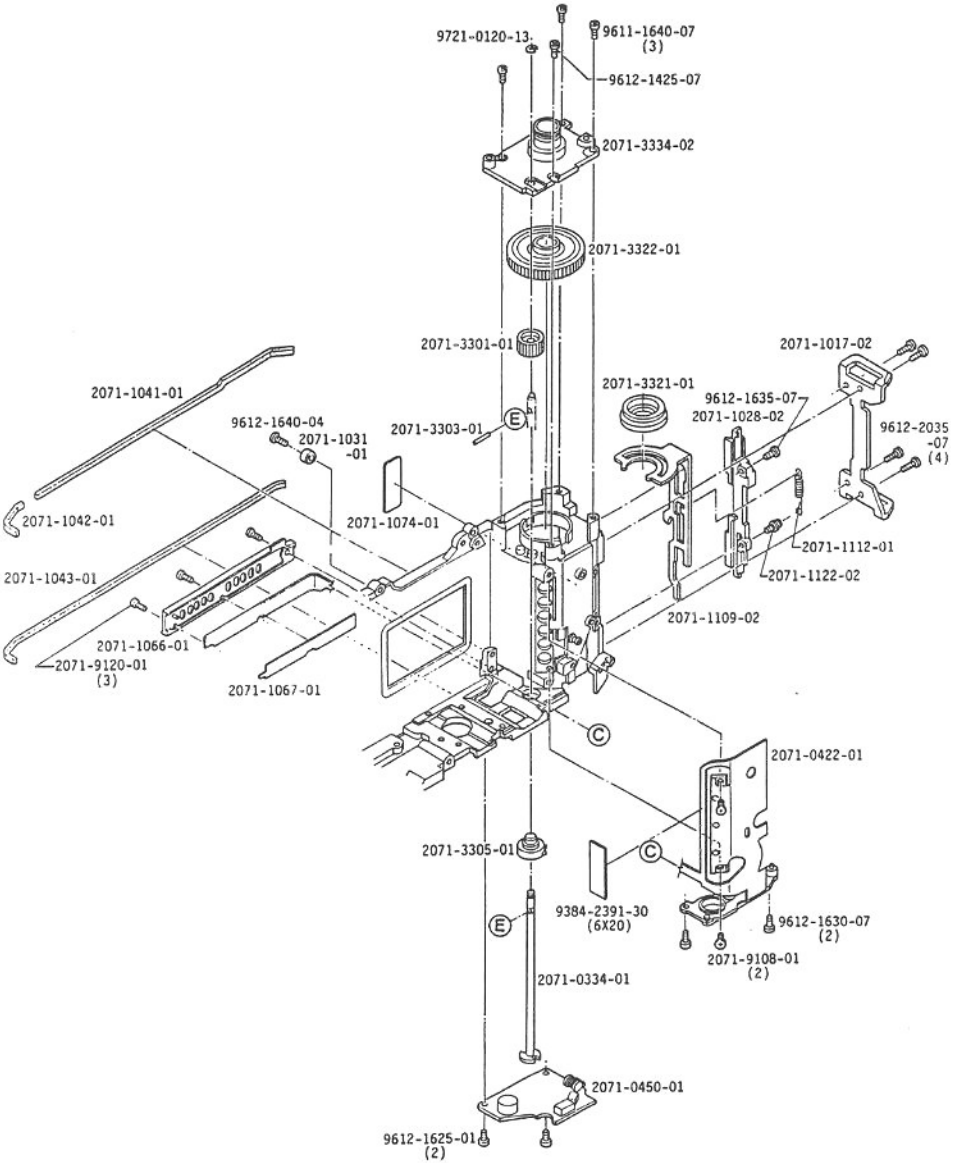

Part No.	Part Name		Qry.
2071-0334-01	Rewind coupler set	巻戻しカプラーセット	1
2071-0422-01	Flexible PC board-D set	フレキシブル基板Dセット	1
2071-0450-01	DC/DC converter PC board set	DC/DCコンバーター基板セット	1
2071-1017-02	Strap eyelet(Left)	ストラップ取付環(左)	1
2071-1028-02	Lock lever cover	ロックレバーカバー	1
2071-1031-01	Film guide collar	フイルムガイドカラー	1
2071-1041-01	Body light shield sponge-A	ボディー遮光片A	1
2071-1042-01	Body light shield sponge-B	ボディー遮光片B	1
2071-1043-01	Body light shield sponge-C	ボディー遮光片C	1
2071-1066-01	Contact pin holder	DB信号ピンホルダー	1
2071-1067-01	Double-faced tape	DB接点接合テープ	1
2071-1074-01	Cover plate-A	カバー板A	1
2071-1109-02	Lock lever	ロックレバー	1
2071-1112-01	Lock spring	裏蓋ロックSP	1
2071-1122-02	Screw	ロックカバー止めねじ	1
2071-3301-01	Rewinding pinion	巻戻しピニオン	1
2071-3303-01	Pin	巻戻しピニオンピン	1
2071-3305-01	Coupler receiver	送りシャフト受	1
2071-3321-01	Collar	巻戻し軸カラー	1
2071-3322-01	Rewinding gear	巻戻しギャー	1
2071-3334-02	Rewinding axis receiver	巻戻し軸受	1
2071-9108-01	Screw	止めねじ	2
2071-9120-01	Screw	止めねじ	3
9384-2391-30	Isolation tape(per roll)	絶縁テープ	1
9611-1640-07	Phillips type screw	十字穴付なべ小ねじ	3
9612-1425-07	Phillips type screw	十字穴付なべ小ねじ	1
9612-1625-01	Phillips type screw	十字穴付なべ小ねじ	2
9612-1630-07	Phillips type screw	十字穴付なべ小ねじ	2
9612-1635-07	Phillips type screw	十字穴付なべ小ねじ	1
9612-1640-04	Phillips type screw	十字穴付なべ小ねじ	1
9612-2035-07	Phillips type screw	十字穴付なべ小ねじ	4
9721-0120-13	E-ring	Eリング	1

9000 (2071-200)
α 9000 (2071-400)
MAXXUM 9000 (2071-600)

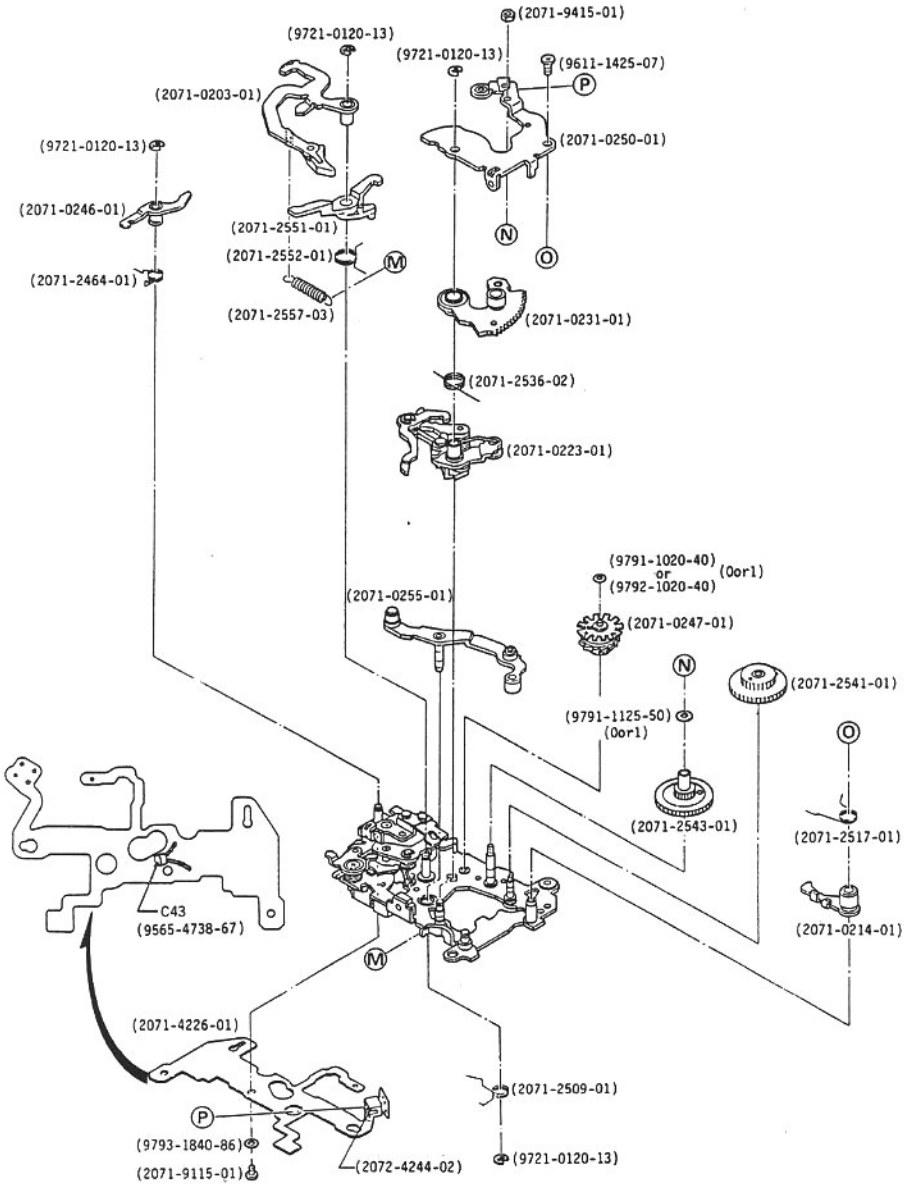

Part No.	Part Name		Qty.
2071-0253-01	Aperture control set	絞り台板セット	1
(2071-0203-01)	Return trigger lever set	絞り戻しトリガーレバーセット	1
(2071-0214-01)	Aperture charge limiter set	絞りチャージリミッターセット	1
(2071-0223-01)	Sector gear stop lever set	絞りセクターギャー係止レバーセット	1
(2071-0231-01)	Sector gear set	絞りセクターギャーセット	1
(2071-0246-01)	Return stop lever set	絞り戻し係止レバーセット	1
(2071-0247-01)	Aperture stop gear set	絞り爪車セット	1
(2071-0250-01)	Aperture base plate cover set	絞りカバー板セット	1
(2071-0255-01)	Aperture charge lever set	絞りチャージレバーセット	1
(2071-2464-01)	Return stop lever spring	絞り戻し係止レバーＳＰ	1
(2071-2509-01)	Aperture charge lever spring	絞りチャージレバーＳＰ	1
(2071-2517-01)	Charge limiter spring	絞りチャージリミッターSP	1
(2071-2536-02)	Sector gear spring	絞り駆動ＳＰ	1
(2071-2541-01)	First gear	絞り一番車	1
(2071-2543-01)	Second gear	絞り二番車	1
(2071-2551-01)	Stop gear lever	絞り爪車係止レバー	1
(2071-2552-01)	Stop gear lever spring	絞り爪車係止レバーＳＰ	1
(2071-2557-03)	Return trigger lever spring	絞り戻しトリガーレバーSP	1
(2071-4226-01)	Flexible PC board-F	フレキシブル基板F	1
(2072-4244-02)	Photo interaptor	フォトインタラプター	1
(2071-9115-01)	Screw	止めねじ	1
(2071-9415-01)	Nut	ナット	1
(9565-4738-67)	Condenser(Ceramic)(0.047μF/50V)	コンデンサー（C43）	1
(9611-1425-07)	Phillips type screw	十字穴付なべ小ねじ	1
(9721-0120-13)	E-ring	Ｅリング	4
(9791-1020-40)	Washer	薄ワッシャー	0or1
(9791-1225-50)	Washer	薄ワッシャー	0or1
(9792-1020-40)	Washer	薄ワッシャー	0or1
(9793-1840-86)	Washer	薄ワッシャー	1

9000 (2071-200)
α 9000 (2071-400)
MAXXUM 9000 (2071-600)

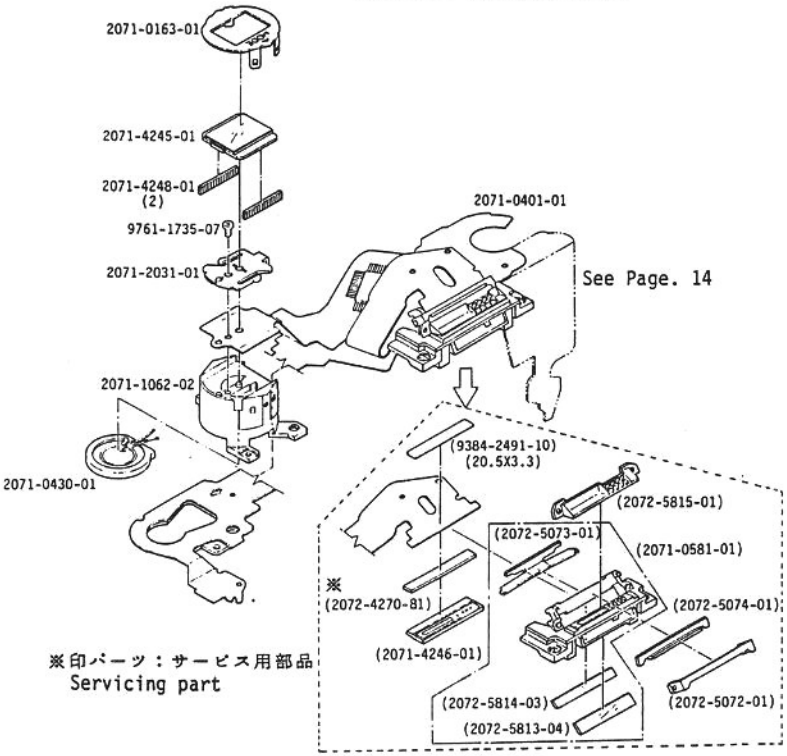

※印パーツ：サービス用部品
Servicing part

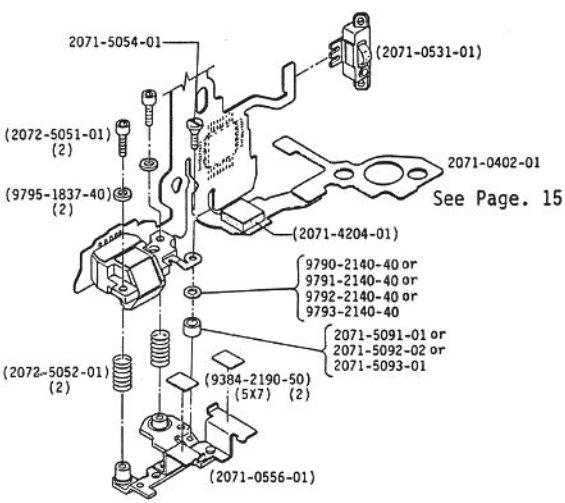

9000 (2071-200)
α 9000 (2071-400)
MAXXUM 9000 (2071-600)

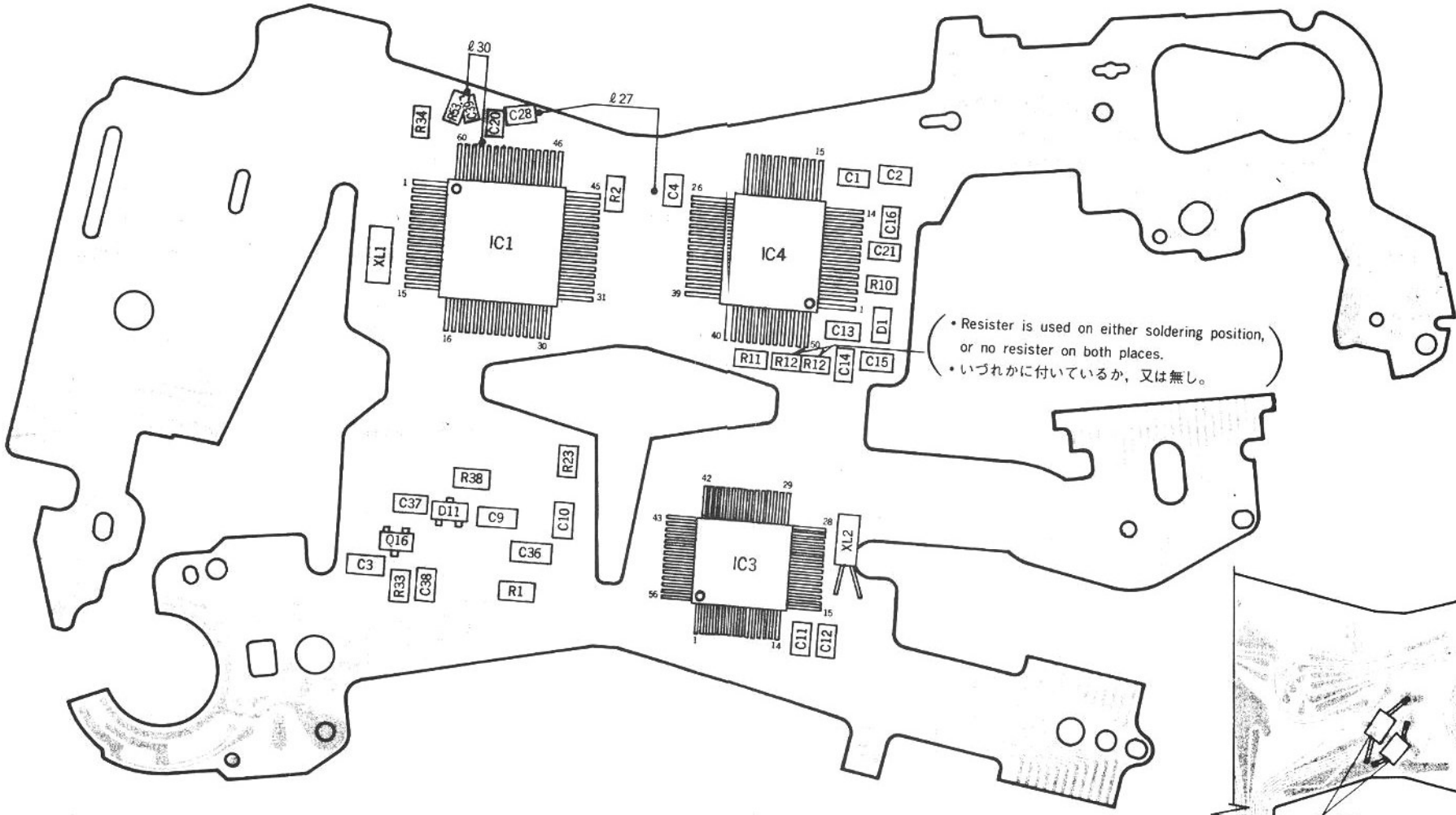

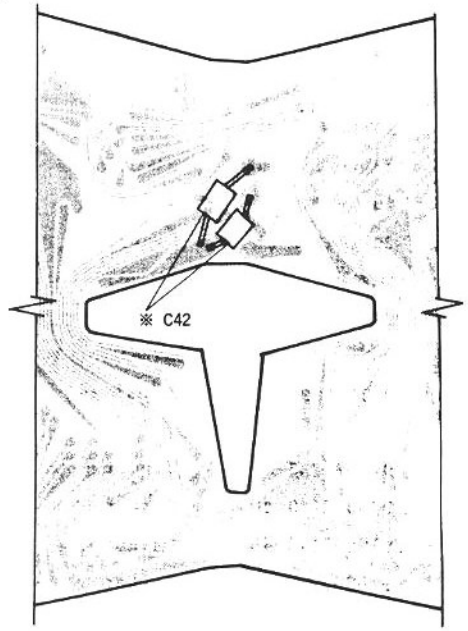

C42 : Adjusting condenser
See Repair Guide (P.29) for detail.
Flexible PC board-A set does not include C42.

※C42は，調整用のコンデンサーです。
詳細は，調整編P.29を参照して下さい。
尚，C42は，フレキセットには含まれません。

Part No.	Part Name		Qty.
2071-0163-01	LCD-1 cover set	液晶押え板セット	1
2071-0401-01	Flexible PC board-A set	フレキシブル基板Aセット	1
(2071-0581-01)	In-finder set	インファインダーセット	1
(2071-4246-01)	LCD-2	LCD-2	1
(2072-4270-81)	Connector	エラステイクコネクター	1
(2072-5072-01)	In-finder pressure-B	インファインダー押え板B	1
(2072-5073-01)	In-finder pressure-C	LCD押え	1
(2072-5074-01)	In-finder pressure-A	ファインダー押え板A	1
(2072-5813-04)	In-finder mirror-A	インファインダーミラーA	1
(2072-5814-03)	In-finder mirror-B	インファインダーミラーB	1
(2072-5815-01)	In-finder prism	採光プリズム	1
(9384-2491-10)	Vinyl tape(Per roll)	ビニールテープ	1
2071-0402-01	Flexible PC board-B set	フレキシブル基板Bセット	1
(2071-0531-01)	SPC set	測光ホルダーセット	1
(2071-0556-01)	Base plate set	台板セット	1
(2071-4204-01)	Spacer	Bフレキスペーサー	1
(2072-5051-01)	AF adjustment screw	AF調整ビス	2
(2072-5052-01)	AF adjustment spring	AF調整SP	2
(9384-2190-50)	Double-faced tape(Per roll)	両面テープ	2
(9795-1837-40)	Washer	薄ワッシャー	2
2071-0430-01	Piezo buzzer set	ピエゾセット	1
2071-1062-02	LCD-1 holder	液晶支持台	1
2071-2031-01	Flexible board-A pressure plate	フレキ押え板	1
2071-4245-01	LCD-1	LCD-1	1
2071-4248-01	Connector	ゴムコネクター	2
2071-5054-01	AF adjustment screw-A	AF調整ビスA	1
2071-5091-01	Adjustment washer-A(ℓ=2.5mm)	調整ワッシャーA	1
2071-5092-02	Adjustment washer-B(ℓ=2.9mm)	調整ワッシャーB	
2071-5093-01	Adjustment washer-C(ℓ=3.3mm)	調整ワッシャーC	
9761-1735-07	Tap tite screw	十字穴付タップタイトねじ	1
9790-2140-40	Washer	薄ワッシャー	0～1
9791-2140-40	Washer	薄ワッシャー	
9792-2140-40	Washer	薄ワッシャー	
9793-2140-40	Washer	薄ワッシャー	

9000 (2071-200)
α 9000 (2071-400)
MAXXUM 9000 (2071-600)

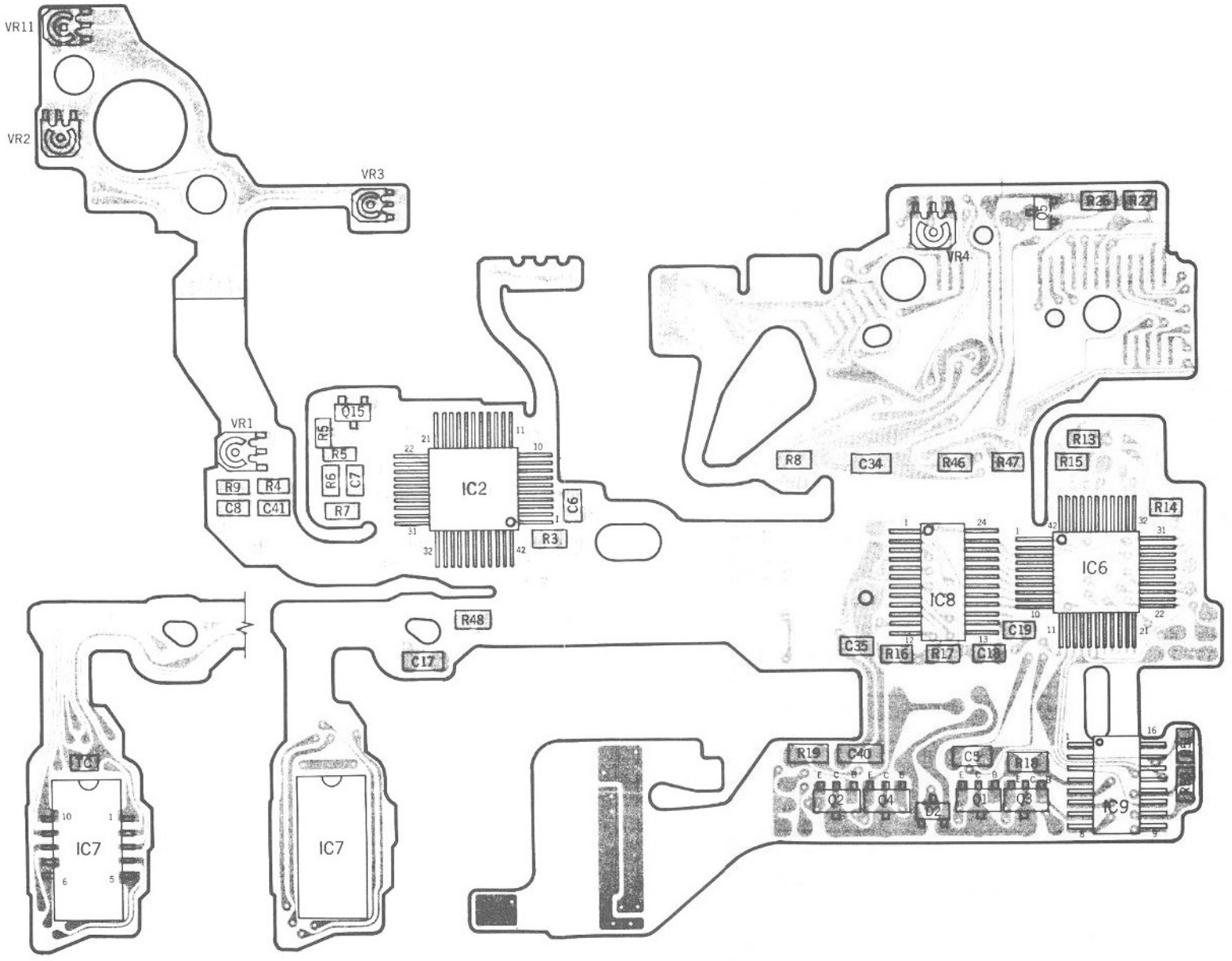

Symbol	Part No.	Part Name(Maker,Type)	Qty.
R11	9432-4735-63	Fixed resistor(⅙W,47KΩ)	1
	9432-5135-63	Fixed resistor(⅙W,51KΩ)	
	9432-5635-63	Fixed resistor(⅙W,56KΩ)	
	9432-6235-63	Fixed resistor(⅙W,62KΩ)	
	9432-6835-63	Fixed resistor(⅙W,68KΩ)	
R12	9431-1036-62	Fixed resistor(⅙W,10KΩ)	0～1
	9431-1536-62	Fixed resistor(⅙W,15KΩ)	
	9431-2236-62	Fixed resistor(⅙W,22KΩ)	
	9431-3336-62	Fixed resistor(⅙W,33KΩ)	
	9431-6826-62	Fixed resistor(⅙W,6.8KΩ)	
	9431-6836-62	Fixed resistor(⅙W,68KΩ)	
	9432-1036-63	Fixed resistor(⅙W,10KΩ)	
	9432-1536-63	Fixed resistor(⅙W,15KΩ)	
	9432-2236-63	Fixed resistor(⅙W,22KΩ)	
	9432-3336-63	Fixed resistor(⅙W,33KΩ)	
	9432-6826-63	Fixed resistor(⅙W,6.8KΩ)	
	9432-6836-63	Fixed resistor(⅙W,68KΩ)	
R23	9431-3336-62	Fixed resistor(⅙W,33KΩ)	1
	9432-3336-63	Fixed resistor(⅙W,33KΩ)	
R33	9431-1056-62	Fixed resistor(⅙W, 1MΩ)	1
	9432-1056-63	Fixed resistor(⅙W, 1MΩ)	
R34	9431-2226-62	Fixed resistor(⅙W,2.2KΩ)	1
	9432-2226-63	Fixed resistor(⅙W,2.2KΩ)	
R38	9431-5136-62	Fixed resistor(⅙W,51KΩ)	1
	9432-5136-63	Fixed resistor(⅙W,51KΩ)	
C1,C15	9564-3325-69	Condenser(Ceramic)(3300PF/25V)	2
	9565-3325-37	Condenser(Ceramic)(3300PF/50V)	
C2	9565-2215-37	Condenser(Ceramic)(220PF/50V)	1
C3,C14,C16,C20 C21,C39	9564-3335-65	Condenser(Ceramic)(0.033μF/25V)	6
C4	9564-1035-69	Condenser(Ceramic)(0.01μF/25V)	1
	9565-1035-37	Condenser(Ceramic)(0.01μF/50V)	
C9,C10,C36	9564-3348-66	Condenser(Ceramic)(0.03μF/25V)	3
C11,C12	9564-2204-65	Condenser(Ceramic)(22PF/25V)	1
C13	9565-1044-64	Condenser(Ceramic)(0.1μF/50V)	1
C28	9565-4715-37	Condenser(Ceramic)(470PF/50V)	1
C37	9564-1048-63	Condenser(Ceramic)(0.1μF/25V)	1
C38	9565-1025-37	Condenser(Ceramic)(1000PF/50V)	1
※ C42	9565-3315-64	Condenser(Ceramic)(330PF/50V)	1
	9565-4715-64	Condenser(Ceramic)(470PF/50V)	
	9565-6815-64	Condenser(Ceramic)(680PF/50V)	
XL1	9373-4461-01	Crystal resonator(FAR-C4CB)	1
XL2	9373-4161-02	Crystal resonator(KF-26)	1
	9373-4162-01	Crystal resonator(C-2-32.7)	
	9373-4163-01	Crystal resonator(DT-38)	

Flexible PC board-Aset

Assy part No.2071-0401-01 Assy part Name フレキシブル基板Aセット

Symbol	Part No.	Part Name(Maker,Type)	Qty.
D1	9361-1461-03	Diode(ROHM,RLS-73)	1
D11	9361-1364-04	Diode(TOSHIBA,1SS182)	1
	9361-1364-05	Diode(TOSHIBA,1SS183)	
	9361-1364-06	Diode(TOSHIBA,1SS184)	
	9361-1462-02	Diode(MATSUSHITA,MA151WK)	
	9361-1463-04	Diode(SANYO,DCB015)	
	9361-1465-01	Diode(MITSUBISHI,MC2838)	
Q16	9362-1032-01	Transistor(TOSHIBA,2SC2712)	1
	9362-1032-02	Transistor(TOSHIBA,2SC2712)	
	9362-1032-03	Transistor(TOSHIBA,2SC2712)	
	9362-1032-04	Transistor(TOSHIBA,2SC2712)	
	9362-1461-01	Transistor(MITSUBISHI,2SC3052)	
	9362-1461-02	Transistor(MITSUBISHI,2SC3052)	
	9362-1461-03	Transistor(MITSUBISHI,2SC3052)	
	9362-1464-01	Transistor(ROHM,2SC2412K)	
	9362-1464-02	Transistor(ROHM,2SC2412K)	
	9362-1464-03	Transistor(ROHM,2SC2412K)	
	9362-1633-01	Transistor(NEC,2SC1623)	
	9362-1633-02	Transistor(NEC,2SC1623)	
	9362-1633-03	Transistor(NEC,2SC1623)	
	9362-1633-04	Transistor(NEC,2SC1623)	
R1	9431-6846-62	Fixed resistor(1/8W,680KΩ)	1
	9432-6846-63	Fixed resistor(1/8W,680KΩ)	
R2	9432-1068-61	Fixed resistor(1/8W,10MΩ)	1
	9432-2068-61	Fixed resistor(1/8W,20MΩ)	
R53,R10	9431-1036-62	Fixed resistor(1/8W,10KΩ)	2
	9432-1036-63	Fixed resistor(1/8W,10KΩ)	
R11	9431-2435-61	Fixed resistor(1/8W,24KΩ)	1
	9431-2735-61	Fixed resistor(1/8W,27KΩ)	
	9431-3035-61	Fixed resistor(1/8W,30KΩ)	
	9431-3335-61	Fixed resistor(1/8W,33KΩ)	
	9431-3635-61	Fixed resistor(1/8W,36KΩ)	
	9431-3935-61	Fixed resistor(1/8W,39KΩ)	
	9431-4335-61	Fixed resistor(1/8W,43KΩ)	
	9431-4735-61	Fixed resistor(1/8W,47KΩ)	
	9431-5135-61	Fixed resistor(1/8W,51KΩ)	
	9431-5635-61	Fixed resistor(1/8W,56KΩ)	
	9431-6235-61	Fixed resistor(1/8W,62KΩ)	
	9431-6835-61	Fixed resistor(1/8W,68KΩ)	
	9432-2435-63	Fixed resistor(1/8W,24KΩ)	
	9432-2735-63	Fixed resistor(1/8W,27KΩ)	
	9432-3035-63	Fixed resistor(1/8W,30KΩ)	
	9432-3335-63	Fixed resistor(1/8W,33KΩ)	
	9432-3635-63	Fixed resistor(1/8W,36KΩ)	
	9432-3935-63	Fixed resistor(1/8W,39KΩ)	
	9432-4335-63	Fixed resistor(1/8W,43KΩ)	

Flexible PC board-B set

Assy Part No. 2071-0402-01 Assy Part Name フレキシブル基板Bセット

Symbol	Part No.	Part Name(Maker,Type)	Qty.
D2	9361-1462-01	Diode(MATSUSHITA,MA151WA)	1
	9361-1463-01	Diode(SANYO,DCA015)	
Q1,Q2	9362-2361-02	Transistor(TOSHIBA,2SC2982)	2
	9362-2361-03	Transistor(TOSHIBA,2SC2982)	
	9362-2361-04	Transistor(TOSHIBA,2SC2982)	
	9362-2461-01	Transistor(SANYO,2SD1620)	
	9362-2462-01	Transistor(MATSUSHITA,2SD1119)	
	9362-2462-02	Transistor(MATSUSHITA,2SD1119)	
	9362-2462-03	Transistor(MATSUSHITA,2SD1119)	
Q3,Q4	9363-1463-02	Transistor(SANYO,2SB1120)	2
	9363-1463-03	Transistor(SANYO,2SB1120)	
	9363-1464-02	Transistor(MATSUSHITA,2SB1073)	
	9363-1464-03	Transistor(MATSUSHITA,2SB1073)	
	9363-2361-02	Transistor(TOSHIBA,2SA1314)	
	9363-2361-03	Transistor(TOSHIBA,2SA1314)	
Q5	9363-1033-01	Transistor(SANYO,2SA1179)	1
	9363-1033-02	Transistor(SANYO,2SA1179)	
	9363-1033-03	Transistor(SANYO,2SA1179)	
	9363-1033-04	Transistor(SANYO,2SA1179)	
	9363-1363-01	Transistor(TOSHIBA,2SA1298)	
	9363-1363-02	Transistor(TOSHIBA,2SA1298)	
	9363-1461-01	Transistor(NEC,2SB736)	
	9363-1461-02	Transistor(NEC,2SB736)	
	9363-1461-03	Transistor(NEC,2SB736)	
	9363-1461-04	Transistor(NEC,2SB736)	
	9363-1461-05	Transistor(NEC,2SB736)	
Q15	9364-4461-01	Transistor(TOSHIBA,2SJ106)	1
	9364-4461-02	Transistor(TOSHIBA,2SJ106)	
R3	9431-1056-62	Fixed resistor(1/6W, 1MΩ)	1
	9432-1056-63	Fixed resistor(1/6W, 1MΩ)	
R4	9431-2436-62	Fixed resistor(1/6W, 24KΩ)	1
	9432-2436-63	Fixed resistor(1/6W, 24KΩ)	
R5	9431-1046-62	Fixed resistor(1/6W,100KΩ)	1
	9431-2036-62	Fixed resistor(1/6W, 20KΩ)	
	9431-2046-62	Fixed resistor(1/6W,200KΩ)	
	9431-2236-62	Fixed resistor(1/6W, 22KΩ)	
	9431-2436-62	Fixed resistor(1/6W, 24KΩ)	
	9431-2736-62	Fixed resistor(1/6W, 27KΩ)	
	9431-3336-62	Fixed resistor(1/6W, 33KΩ)	
	9431-3936-62	Fixed resistor(1/6W, 39KΩ)	
	9431-5136-62	Fixed resistor(1/6W, 51KΩ)	
	9431-6836-62	Fixed resistor(1/6W, 68KΩ)	
	9432-1046-63	Fixed resistor(1/6W,100KΩ)	
	9432-2036-63	Fixed resistor(1/6W, 20KΩ)	
	9432-2046-63	Fixed resistor(1/6W,200KΩ)	
	9432-2236-63	Fixed resistor(1/6W, 22KΩ)	
	9432-2436-63	Fixed resistor(1/6W, 24KΩ)	
	9432-2736-63	Fixed resistor(1/6W, 27KΩ)	

Symbol	Part No.	Part Name(Maker,Type)	Qty.
R5	9432-3336-63	Fixed resistor(1/6W, 33KΩ)	1
	9432-3936-63	Fixed resistor(1/6W, 39KΩ)	
	9432-5136-63	Fixed resistor(1/6W, 51KΩ)	
	9432-6836-63	Fixed resistor(1/6W, 68KΩ)	
R6	9431-2246-62	Fixed resistor(1/6W,220KΩ)	1
	9432-2246-63	Fixed resistor(1/6W,220KΩ)	
R7	9431-6826-62	Fixed resistor(1/6W, 6.8KΩ)	1
	9432-6826-63	Fixed resistor(1/6W, 6.8KΩ)	
R8	9431-2746-62	Fixed resistor(1/6W,270KΩ)	1
	9431-3346-62	Fixed resistor(1/6W,330KΩ)	
	9431-3946-62	Fixed resistor(1/6W,390KΩ)	
	9432-2746-63	Fixed resistor(1/6W,270KΩ)	
	9432-3346-63	Fixed resistor(1/6W,330KΩ)	
	9432-3946-63	Fixed resistor(1/6W,390KΩ)	
R9,R27	9431-2226-62	Fixed resistor(1/6W, 2.2KΩ)	2
	9432-2226-63	Fixed resistor(1/6W, 2.2KΩ)	
R13,R15	9431-1826-62	Fixed resistor(1/6W, 1.8KΩ)	2
	9432-1826-63	Fixed resistor(1/6W, 1.8KΩ)	
R14	9431-1026-62	Fixed resistor(1/6W, 1KΩ)	1
	9432-1026-63	Fixed resistor(1/6W, 1KΩ)	
R16	9431-2736-62	Fixed resistor(1/6W, 27KΩ)	1
	9432-2736-63	Fixed resistor(1/6W, 27KΩ)	
R17	9431-8236-63	Fixed resistor(1/6W, 82KΩ)	1
	9432-8236-62	Fixed resistor(1/6W, 82KΩ)	
R18,R19	9432-1016-65	Fixed resistor(1/6W,100Ω)	2
R26,R50,R51	9431-3336-62	Fixed resistor(1/6W, 33KΩ)	3
	9432-3336-63	Fixed resistor(1/6W, 33KΩ)	
R46,R47	9431-1036-62	Fixed resistor(1/6W, 10KΩ)	2
	9432-1036-63	Fixed resistor(1/6W, 10KΩ)	
R48	9431-3906-62	Fixed resistor(1/6W, 39KΩ)	1
	9432-3906-63	Fixed resistor(1/6W, 39KΩ)	
VR1	9472-1039-63	Variable resistor(1/6W,10KΩ)	1
VR2,VR3	9472-2239-63	Variable resistor(1/6W,22KΩ)	2
VR4	9472-3339-64	Variable resistor(1/6W,33KΩ)	1
VR11	9472-3339-63	Variable resistor(1/6W,33KΩ)	1
C5	9531-2255-70	Condenser(Tantalum)(2.2μF/6.3V)	1
	9532-2255-67	Condenser(Tantalum)(2.2μF/7V)	
C6	9565-1235-37	Condenser(Ceramic)(0.012μF/50V)	1
C7,C8	9564-1035-69	Condenser(Ceramic)(0.01μF/25V)	2
	9565-1035-37	Condenser(Ceramic)(0.01μF/50V)	
C17	9533-1055-67	Condenser(Tantalum)(1μF/16V)	1
C18	9565-6825-37	Condenser(Ceramic)(6800PF/50V)	1
C19	9565-3325-37	Condenser(Ceramic)(3300PF/50V)	1
C34,C35,C41	9564-1048-63	Condenser(Ceramic)(0.1μF/25V)	3
C40	9533-4745-65	Condenser(Tantalum)(0.47μF/16V)	1
	9534-4745-68	Condenser(Tantalum)(0.47μF/25V)	
	9534-4745-69	Condenser(Tantalum)(0.47μF/25V)	
TC	9372-2462-01	Thermistor(150-203-13004)	1

9000 (2071-200)
α 9000 (2071-400)
MAXXUM 9000 (2071-600)

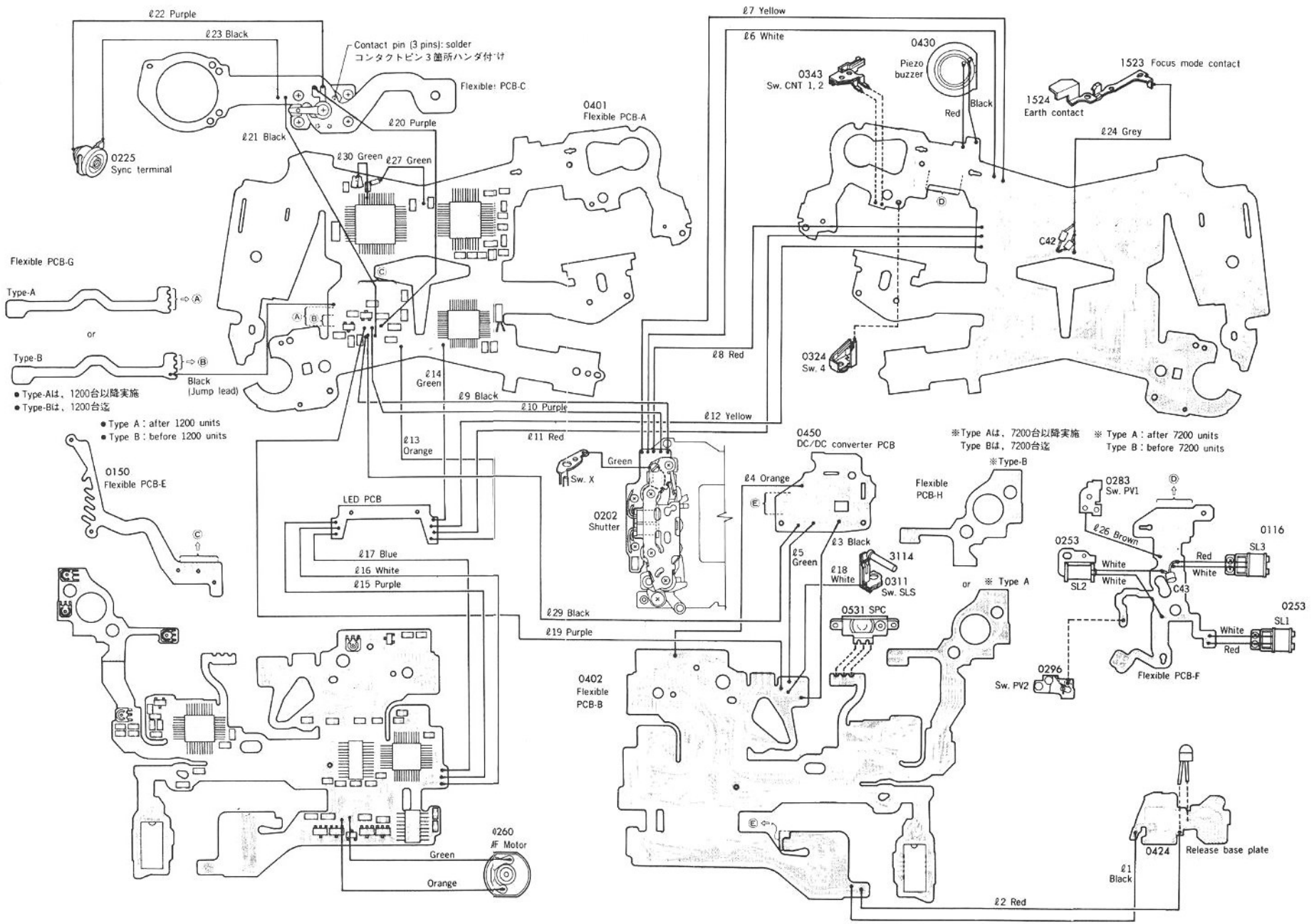

Lead wires list

Symbol	Part No.	Color	Type.		Qty.
ℓ1	9391-1807-00	Black	φ0.18/7	ℓ=155	1
ℓ2	9391-1807-02	Red	φ0.18/7	ℓ=175	1
ℓ3	9391-0807-00	Black	φ0.08/7	ℓ=55	1
ℓ4	9391-0807-03	Orange	φ0.08/7	ℓ=75	1
ℓ5	9391-0807-05	Green	φ0.08/7	ℓ=50	1
ℓ6	9391-0807-04	Yellow	φ0.08/7	ℓ=40	1
ℓ7	9391-0807-09	White	φ0.08/7	ℓ=40	1
ℓ8	9391-0807-02	Red	φ0.08/7	ℓ=35	1
ℓ9	9391-0807-00	Black	φ0.08/7	ℓ=70	1
ℓ15,ℓ10	9391-0807-07	Purple	φ0.08/7	ℓ=70	2
ℓ11	9391-0807-02	Red	φ0.08/7	ℓ=45	1
ℓ12	9391-0807-04	Yellow	φ0.08/7	ℓ=50	1
ℓ13	9391-0807-03	Orange	φ0.08/7	ℓ=45	1
ℓ14	9391-0807-05	Green	φ0.08/7	ℓ=40	1
ℓ16	9391-0807-09	White	φ0.08/7	ℓ=70	1
ℓ17	9391-0807-06	Blue	φ0.08/7	ℓ=65	1
ℓ18	9391-0807-09	White	φ0.08/7	ℓ=125	1
ℓ19	9391-0807-07	Purple	φ0.08/7	ℓ=105	1
ℓ22,ℓ20	9391-0807-07	Purple	φ0.08/7	ℓ=75	2
ℓ21	9391-0807-00	Black	φ0.08/7	ℓ=75	1
ℓ23	9391-0807-00	Black	φ0.08/7	ℓ=90	1
ℓ24	9391-0807-08	Gray	φ0.08/7	ℓ=100	1
ℓ26	9391-0807-01	Brown	φ0.08/7	ℓ=60	1
ℓ27	9391-0807-05	Green	φ0.08/7	ℓ=25	1
ℓ29	9391-0807-00	Black	φ0.08/7	ℓ=145	1
ℓ30	9391-0807-05	Green	φ0.08/7	ℓ=20	1

■Above lead wires are supplied per meter

■上記リード線の供給は1m単位とします。

No. 2071-001

SERVICE MANUAL SUPPLEMENTARY INFORMATION

Model **9000, α9000, MAXXUM 9000**

Code No. **2071-200, -400, -600**

■ AE adjusting

■ "AE adjusting" (Repair Guide p. 32) will be modified partly because of modification of IC_1.

As a servicing part, flex PCB-A set (2071-0401-01) with new IC_1 will be supplied after running out of that with previous IC_1.

To distinguish new IC_1 from previous one, see the number (*1) printed on IC_1.

*1 : Previous IC_1 : M50755-903
New IC_1 : M50755-907

■ AE adjusting

■Measuring instruments : Camera I/O tester 〈MODEL IO-5101〉
: Master lens 〈2072-0001-75〉
: Luminance source 〈MODEL L-2101, L-222, L-223〉

■Adjusting procedure

1. Set camera and measuring instruments as below:

■Fig. 1

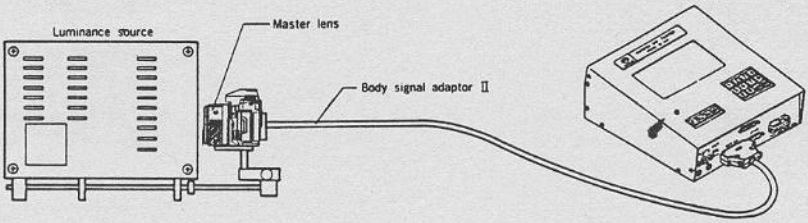

● Luminance source
K value : 1.3
LuminanceEv 10 (Ev 11+ND 50%)※

● Camera
ISO : 100
Exposure mode : A
Metering mode : See below
Aperture : 5.6
Focus mode : M

● I/O tester
DC-OUT : 3V

※ : Luminance in perentheses show the case of using luminance source L-222 or L-223.

2. Release the shutter until frame counter shows "1".

3. Push [7] key and then [ENT] key of camera I/O tester.

To be continued on next page.

✣This information should be filed additionally to Service Manual.

4. Push [1] or [2] key (※2) and then [ENT] key.

(※2 : [1] key for previous IC_1, [2] key for new IC_1)

- To distinguish new IC_1 from previous one, see the number printed on IC_1, or camera's body No. (below fig.)

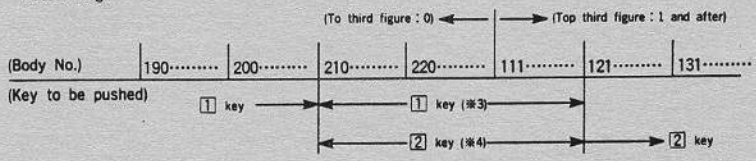

※3 : All 4 screws for tripod socket are black. (below fig.)

※4 : 2 screws for tripod socket are white, or painted white. (below fig.)

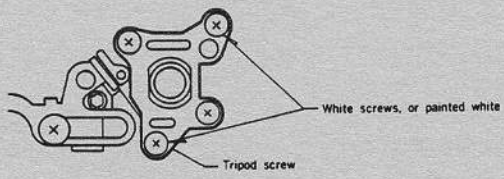

5. Set metering mode at AVERAGE.

6. Turn touch switch (or metering switch) ON.

1) Check if [✳] blinks at AVERAGE in LCD of camera I/O tester.

2) Turn VR_2 to display [OK] in LCD of camera I/O tester.

3) Check if LCD on camera body displays [30] of shutter speed.

7. Set metering mode at SPOT, turn touch switch (or metering switch) ON.

1) Check if [✳] blinks at SPOT in LCD of camera I/O tester.

2) Turn VR_{11} to display [OK] in LCD of camera I/O tester.

3) Check if LCD on camera body displays [30] of shutter speed.

8. Set metering mode at H, check if [✳] at H and [OK] display in LCD of camera I/O tester.

(If not, replace flexible PC board-A set with new one.)

9. Set metering mode at S, check if [✳] at S and [OK] display in LCD of camera I/O tester.

(If not, replace flexible PC board-A set with new one.)

■Fig. 2

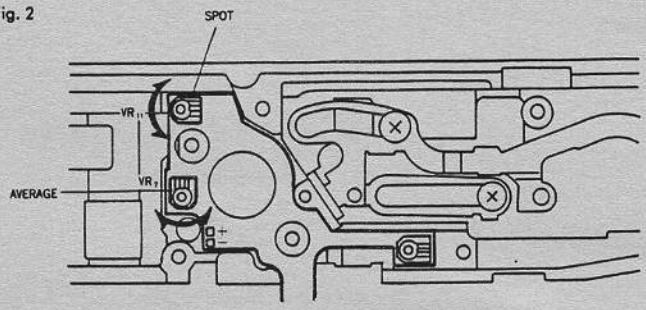

REPAIR

■ The contents of this manual are mainly related to the assembly and adjustment procedures for the 2071.

■ Since the procedures mentioned in this manual are for assembly they should be followed in reverse for disassembly.

■ Description of symbols

[G] : Grease

[O] : Oil

[B] : Adhesive

[A] : Anti-diffusion compound

[T] : Tool

■ Assembly and adjustment procedures

Page

[1] Winding gear base plate, Spool, Sprocket 1
■ Film reverse-running stopper, sprocket over-running stopper adjusting 2
[2] Back cover release plate, Flexible PC board D 3
[3] Shutter, Mirror box 4
[4] Charge cam, charge plate 5
[5] Battery grip, Eye-piece lens 6
[6] Flexible PC board assembling-1 7
[7] Flexible PC board assembling-2 8
[8] Counter base plate 9
■ Wiring diagram 10
■ Lead wire arrangement 11
[9] Front cover, Top cover 11
■ Preparation for adjusting 25
■ Body back adjusting 26
■ Finder back adjusting 27
■ Exposure adjusting
■ Position of resistor for exposure adjusting 28
■ Manual shutter speed, X delay time checking 29
■ Aperture ring position checking, adjusting 30
■ A/D converting reference voltage adjusting (1152mV) 31
■ AE adjusting 32
■ AE checking 33
■ Strobo level adjusting 34
■ AF checking, Adjusting
■ AF operation checking 36
■ Preparation for AF adjusting 36
[1] AF area adjusting 38
[2] Mz checking 38
[3] Pitch adjusting 39
[4] Yaw adjusting 40
[5] Pitch, Yaw checking 40
[6] AF area checking 40
[7] EZ adjusting 41
[10] Bottom cover (completion) 12

Page

■ Block assembling
■ Mirror box assembling ..... 13~17
■ Mz adjusting 15
■ AF coupler adjusting 18
■ Aperture control base plate assembling 19
■ Winding gear base plate assembling 21
■ Top cover assembling 23
■ LCD holder assembling 24
■ Front cover assembling 24
■ Replacing procedure 42
1. Flexible PC board A replacing 43
2. Mirror box removing 48
3. Mirror box installing 52
4. Flexible PC board B replacing 58
5. AF motor set replacing 60
6. Winding gear base plate replacing 62
7. In-finder LCD replacing 68
8. Main mirror replacing 70
■ Measuring instruments, Tools, Subsidiary materials 71

■ Precautions

■ The following precautions must be taken concerning all plastic parts.

1. When cleaning, use Flonsolve or alcohol. Do not use thinner, ketone, ether etc.
2. Secure all parts with the specified screws, taking care not to exert excessive stress to them.

■ Handling of the Flexible PC board

The flexible PC board uses MOS ICs and is very sensitive to static electricity. Therefore, the following points must be kept in mind when repairing.

- When handling the flexible PC board itself or wiring it to the body, use a conductive mat to prevent static electricity, and perform all work as shown below.

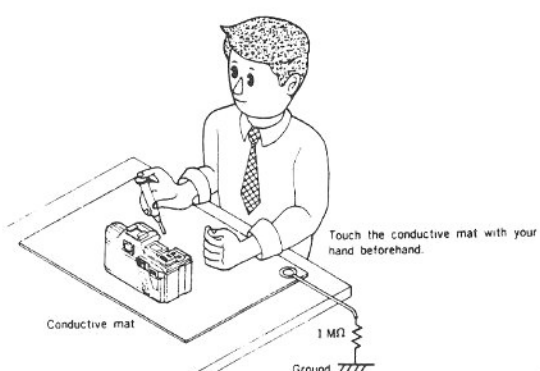

■ When grounding is impossible, connect the cable to a large metal plate (steel desk or shelf).

Table for special screw

Example

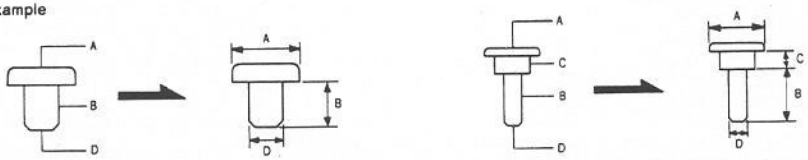

2071-1044 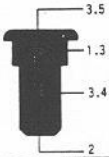	2071-1045	2024-1344 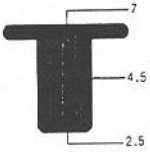	2071-5054	2071-9001
2017-9001 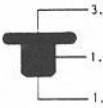	2072-9002	2071-9004 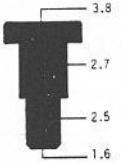	2071-9007 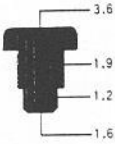	2071-9107 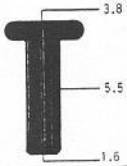
2071-9108 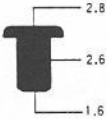	2071-9110 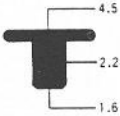	2071-9111 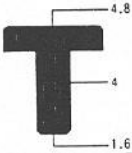	2071-9112	2071-9113
2072-9113	2071-9115 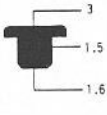	2071-9119	2072-9120	2071-9122 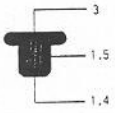
2071-9125	2071-9126 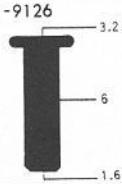	2071-9127	2071-9128 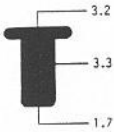	2006-9128 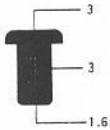
2071-9129	2005-9148	2005-9179		

1 Winding gear base plate, Spool, Sprocket

■ Assemble the parts in order of ❶ – ❾.

■ After assembling, install film advance lever, perform the adjusting described on next page.

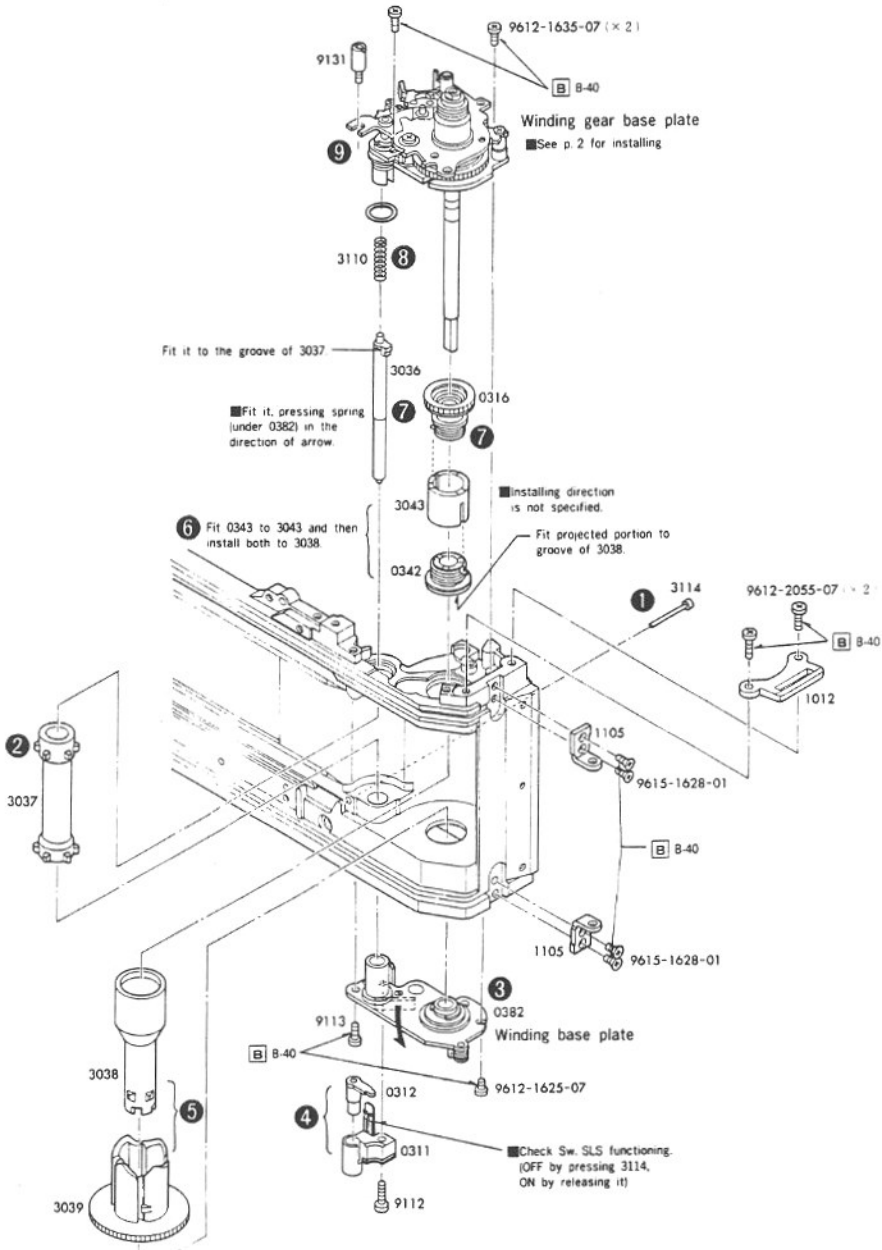

Film reverse-running stopper, sprocket over-running stopper adjusting

Film reverse-running stopper adjusting

1. Applying load forcedly by finger to sprocket, wind up strongly. In this state, turn eccentric pin to adjust mechanical timing so that 0313 engages by 1st tooth of reversing prevention lever-B → 0313 engages by 2nd tooth when removing finger from sptocket. (See Fig. 1.)

Fig. 1

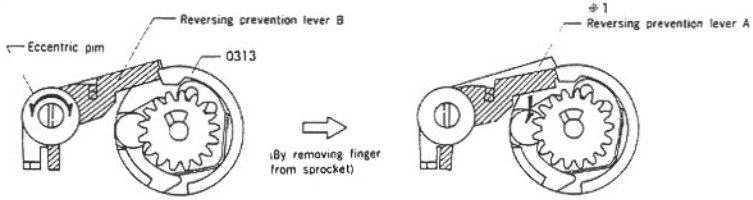

※1 : 0313 should not be engaged by 2nd tooth of reversing prevention lever-A, in this adjustment.

Sprocket over-running stopper adjusting (Beforehand, complete adjusting of film reverse-running stopper.

1. In completion of winding, rotate sprocket by finger in the direction of winding and engage 0313 by reversing prevention lever-A, -B. (Fig. 2)
2. Rotate sprocket reversely to engage 0313 by reversing prevention lever-A, and hold sprocket. (Fig. 3) In this state, turn eccentric pin to make clearance "0" between over-run prevention lever (0353) and over-run prevention cam (Fig. 3).

Fig. 2

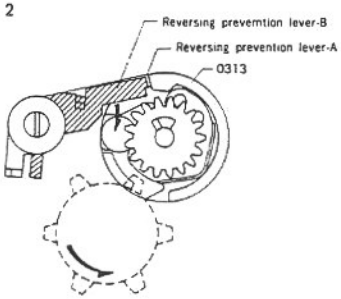

Fig. 3

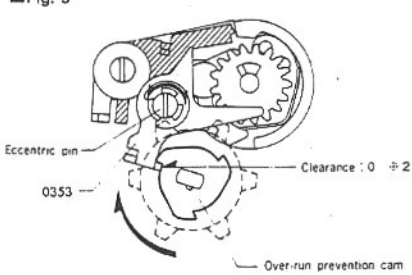

※2 : Over-run prevention lever should not be pressed by 0353.

- **Check after adjusting**

When winding film-advance lever up strongly until it stops, there should be a certain clearance between 0353 and over-run prevention cam.

Checking of function

1. By pressing winding stop lever-B in the direction of "⇨" in the state of fig. 4, Sw. 4 and levers should be functioned in the direction of "→" and winding should be possible.
   By completion of winding, winding mechanism should be set as fig. 4.
2. When winding, pressing multiple-exposure spring (3075) in the direction of "⇢", spool and sprocket should not be rotated.
   When winding without 3075 pressing, spool and sprocket should be rotated normally.

Fig. 4

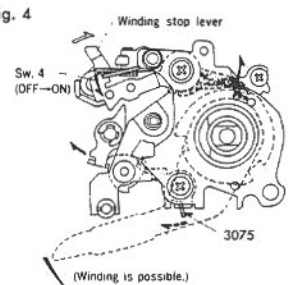

2 Back cover release plate, Flexible PC board D

■Assemble the parts in order of ❶–❽.

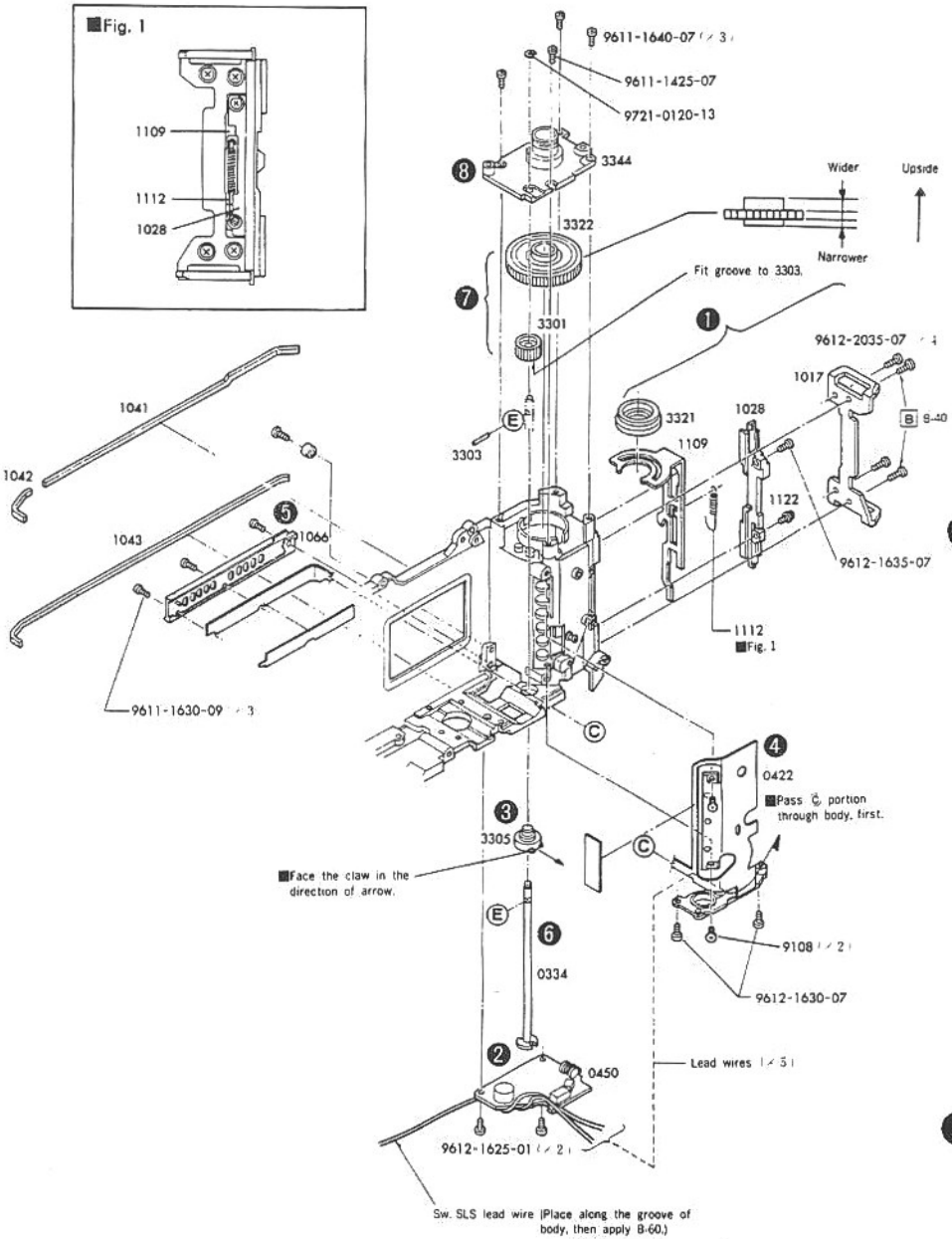

3 Shutter, Mirror box

9612-1630-07 (× 4)

Penta holder set

(× 2)
5061 (0.2mm)
5062 (0.25mm)
5063 (0.3mm)
5064 (0.35mm)
5065 (0.4mm)

■Both parts should have same thickness.

9612-2035-07 (× 2)

9611-2040-09

2005-9148

9611-2040-09

Shutter set
■Never disassemble.

■Never hold other places than marked

Mirror box set

1045

1044

■Install it with mirror charge condition. (Fig. 1)
■See p. 13 for assembling.

1044

9612-2035-07

9612-2055-07

■Tighten screws in alphabetical order of ⓐ–ⓖ.

■Install mirror box to body, keeping flexible PC board-H set free as shown. After installing, adhere flexible PC board-H set to body, using double-faced tape. (Fig. 2)

■Fig. 1

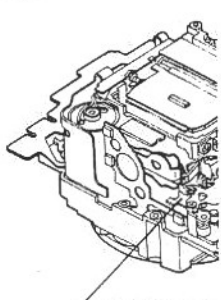

■Fig. 2

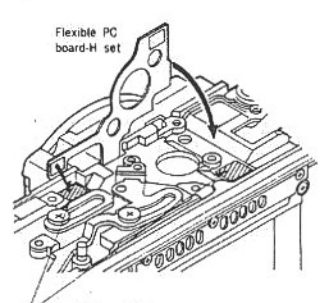

4 Charge cam, Charge plate

■Assemble the parts in order of ❶–❻.

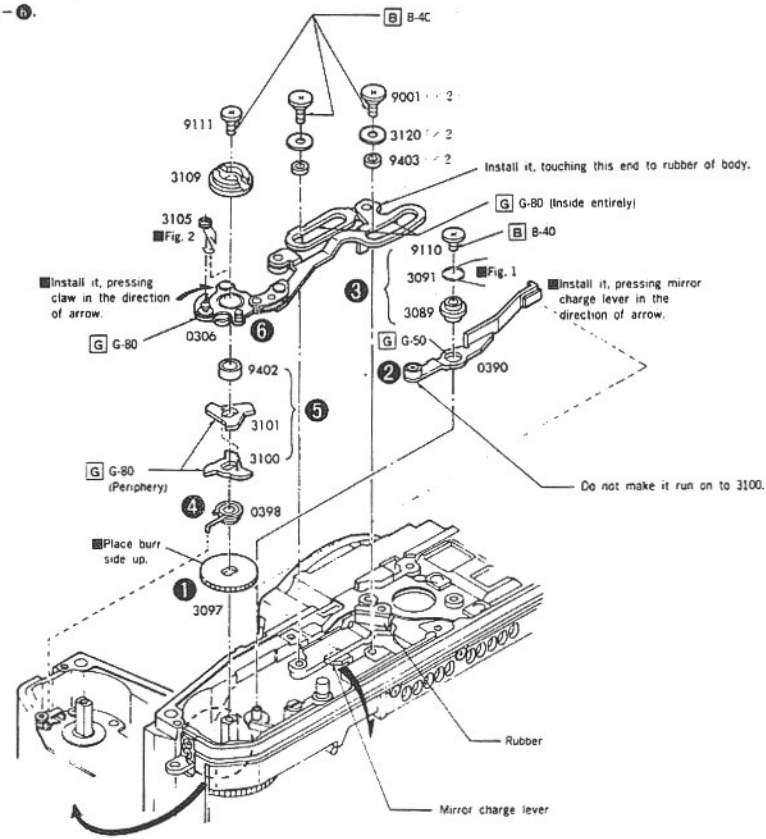

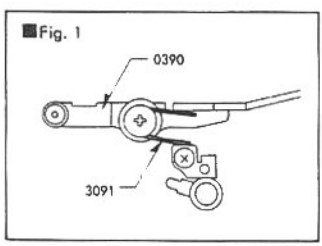

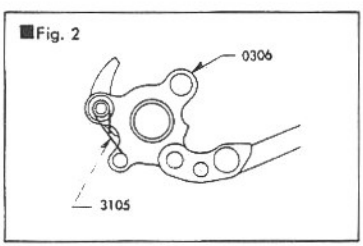

5 Battery grip, Eye-piece lens

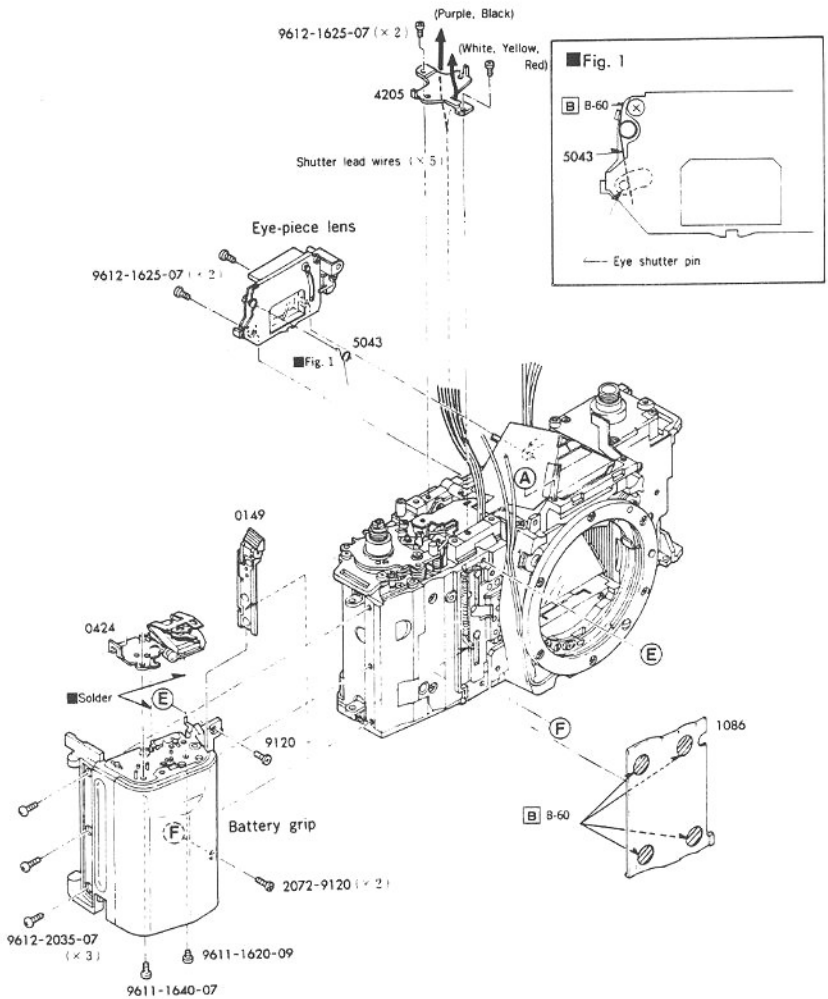

6 Flexible PC board A assembling-1

■When replacing flexible PC board-A set, re-install C_{42} on new flexible PC board.
(See p. 28 for installing direction···same as it was installed.)

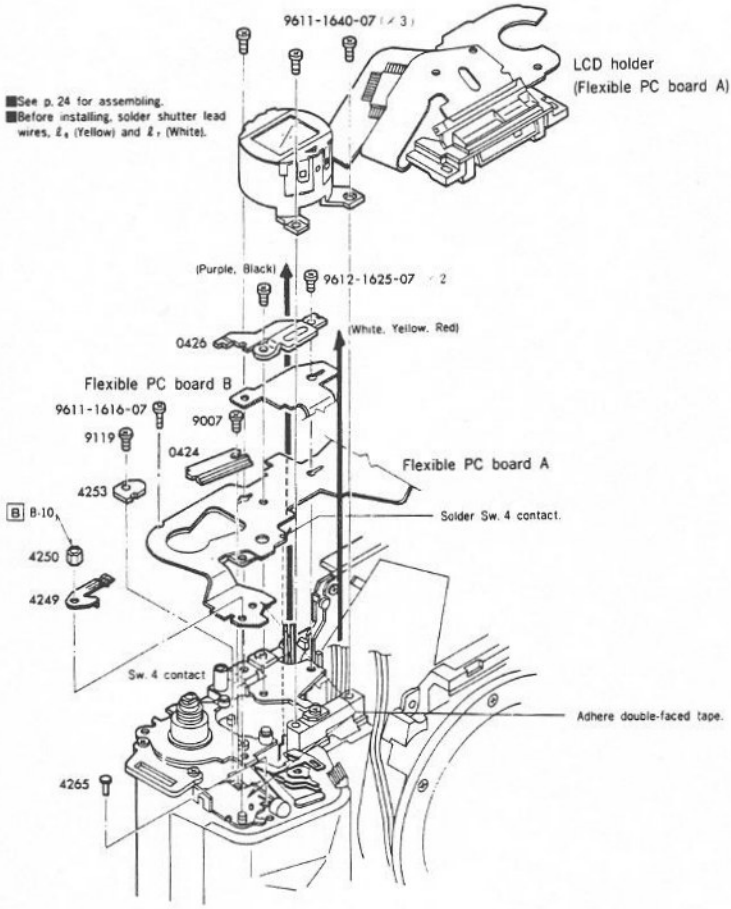

7 Flexible PC board A assembling-2

■Assemble the parts in order of ❶–❼.

■Lead wire arrangment (See p. 11)

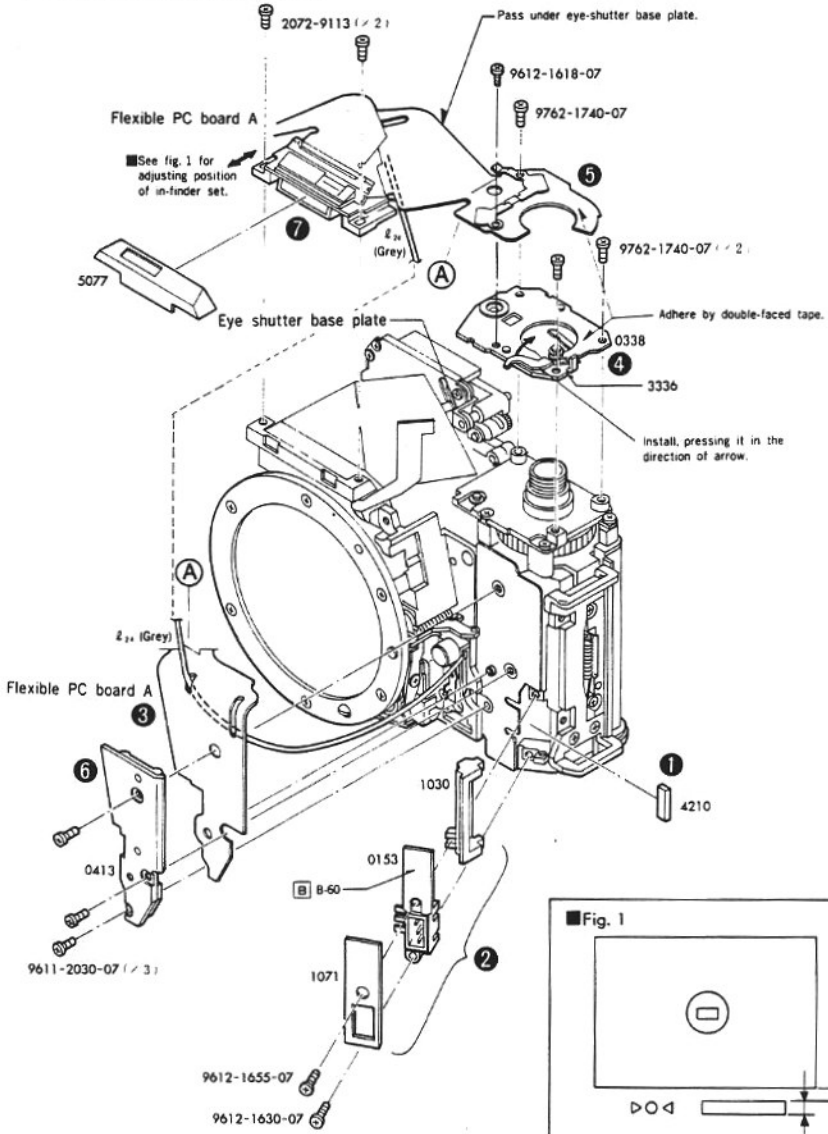

■Fig. 1

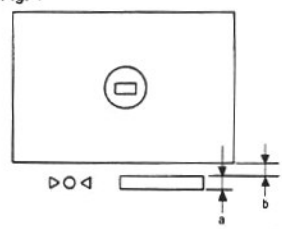

Adjust in-finder set in order that "b" meets the range "0.3a-1.5a".

8 Counter base plate

■Assemble the parts in order of ❶–❸.

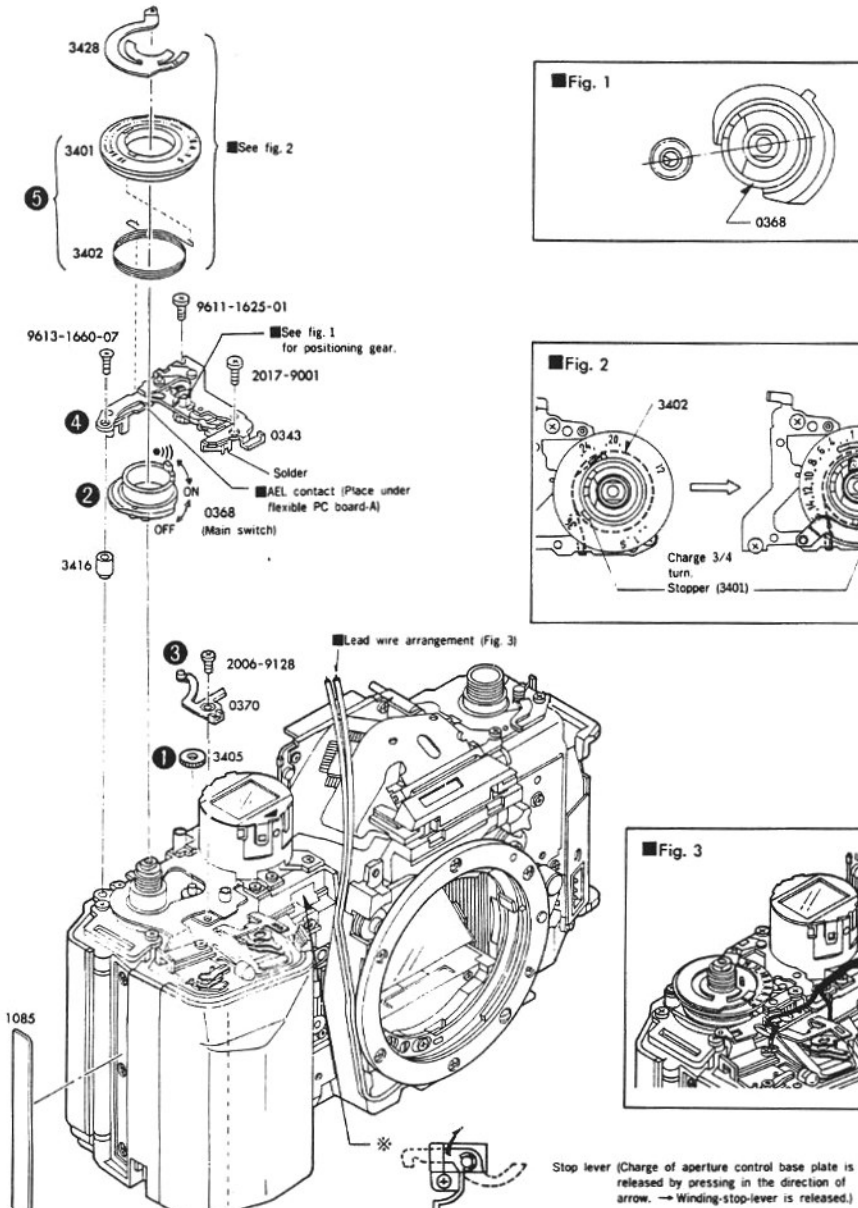

■After assembling, solder the remaining lead wires. Set back cover, lens and batteries (or power supply adapter.). Wind and check that shutter releases, indication and AF function.

※ : Before initial winding, press the stop lever in the direction of arrow.

9000 (2071-200)
α 9000 (2071-400)
MAXXUM 9000 (2071-600)

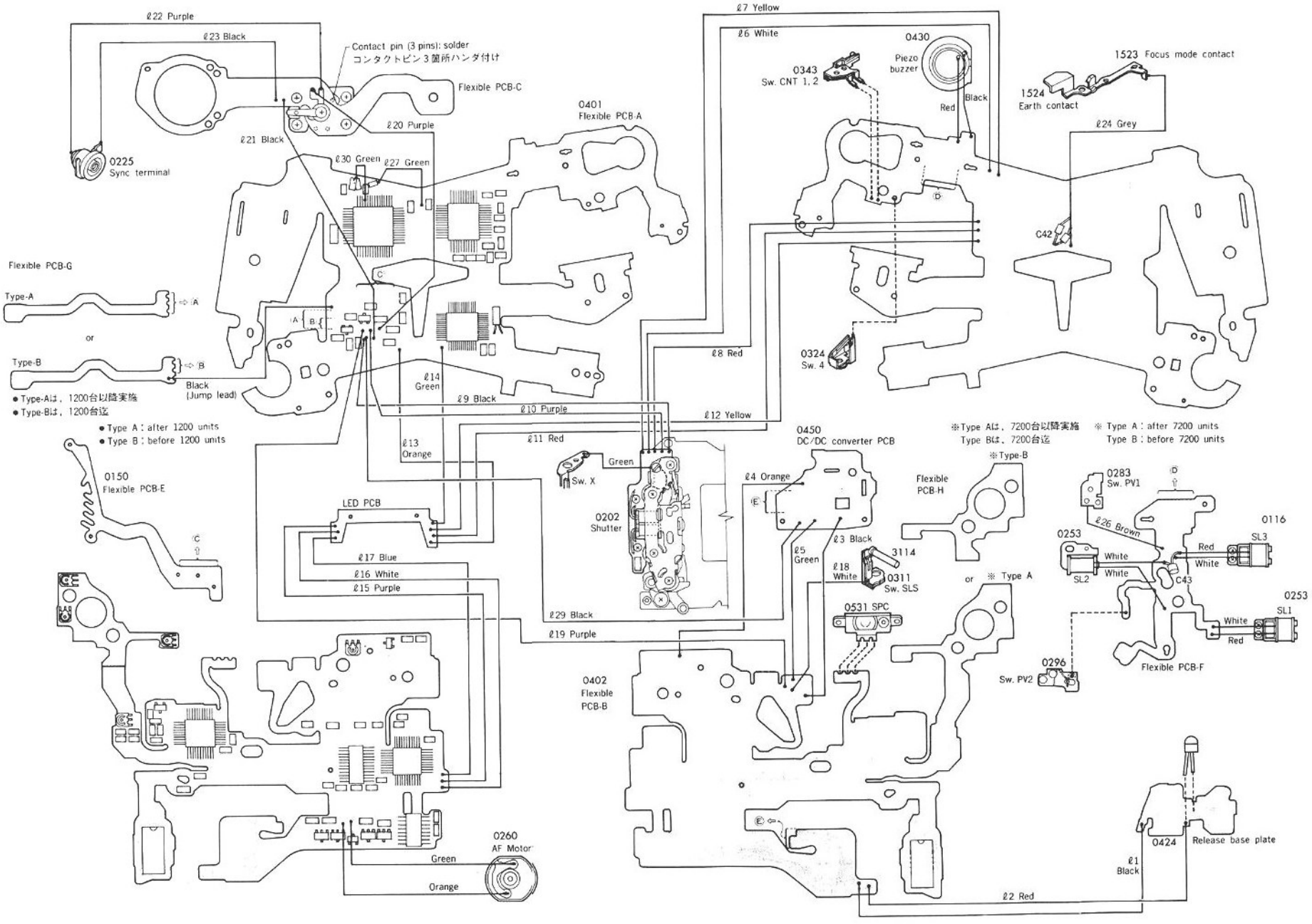

■ Lead wire Arrangement

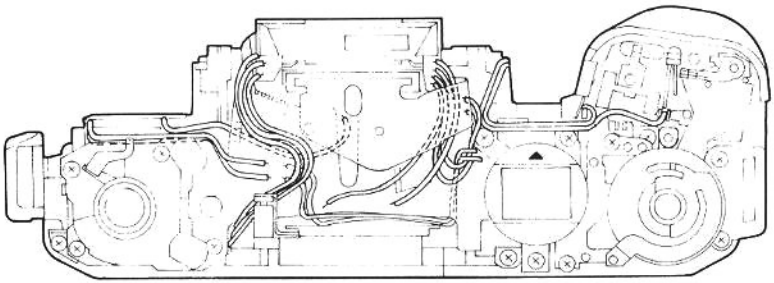

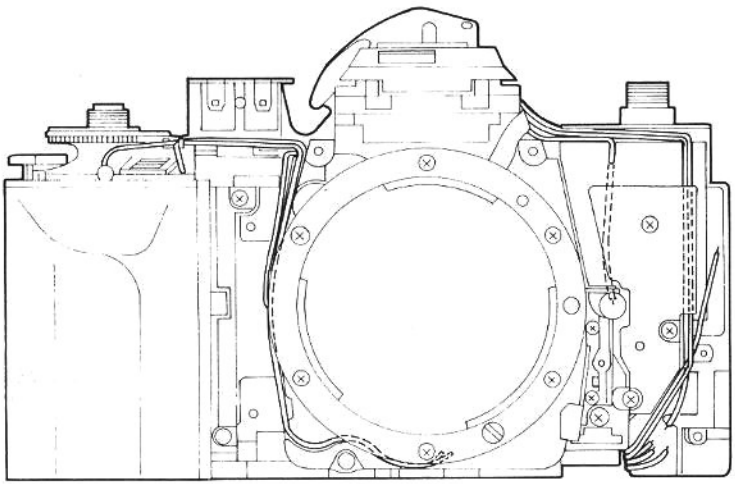

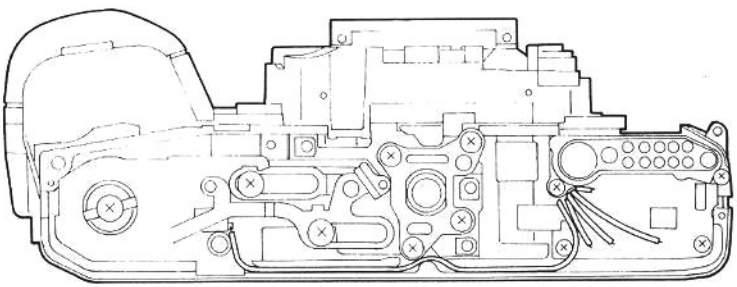

9 Front cover, Top cover

■After assembling the parts ❶–❹, install top cover.

■After assembling the parts on this page, perform the adjusting of p. 25-35. Then, install bottom cover on next page.

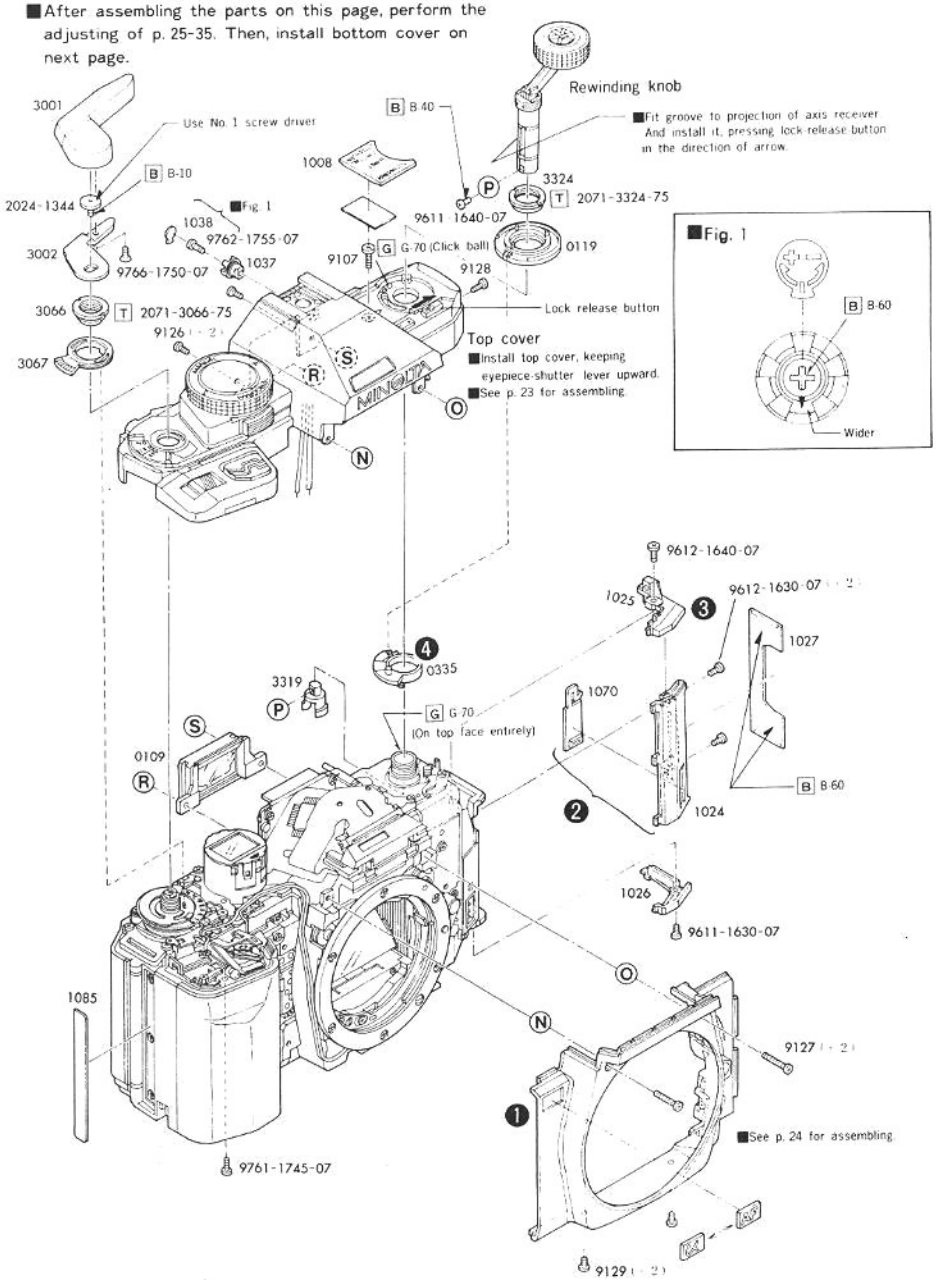

10 Bottom cover (completion)

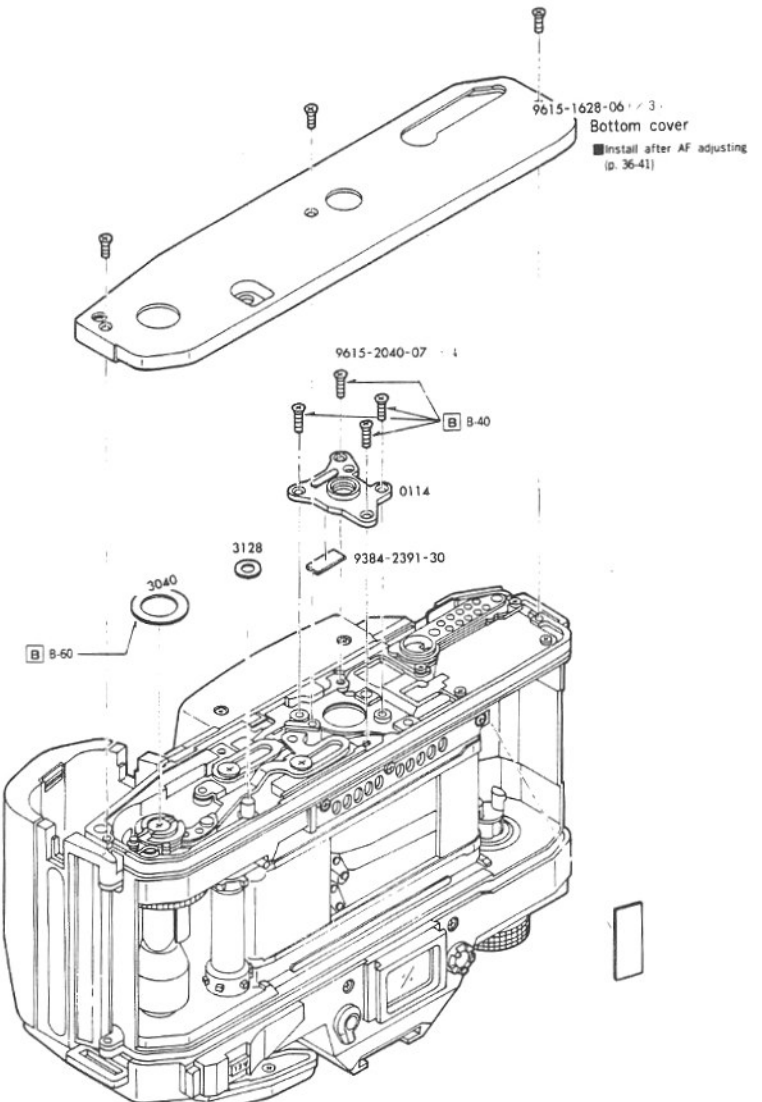

Mirror box assembling-1

■Install AF drive set (0260), flare shield plate (5167), first. Then instlal flexible PC board-B, set, following the "installing procedure" below.

■When replacing flexible PC board-B set or mirror box, perform MZ adjusting on p. 15.

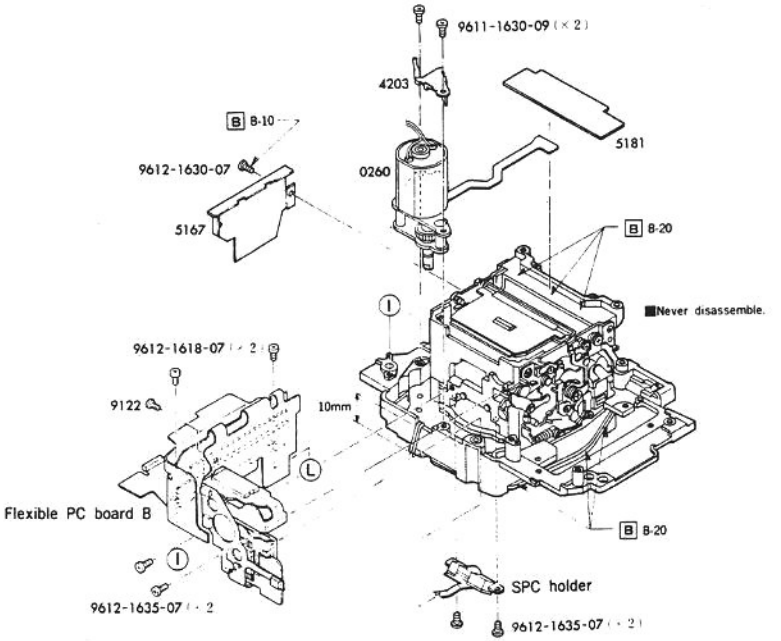

■ Installing procedure of flexible PC board-B

1. Bend flexible PC board-B set in the direction of arrow. (Fig. 1)
   Adhere spacer using double-faced tape. (Fig. 2)

■Fig. 1

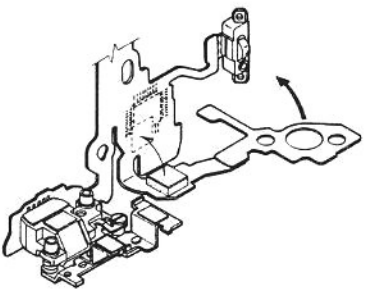

■Fig. 2

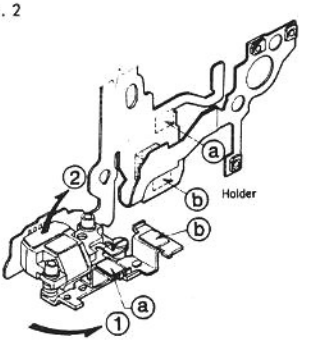

2. Bend flexible PC board-B set in order of ①–② (Fig. 2). Adhere ⓐ, ⓑ of flexible PC board to ⓐ, ⓑ of holder, using double-faced tape. (Fig. 3)

■Fig. 3

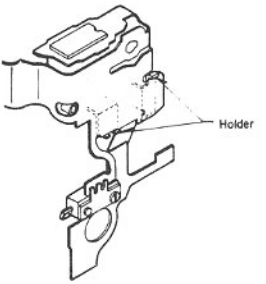

3. ① Bend flexible PC board-H set. (Fig. 4)
   ② Pass SPC holder through hole Ⓐ and tighten screw.
   ③ Pass marked " ▨ " part of flexible PC board-B set through the clearnace between AF motor and mirror box. Tighten screw on AF sensor module.
   (Set Ⓨ of flexible PC board to Ⓨ of mirror box.)

■Fig. 4

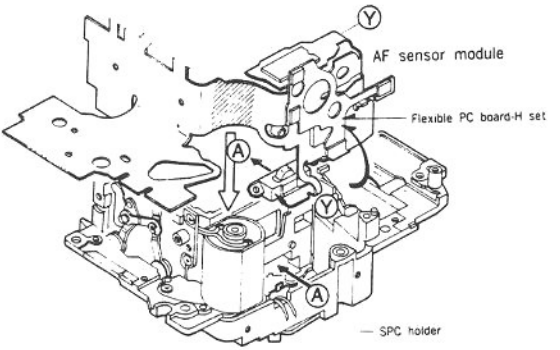

4. Fix flexible PC board by 9112. Solder motor lead wires (Orange, Green). (Fig. 5)
5. Bend flexible PC board in the direction of arrow ①. (Fig. 5) Tighten screws on holder. Then bend flexible PC board in the direction of arrow ②. Adhere it, to AF motor, using double-faced tape. Solder lead wires (Red, Black).

■Fig. 5

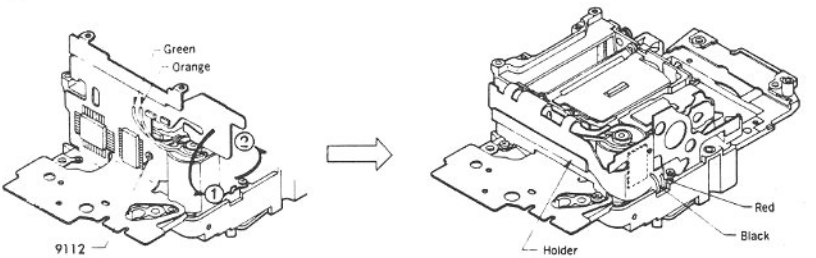

■MZ adjusting

■When replacing flexible PC board-B set and mirror box, perform MZ adjusting.

1 MZ adjusting……Adjustment of CCD of image sensor positioning (Selection for collar and washer)

■Fig. 1

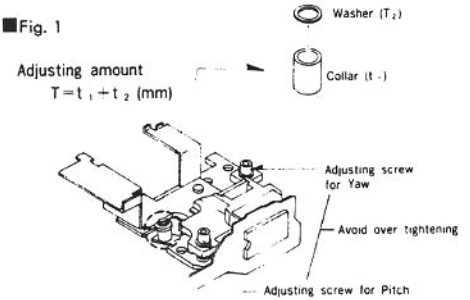

■Table 1

Collar		Washer	
Part No.	Thickness (t_1)	Part No.	Thickness (t_2)
2071-5091-01	2.5 mm	9790-2140-40	0.05 mm
2071-5092-02	2.9	9791-2140-40	0.1
2071-5093-01	3.3	9792-2140-40	0.2
———		9793-2140-40	0.3

■If needing flexible PC board-B set replacement

Calculate the difference (R) between correction value printed on previous and new flexible PC boards. Obtain required adjusting amount (T) by method of addition or subtraction (※1) of R to/from previous adjusting amount. Then select proper thickness of collar and washer to meet T.

■If needing mirror box replacement

Calculate the difference (R) between correction values of previous mirror box (※2) and new mirror box (Fig. 2). Obtain required adjusting amount by method of addition or subtraction (※1) of R to/from previous adjusting amount.

Then select proper thickness of collar and washer to meet required adjusting amount.

■If needing flexible PC board-B set and mirror box replacement

Add correction values of flexible PC board-B set and mirror box (※2) (if "−" (minus sign) is given on correction value of mirror box, subtract the printed value (absolute value) from correction value of flexible PC board-B set) to obtain required adjusting amount.

Then select proper thickness of collar and washer to meet required adjusting amount.

※1 : Correction value of previous PC board > new PC board's……Subtraction
Correction value of previous PC board < new PC board's……Addition

※2 : Value subtracted correction value of previous flexible PC board-B set from previous adjusting amount (T).

■Fig. 2

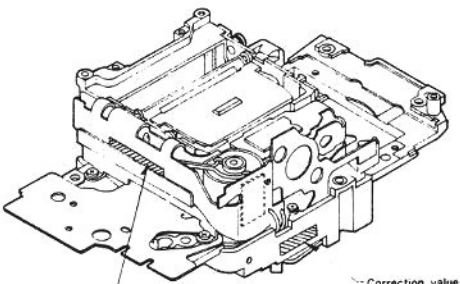

Correction value of mirror box… value (Red) is given for servicing part (Consider number of second decimal place as 5 (, 5) regardless of number given.)

■ Mirror box assembling-2

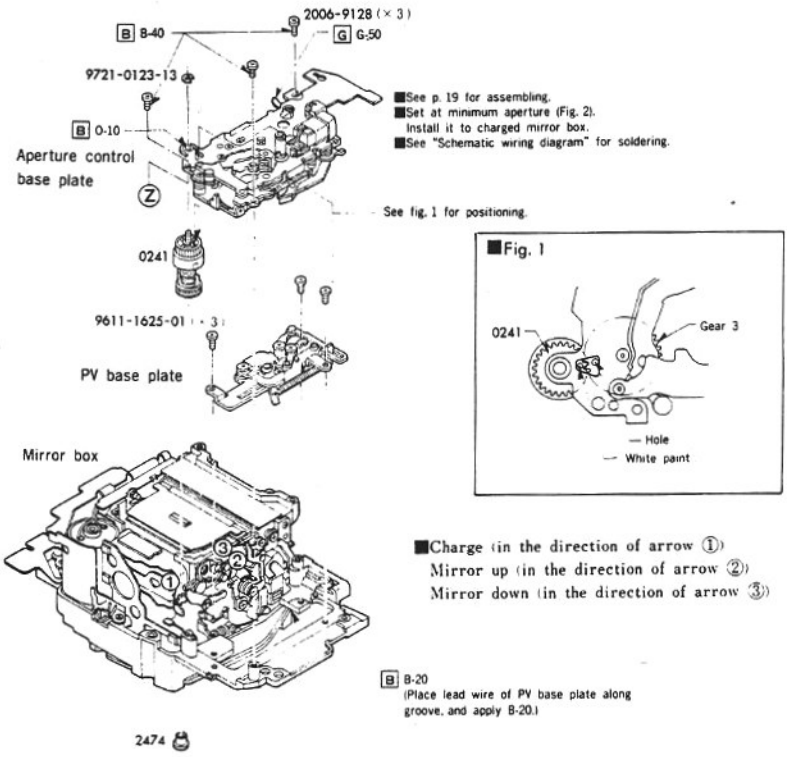

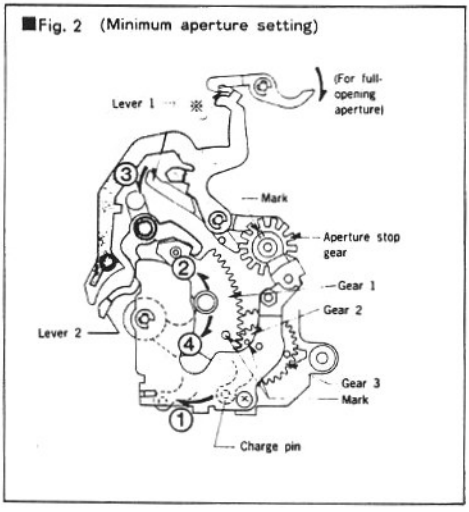

Minimum aperture setting

1) Press charge pin in the direction of arrow ①, hold it.
2) Press roller of gear 1 in the direction of arrow ②, engage gear 1 with lever 2.
3) Press lever 1 in the directiok of arrow ③, disengage aperture stop gear.
4) Press roller of gear 1 slightly in the direction of arrow ④. Engage first claw of aperture stop gear with lever 1.
……Minimum aperture setting.

Checking of gear position of minimum aperture setting.

Marks "■" and "○" should be positioned as fig. 2. If not, replace aperture control set (0253).

※After installing mirror box, keep engaging until the completion of assembling ⑪ on next page.

Mirror box assembling-3

■Assemble the parts in order of ❶–⓭.

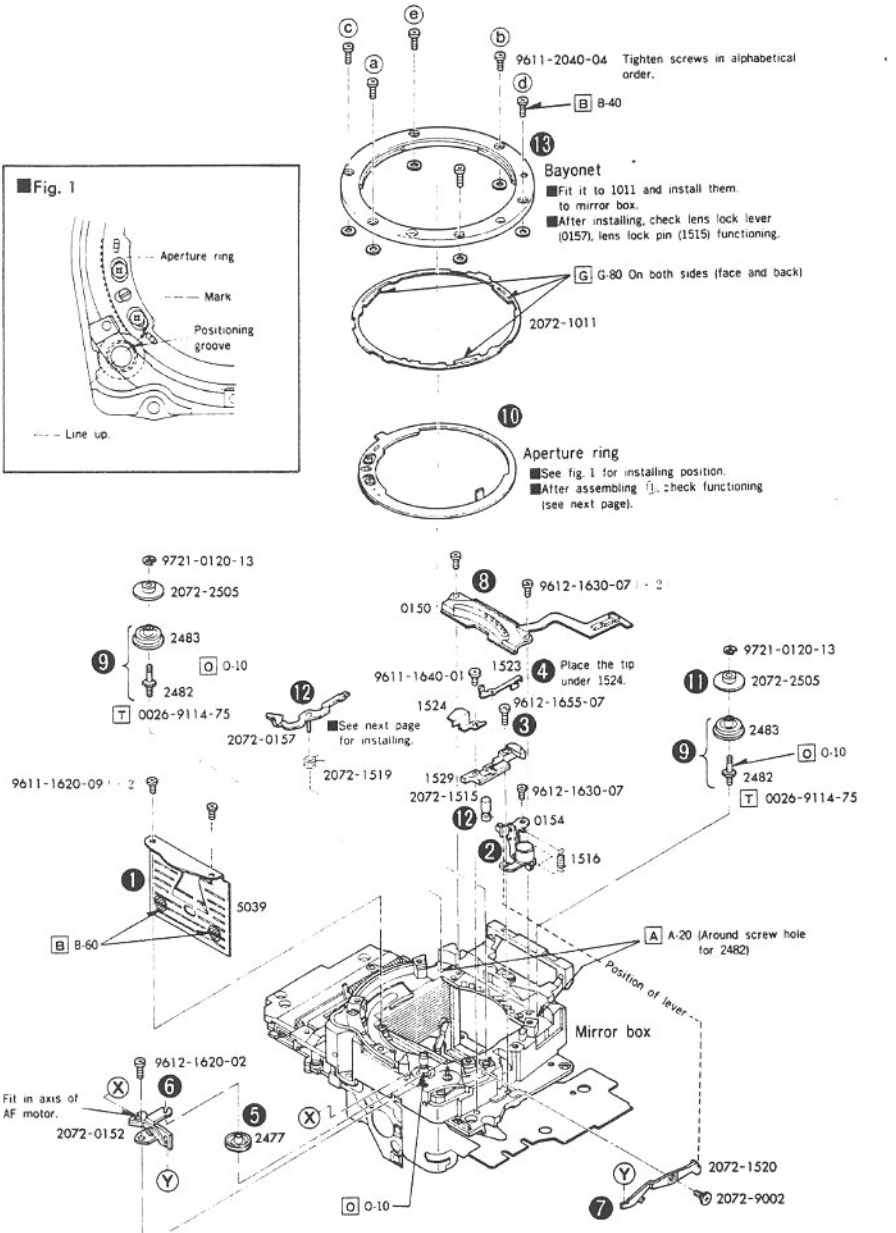

Checking of aperture ring functioning

■Fig. 2

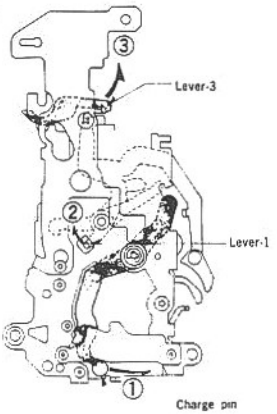

1) Press charge pin in the direction of arrow ①.
   - Aperture ring should move back to max. aperture side.
2) Press lever 1 in the direction of arrow ②.
   - Aperture ring should move to minimum aperture setting.
3) Press lever 3, in the direction of arrow ③.
   - Aperture ring should move back to maximum aperture side.
   - Aperture ring should be moved smoothly by hand.

Installing of lens lock lever (0157)

■Fig. 3

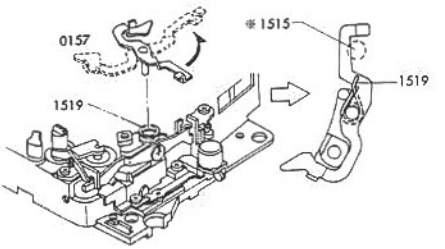

※ : After installing 0157, set lens lock pin (1515) for holding 0157.

AF coupler adjusting

■Checking procedure

1. Press lock release button. AF coupler should not projected from bayonet lens mount when lens lock pin is lower than bayonet lens mount.
2. When lens is locked by pressing lens lock lever set in the direction of arrow, AF coupler is projected $1.6^{+0.2}_{0}$mm from bayonet lens mount.

■Adjusting procedure

Turn eccentric screw in order to satisfy above "checking procedure" 1 and 2.

■Fig. 4

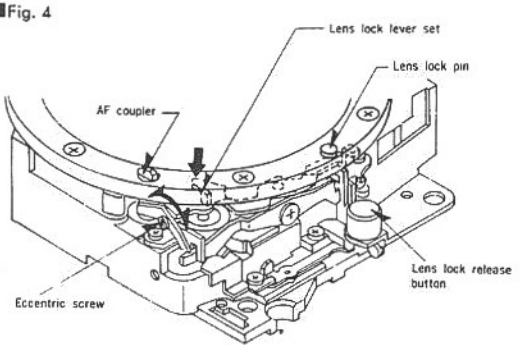

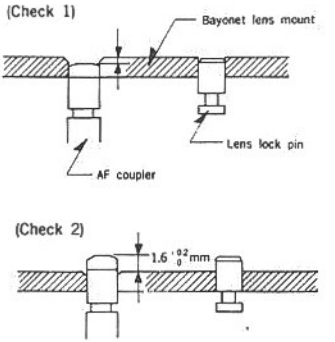

Aperture control base plate assembling

■Assemble the parts in order of ❶–⓫.

■After assembling, check minimum aperture, full-opening aperture setting, and gear positioning. (See fig. 2 on p. 16.)

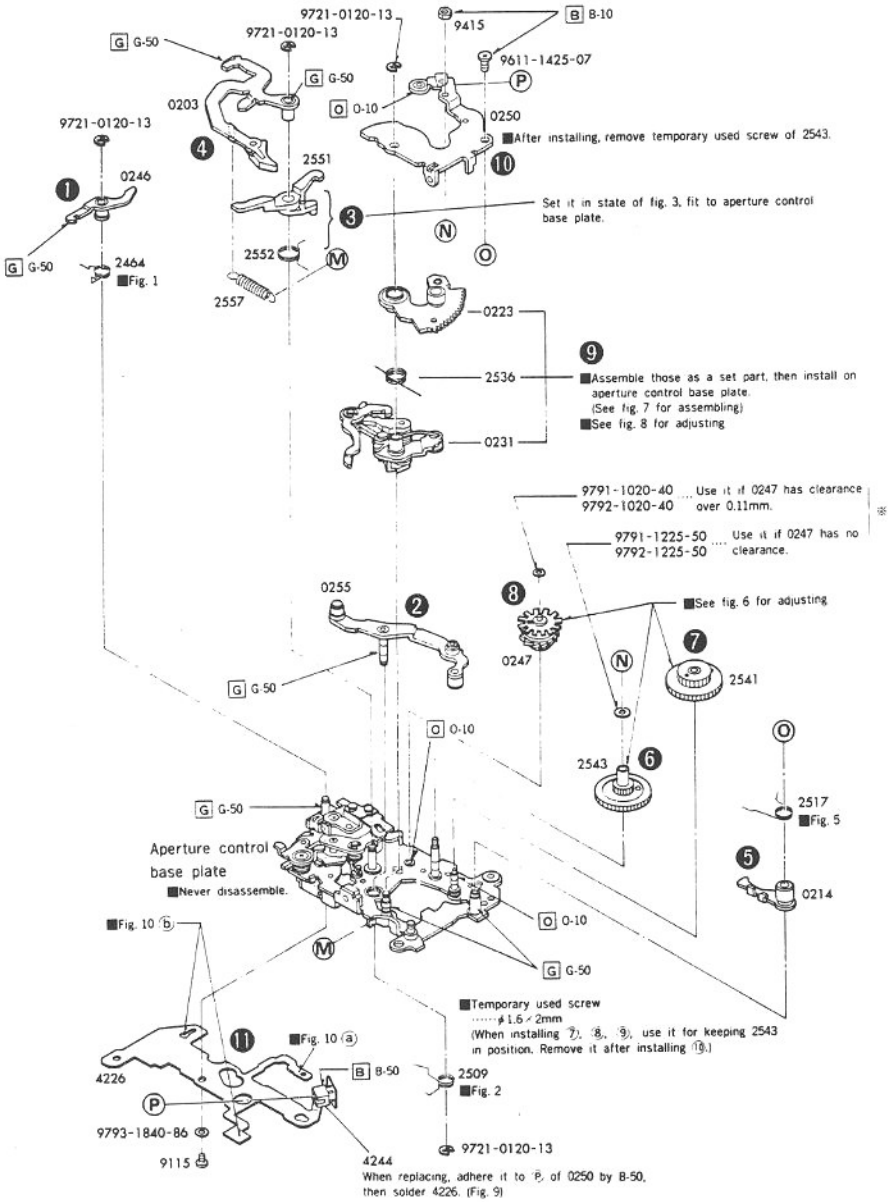

※ : After installing 0250, check the looseness (clearance) of 0247. If clearance is out of range (0 < clearance < 0.11mm), use proper washer.

■Fig. 1

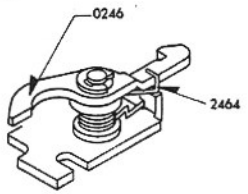

■Fig. 2

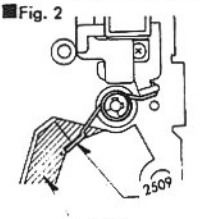

■Fig. 3

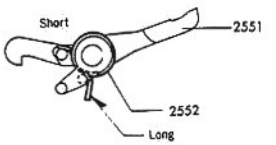

■Fig. 4

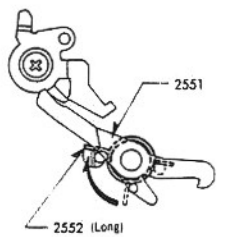

■Fig. 5

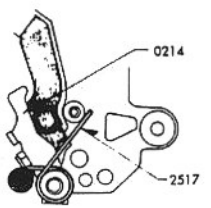

■Fig. 6

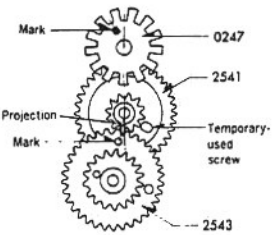

■Fig. 7 ① Place 2536. ② Set 0231 and hook 2537. ③ Engage 0231 with 0223.

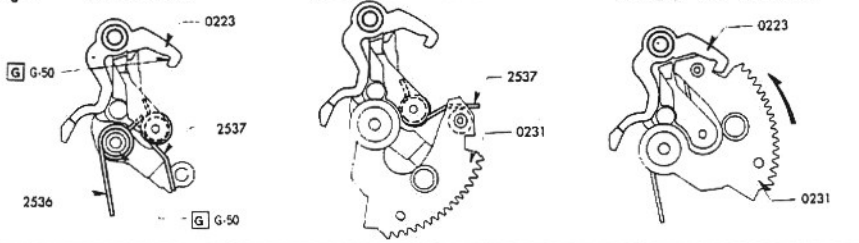

■Fig. 8

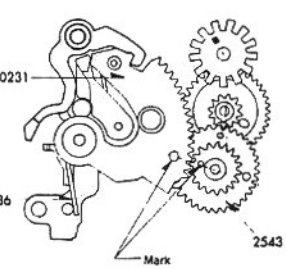

■Fig. 9

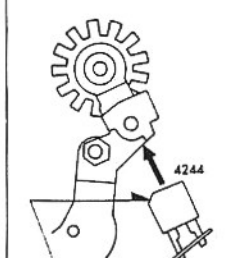

■Fig. 10

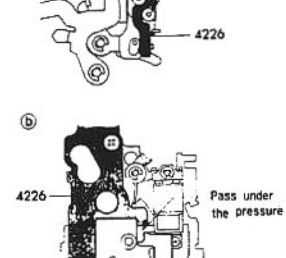

Winding gear base plate assembling

■Assemble the parts in order of ❶–⑩. (For easier assembling, place 0324 on body.)

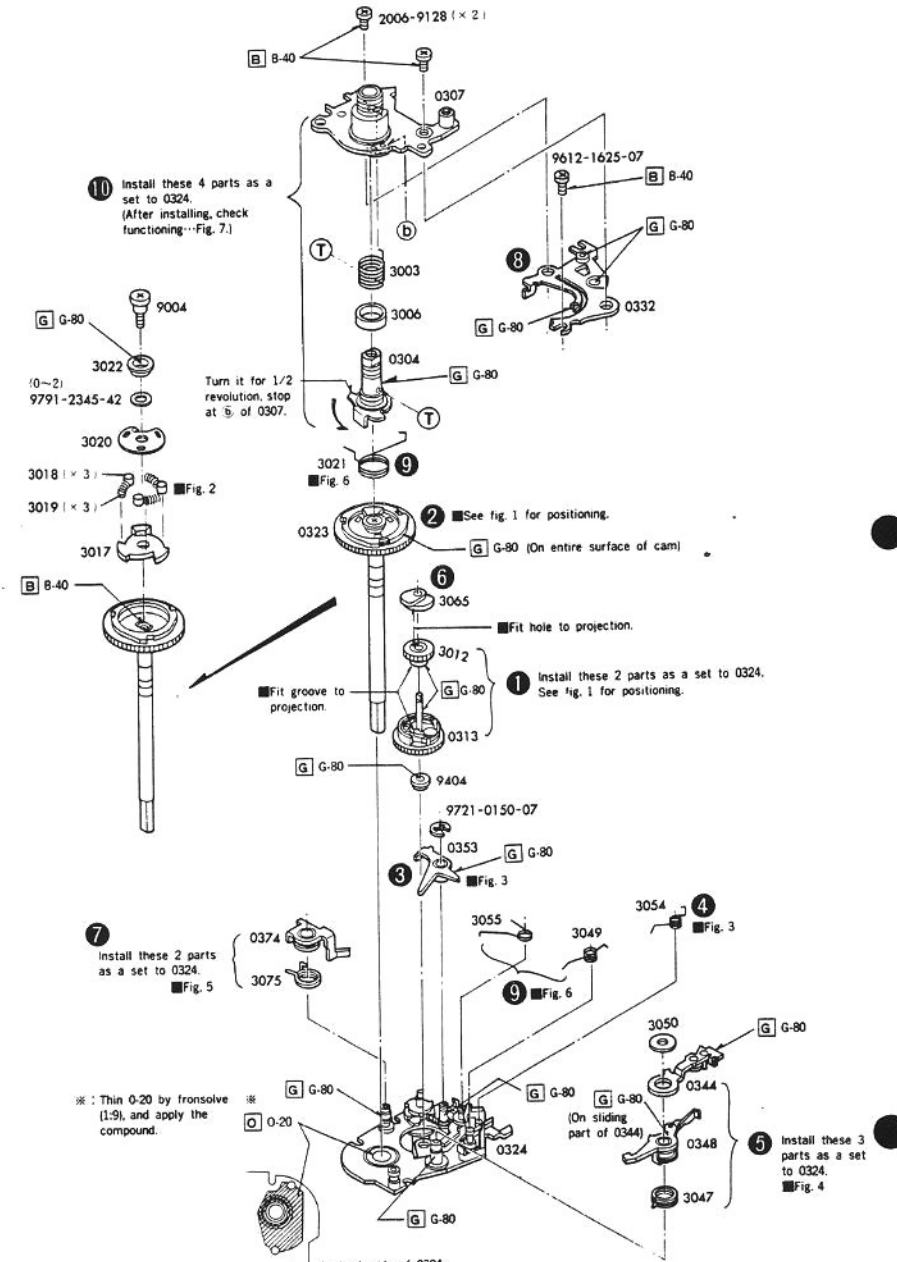

■Fig. 1

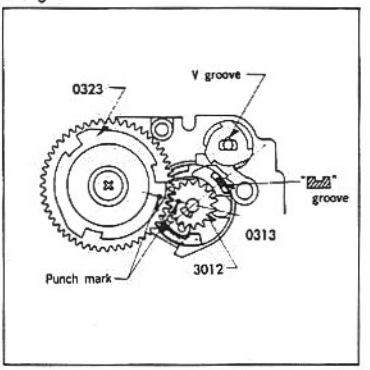

■Fig. 2

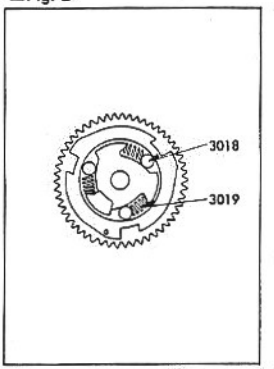

■Fig. 3

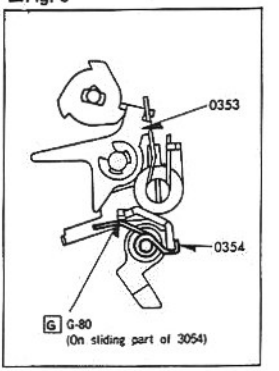

■Fig. 4

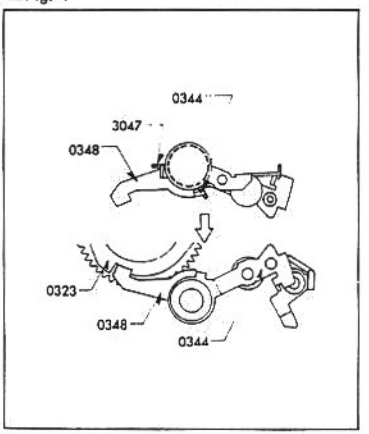

■Fig. 5

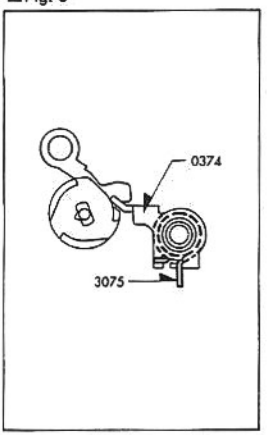

■Fig. 6

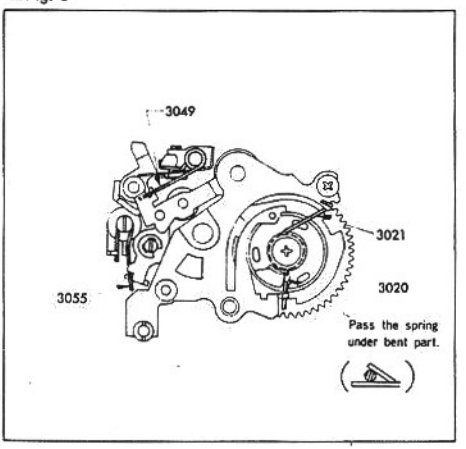

■Fig. 7

By pressing winding-stop-lever B in the direction of arrow (⇨), levers and switches should move in the direction of arrow (➡).

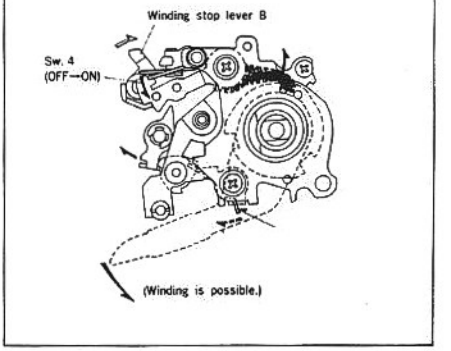

Top cover assembling

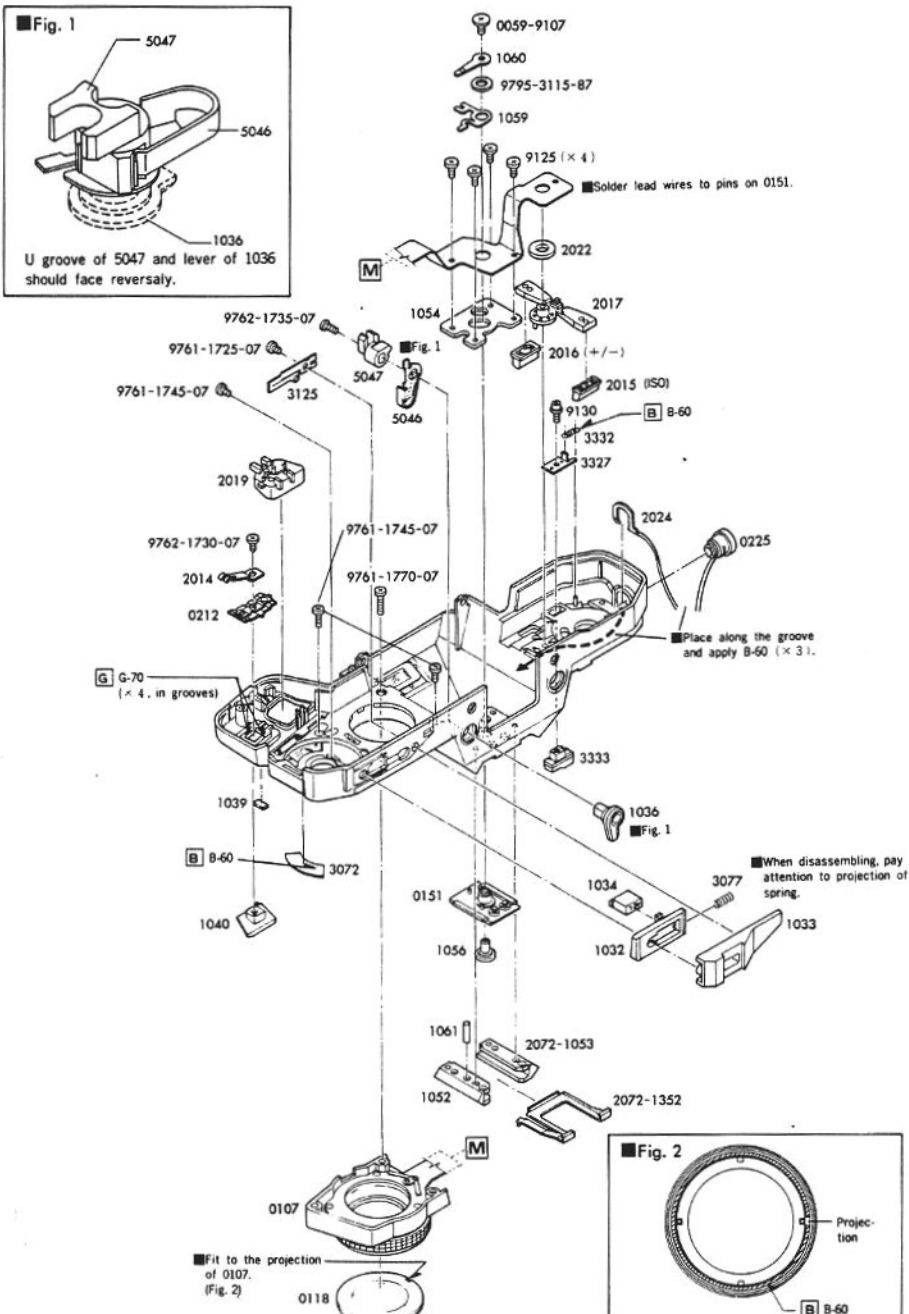

■ LCD holder assembling

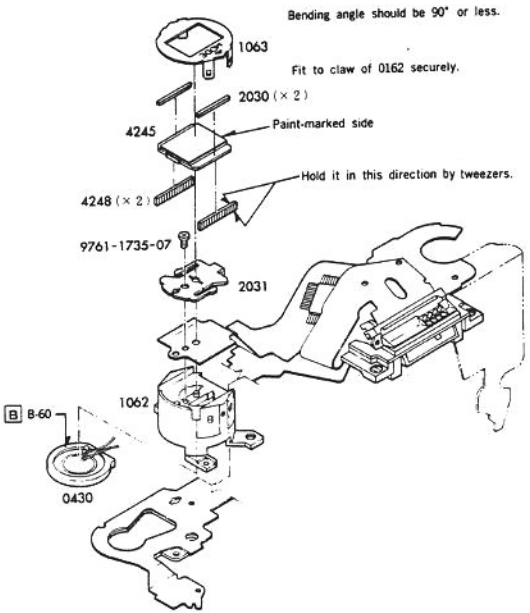

■ Front cover assembling

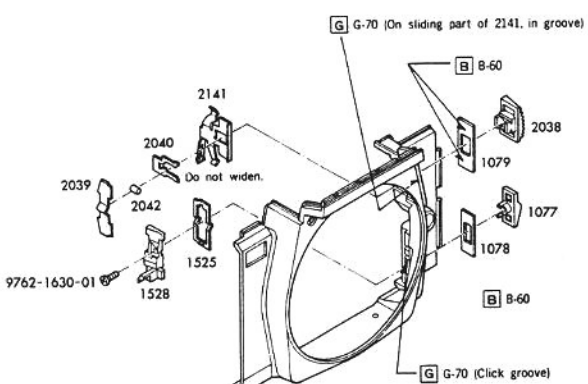

Preparation for adjusting

■Before adjusting, put the camera into the condition as below, check the body functioning.

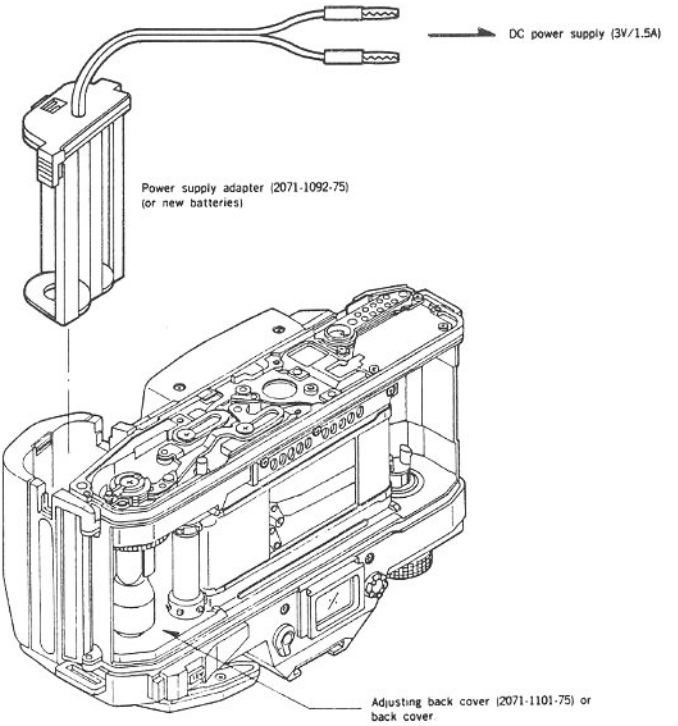

- Winding, shutter operation.
- Switch operation after completion of initial loading.
  (Exposure mode selector, Metering selector, Film speed key (ISO), Exposure adjustment key (+/−), Aperture up/down control, Shutter up/down control)
- Metered value change to luminance change.
- AF operation.
- Preview switch operation.

See Trouble-shooting chart for irregular functioning.

■ Body back adjusting

■Measuring instruments : Body back gauge
: Flat plate (for 2005)
: Dial gauge
: Adjusting back cover (2071-1101-75)

■Adjusting procedure

1. Install adjusting back cover, release the shutter until frame counter shows "1".
2. Measure and adjust body back [Standard] ※ 44.70±0.01mm

※ : Required correction of dial gauge by 1mm as figure below since body back gauge is based on conventional SLR cameras such as X-700 whose reference value of body back is 43.70mm.

• Note : One scale for short indicator of dial gauge shows 1mm.

■Fig. 1

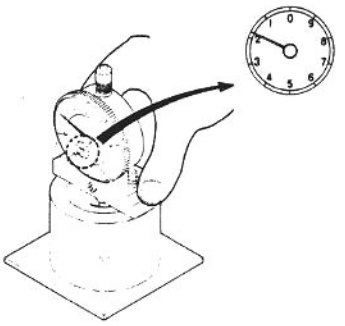

43.70mm

■Fig. 2

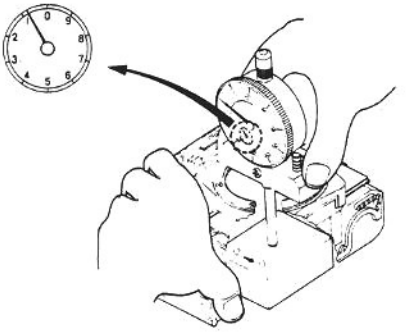

44.70mm

• If the body back is lower than the standard value, insert adjusting washers under the bayonet mount.

[Types of adjusting washers]

Parts No.	2005-1061-81	2005-1062-81	2005-1063-81
Thickness (mm)	0.02	0.05	0.1

• If the body back is higher than the standard value, replace the bayonet mount with the bayonet mount used for repair (2072-1010-81) and adjust in combination with the adjusting washers.
The flange of the bayonet mount used for repair is 0.1mm thinner than that of the regular bayonet mount (2072-1010-02).

■ Finder back adjusting

■Before adjusting, never fail to attach TYPE PM focusing screen (2072-8231-310).

■Measuring instruments : 1000mm collimator 〈MODEL RC-1000 Ⅰ, Ⅱ, Ⅲ〉
: Master lens 〈2072-0001-75〉
: Magnifier
: VB adjuster 〈2071-5147-75〉

■Adjusting procedure

1. Set the camera so that chart image is shown in the center of finder, and set the focusing lens of master lens to infinity (∞).

■Fig. 1

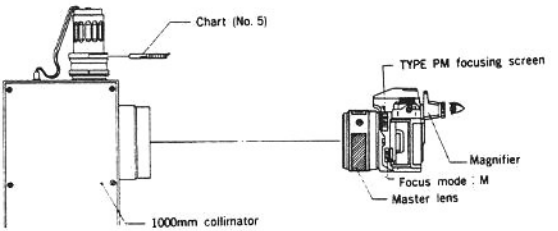

2. Make sure that the scale of master lens is positioned at infinity (∞), and turn mirror stopper to bring chart image into focus (Fig. 2)

■Fig. 2

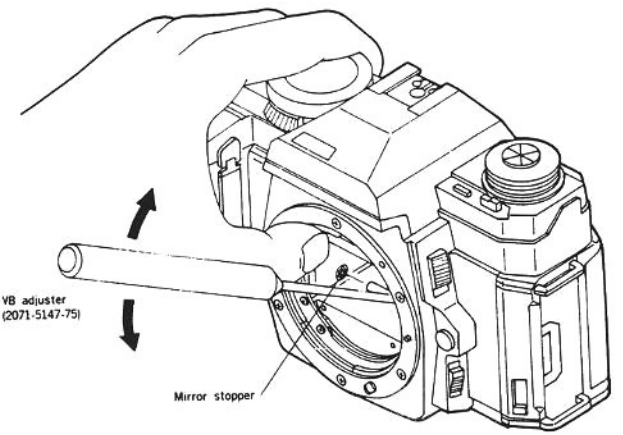

• Adjust finder back, holding mirror with finger as Fig. 2.

3. When the focusing ring of master lens is turned to adjust focus after operating shutter several times, chart image should be in focus at infinity (∞).

Exposure adjusting

■Position of resistor for exposure adjusting.

■Fig. 1

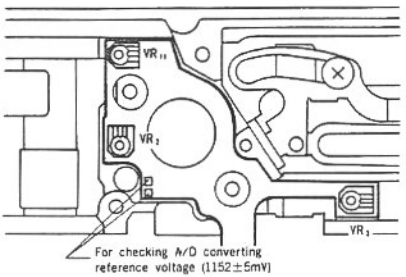

VR_2 : for adjusting AE (AVERAGE)
VR_3 : for adjusting strobo level
VR_{11} : for adjusting AE (SPOT)

■Fig. 2

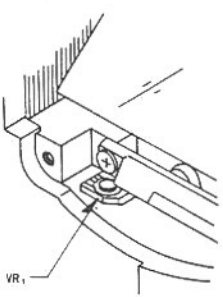

VR_1 : for adjusting A/D converting reference voltage

■Fig. 3

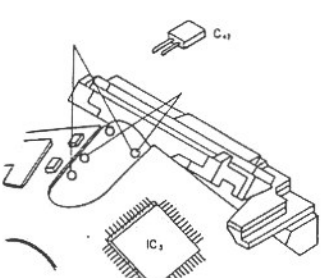

C_{42} : condenser for adjusting shutter speed 1/4000.

■ Manual shutter speed, X delay time checking

■Measuring instruments : SS adapter for EE tester 〈MODEL S-2201, S-2101〉
: Adjusting back cover 〈2071-1101-75〉

■Checking proceduer

1. Install adjusting back cover, release shutter until frame counter shows "1"

■Fig. 1

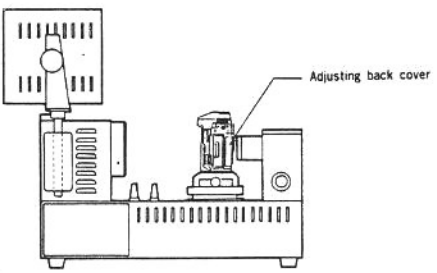

2. Shutter speed checking ·····When using Model S-2101, see value in parenthesis

Shutter speed setting	Reference value (ms)	Allowable range (ms)	Dispersion (B-ranges)	Exposure unevenness
1/4000	0.244	※ 0.167 ~ 0.357 (0.147 ~ 0.337)	Within 0.45Ev $^{+37}_{-27}$%	The difference between maximum and minimum values among A, B, C ranges should be less than 0.6Ev. The difference between A-B, B-C ranges should be less than 0.3Ev.
1/2000	0.488	0.357~0.667	Within 0.35Ev $^{+28}_{-22}$%	
1/1000	0.977	0.625~0.948	Within 0.2Ev $^{+15}_{-22}$%	
1/250	4.64	4.33~4.97		
1/2	500	406~616		

※ : If shutter speed (B range) at 1/4000 sec. is out of allowable range, adjust it following procedure below :

1) Remove top cover.
2) Remove C_{42}.
3) Measure shutter speed 5 times, and calculate the mean.
4) Select a proper C_{42} from table below according to calculation, and install it on flexible PC board-A set.
5) Install top cover, and check shutter speed (1/4000 sec.)

Shutter speed (ms)	Condenser	Position
0.375–0.410 (0.355–0.390)	9565-6815-64	A
0.345–0.374 (0.325–0.354)	9565-4715-64	
0.328–0.344 (0.308–0.324)	9565-3315-64	
0.212–0.228 (0.192–0.208)	9565-3315-64	B
0.198–0.211 (0.178–0.191)	9565-4715-64	
0.146–0.197 (0.126–0.177)	9565-6815-64	

■Fig. 2

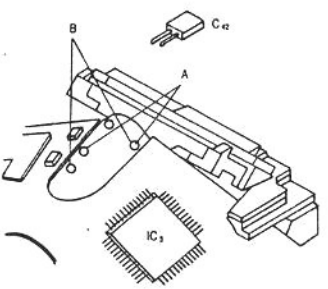

3. X delay time checking

Shutter speed setting	Tolerance (ms)
1/250	A range 0.15 (min)
	B range 1.4 (min)

■ Aperture ring position checking, adjusting

■Measuring instrument : Luminance source 〈MODEL L-2101, L-222, L-223〉
: EE tester 〈MODEL EE-2101, EE-2111〉
: Master lens 〈2072-0001-75〉
: Adjusting back cover 〈2071-1101-75〉

■Checking, adjusting procedure

1. Set camera and measuring instruments as shown.

■Fig. 1

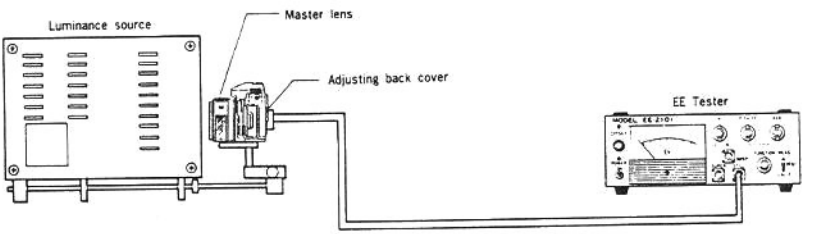

- **Luminance source**
  K value : 1.3
  Luminance : Ev 11
- **Master lens**
  Distance scale ring : ∞
- **Camera**
  Exposure mode : M
  SS : bulb
  Aperture : 5.6
  Focus mode : M
- **EE Tester**
  K value : 1.3
  ASA dial : F
  MFAS-CALF : CALF
  F dial : F5.6

2. Install adjusting back cover, release the shutter until frame counter shows "1".

   —Note—

   When installing master lens on camera body, check if diaphragm blades in optical path are not visible at full opening setting.

   If visible, check……P. 16 Fig. 2, P. 17, Fig. 1.

3. Release shutter. Adjust eccentric screw of aperture ring set so that indicator of EE Tester shows "0±0.3Ev". (Fig. 2)

■Fig. 2

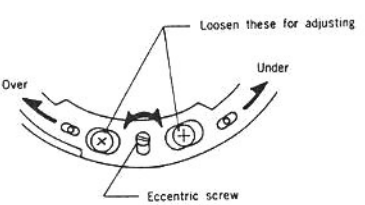

■ A/D converting reference voltage adjusting (1152mV)

■Measuring instrument : Digital multimeter (Type 2508, 3476, 2507)

■Adjusting procedure

1. Solder measuring lead wires (× 2) as shown below.

■Fig. 1

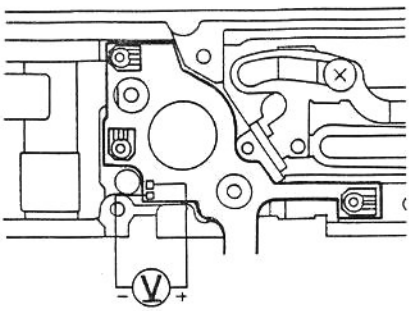

2. With main switch and touch switch (metering switch) turned ON, adjust by turning VR_1 (after flare shield plate removed) so that voltage is in 1152±5mV.
   ※ : Allowable range varies depending on surrounding temperature as below :

Temperature (°C)	20±2.5	25±2.5	30±2.5
Allowable range (mV)	1133±5	1152±5	1171±5

■Fig. 2

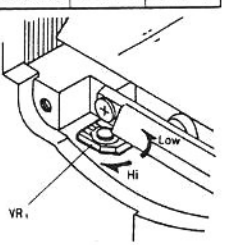

3. Unsolder measuring lead wires, and remove solder.

※ : VR_1 adjusting is not possible without flare shield plate removed. Before adjusting, remove flare shield plate following procedure below :

1) Complete winding, set aperture at minimum (Complete initial loading).
2) Remove 9611-1620-09 (×2) (Fig. 3)
3) Move mirror up slightly and remove flare shield plate.
4) Bend flare shield plate as shown.
5) Apply [B] on flare shield plate, and install it in body.
6) Secure flare shield plate by tightening 9611-1620-09 (×2).

■Fig. 3

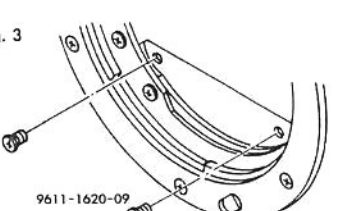

■Fig. 4

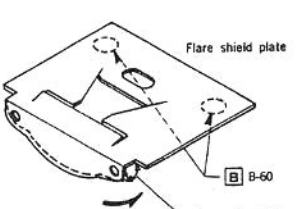

AE adjusting

Measuring instruments : Camera I/O tester (MODEL IO-5101)
: Master lens (2072-0001-75)
: Luminance source (MODEL L-2101, L-222, L-223)

Adjusting procedure

1. Set camera and measuring instruments as below:

Fig. 1

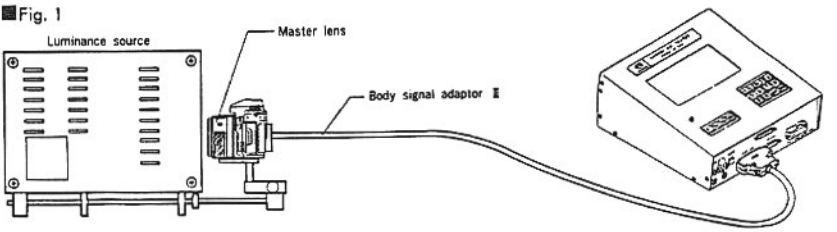

- **Luminance source**
  K value : 1.3
  Luminance : Ev 10 (Ev 11 + ND 50%)*
- **Camera**
  ISO : 100
  Exposure mode : A
  Metering mode : See below
  Aperture : 5.6
  Focus mode : M
- **I/O tester**
  DC-OUT : 3V

※ : Luminance in perentheses show the case of using luminance source L-222 or L-223.

2. Release the shutter until frame counter shows "1".
3. Push [7] key and then [ENT] key of camera I/O tester.
4. Set exposure mode at AVERAGE.
5. Turn touch switch (or metering switch) ON.
   1) Check if [✳] blinks at AVERAGE in LCD of camera I/O tester.
   2) Turn VR_2 to display [OK] in LCD of camera I/O tester.
   3) Check if LCD on camera body displays [30] of shutter speed.
6. Set exposure mode at SPOT, turn touch switch (or metering switch) ON.
   1) Check if [✳] blinks at SPOT in LCD of camera I/O tester.
   2) Turn VR_{11} to display [OK] in LCD of camera I/O tester.
   3) Check if LCD on camera body displays [30] of shutter speed.
7. Set exposure mode at H, check if [✳] at H and [OK] display in LCD of camera I/O tester.
   (If not, replace flexible PC board-A set with new one.)
8. Set exposure mode at S, check if [✳] at S and [OK] display in LCD of camera I/O tester.
   (If not, replace flexible PC board-A set with new one.)

Fig. 2

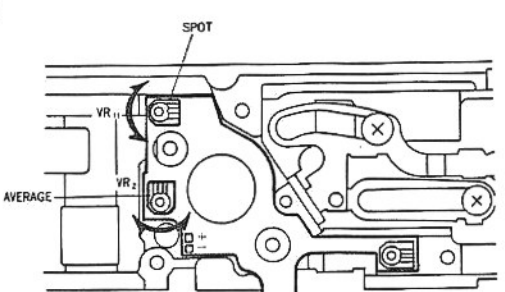

AE checking

Measuring instruments : Luminance source (MODEL L-2101, L-222, L-223)
: EE tester (MODEL EE-2101, EE-2111)
: Master lens (2072-0001-75)
: Adjusting back cover (2071-1101-75)

Checking procedure

1. Set the camera and measuring instruments as follows.

Fig. 1

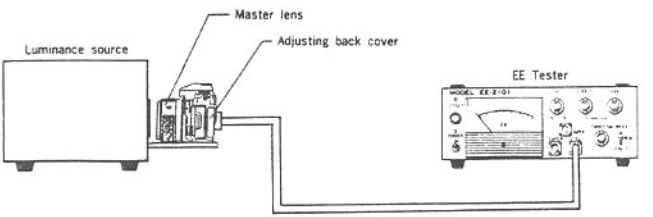

- **Luminance source**
  K value : 1.3
  Luminance : See Table below.
- **Camera**
  ISO : 100
  Exposure mode : See Table below
  Metering mode : AVERAGE
  Aperture : See Table below
  Focus mode : M
  Shutter speed : See Table below
- **Master lens**
  Focusing ring : ∞
- **EE tester**
  K value dial : 1.3
  ASA dial : 100

2. Install adjusting back cover, release the shutter until the counter shows "1".
3. Check AE level following steps below :

Luminance and aperture in parentheses show the case of using Lumimnance source L-222/L-223.

Step	Luminance	Metering mode	Shutter speed	Aperture	AE-Allowable range
1	EV 6 (EV 5)	A	—	F5.6 (F8)	0±0.8EV
2	EV 10 (EV 11)				
3	EV 15 (EV 15)				
4	EV 6 (EV 5)	P	—	—	
5	EV 10 (EV 11)				
6	EV 15 (EV 15)				
7	EV 10 (EV 11)	S	1/250	—	
8			1/30		

Strobo level adjusting

Ⓐ Adjusting by luminance source (MODEL L-2101)

- The MODEL L-2101 luminance box should be used. However, ones with color temperatures ranging from 2600K to 3000K (measured value of the Minolta color meter) at EV 15 can also be used.
- Luminance boxes with long-wavelength cut filters and lamps with cold mirrors cannot be used because of measuring errors. (Example : MODEL L-223)
- When no luminance source is used for the adjustment, employ method Ⓑ on the next page.

Measuring instruments : Luminance source (MODEL L-2101)
: Strobo level adjuster (2017-0001-75)
: Film (Use Kodacolor VR 100 which has been exposed to indoor light at least one day.)
: Master lens (2072-0001-75)
: DC power supply (MODEL 524B, E-1, E-2)
: Time counter (MODEL TC-1)·····ST-5101 is usable.

Adjusting procedure

1. Set camera and measuring instruments as below:

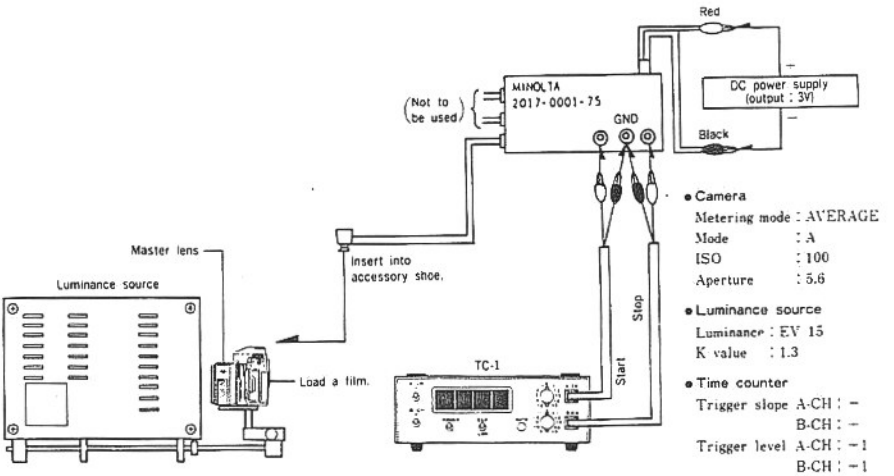

2. Release the shutter until frame counter shows "1".
3. With the shutter released, adjust by turning VR_3 so that indication of time counter is in 0.84 ±0.1ms.

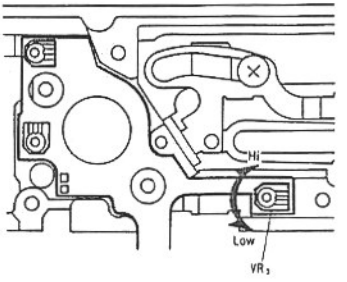

B Adjusting by strobo tester (MODEL ST-Ⅲ)

MODEL ST-Ⅰ, Ⅱ cannot be used because non-cord adjusting is impossible.

Measuring instruments : Strobo tester (MODEL ST-Ⅲ)
: Film (※Use Kodacolor VR 100 which has been exposed to indoor light at least one day.)
: Master lens (2072-0001-75)
: Reflection paper (1.3m×2m)……used for adjusting of Minolta AEF series.
: PROGRAM FLASH 2800AF (8821)

Preparations

1. Set the camera and measuring instruments as follows.

Fig. 1

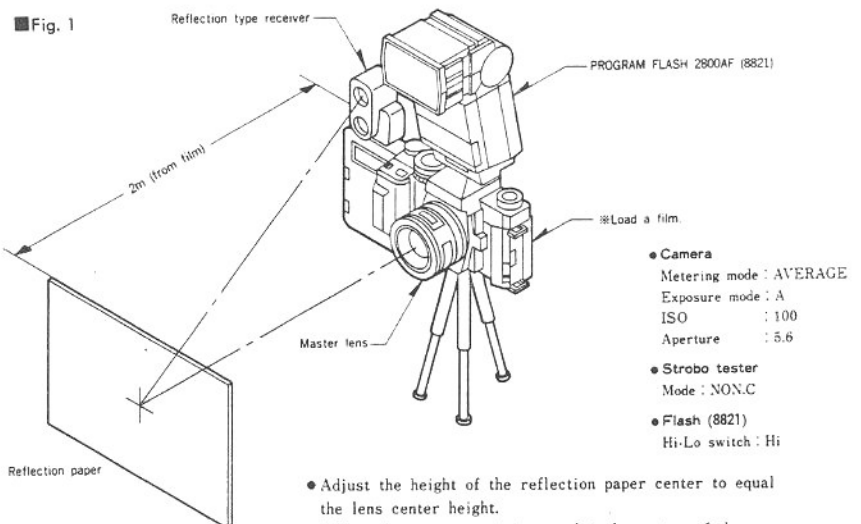

- Adjust the height of the reflection paper center to equal the lens center height.
- Adjust the camera position so that the center of the reflection paper matches the center of the viewfinder range.

Adjusting procedure (darken the room to eliminate the influence of external light)

1. Set the flash main switch to ON, and 30 sec. or more after the pilot lamp illuminates, look into the viewfinder of the strobo tester (shown above) from near the flash, and then direct the eyepoint of the view center to the center of the reflection paper. Next release the camera shutter and read the indication of the strobo tester.
2. If the indication of the strobo tester is not within $\boxed{\text{F5.6}\pm\text{0.5EV}}$. Adjust by turning VR_3. (See Fig. 2)

Fig. 2

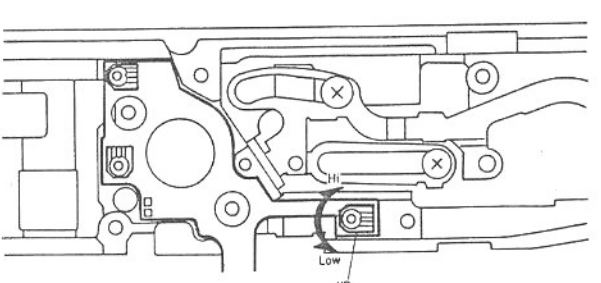

AF checking/adjusting

■When having replaced flexible PC board-B set, mirror or mirror box, or when having received trouble with AF, re-adjust AF following 1-7 (p. 38-41).
When having trouble other than AF, re-check AF following "AF operation checking" shown below.

■Measuring instruments : Camera I/O tester (MODEL IO-5101)
: Master lens (2072-0001-75)
: AF adjusting tool (2072-0002-76)
: Tripod attachment (2072-0003-75)
: Tripod attachment collar (2071-0003-75)
: AF chart-I (2072-0004-75)
: AF chart-II (2072-0005-76)
: Power supply adapter (2071-1092-75)
: Sub mirror adjusting toll (2071-1092-75)
: 1000mm collimator (MODEL RC-III, II, I)
: Hexagon wrench (1.5)
: Flood lamp (color temperature : about 2800K)

AF operation checking

Before AF checking, initial loading, body back and finder back should be completed.

1. AF area checking

1) Set the instruments as below.

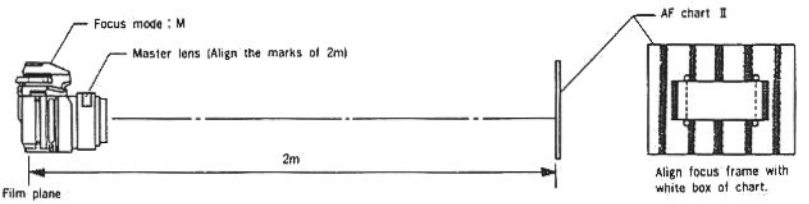

2) Turn touch switch (or metering switch) ON : low-contrast signal should be indicated (▶◀ blinking). If other focus signal than low-contrast lights, re-adjust AF following procedures 1 to 7 since it shown AF area deviation.

2. In-focus checking

Set focus mode to AF and check AF operation below. If out of requirement, re-adjust AF following procedures 2-7.

- Center focus frame on chart of collimator and operate AF : lens should stop at ∞ with in-finder signal lighting.
- Autofocus on subject 2-3m away that can be autofocused : in-focus signal should light, and subject in viewfinder should be clear.

Preparation for AF adjusting

Before adjusting AF, make sure the followings :

- Body-back and finder-back adjusting have already been completed.
- External parts except bottom cover are on the body.
- Focusing screen is standard type (2071-5805).

1. Connect AF measuning cord of camera I/O tester to camera (Fig. 1).

■Fig. 1

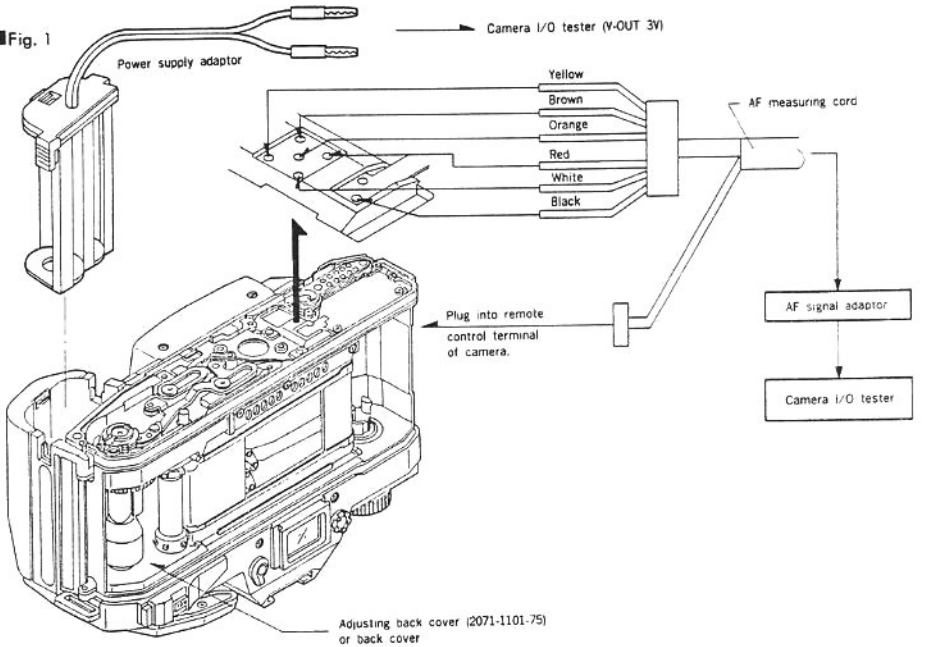

2. Release the shutter until frame counter shows "1" to complete initial loading.
3. Secure the camera on tripod using tripod attachment and collar (Fig. 2).
4. Give light to AF chart.
   For adjusting AF [1]-[7], give light to AF chart (Fig. 3).

■Fig. 2

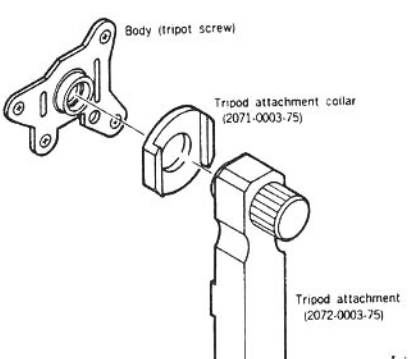

■Fig. 3

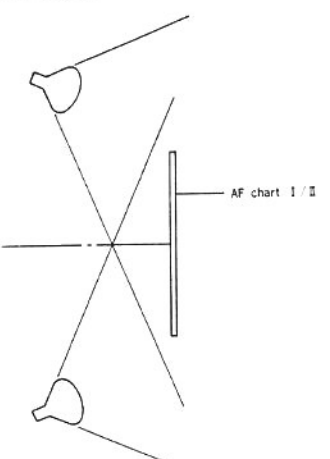

Light up AF chart evenly BV 3 or more) with flood lamp used.
Color temperature of flood lamp : 2800K (approx.)
Measure the light of flood light on AF chart and check that the color temperature is about 2800°K.
Be careful that AF chart is not affected by other light source than flood lamp, such as fluorescent light, sunlight, etc., as much as possible.

1 AF area adjusting ·····Adjustment to center AF area on focus frame

■Adjusting procedure

1. Set the instruments as shown.

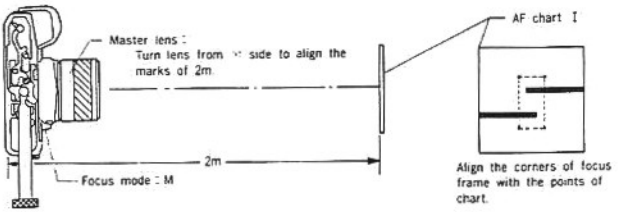

2. Push 1 key and then ENT key of camera I/O tester.
3. Adjust position of sub mirror so that camera I/O tester shows 1.0±0.1 in LCD.

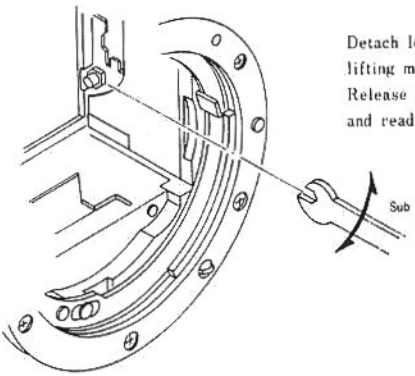

Detach lens, and adjust position of sub mirror lifting mirror up with finger.
Release the shutter 2-3 times after adjustment, and read value of camera I/O tester.

4. After the adjustment, push RESTART key of camera I/O tester.

2 MZ checking ·····Checking of CCD image sensor positioning

1. Set the instruments as shown.

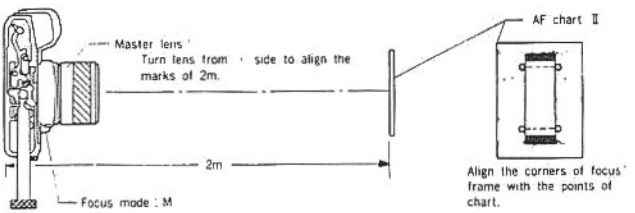

2. Push 2 key and then ENT key of camera I/O tester.
3. If camera I/O tester does not show ±400 in LCD, MZ adjusting is required. (See p. 15.)

3 Pitch adjusting ·····Adjustment of CCD image sensor tilting

■Adjusting procedure

1. Set the instruments as shown.
   Face the flood lamp to the camera (only for checking/adjusting of Pitch, Yaw).

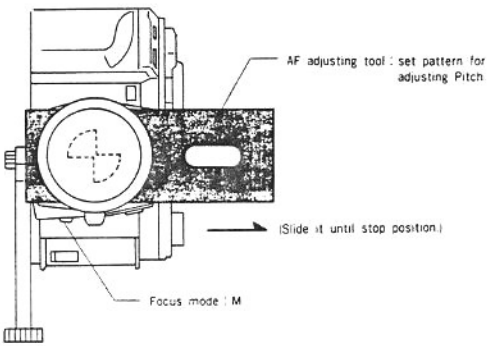

2. Push [3] key and then [ENT] key of camera I/O tester.
3. Turn AF adjusting screw (for adjusting Pitch) so that camera I/O tester shows [1.0±0.1] in LCD.

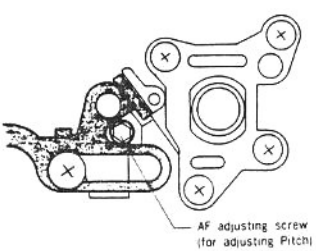

4. After the adjustment, push [RESTART] key of camera I/O tester.

4 Yaw adjusting ·····Adjustment of CCD image sensor tilting

■Adjusting procedure

1. Set the instruments as shown.
   Face the flood lamp to the camera (only for checking/adjusting af Pitch, Yaw).

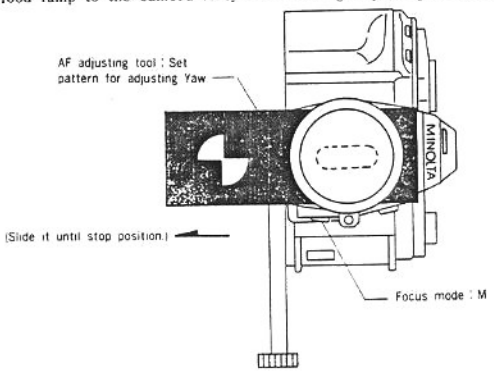

2. Push 4 key and then ENT key of camera I/O tester.
3. Turn AF adjusting screw (for adjusting Yaw) so that camera I/O tester shows 1.0±0.15 in LCD.

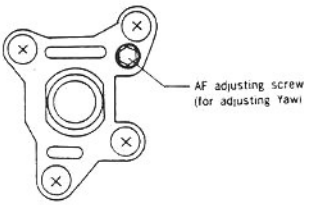

4. After the adjustment, push RESTART key of camera I/O tester.

5 Pitch/Yaw checking

Check Pitch and Yaw following procedures Ⅲ, Ⅳ. If out of Pitch : 1.0±0.1 , Yaw : 1.0±0.15 , re-adjust and re-check Pitch/Yaw following procedures from Ⅲ or Ⅳ.

6 AF area checking

1. Set the instruments as below. (Disconnect AF measuring cord from AF signal adapter.)

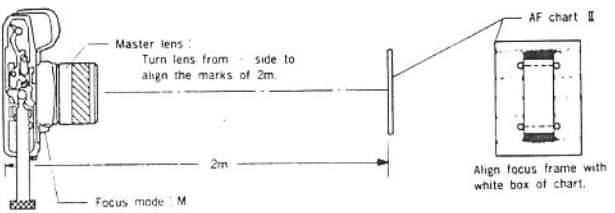

2. Turn touch switch (or metering switch) ON : Low-contrast signal should be indicated (▷◁ blinking).
   If not, re-adjust and re-check AF area, following procedures from Ⅱ.

7 EZ adjusting

■Adjusting procedure

1. Set the instruments as shown. (Align focus frame with portion A of AF chart.)

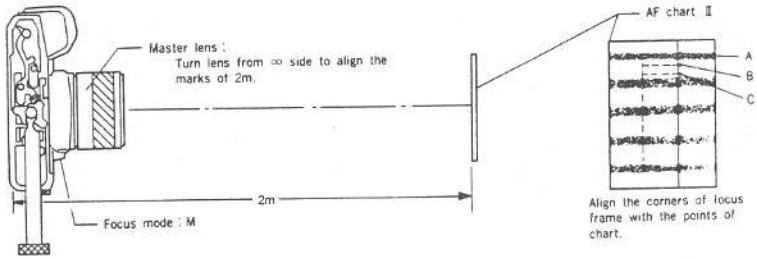

2. Push [2] key and then [ENT] key of camera I/O tester.
3. Read EZ value in LCD of camera I/O tester.
4. Shifting focus frame from portion A → B → C, read EZ value in LCD of camera I/O tester. (Since EZ value somewhat varies, average the EZ values of A, B, and C.)
5. Find intermediate EZ value, and align focus frame with relevant portion (A, B or C).
6. Turn VR_4 so that camera I/O tester shows [30±10] in LCD.

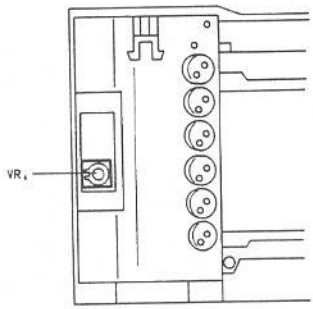

7. After the adjustment, push [RESTART] key of camera I/O tester.

■Check after adjusting

① Disconnect AF measuring cord from AF signal adapter and set focus mode to AF.

② When autofocusing with general subject (except subject difficult for auto focusing), in-focus LED should glow and image in viewfinder should be sharp.

Replacing procedure

■The procedures 1-7 are given in this Manual with external parts removed.
For disassembling/assembling external parts, see p. 11~12.

■After replacing, adjust and check the items shown in the table below.

Ⓐ ····· Flexible PC board-A replacing
Ⓑ ····· Mirror box assembly replacing
Ⓒ ····· Flexible PC board-B replacing
Ⓓ ····· AF motor set replacing
Ⓔ ····· Winding gear base plate set replacing
Ⓕ ····· Mirror replacing
Ⓖ ····· Shutter block replacing
Ⓗ ····· In-finder LCD replacing (or repairing for some segment OFF in viewfinder)

Ⓐ	Ⓑ	Ⓒ	Ⓓ	Ⓔ	Ⓕ	Ⓖ	Ⓗ	Adjusting/checking item	Repair Guide p.
○	○	○	○	○	○			AF operation checking	36
	○	○						AF area adjusting	38
	○							MZ checking/adjusting	15 (38)
								Pitch adjusting	39
								Yaw adjusting	40
								EZ adjusting	41
	○	○	○			○		Body back adjusting	26
						○		Finder back adjusting	27
○	○							In-finder display position adjusting	8
	○							Aperture-ring position adjusting	30
								A/D conversion reference voltage (1152mV) adjusting	31
								AE level adjusting	32
								Flash level adjusting	34
						○		Manual shutter speed/X delay time checking	29
								AF coupler adjusting	18
								Over-run prevention lever adjusting	2

INDEX

Page

1. Flexible PC board-A replacing ····· 43
2. Mirror box assembly removing ····· 48
3. Mirror box assembly installing ····· 52
3. Flexible PC board-B replacing ····· 58
5. AF motor set replacing ····· 60
6. Winding gear base plate set replacing ····· 62
7. In-finder LCD replacing (or repairing for some segment OFF in viewfinder) ····· 68
8. Main mirror replacing (Unnecessary to remove external parts) ····· 70

Fig. A

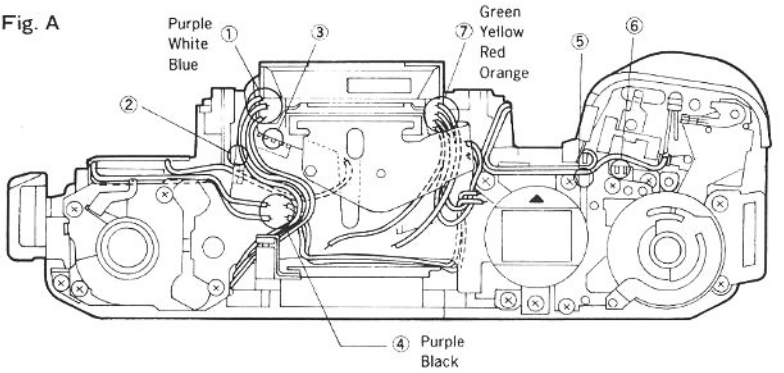

Fig. B

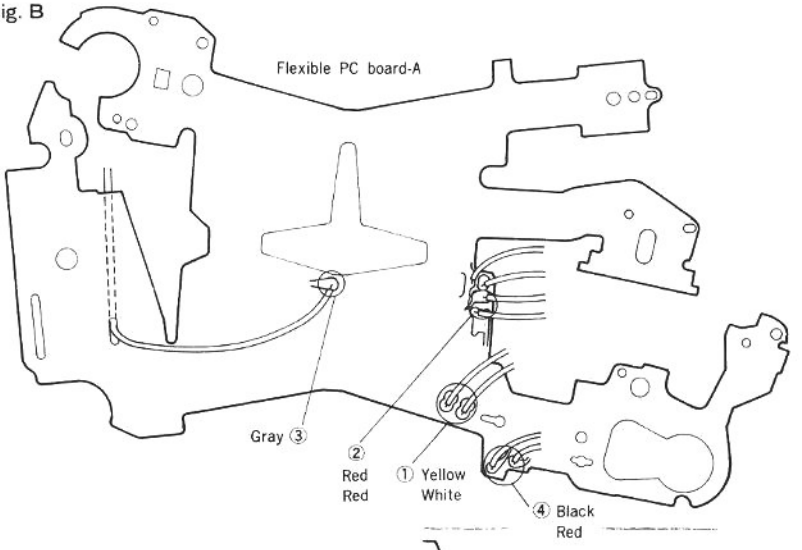

Fig. C

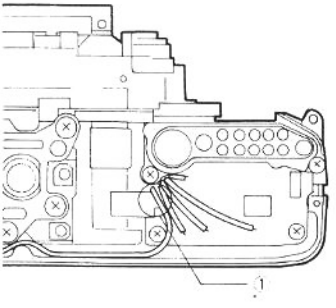

Fig. D

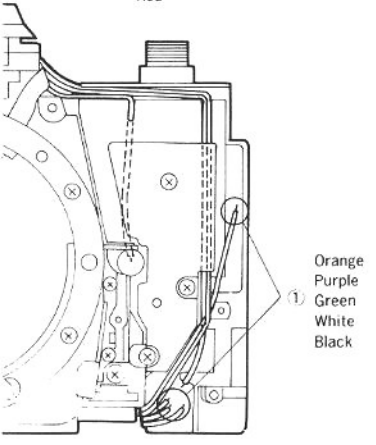

1. Flexible PC board-A replacing

1 Remove data panel block.

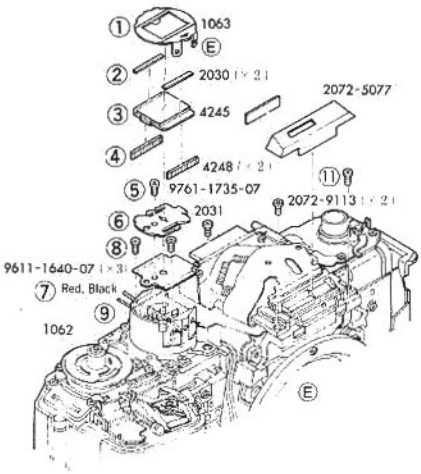

1. To remove ①, disengage Ⓔ (①) from Ⓔ (⑨) using tweezers.
2. Remove ②–④ (②× 2, ④× 2)

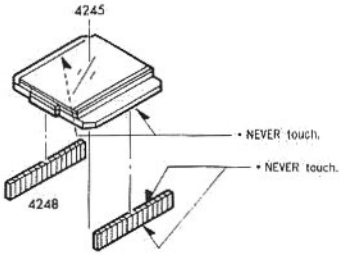

3. Remove ⑤, ⑥.
4. Unsolder ⑦ (× 2). (Fig. B ④)
5. Remove ⑧ (× 3).
6. Remove ⑩.
7. Remove ⑪ (× 2).

2 Remove conter base plate set.

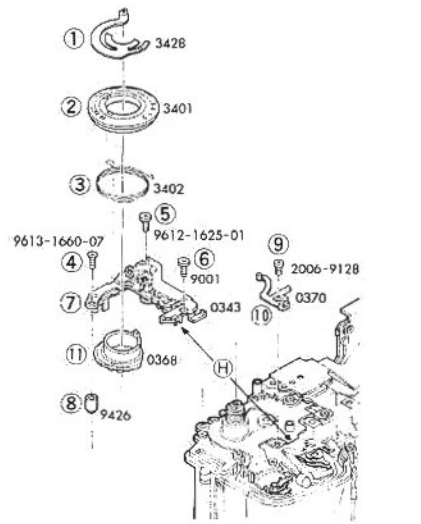

1. Remove ① and ②, ③.
2. Remove ④–⑥.
3. To remove ⑦, ⑧, unsolder Ⓗ between ⑦ and flexible PC board-A.
4. Remove ⑨ and ⑩, ⑪.

Continued on next page

3 Remove flex pressure.

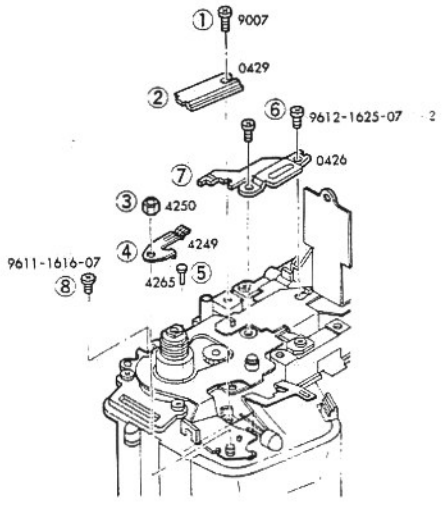

1. Remove ①, ②.
2. Remove ③ and ④, ⑤.
3. Remove ⑥ (× 2) and ⑦.
4. Remove ⑧.

4 Remove lock lever holder.

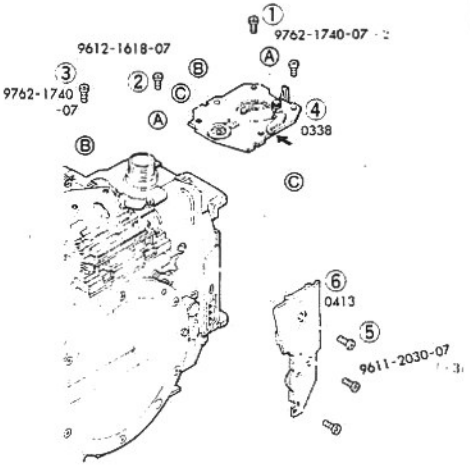

1. Remove ① (× 2), ②, ③.
2. Detach tape of ⓐ – ⓒ (④) (Fig. 1)

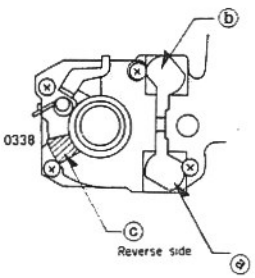

3. Remove ④ while pushing in the direction of ➡.
4. Remove ⑤× 3, ⑥.

5 Unsolder.
①–⑤ (Fig. A)
①–③ (Fig. B)

Continued on next page

6 Replace flexible PC board-A.

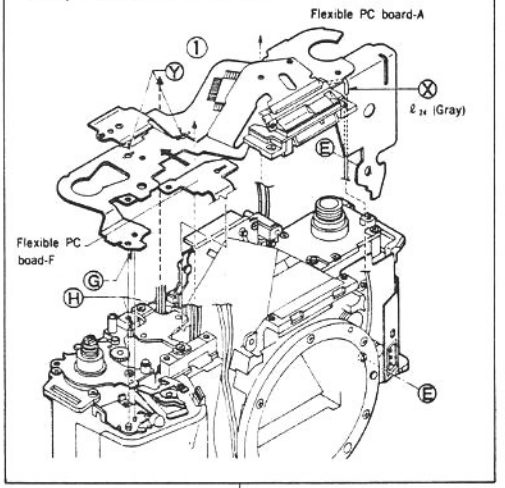

1. Disengage Ⓔ (①)···Be careful not to break flexible PC board.
2. Remove ①.
3. Replace ①.
   Re-attach C_{42} from previous flexible PC board to new one.

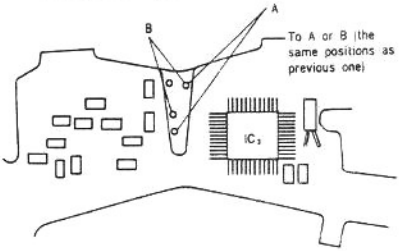

4. Pass ℓ24 (Gray) through hole Ⓧ (①).
5. After arranging lead wires, flexible PC boar -F, attach ① to body.
6. Engage Ⓨ (①) with claw of Ⓗ.
7. Attach Ⓖ (①) with double-faced tape.

7 Solder
①-⑤, ⑦ (Fig. A)
①-③ (Fig. B)

8 Install Flex pressure.

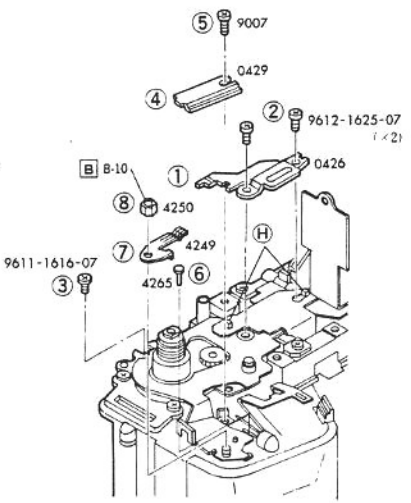

1. Engage flexible PC board-F with Ⓗ.
2. Placing ① on flexible PC board-F tighten ② (× 2).
3. Tighten ③.
4. Placing ④ on flexible PC board-A, tighten ⑤.
5. Install ⑥, ⑦ with ⑧.

Continued on next page

9 Data panel block installing.

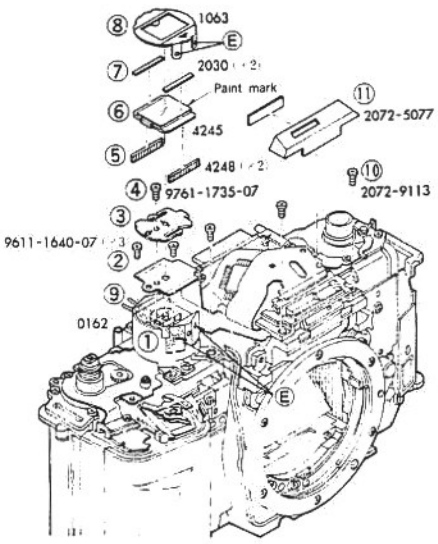

1. Install ① with ② (× 3).
2. Placing ③ on flexible PC board-A, tighten ④.
3. Insert ⑤ (× 2) between ① & ③ each.
4. Place ⑥ on ⑤.
5. Place ⑦ on ⑥.
6. Install ⑧ and engage Ⓔ with ①.
7. Solder ⑨ (× 2) (Fig. B ④).
8. Install in-finder block.

Adjusting of in-finder block positioning. (P. 8 Fig. 1)

9. Attach ⑫ with ⑪.

10 Install three layers of flexible PC board.

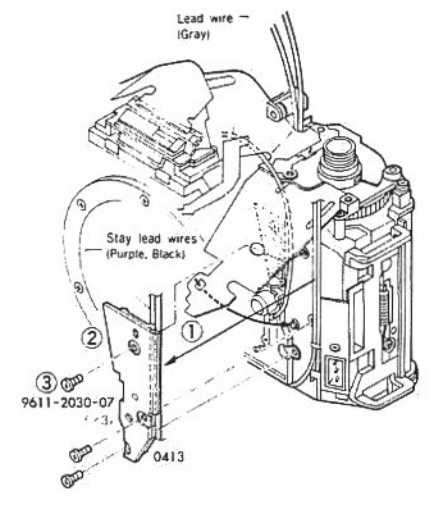

1. Stay lead wire (Gray) along slanting lines, and place ① over.
2. Stay lead wires (Purple, Black) as shown, place ② over.
3. Tighen ③ (× 3).

Continued on next page

11 Install lock-lever holder.

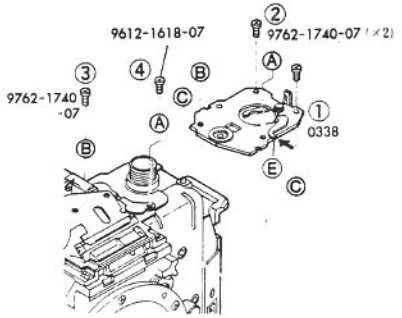

1. Install ① while pushing in the direction of ➡.
2. Tighten ② (× 2).
3. Tighten ③, ④.
4. Attach ⓐ – ⓒ with tape.

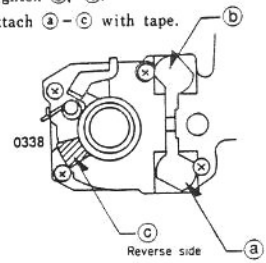

12 Counter base plate installing

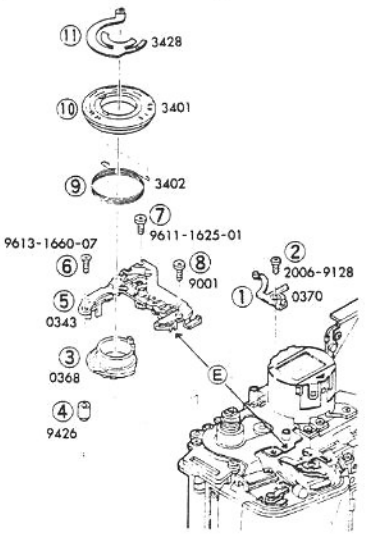

1. Install ① with ②.
2. Install ③.

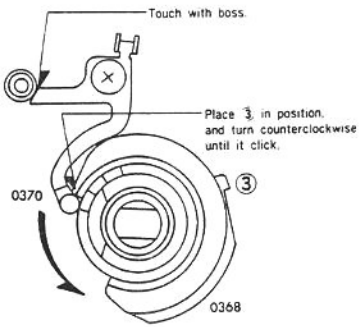

3. Install ④, ⑤.

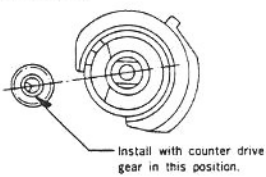

4. Install ⑥–⑧.
5. Solder Ⓔ (⑤) on flexible PC board-A.
6. Install ⑨, ⑩.
7. Charge ⑩ by turning clockwise once, and install ⑪.

Arrange lead wires. (p. 11)

Check operation

With film advance lever, back cover, lens, battery (or battery adapter) attached, check operation of winding, releasing, indication, AF.

Install external parts.(p.11~12)

Adjusting

2. Mirror box assembly removing

1 Remove counter base plate.

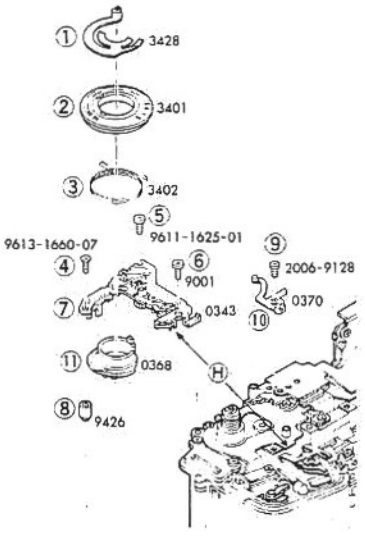

1. Remove ① and ②, ③.
2. Remove ④–⑥.
3. To remove ⑦, ⑧, unsolder ⑨ (⑦) from flexible PC board-A.
4. Remove ⑨, and ⑩, ⑪.

2 Remove flex pressure.

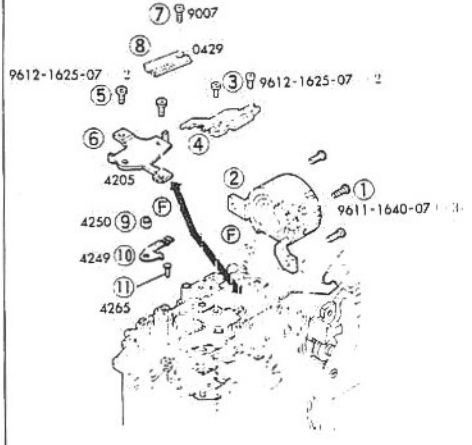

1. Remove ① (× 3).
2. Unsolder ② (× 2) (Fig. B-④).
3. Turn over ② as shown, and remove ③ (× 2), ④.
4. Remove ⑤ (× 2).
5. To remove ⑥, disengage flexible PC boards F and A from the claw of ⑥.
6. Remove ⑦, ⑧.
7. Remove ⑨ and ⑩, ⑪.

Continued on next page

3 Remove in-finder block.

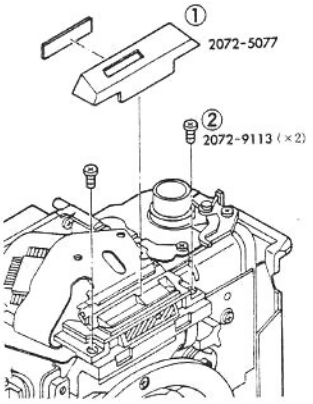

1. Remove ①.
2. Remove ② (× 2).

4 Unsolder
①-④ (Fig. A)
①-② (Fig. B)

5 Remove hand grip set.

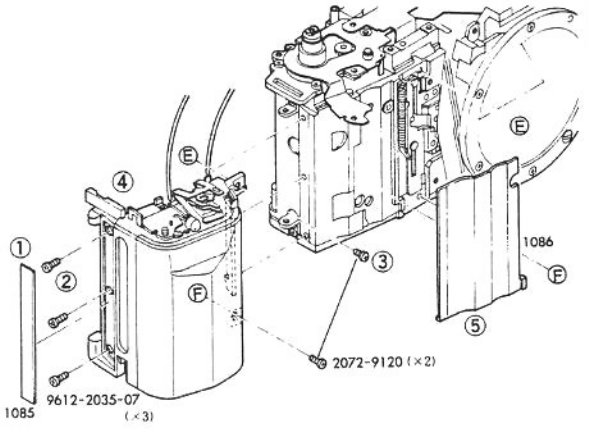

1. Remove ①.
2. Remove ② (× 3).
3. Remove ③ (× 2).
4. Lift up flexible PC board-A as shown, and remove ④.
5. Remove ⑤.

Continued on next page

6 Remove remote control terminal set, three layers of flexible PC boards.

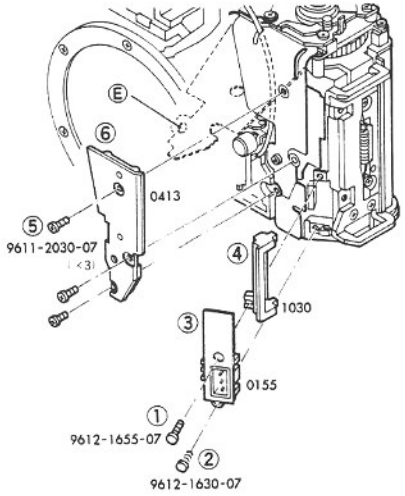

1. Remove ①, ② and ③, ④.
2. Remove ⑤ (× 3), ⑥.
3. Lift up flexible PC boards A and B. (Do not tear the boards at engagement Ⓔ).

7 Unsolder
③ (Fig. B)
① (Fig. C)
① (Fig. D)

8 Remove eyepiece lens.

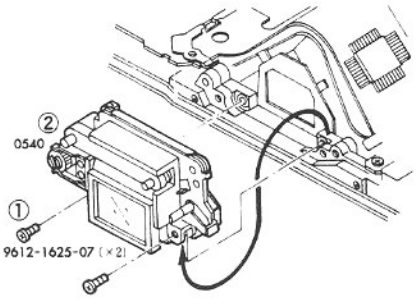

1. Remove ① (× 2), ②.

Continued on next page

9 Remove mirror charge lever set.

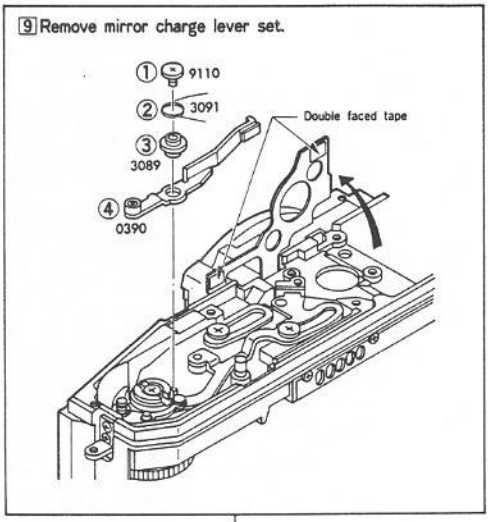

1. Remove ① and ②-④.
2. Detach double-faced tape, and lift up flexible PC board-B in the direction of (➡).

10 Remove mirror box assembly.

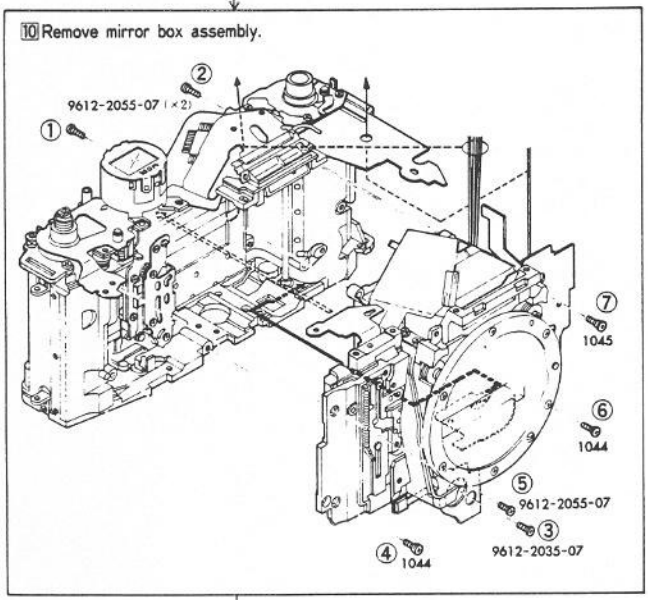

1. Remove ①-⑦.
2. Disengage Ⓓ of flexible PC board-B, and remove mirror box assembly.

(Fig. 1)

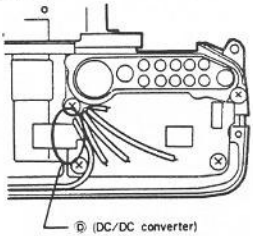

Mirror box assembly installing. (P. 52)

3. Mirror box assembly installing

1 Charge shutter set, mirror box, aperture control set.

1. Check operation of ①–⑨.

■After checking, charge mechanism of winding, shutter set aperture control set to install mirror box assembly.

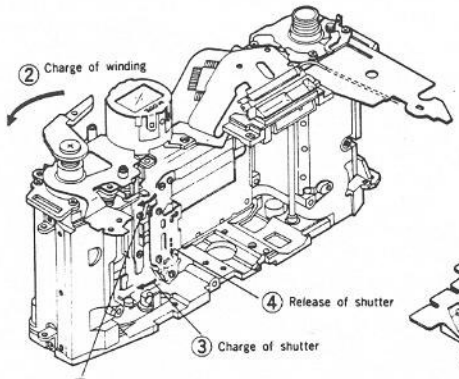

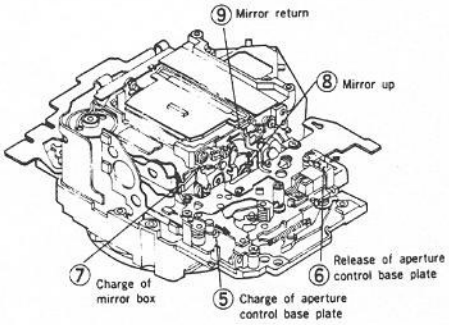

2 Install mirror box assembly.

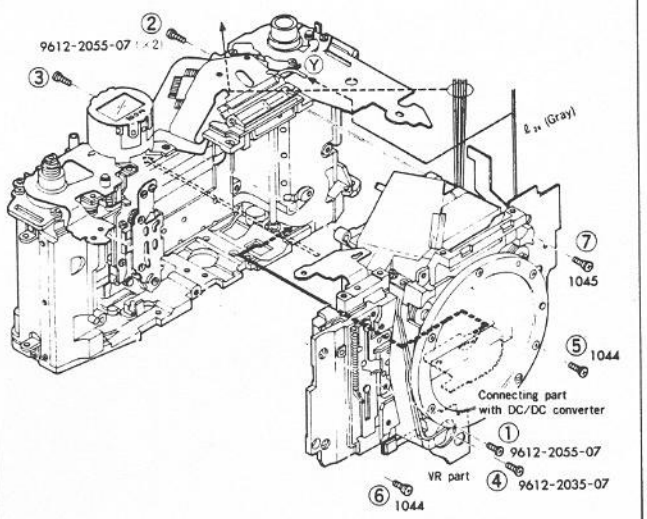

1. Pass ℓ24 (Gray) through Ⓨ and fold of fleixlbe PC board-A.
2. Arrange lead wires as shown, and install mirror box assembly on body
   …Do not catch flexible PC board-B (connecting part with DC/DC converter, VR part) in the body.
3. Tighten ①–⑦ in order.

Continued on next page

3 Solder
①–③ (Fig. A)
③ (Fig. B)

4 Install in-finder block

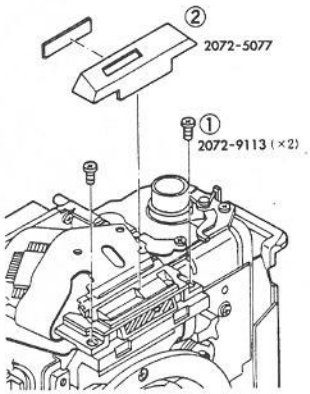

1. Tighten ① (× 2).

Adjusting of in-finder block positioning (P. 8 Fig. 1)

2. Attach ②.

5 Install hand grip set.

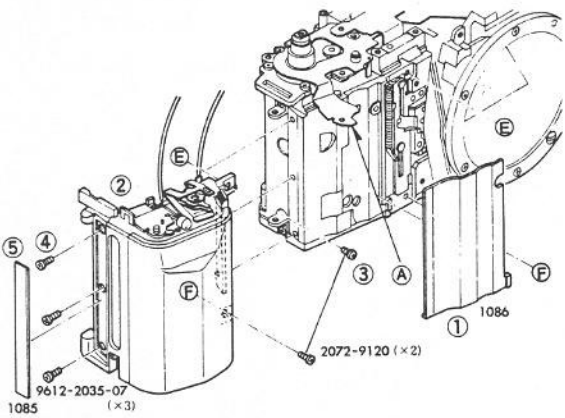

1. Attach ① with ⒷB-60.
2. Install ②.
3. Tighten ③× 2, ④× 3.
4. Attach Ⓐ to ②.
5. Attach ⑤.
6. Check operation of PV lever.

Continued on next page

6 Flex pressure installing.

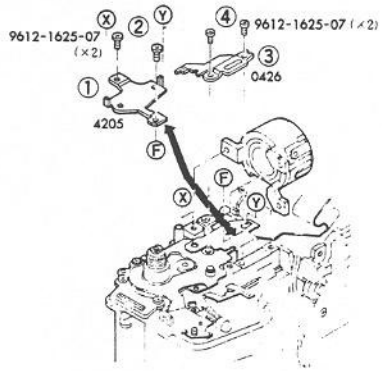

1. Place ① under flexible PC board-A, and tighten ② (× 2).
2. Engage flexible PC boards A and F with the claw of ①.
3. Placing ③ on flexible PC board-F, tighten ④ (× 2).

7 Data panel block installing.

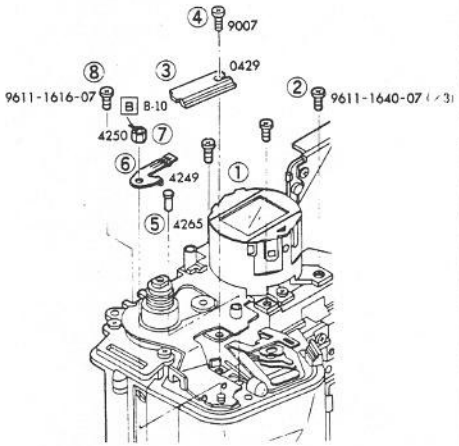

1. Install ① with ② (× 3).
2. Solder lead wires of ① (× 2)···(Fig. B ④)
3. Placing ③ on flexible PC board-A, tighten ④.
4. Install ⑤, ⑥ and tighten ⑦.

Continued on next page

8 Install three layers of flexible PC board.

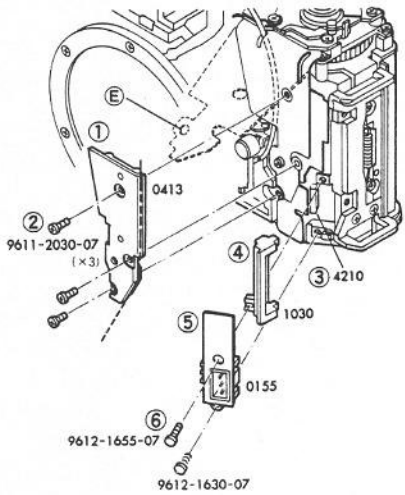

1. Place three layers of flexible PC board-A on those of flexible PC board-B with Ⓔ engaged.
   • Do not tear the board when engaging Ⓔ.
2. With lead wire (Black, Purple) along with dotted lines, place ① over and tighten ② (× 3).
3. Attach ③ under the terminal on PC board side.
4. Install ④.
5. Install ⑤ and tighten ⑥, ⑦.

9 Soldering.

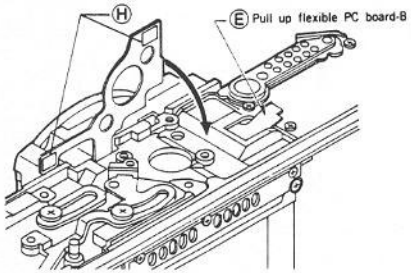

1. Pull up flexible PC board-B, and solder portion Ⓔ (× 3).
2. Attach flexible PC board-B with double-faced tape on Ⓗ.

Continued on next page

10 Install mirror charge lever.

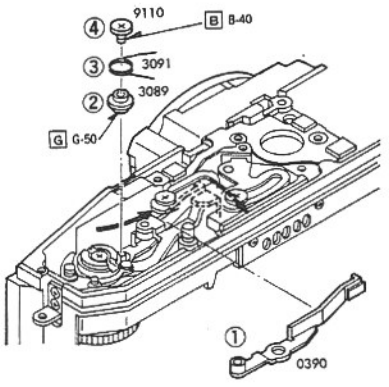

1. Install ① as shown by (➡). (inside of the claw)
2. Install ②, ③ and tighten ④.

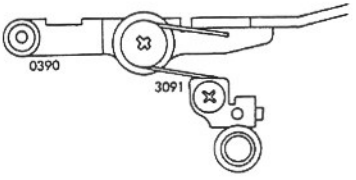

11 Install eyepiece lens.

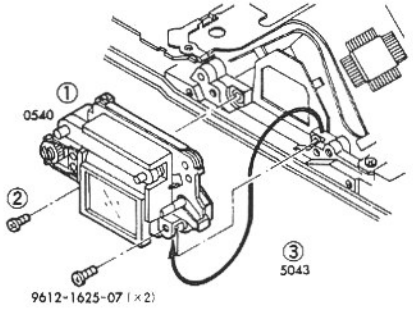

1. Install ① with ② (× 2)

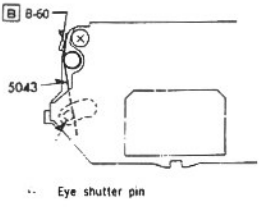

2. Hook ③ in position.

Continued on next page

12 Install counter base plate set.

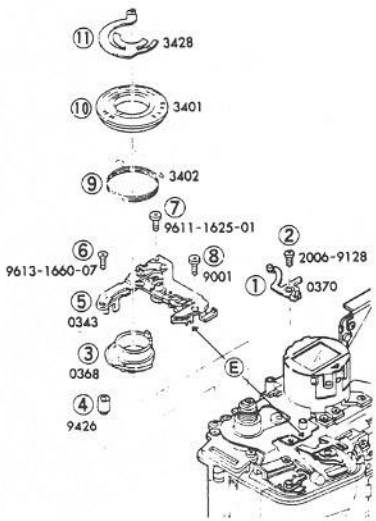

1. Install ① with ②.
2. Install ③.

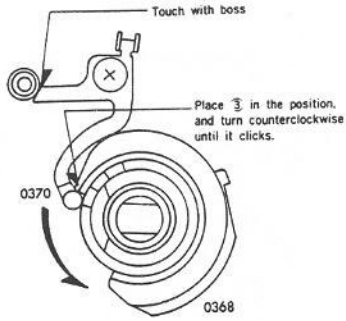

3. Install ④, ⑤.

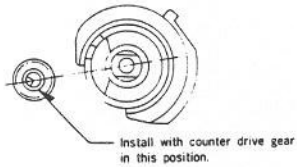

4. Tighten ⑥–⑧.
5. Solder Ⓔ (⑤) on flexible PC board-A.
6. Install ⑨, ⑩.
7. Charge ⑩ by turning clockwise once, and install ⑪.

Arrange lead wires. p. 11.

Check operation

With film advance lever, back cover, lens, battery (or battery adapter) attached, check operation of winding, releasing, indication, AF.

Install external parts (p. 11~12)

Adjusting

4. Flexible PC board-B replacing

※If not removing SPC holder, skip the procedures given in

1 Remove mirror box assembly.
(Mirror box assembly removing p. 48~51)

2 Remove flare shield plate.

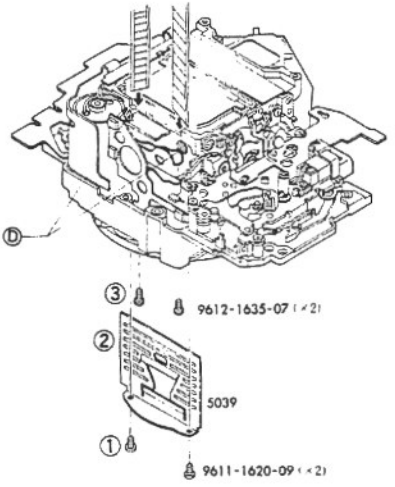

1. Set ⓐ, ⓑ as below in the order.

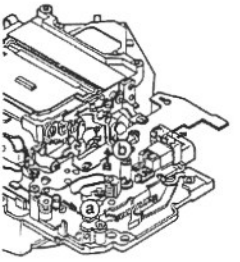

2. Remove ① (× 2).
3. Lifting up mirror, cut off bond of Ⓓ with cutter and remove ②.
4. Remove ③ (× 2).
   - Do not turn eccentric pin of SPC holder.

3 Remove screw holding flexible PC board-B.

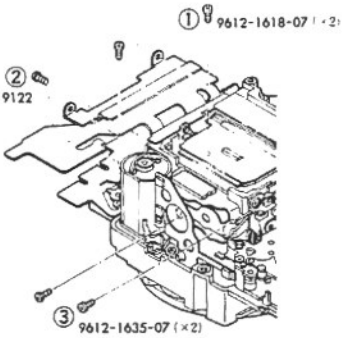

1. Unsolder two lead wires (Red, Black)···
2. Remove ① (× 2) and unfold flexible PC board-B in the direction of (➡).
3. Unsolder two lead wires (Green, Orange)
4. Remove ②.
5. Remove ③ (× 2).

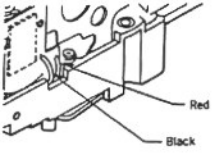

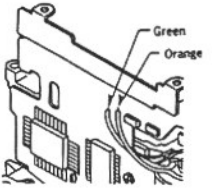

Continued on next page

4 Remove flexible PC board-B.

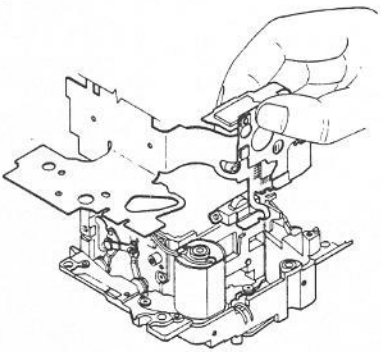

1. Holding portion of IC as shown, remove flexible PC board-B.

■If not removing SPC holder, unsolder flexible PC board from SPC holder.

5 Replace flexible PC board-B.
(Flexible PC board-B set replacing p. 13)

■If not removing SPC holder, solder SPC holder.

6 Install flare shield plate.

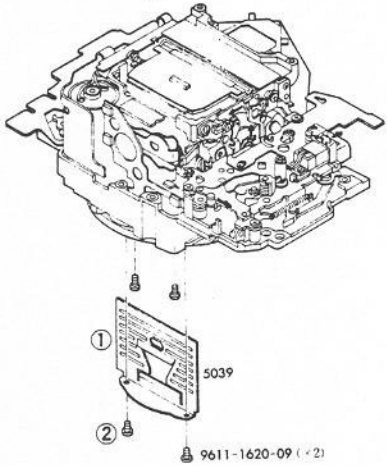

1. Lifting up mirror, attach ①.
   Do not make clearance.
2. Tighten ②.

Completion of flexible PC board-B set replacing.

Install mirror box assembly.
(P. 52~57)

5. AF drive set replacing

1 Remove mirror box assembly.
(Mirror box assembly removing p. 48~51)

2 Remove coupler lever.

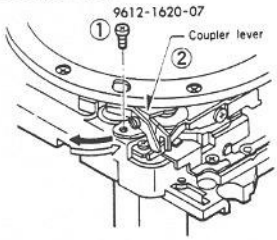

1. Remove ①.
2. Remove ② in the direction of (➡).

3 Remove screw holding flexible PC board-B.

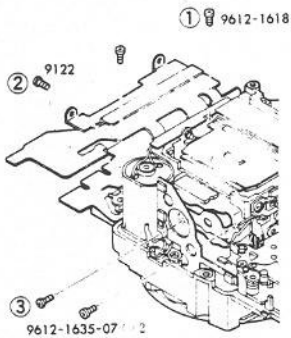

1. Unsolder two lead wires (Red, Black)
2. Remove ① (× 2) and unfold flexible PC board-B.
3. Unsolder two lead wires (Green, Orange).

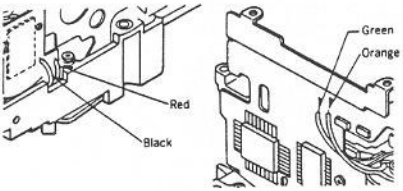

4 Remove flexible PC board-B.

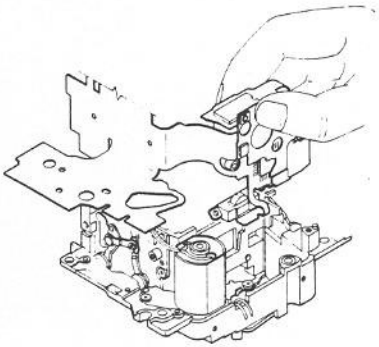

1. Holding portion of IC as shown, remove flexible PC board-B.

Continued on next page

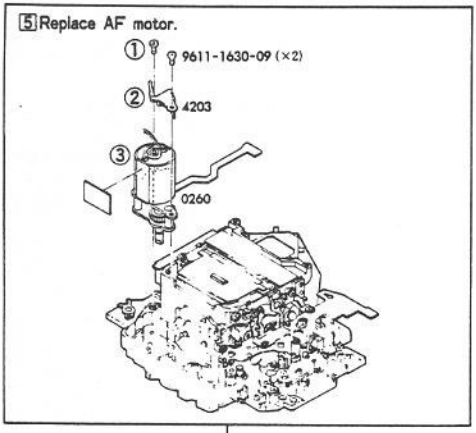

1. Remove ① (× 2).
2. Remove ②.
3. Remove and replace ③.
4. Install ②.
5. Tighten ① (× 2).

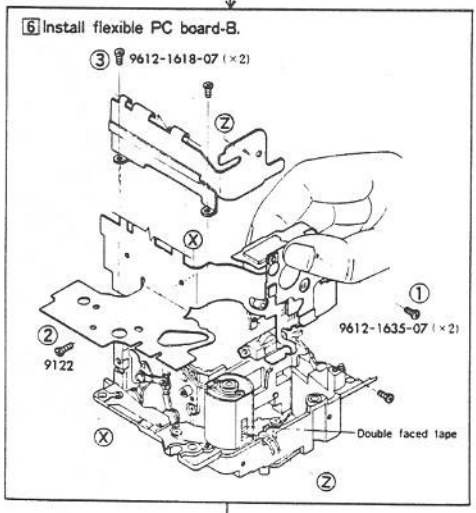

1. Install flexible PC board-B.
2. Tighten ① (× 2).
3. Secure flexible PC board-B with ②.
4. Solder lead wires (Fig. 1).
5. Fold flexible PC board-B, and tighten ③ (× 2).
6. Engage flexible PC board-B with the claw of shield plate and solder lead wires

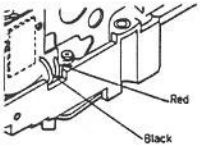

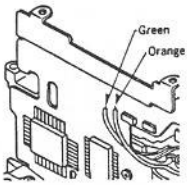

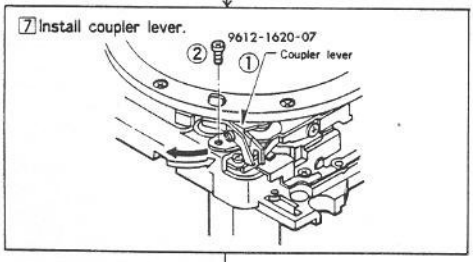

1. Install ① in the direction of (⇨) and tighten ②.

AF coupler adjusting p. 18

Completion of AF drive set replacing.

Install mirror box assembly. (P. 52~57)

6. Winding gear base plate set replacing

1 Remove charge plate.

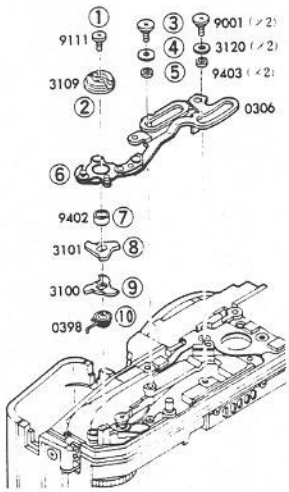

1. Remove ①, ②.
2. Remove ③ (× 2), ④ (× 2), ⑤ (× 2).
3. Remove ⑥.
4. Remove ⑦–⑩.

2 Counter base plate set removing.

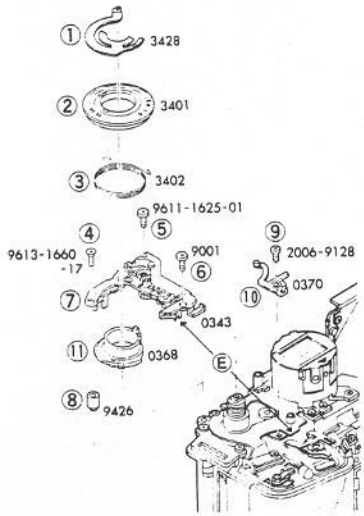

1. Remove ① and ②, ③.
2. Remove ④–⑥.
3. To remove ⑦, ⑧, unsolder Ⓔ (⑦) from flexible PC board-A.
4. Remove ⑨ and ⑩, ⑪.

Continued on next page

3 Pressure plate set removing.

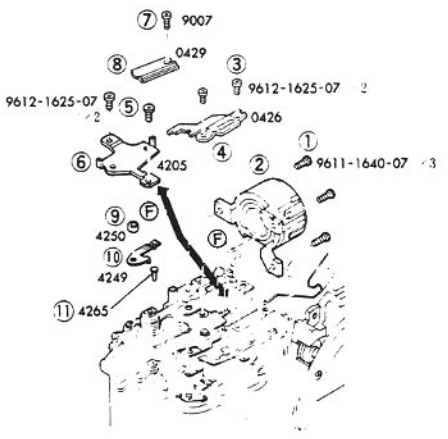

1. Remove ① (× 3).
2. Unsolder ② (× 2) (Fig. B ④).
3. Turn over ② as shown, and remove ③ (× 2), ④.
4. Remove ⑤ (× 2).
5. To remove ⑥, disengage flexible PC boards F and A from the claw of ⑥.
6. Remove ⑦, ⑧.
7. Remove ⑨ and ⑩, ⑪.

4 Winding lever plate removing.

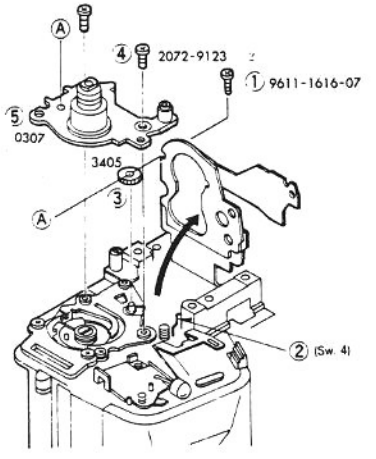

1. Remove ①.
2. Unsolder ②.
3. Remove ③.
4. Remove ④ (× 2) and ⑤.

Continued on next page

5 Winding axis removing.

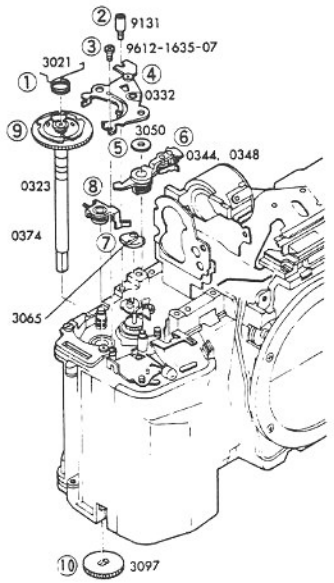

1. Remove ①.
2. Remove ②, ③ and ④.
3. Remove ⑤.
4. Turn 3054 over and remove ⑥.
5. Remove ⑦, ⑧.
6. Remove ⑨, ⑩.

6 Winding gear base plate removing.

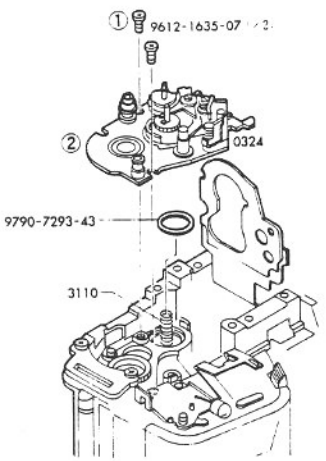

1. Remove ① (× 2).
2. Remove ②.
   (Note that 9790-7293-43, 3110 will come off at the same time).

Continued on next page

7 Replace winding gear base plate.

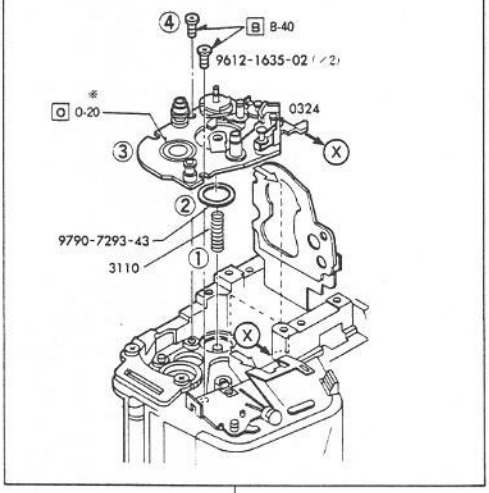

1. Install ①, ②.
2. Install ③ in the direction of (⇨) with Ⓧ engaged as shown.
   • Install ③ by turning spool and sprocket.
3. Tighten ④× 2.

※Apply compound evenly

α oil	+	Flonsolve
1	:	9

8 Install winding axis.

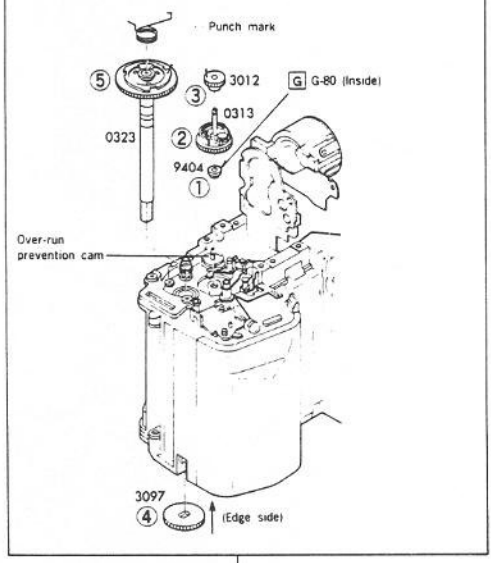

1. Align V groove of over-run prevention cam with ②.
2. Install ①. Install ② with Ⓨ aligned with Ⓨ of reversing prevention lever B.
3. To install ③, engage portion "[illegible]" on reverse side with lever of ②.
4. Place and hold ④ in position.
5. Install ⑤ with punch marks aligned with ③.

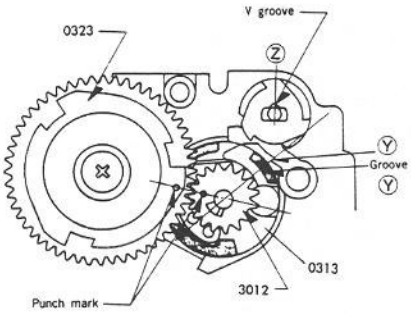

9 Assemble winding gear base plate set.

Assemble parts following procedures ③ and after, of "Winding gear base plate set assembling" (p. 21).

Continued on next page

10 Install charge plate.

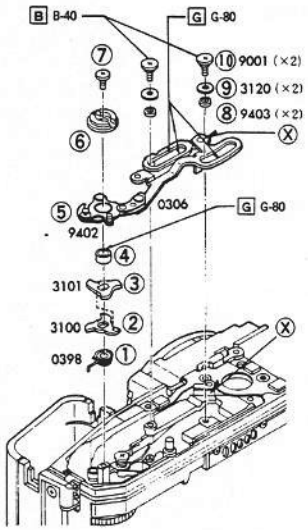

1. Install ①.

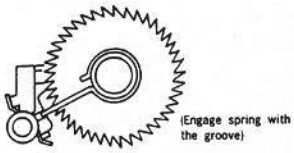

2. Install ②, ③ with punch marks aligned.
3. Install ④.
4. Install ⑤ with Ⓧ alinged with Ⓧ on body.
5. Install ⑥ with ⑦.
6. Install ⑧ (× 2), ⑨ (× 2), and tighten ⑩ (× 2).

Install film advance lever temporarily and adjust over-run. (P. 2)

11 Install flex pressure.

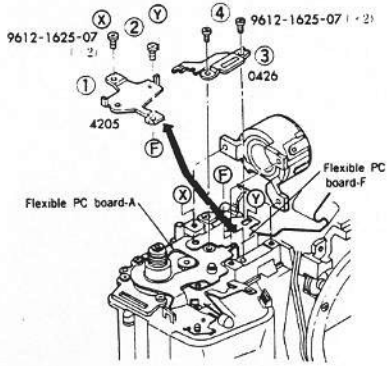

1. Place ① under flexible PC board-A and tighten ② (× 2).
2. Engage flexible PC boards A and F with the claw of ①.
3. Placing ③ on flexible PC board-F and tighten ④ (× 2).

Continued on next page

12 Install data panel block.

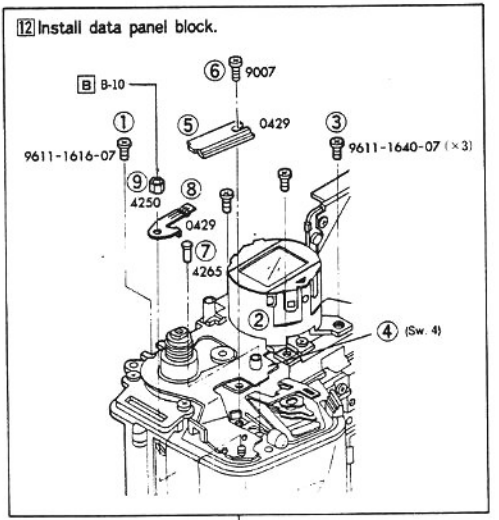

1. Tighten ①.
2. Place ② and tighten ③ (× 3).
3. Soldering lead wires ②. (Fig. B-④)
4. Soldering ④.
5. Placing ⑤ on flexible PC board-A, tighten ⑥.
6. Install ⑦, ⑧ and tighten ⑨.

13 Install counter base plate.

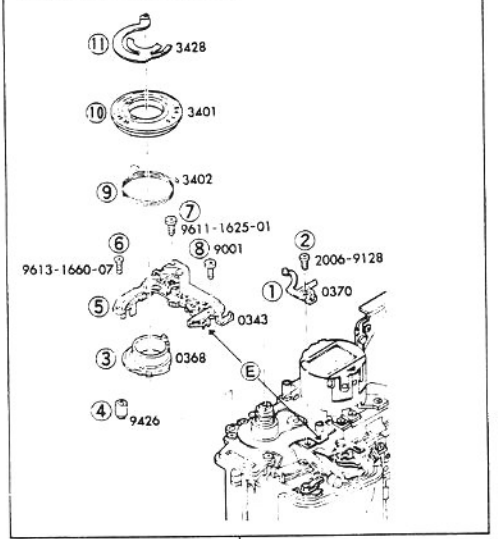

1. Install ① with ②.
2. Install ③.

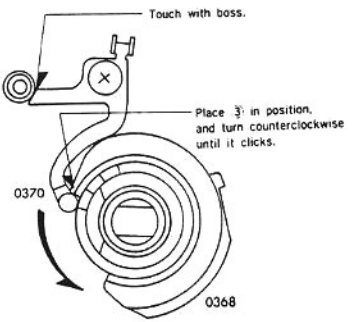

3. Install ④, ⑤.

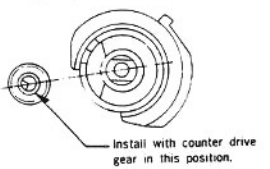

4. Install ⑥–⑧.
5. Solder Ⓔ (⑤) on flexible PC board-A.
6. Install ⑨, ⑩.
7. Charge ⑩ by turning clockwise once, and install ⑪.

Lead wire arrangement (P. 11)

Check operation

With film advance lever, back cover, lens, battery (or battery adapter) attached, check operation of winding, releasing, indication, AF.

Install external parts P. 11~12

Adjusting

7. In-finder LCD replacing (repairing of LCD breakage)

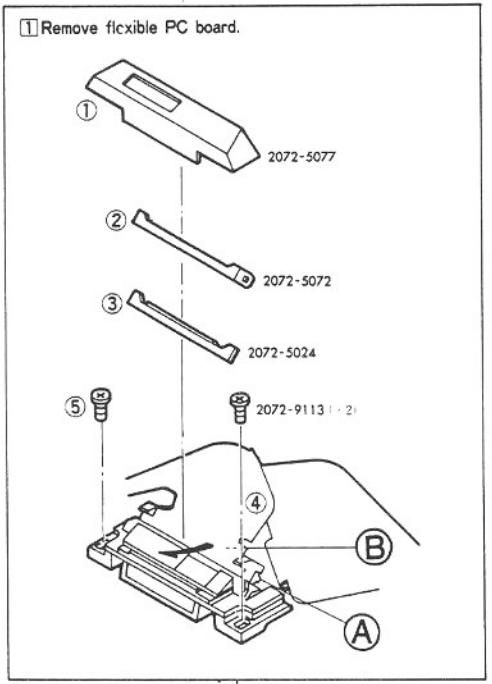

1. Remove ①.
2. Remove ②, disengaging it from Ⓐ (× 2).
3. Remove ③.
4. Detach ④ from Ⓑ in the direction of ➡.
5. Remove ⑤.

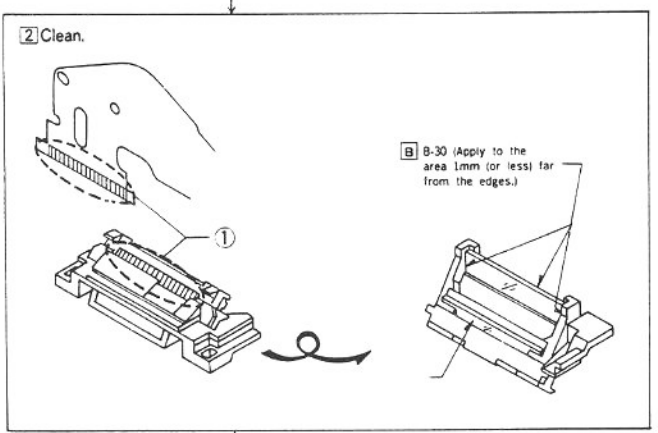

1. Clean ①, using flonsolve. (Remove adhesive completely.)
2. Turn over in-finder set. Apply B-30 on mirror to reinforce it. (Because flonsolve gets between mirror and in-finder prism, reinforcement is necessary.)

Continued on next page

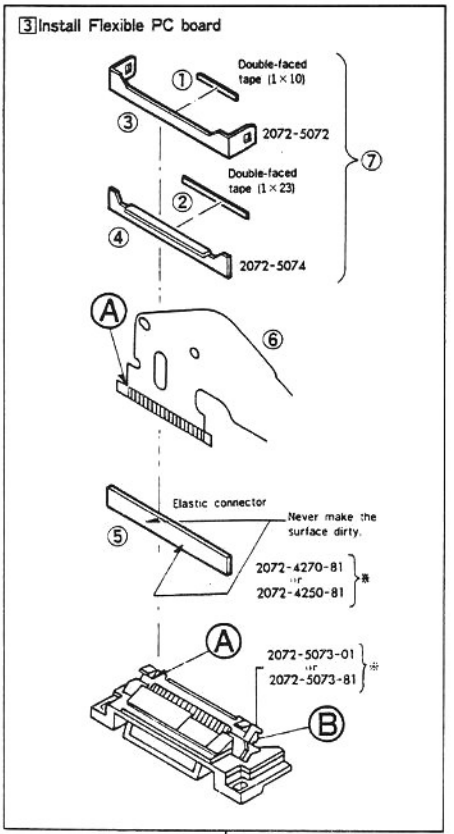

1. Size double-faced tape to ① and ②.
2. Adhere ①–④.
3. Install ⑤.
4. Install ⑥, setting Ⓐs together.
5. Install ⑦, engaging ③ with Ⓑ (× 2).

※Combination of 2072-4250, 4270 and 2072-5073. (Use as a set)

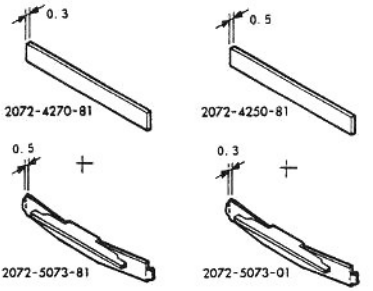

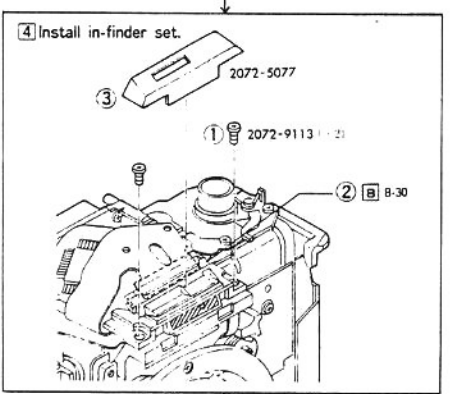

1. Tighten screws ① (× 2).

Check that indication is ON. Adjust position of in-finder set. (P. 8 Fig. 1)

2. Apply B-30 to flexible PC board and in-finder pressure-B.
3. Install ③.

Install external parts. (See p. 11~12.)

Adjusting

8. Main mirror replacing

1 Assemble external parts. (P. 11~12)

2 Remove mirror box assembly.

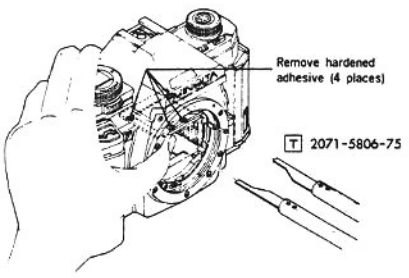

1. Lifting up mirror-holder slightly with finger, insert mirror-remover (2071-5806-75) between mirror and mirror holder.
2. Cut off bond. (× 2). (Bayonet side).
3. Placing mirror-remover along both sides (right & left) of mirror holder, cut off bond (× 2). (Back cover side).
   - Be careful not to remove light shield sheet.
4. Remove bond left on mirror holder, using cutter knife or the like.

3 Attach mirror.

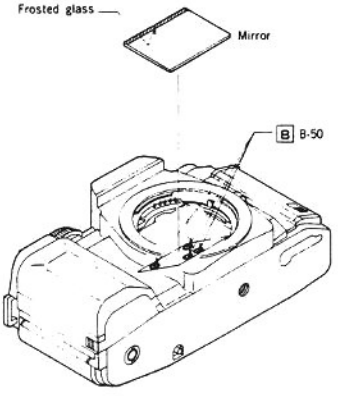

1. Apply B B-50 on mirror holder. (the same positions as before)
2. Paying attention not to touch with applied bond, insert to stop position and place on mirror holder.
3. Leave the camera for 24 hours, facing bayonet mount side up.

Adjusting

Measuring instruments

- Luminance source (MODEL L-2101, *L-222, *L-223)
- EE tester (MODEL EE-2101, EE-2111)
- Shutter tester (MODEL S-2201, S-2101)
- Time counter (MODEL TC-1)
- Digital multimeter (Type 2508, *3476, *2507)
- Camera I/O tester (MODEL IO-5101)
- Strobo tester (MODEL ST-Ⅲ)
- 1000mm collimator (MODEL RC-1000 Ⅲ, *Ⅱ, *Ⅰ)
- DC power supply (MODEL 524B, *E-1, *E-2)

(Items marked "※" have been discontinued)

Exclusive tools

Tool No. 2071-0001-75

Adjusting back cover

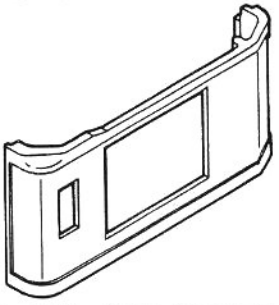

Tool No. 2071-0003-75

Tripod attachment collar

Tool No. 2071-1092-75

Power suplly adapter

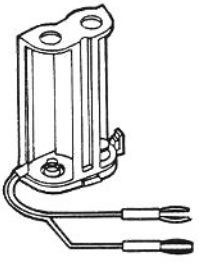

Tool No. 2071-3066-75

Top cover pressure spaner

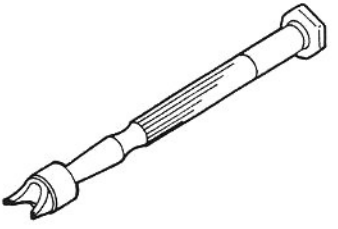

Tool No. 2071-3324-75

Pressure nut spaner

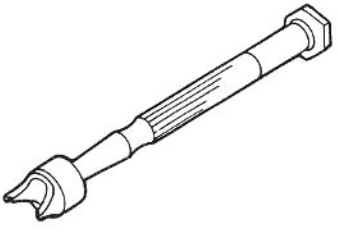

Tool No. 2071-5147-75

VB adjuter

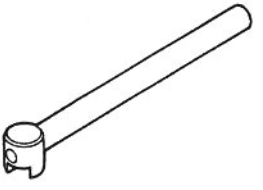

■Tool No. 2071-5170-75

Sub mirror adjuster

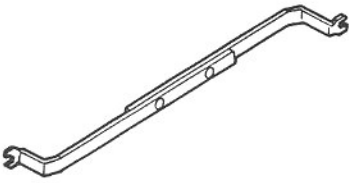

■Tool No. 2071-5806-75

Mirror remover

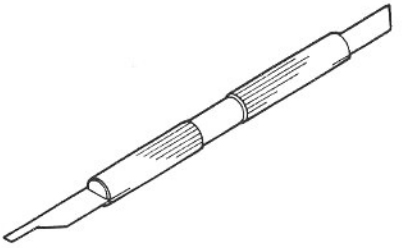

■Tools used in common

■Tool No. 2017-0001-75

Strobo level adjuster

■Tool No. 2072-0001-75

Master lens

■Tool No. 2072-0002-76

AF adjusting tool

■Tool No. 2072-0003-75

Tripod attachment

■Tool No. 2072-0004-75

AF chart Ⅰ

■Tool No. 2072-0005-76

AF chart Ⅱ

■Tool No. 0026-9114-77

Top cover stopper spaner

■Body back gauge

■Flat plate (for 2005)

■Dial gauge

■Reflection paper (1.3m × 2m)
·····Seamless paper #22 (Supprior make)

■Hexagon wrench (1.5)

■Subsidiary materials

■Grease
- G-50
- G-70
- G-80

■Oil
- O-10
- O-20

■Adhesives
- B-10
- B-20
- B-30
- B-40
- B-50
- B-60

■Anti-diffusion compound
- A-20

■Cleaner
- Flonsolve

TROUBLE SHOOTING

1. Introduction

This Trouble-Shooting covers symptoms and causes of troubles found on camera side. Even when the trouble is found on camera side, the cause may lie in the related accessories. Use this chart, checking trouble with/without accessories on the camera depending on trouble.

2. Description

1. This Trouble Shooting Chart is classified mainly into TROUBLE SHOOTING CHART and TROUBLE SHOOTIG MANUAL, which can be used properly depending your desire.

TROUBLE SHOOTING CHART

- Provides you with significant points of troubles (symptoms, causes), including contents for Trouble Shooting manual.

TROUBLE SHOOTING MANUAL

- Provides you with detailed trouble causes, including proper measures, and check points etc.
- Also provides you with checking method by YES-NO answering so that you can find out cause easily.

2. Trouble described here is due to a single case only. Trouble due to a plurality of causes should be checked collectively on the basis of the causes listed in this chart.

3. Repair Procedure

1. Check the causes in the following order.

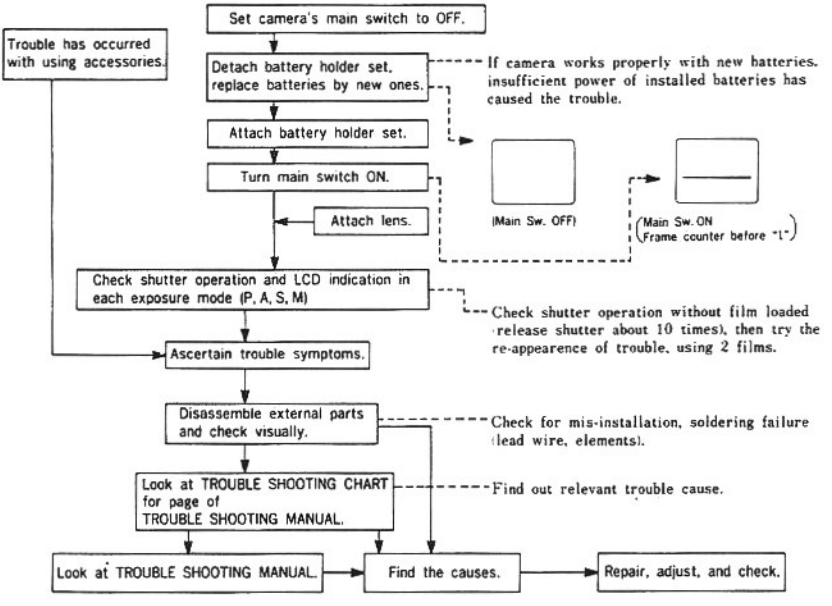

2. If trouble does not reappear.
   - Check operation by releasing shutter about 100 times (battary holder side, lens side up) with film loaded. (Attach user's batteries and lens.)
   - Check operation about user's complaint and trouble symptom when received.

4. Servicing Precautions

1. Check voltage using degital multi meter (but not necessarily when input impedance is more than 10MΩ).
2. Use circuit tester whose voltage is 3V or less to check circuit connection.
3. Trouble is most unlikely to occur in electronic parts, such as ICs, diodes, transistors, resistors, and capacitors. Therefore, check the cause of trouble, with the focus on the defective soldering of lead wires and electrical parts, and switching contacts.
4. When checking soldered or plated parts, avoid pressing the parts or pulling lead wires unnecessarily.
5. Since voltage measuring parts are narrow, mount a pin or something similar at the tip of an alligator clip for measurement.
6. When measuring switching patterns, special care should be taken so that the patterns out-side switch operation are free from flaws. For switch contacts, measure their base, which is not directly affected by contact pressure.
7. Be sure to turn off the power switch before removing electrical parts (when a constant-voltage regulated power supply is used).
8. The ideal temperature range for the soldering iron tip is 290°C to 340°C. If the temperature is higher, however, perform soldering quickly. Also, be sure to clean the tip when soldering.
9. Be careful with static electricity when handling IC.
10. When using DC power supply, set at 3V, 1A.

CONTENTS

1 TROUBLE SHOOTING CHART

Page

1. Shutter releasing failure
   - Trouble symptoms with power supplied 1
   - Trouble symptoms with Sw. 1 ON 1
   - Trouble symptoms with Sw. 2 ON 1
   - Other releasing failure 2
2. Mirror operation failure 3
3. Film transport failure
   - Winding failure 4
   - Rewinding failure 5
4. Display failure only
   - Trouble symptoms at attaching battery holder 6
   - Trouble symptoms with Sw. M ON 6
   - Trouble symptoms with Sw. 0, 1 ON 6
   - Other display failures 7
5. Exposure failure
   - Underexposure 9
   - Overexposure 10
   - Other exposure failure 11
6. AF/Manual focusing failure
   - AF operation failure 12
   - AF and manual focusing failure 12
   - Operation failure in manual focus mode 12
   - Other AF operation failure 12
7. Operation failure about self-timer, piezo buzzer, film speed, preview, exposure mode changeover, metering-mode changeover, key switch changeover
   - Self-timer operation failure 13
   - Piezo buzzer operation failure 13
   - Film speed setting failure 14
   - Preview operation failure 14
   - Exposure mode changeover failure 15
   - Metering mode changeover failure 15
   - Key switch changeover failure 16
8. Operation failure using accessories
   - Operation failure with exclusive flash 17
   - Operation failure using MD-90 18
   - Operation failure using Program Back 18
9. Other failures
   - AE lock failure 19
   - Battery drains sharply 19
   - Light leakage 19

2 TROUBLE SHOOTING MANUAL

(Find the page of troubles, in "1 TROUBLE SHOOTING CHART".)

- Servicing measures against "mirror stays up" 59
- Precaution for replacing mirror-operation plate set 61
- Servicing measures against "with motor drive, continuous winding (2-3 frame) in single advance mode" 62
- Spot-metering area checking/adjusting 63
- Servicing measures against "in-finder segments OFF" 64
- Current leakage checking 66

3 Switch and electrical element checking

4 Function of switches

Schematic wiring diagram

Electrical elements locating (on flex PCB-A) diagram

Electrical elements locating (on flex PCB-B) diagram

Electrical elements locating (on flex PCB-D) diagram

1 TROUBLE SHOOTING CHART

Description of chart

- Switches : Circled ; short circuit (Switch may remain ON.) Uncircled ; contact failure.
- Lead wire : Circled ; short circuit with GND (or short circuit with next lead wire). Uncircled ; contact failure or disconnection.
- Electric elements : Circled ; short circuit. Uncircled ; cold soldering or defect.
- Mechanical and other causes : Two layers……connection of flexible PC board -A and -B sets.
- Three layers……connection of flexible PC board -A, -B, and -D sets.
- Flexible PC board-A set : flex PCB-A.

1. Shutter releasing failure

Symptoms	Page	Switches	Lead wires	Electrical elements	Mechanical and other causes
■ Trouble symptoms with power supplied					
(1) Camera not powered at all. All LCDs remain OFF when Sw. M ON. No operation at all. Only stand-by display appears. Metered value does not appear when Sw. 0 ON. No operation. "ISO 100" blinking does not stop when Sw. M & ISO key ON.	21	30 ㉚	1 (Black) 2 (Red) 4 (Orange) 5 (Green) ④ (Orenge) ㉑ (Black)—C_{38} 5 (Green)—18 (White) reversed ⑤ (Green) ② Red)	• DC/DC converter PCB • Flex PCB-A R_{33}, Q_{16}, C_3, C_{27}, C_{38}, XL_1, IC_1, IC_4 • Flex PCB-B R_{28}, R_{27}, R_{27}, Q_5, Q_5, C_5, IC_6	• Cartridge contact pin : adhesion of Alteco inside the bush. • Connector pressure plate set : rubber off. • Flex PCB-A (at Sw. 30) : soldering failure…short circuit of Sw. 30. • Battery contact : deformation ; stain. • Release base plate (GND printed wire) :disconnection. • Flex PCB-A (Sw. 30-IC_1 ㉑) : disconnection. • Three layers A_{11}, A_{12} : contact failure.
(2) Shutter releases by attaching battery holder. (With Sw. M OFF)	22			• Flex PCB-A IC_4	
(3) Shutter releases by attaching battery holder. (With Sw. M ON)	22	②		• Flex PCB-A C_{29}	
■ Trouble symptom with Sw. 1 ON					
(1) Shutter releases by Sw. 1 ON.	22	1-2		• Flex PCB-A IC_1	
■ Trouble symptoms with Sw. 2 ON					
(1) No shutter releasing. (no aperture ring operation)					
① With normal display.	22	2 ④		• DC/DC converter PCB • Flex PCB-A IC_1, IC_4	• Flex PCB-F : disconnection ($V_{DD}0$). • Aperture charge lever (0255) : riveting failure of roller. • Shutter screw (9611-2040-01) : looseness. • Mirror-up sub-lever axis : riveting failure. • Return trigger lever spring (2557) : off position.
② With no display. (Camera not powered at all)	22			• Flex PCB-A C_3, XL_1, IC_1 • Flex PCB-B IC_6	

Symptoms	Page	Switches	Lead wires	Electrical elements	Mechanical and other causes
(2) No shutter releasing with normal aperture ring operation.	23			• SL_3 • Flex PCB-A IC_1, IC_4	• Flex PCB-F : contact failure (SL_3) • Mirror-up sub-lever's spring : breakage. • Flat spring for mirror up lever : grease shortage.
(3) Shutter releases normally first ; no 2nd shutter releasing.					
① LCDs disappear after releasing.	23		⑧(Red)—⑩(Purple)		
② LCDs remain ON after releasing.	23	4		• Flex PCB-A IC_1	
(4) No-slit shutter (Shutter runs normally but no-slit shutter)					
① Self-timer LED and illumination LED light ON normally.	23		8 (Red) 6 (Yellow) ⑥-⑦(White) 6-7 reversed	• SL_5 • Flex PCB-A IC_1	• Shutter magnet : E-ring off
② No illumination LED lighting.	23			• Flex PCB-A IC_1	
③ Illumination LED blinks with self-timer operation.	23			• Flex PCB-A IC_1	
④ No illumination LED lighting with self-timer operation.	23			• Flex PCB-A IC_1	
⑤ No-slit shutter with mirror up by pressing preview button.	23			• Flex PCB-A IC_1	
(5) Noticeable time-lag from Sw. 2 ON to releasing.	23	2			
(6) 2nd shutter not travel.	23		⑦(White)		
■ Other releasing failure					
(1) No shutter releasing with remote cord.	24				• IC_1 ㉙-A_{44} : disconnection. • Remote control contact (R_3) : contact failure.
(2) Shutter releases by opening back cover.	24	CNT 1 CNT 2			
(3) Shutter releases by winding simultaneously	24				
① Trouble occurs without batteries…… mechanical cause ; no-slit shutter.	24			• SL_3	• Mirror-up lever : jams on mirror stop lever. • SL_3 : bond on magnetic surface.
② Trouble occurs only at inserting batteries……electrical cause ; normal shutter operation.	24	②	SL_3 (White)	• Flex PCB-A C_{20}	
(4) Shutter releases by pressing AEL button.	24			• Flex PCB-A IC_1	

2. Mirror operation failure

Symptoms	Page	Switches	Lead wires	Electrical elements	Mechanical and other causes
(1) Mirror stays up and no more winding occurs.	25				• 1st & 2nd shutter blades : piled up. • 2nd shutter blade shock absorber & mirror return lever : off position • Mirror-up sub-lever axis : riveting failure. • 2nd shutter stop : hard to disengage. • Sub-mirror : operation failure.
(2) Mirror stays half-way up.	25				• Mirror holder : arm off.
(3) No mirror operation. (Same symptom occurs with no shutter releasing)	25				• Mirror-up sub-lever : spring off. • Mirror : hard to disengage. • Mirror-up sub-lever & mirror stop lever : not engaged securely.
(4) With operating-button held down, mirror moves up before winding completion.	25				• Sw. 4 lever : riveting failure.
(5) Mirror moves half-way up by pressing operating button before winding completion.	25				• Winding stop release lever (0348) : deformation.
(6) Mirror not return to its position when releasing with camera's penta-prism side down.	25				• Mirror-down spring : off position

3. Film transport failure

Symptoms	Page	Switches	Lead wires	Electrical elements	Mechanical and other causes
■ Winding failure					
(1) No winding.	26				• Mirror charge lever (0390): deformation. • Winding stop release spring (3049): off position. • Mirror-stop lever: spring off. • Mirror charge spring (3091): off position.
(2) Any number of winding (cocking) is possible without shutter releasing.	26				• Return stop lever (0246) adhesion of bond. • Return stop lever spring (2464): off position. • One-way cam (3017): returning failure. • Charge spring (3105): off position. • Charge plate set (0306): riveting failure. • Screw (9004): looseness
(3) After multiple exposure, the setting is not canceled.	26				• Multiple-exposure lever set (0374): deformation. • Sprocket idle gear set (0313): riveting failure. • Film reverse running stopper: adjusting failure.
(4) No multiple exposure.	26				• Reversing prevention lever-B: jams on sprocket idle gear set (0313) • Multiple-exposure lever (0374): breakage. • Multiple-exposure spring (3077): breakage.
(5) Multiple-exposure button not return.	26				• Top cover: mis-installing. • Counter return spring (3402): catching. • Spacer (3050): breakage.
(6) Irregular winding sound.	27				• Springs (3010, 3136): resonance.
(7) Mirror moves up slightly by several short-strokes.	27				• Mirror box set: defect
(8) Film advance lever not return.	27				• Winding lever pressure (1344): B-10 (Screw Lock) off position.

Symptoms	Page	Switches	Lead wires	Electrical elements	Mechanical and other causes
(9) Irregular sound at end of stroke.	27				• Rubber (3119) : off position.
■ Rewinding failure					
(1) Irregular rewinding sound.	27				• Flex PCB-G : contact w/ rewinding gears. • Rewinding gears : contact w/ isolation sheet (5011).
(2) Rewind-release not return.	27				• Rewind button holder set (0311) : deformation.

4. Display failure only

Symptoms	Page	Switches	Lead wires	Electrical elements	Mechanical and other causes
■ Trouble symptoms at attaching battery holder (With Sw. M OFF)					
(1) Stand-by display ON. Sw. M, 0, 1 OFF	28	Ⓜ			
(2) "ISO 100" blinks before frame "1". Sw. M, 0, 1 OFF	28	CNT 1		• Flex PCB-A IC_1	
(3) All LCDs ON. Sw. M, 0, 1 OFF	28			• Flex PCB-A IC_2 • Flex PCB-B R_8, IC_2	
(4) Illumination LED lights ON.	28			• Flex PCB-A IC_4	
■ Trouble symptoms with Sw. M ON					
(1) Initial load display appears by Sw. M ON. Sw. M ON, Sw. 0, 1 OFF	28	⓪ ① AEL ㉑ ㉒		• Flex PCB-A R_1	
(2) All LCDs OFF by Sw. M ON. Sw. M ON, Sw. 0, 1 OFF	29			• Flex PCB-A XL_2, IC_1, IC_3 C_1, C_3, C_{10} C_{11}, C_{12}, C_{30}, C_{32} • Flex PCB-B R_4, R_{26}, IC_2	
■ Trouble symptoms with Sw. 0, 1 ON					
(1) With frame number before "1". ① Stand-by display appears. Sw. M, 0, 1 ON	29	0		• Flex PCB-A R_2, C_4 IC_1	
② Initial load display blinks dimly. (Dim) Sw. M, 0, 1 ON	29			• Flex PCB-A IC_3	

Symptoms	Page	Switches	Lead wires	Electrical elements	Mechanical and other causes
③ All LCDs OFF with Sw. 0 ON. Sw. M, 0 ON	30			• Flex PCB-A R_1 IC_3 • Flex PCB-D	
(2) With frame number "1" or after.					
① No illumination LEDs ON.	30		⑪(Red)— ⑫(Yellow)		• LED PCB printed wire : short circuit.
② Illumination LEDs and self-timer LED light ON simultaneously.	30			• Flex PCB-A IC_4	
■ Other display failures					
(1) All displays OFF in finder only. Sw. M. 0. 1 ON No display	30				• In-finder mirror-A, -B (5813, 5814) : off position. • In-finder set : defect.
(2) Some segments OFF in LCD. Sw. M. 0. 1 ON					
① Same segments OFF on body and in finder LCDs.	30			• Flex PCB-A IC_3	
② Some segments OFF on body LCDs.	31			• LCD_1 (4245)	• Connector (4248) : stain.
③ Some segments OFF in finder LCDs.	31				• Flex PCB-A & LCD-2 (4246) : contact failure.
(3) All LCDs OFF on body only.	31				• LCD-1 (4245) : reversed.
(4) All LCDs disappear at releasing completion.	31		SL_3 (Red)		
(5) All LCDs disappear with exposure mode "M".	31			• Flex PCB-A IC_3	
(6) In-finder LEDs ("▷ ◁" "⚡" and illumination LEDs) dimly ON.	31				• LED PC board : defect.
(7) Display not disappear by detaching battery holder. (disappear gradually)	31	30			
(8) Low power indication appers at AF motor operation.	31			• R_{11}	
(9) All LCDs dimly ON.	32			• Flex PCB-A IC_3	
(10) No "F" display.	32			• Flex PCB-A IC_3	
(11) All LCDs not disappear by Sw. M OFF (disappears 10 sec after)	32			• Flex PCB-A IC_3	
(12) Metered values disappear at once by Sw. 0, 1 OFF. (without 10 sec holding)	32			• Flex PCB-A IC_1	

Symptoms	Page	Switches	Lead wires	Electrical elements	Mechanical and other causes
(13) Metered values not disappear regardless of 10 sec display-holding after Sw. 0, 1 OFF.	32			• Flex PCB-A R_2, IC_1	
(14) "⚡" LED blinks by attaching battery holder.	32			• Flex PCB-A IC_3, IC_4	
(15) Some segments are darker than others.	33			• Flex PCB-A C_9, C_{36}, IC_3	
(16) Focus indication LED failure.					
① ▷ ◁ glow simultaneously.	33		(16) White)— (17) Blue)	• Flex PCB-B IC_6	
② ▷ ◁ glow simultaneously.	33		(15) Purple)— (16) White)	• Flex PCB-B IC_6	
③ ▷ not glow.	33		16 (White)	• Flex PCB-B IC_6, R_{14} • LED PC board	
④ ▷ not glow.	33		17 (Blue)	• Flex PCB-B IC_6, R_{15} • LED PC board	
⑤ ◁ not glow.	33		15 (Purple)	• Flex PCB-B IC_6, R_{13} • LED PC board	
⑥ ◁ glows with in-focus subject.	33		16 (White) — 17 (Blue) reversed		
⑦ " " and ◁ glow simultaneously.	33		(14) Green)— (15) Purple)		
⑧ ▷ and ◁ glow reversely.	33		15 (Purpe)— 17 (Blue) reversed		
⑨ ▷ ◁ glow simultaneously.	33			• Flex PCB-B IC_6	
⑩ ▷ remains glowing.	33			• Flex PCB-B IC_6	
⑪ ▷ ◁ not glow at all.	33			• Flex PCB-B R_{46}	• Three layers A_{37}: contact failure.

5. Exposure failure

Symptoms	Page	Switches	Lead wires	Electrical elements	Mechanical and other causes
■ Underexposure					
(1) Underexposure by several stops (difference from minimum aperture) with "F – –".					
① "F" blinks.	34	PV 2		• Flex PCB-A IC_4	
② Shutter speed changes corresponding to luminance change.	34			• Flex PCB-A R_{26}, R_{38}, R_{39}, IC_1 • Flex PCB-E R_{20}, R_{21}, R_{22}	• Lens signal contact : contact failure (L_1, L_2, L_3, L_4). • Flex PCB-A & -E : soldering failure (L_1 ~ L_5)
③ "⚡" blinks.	34			• Flex PCB-A IC_1, IC_3, IC_4 R_{23}	• Flex PCB-A & -E : soldering failure (Vcc-133 short circuit)
④ "F – –" appears by winding.	35				• SL-1 : magnetic failure.
⑤ Other cases with "F – –"	35			• Flex PCB-A IC_4 • Flex PCB-B IC_2	• Three layers A_{13} : contact failure.
(2) Always minimum aperture with normal display.					
① Minimum aperture regardless of setting.	35		SL_{2} White		
② Minimum aperture at other setting than maximum. (Normal AE at max setting)	35			• Flex PCB-A C_{14}, C_{15}, IC_1, IC_4 • Photo-interrupter (4244)	• Flex PCB-A & -F : contact failure.
(3) Underexposure regardless of out of range (over) display with 1/4000 sec & f : 22	36			• Flex PCB-A IC_1, IC_3, IC_4 • Flex PCB-B IC_2, C_5, VR_1, VR_3, R_4, VR_2, R_5	• Three layers A_{14} : contact failure.
(4) Fastest shutter speed & min aperture setting (1/4000 sec & f : 22) after frame "1"…… initial load setting not released.	36	CNT 1 CNT 1-2		• Flex PCB-A IC_1	
(5) Sometimes initial load setting (1/4000 sec & f : 22) appears.	36				• Counter base plate set (0343) : defect.
(6) 1 or 2 stops smaller aperture than displayed aperture.	36			• Flex PCB-F • C_{14}	

Symptoms	Page	Switches	Lead wires	Electrical elements	Mechanical and other causes
(7) 1/3000 & f:22 stays on.	36			• Flex PCB-B R_3	
■ Overexposure					
(1) Overexposure regardless of out of range (under) display with 30 sec & f:1.7. 30 F 1.7 Sw. M. 0. 1 ON	37			• Flex PCB-A IC_1, IC_4, IC_3 • Flex PCB-B R_3, SPC, R_7 IC_2, IC_6 R_4, R_7	
(2) Always maximum aperture with normal display.					
① With SL-1's operation sound (preset magnet moves but not aperture ring) OR. preview operation does not work (aperture not stop down, "F" blinks though.)	37		SL-2 (White)	• Flex PCB-A IC_4, IC_1	• SL-2 : defect. • Flex PCB-A & -F : contact failure (415) • Sector gear stop lever spring : off position. • Aperture ring : off position.
② No SL-1's operation (no "F" blinks with preview operation)	37			• Flex PCB-A IC_1, IC_4	• Transmit axis set (0241) : riveting failure. • Sector gear set (0231) : operation failure. • Trigger lever : riveting failure. • Aperture stop gear set (0247) : defect. • Preset magnet lever spring : off position. • Preset magnet lever : E-ring off. • Flex PCB-A & -F : soldering failure (421).
(3) Aperture ring stops at larger aperture side than "F" setting.	38			• Flex PCB-A C_{21}, C_{13}	• Transmit axis set (0241) & first gear (2541) : off position.
(4) Maximum aperture with low battery power.	38				• SL-2 magnetic failure.
(5) 2nd shutter not travel.	38		⑦ (Yellow)		
(6) Shutter speed tends to be slower at high speed setting.	38				• 2nd shutter blade gear : worn out.
(7) Shutter speed is slower than setting at slow setting with AE.	38				• A/D converting reference voltage (1152mV) : adjusting failure.
(8) Overexposure at other than max (full-opening) setting.	38				• Aperture blade (on lens) : operation failure.

Symptoms	Page	Switches	Lead wires	Electrical elements	Mechanical and other causes
■ Other exposure failure					
(1) Unstable metered value.	39			• Flex PCB-A IC_3, IC_4 • Flex PCB-B IC_2, SPC	
(2) Shutter speed and aperture stay at 1/250 and f : 5.6.	39			• Flex PCB-B IC_2 • SPC	
(3) Shutter speed and aperture stay at 1/500 and f : 11.	39			• Flex PCB-B Q_{15}	
(4) At 1/4000 setting, metered-value display on shutter tester continuously changes.	39			• C_{42} : mis-installed	
(5) Aperture becomes smaller 1 stop by winding AF/Manual focusing failure.	39				• Sector gear stop lever set (0223) : riveting failure.

6. Focusing failure

Symptoms	Page	Switches	Lead wires	Electrical elements	Mechanical and other causes
Focus indication LED failure only·····See "4-16" display failure only on p. 8.					
■AF operation failure (Normal operation in manual focus mode)					
(1) Lens not move at all in AF mode.	40		Motor lead (Orange or Red) (Green) ㉔(Gray)	• Flex PCB-B IC_6, IC_9, D_2 • Flex PCB-A IC_1	• Motor : defect
(2) Lens not move from near side to infinity.	40			• Flex PCB-B Q_2, Q_3, Q_1 Q_4, R_{18}, IC_8, IC_9	
(3) Lens not move from infinity to near side.	40			• Flex PCB-B Q_1, Q_4, Q_2 Q_3, R_{19}, IC_6 IC_9	
(4) AF lens moves irregularly near in-focus point or whenever Sw. 0 ON.	41			• Flex PCB-A IC_4, C_{13} • Flex PCB-B IC_6 • PI_2	• Flex PCB-A & -G : soldering failure. • PI-2 & flex PCB-G : soldering failure.
(5) AF motor continues running at near side or infinity end.	41			• Flex PCB-A IC_4	• Flex PCB-A & -G : short circuit.
(6) Shutter is releasable with in-focus subject only.	41			• Flex PCB-A IC_1	
(7) Lens moves to reverse direction of focus signal.	41		Motor lead : reversed		
(8) AF operates without touching operating-button.	41	0			
(9) Focus is not held by Sw. 1 ON.	41	1	30(Green)	• Flex PCB-A IC_1	• Flex PCB-A & release base plate : contact failure (157)
■AF and manual focusing failure Note : Low contrast scanning : Lens moves at a swoop to ∞ or minimum distance side.					
(1) Always "▷ ◁" LEDs blink. (Low contrast scanning in AF mode)	42			• DC/DC converter PCB • Flex PCB-B IC_4, IC_7, IC_8	• AF sensor filter : stain. • Sub-mirror, mirror : stain, dust ; incorrect angle.
(2) No focusing, all LEDs "▷ , ◁" not glow (No AF motor running)	42			• Flex PCB-A IC_1 • Flex PCB-B IC_6	• Three layers : contact failure.
■Operation failure in manual focus mode					
(1) AF motor runs idle at manual focus mode setting.	42	AF/M	24(Gray)	• Flex PCB-A IC_1 • Flex PCB-B IC_6	
■Other AF operation failure					
(1) Irregular sound during AF operation.	42				• Motor : defect.
(2) By attaching battery holder, AF motor runs.				• Flex PCB-B R_{51} IC_6	

7. Operation failure about self-timer, piezo buzzer, film speed, preview, exposure mode changeover, metering-mode changeover, key switch changeover

Symptoms	Page	Switches	Lead wires	Electrical elements	Mechanical and other causes
■ Self-timer operation failure					
(1) Shutter releases immediately without 10 sec delay.	43	SLF		• Flex PCB-A IC_1	
(2) Shutter releases always with 10 sec delay (when Sw. 2 ON)	43	SLF		• Flex PCB-A IC_1	
(3) Self-timer LED not blink at self-timer setting.	43			• LD_1 • Flex PCB-A IC_4	
(4) Self-timer LED always ON.	43			• LD_1	
(5) Illumination LED blinks synchronizing with self-timer clock.	43			• Flex PCB-A IC_4	
(6) "F" blinks by Sw. SLF ON/OFF.	43			• Flex PCB-A IC_1	
■ Piezo buzzer operation failure					
(1) No beeping.	44	BZ	Piezo lead (Red) Piezo lead (Black)	• Flex PCB-A IC_1 R_{34}	• Piezo buzzer set: defect
(2) No beeping with subject in focus.	44			• Flex PCB-A IC_1 • Flex PCB-B IC_6	• Three layers: contact failure.
(3) Beeping by attaching battery holder.	44			• Flex PCB-A IC_1 • Flex PCB-B IC_6	
(4) Beeping at main switch ON position.	44	M			
(5) Loud beeping.	44			• Flex PCB-A R_{34}	
(6) Low beeping.	44				• Piezo buzzer set: defect.

Symptoms	Page	Switches	Lead wires	Electrical elements	Mechanical and other causes
■ Film speed setting failure (Mis-decoding of DX code) Note: For ISO 5000, scratch cartridge to make all CAS contacts 1~6 conductive.					
(1) DX codes are not decoded.	45	CNT 2		• Flex PCB-A IC_3, IC_1	• CAS 1: contact failure
(2) Mis-decoding of DX code.					
① 5000 → 320	45			• Flex PCB-A IC_3	• CAS 4: contact failure. • Three layers A_4: contact failure.
② 5000 → 3200	45			• Flex PCB-A IC_3	• CAS 6: contact failure. • Three layers A_2: contact failure.
③ 5000 → 2500	45			• Flex PCB-A IC_3	• CAS 2: contact failure. • Three layers A_6: contact failure.
④ 5000 → 1250	45			• Flex PCB-A IC_3	• CAS 3: contact failure. • Three layers A_5: contact failure.
⑤ 5000 → 4000	45			• Flex PCB-A IC_3	• CAS 5: contact failure. • Three layers A_3: contact failure.
⑥ 100 → 1600	45			• Flex PCB-A IC_3	• CAS 3 – 4, 4 – 5: short circuit.
⑦ 100 → 200	46			• Flex PCB-A IC_3	• CAS 2 – 3: short circuit.
⑧ 100 → 160	46			• Flex PCB-A IC_3	• CAS 5 – 6, 6 – GND: short circuit
(3) "ISO 100" blinking not stop.	46	31			
■ Preview operation failure					
(1) Aperture ring not stop down.	46	PV 1	26(Brown)	• Flex PCB-A IC_1	• Sw. PV 1 spring: off position. • Flex PCB-A & -F: contact failure.
(2) Aperture ring not return to full-opening.	46				• Preview switch button set: insufficient stroke. • Stop gear lever: Adhesion of Alteco • Mirror box: defect. • Mirror box set & PV base plate: no clearance.
(3) Aperture ring not stop at desired setting. (Always stops at minimum aperture)	46				• Flex PCB-A & -F: contact failure. • Preset magnet lever: E ring missing.
(4) "ISO 100" blinks during preview operation.	46			• Flex PCB-A IC_1	

Symptoms	Page	Switches	Lead wires	Electrical elements	Mechanical and other causes
(5) "F" blinking stops by releasing finger from PV switch.	47	PV 2			
(6) No "F" blinking during preview operation.	47			• Flex PCB-A IC_1	• Flex PCB-A & -F : contact failure (151)
■ Exposure mode changeover failure					
(1) Manual set mark disappear in M mode.	47			• Flex PCB-A IC_3	
(2) In A mode, exposure control & display function as if in P mode.	47	MD_0		• Flex PCB-A IC_1	• Flex PCB-A & -C : contact failure. • No isolation sheet (on 0338)
(3) In S mode, exposure control & display function as if in P mode.	47	MD_1		• Flex PCB-A IC_1	• Flex PCB-A & -C : contact failure.
(4) In M mode, "F – –" appears.	47			• Flex PCB-A IC_1	
(5) In S mode, exposure control & display function as if in M mode.	48	MD_0			
(6) In A mode, exposure control & display function as if in M mode.	48	MD_1			
(7) In S and A modes, exposure control & display function as if in M mode.	48			• Flex PCB-A IC_1	
■ Metering mode changeover failure					
(1) Average metering functions always.	48			• Flex PCB-A IC_3 • Flex PCB-B IC_2, Q_{15}	
(2) Spot metering functions in average setting.	48	Sh Hi		• Flex PCB-A IC_3	
(3) In spot (midtone) setting, highlight readings function. (Exposure is increased by pressing AEL button)	48			• Flex PCB-A IC_3	
(4) In spot (midtone) setting, shadow readings function. (Exposure is decreased by pressing AEL button)	48	Hi		• Flex PCB-A IC_3	
(5) Average metering functions in shadow setting, spot (midtone) metering in highlight setting.	49	Sh		• Flex PCB-A IC_3	
(6) All LCDs disappear in spot setting.	49			• Flex PCB-A IC_3	
(7) 1/4000 blinks with A mode in spot setting	49			• Flex PCB-B IC_2, VR_{11}	

Symptoms	Page	Switches	Lead wires	Electrical elements	Mechanical and other causes
■Key switch changeover failure					
(1) Key switch (+/−, ISO, UP or DOWN) not work.	49	31, 32, 35 36, 37, 38		• Flex PCB-A IC_1	
(2) Other changeover failure.					
① Program line shifts upward by F stop up/down key down.	50			• Flex PCB-A IC_1	
② In M mode, shutter speed becomes faster by F stop up/down key up.	50			• Flex PCB-A IC_1	
③ Program line shifts upward by shutter speed up/down key down.	50			• Flex PCB-A IC_1	
④ ISO display appears by pressing +/− key.	50			• Flex PCB-A IC_1	
⑤ Exposure decreases in half-stop whenever pressing +/− key ON.	50			• Flex PCB-A IC_1	

8. Operation failure using accessories

Symptoms	Page	Switches	Lead wires	Electrical elements	Mechanical and other causes
■Operation failure with exclusive flash					
(1) Data display failure with fully charged flash. (normal flash-firing)					
① Flash ready LED "⚡" not blink.	51		13(Orange) 14(Green) 11(Red)— 12(Yellow)	• Flex PCB-A IC_3	• In-finder set : defect.
② All LCDs dimly ON.	51			• Flex PCB-A IC_3	
③ "⚡" remains ON with Sw. 2 ON.	51			• Flex PCB-A IC_3	
(2) Firing failure with fully charged flash. (Flash ready LED "⚡" blinks)					
① No firing — No firing in any way.	51	X Y	10(Purple) 20(Purple) 21(Black)		• Top cover screw (9125) : looseness. • F_1 terminal : contact failure.
① No firing — No firing with sync terminal used.	51		22(Purple) 23(Black)		• Sync terminal : defect.
① No firing — No firing with CG-1000 used	51		19(Purple)		• Flex PCB-D : defect.
② Always full-firing.	52			• Flex PCB-A IC_4 • Flex PCB-B IC_2	• F_3 terminal : contact failure. • Three layers A_{43} : contact failure.
③ Always brief-firing.	52			• Flex PCB-A IC_4 • Flex PCB-B IC_2 C_8, C_9, R_9	
(3) Flash fires by attaching to camera. (No "⚡" blinking)	52	X	Shutter lead Green 9(Black)— 10(Purple) 20(Purple) —21(Black) 9-10 reversed 20-21 reversed		• Sync terminal : short circuit. • Shutter set lever : touch with X contact.
(4) Not changed to flash mode.	52			• Flex PCB-A IC_4 • Flex PCB-B IC_2	• F_2 terminal : contact failure. • Flex PCB-A & -C : contact failure. • W_8 : contact failure.
(5) AF illuminator not fire.	53			• Flex PCB-B IC_6	• F_2 terminal : contact failure. • F_4 terminal : contact failure ; short circuit.
(6) When flash is connected to sync terminal, electrical shock is given at accessory shoe.	53	Y			• Pin (1061) : operation failure. • Acc. shoe spring : deformation.

Symptoms	Page	Switches	Lead wires	Electrical elements	Mechanical and other causes
■Operation failure using MD-90					
(1) No winding.	53	④		• Flex PCB-A IC_1	• Three layers A_7 : contact failure. • W_4 : contact failure. • $W_3 \cdot W_4$: short circuit.
(2) No rewinding.	53	SLS	3 (Black)-18(White) reversed		• W_5 -GND : short circuit. • Mirror charge spring : touch with Sw. SLS contact.
(3) Rewinding not stop at rewinding completion.	53	SLS	18(White)		• W_5 : contact failure. • Three layers B_1 : contact failure. • Film detect pin : operation failure. • Sw. SLS : no isolation sheet.
(4) Focus-priority not work in F. P mode.	54			• Flex PCB-A IC_1	• W_6 : contact failure
(5) No metering by touching second shutter release button.	54				• W_1 : contact failure
(6) Continuous winding in S (single-frame advance) mode.	54				• W_2 : contact failure • If the problem depends on the way of depressing of operating-button··· See p. 62.
■Operation failure using Program Back					
(1) No imprinting with frame "1" or after.	54	CNT 1		• Flex PCB-A IC_1	• D_2 : contact failure. • Three layers A_{39} : contact failure.
(2) Imprinting occurs during initial loading.	54	CNT 1			• Three layers A_9 : contact failure.
(3) Imprinting occurs by Sw. 0 ON.	54			• Flex PCB-A IC_1	
(4) No intervalometer function.	55				• D_3, D_4 : contact failure. • Three layers A_{44} : contact failure.
(5) No flash charging during intervalometer.	55				• D_3, D_4 : contact failure. • Three layers A_{45} : contact failure.

9. AE lock failure, Sharp battery draining, Light leakage

Symptoms	Page	Switches	Lead wires	Electrical elements	Mechanical and other causes
■ AE lock failure					
(1) Unlocked.	56	AEL		• Flex PCB-A IC_1	
(2) No shutter releasing with AEL button ON.	56			• Flex PCB-A IC_1	
■ Battery drains sharply. (See p. 66)	56				
■ Light leakage. (See p. 58)	58				

2 TROUBLE SHOOTING MANUAL

■Description of Trouble Shooting Manual

Checking item	Causes	Servicing measures	Part position

Checking method similar to conventional YES-NO system. Easy to find significant cause.

Description of general repairing methods other than cold-soldering/ shortcircuit with lead wire.
- Against cold-soldering, absorb previous solder first, re-solder then.

Thick letters show the cause which needs special care.

Defective parts positions are showed (coordinate) on Wiring Schematic Diagram and Electrical Elements Locating Diagram.

※ : • Disconnection of lead wire includes soldering failure, also.
• Short circuit of lead wire with GND means short circuit with mechanical parts at soldering/catching part.

1. Shutter releasing failure

■ Truoble symptoms with power supplied

(1) Camera not powered at all

Checking item	Causes	Servicing measures	Part position
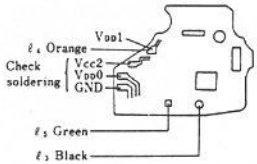	DC/DC converter PCB : defect	Replace DC/DC converter PCB (0450)	
	DC/DC converter PCB & flex PCB-B : soldering failure(Fig)	Re-solder (on both sides)	
	Sw. 30 : short circuit	Replace double-faced tape on flex PCB-A	
	ℓ_2 (Red) : disconnection		G-11
	ℓ_1 (Black) : disconnection		G-12
	ℓ_4 (Orange)-GND : short circuit		D-8
	ℓ_{21} (Black)-C_{21} :short circuit		B-3
	Sw. 30 : contact failure		
	ℓ_4 (Orange) : disconnection		B-3
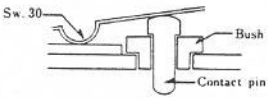	ℓ_5 (Green) & ℓ_{18} (White) : reversed		E-9
	ℓ_5 (Green)-GND : short circuit		E-9
	Operating-button contact & ℓ_2 : short circuit		G-11
	R_{27} : soldering failure : defect : short circuit		O-10
	Q_5 : soldering failure : defect : short circuit		O-9
	Battery contact : deformation : stain		
	Release base plate (GND printed wire) : disconnection	Replace release base plate (0424)	
	VDD0 -release base plate-flex PCB-A : contact failure		
	C_3 : short circuit		K-4
	C_5 : short circuit		R-8
	C_{37} : short circuit		K-4
	Q_{16} : short circuit		K-4
	XL_1 : soldering failure : defect		I-4
	R_{33} : short circuit		K-4
	C_{38} : short circuit		K-4
	R_{26} : short circuit		O-9
	IC_1 ③, ④, ㉕ : soldering failure		
	IC_1 ③-④, ④-⑤, ㉕-㉖, ㉕-㉗, ㉗-㉘, ㊳-㊴ : short circuit		
	IC_4 ②, ③, ④, ⑤, ㉙ : soldering failure		
	IC_6 ② : soldering failure		
	IC_6 ㉑-㉒, ㉑-㉓ : short circuit		
	Flex PCB-A & -E (Vcc-132) : short circuit		
	Three layers (A_{11}, A_{12}) : contact failure		
	Cartridge contact pin (4265) : Adhesion of Alteco inside the bush (Fig)		
	Connector pressure plate set (0429) : rubber off		
	IC_1, IC_4 : defect	Replace flex PCB-A (0401)	
	IC_6 : defect	Replace flex PCB-B (0402)	

(2) Shutter releases by attaching battery holder (With Sw. M OFF)

Checking item	Causes	Servicing measures	Part position
	IC_4 ⑤–⑥, ⑥–⑦, ⑲–⑳ : short circuit		
	IC_4 : defect	Replace flex PCB-A (0401)	

(3) Shutter releases by attaching battery holder (With Sw. M ON)

Checking item	Causes	Servicing measures	Part position
	Sw. 2 : short circuit		
	C_{20} : short circuit		I - 4

■ Trouble symptoms with Sw. 1 ON

(1) Shutter releases by Sw. 1 ON

Checking item	Causes	Servicing measures	Part position
	Sw. 1–Sw. 2 : short circuit		
	IC_1 ㉙–㉚ : short circuit		
	IC_1 : defect	Replace flex PCB-A (0401)	

■ Trouble symptoms with Sw. 2 ON

(1) No shutter releasing. (no aperture ring operation)

Checking item	Causes	Servicing measures	Part position
① With normal display	DC/DC converter PCB : defect		
	IC_1 ㉜–㉝ : short circuit		
	IC_4 ⑯ : soldering failure		
	IC_1, IC_4 : defect	Replace flex PCB-A (0401)	
	Flex PCB-F : disconnection (VDD0)	Replace flex PCB-F (4226)	
	Aperture charge lever (0255) : riveting failure of roller	Replace aperture charge lever (0255)	
	Shutter screw (9611-2040-01) : looseness		
	Mirror-up sub-lever axis : riveting failure (Fig)	Replace mirror operation plate set (0513)	
	Return trigger lever spring (2557) : off position		
② With no display (Camera not powered at all)	IC_1 ㉙ : soldering failure		
	XL_1 : short circuit		I - 4
	C_3 : short circuit		K - 4
	IC_6 : defect	Replace flex PCB-B (0402)	
	IC_1 : defect	Replace flex PCB-A (0401)	

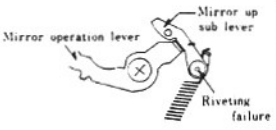

(2) No shutter releasing with normal aperture ring operation

Checking item	Causes	Servicing measures	Part position
	SL_3 : disconnection		
	IC_1 ⑭ : soldering failure		
	IC_4 ⑥, ⑲ : soldering failure		
	Flex PCB-F : contact failure (SL_3)		
	Mirror-up sub-lever spring : breakage	Replace mirror operation plate set (0513)	
	Flat spring for mirror up lever : grease shortage (Fig)		
	IC_1, IC_4 : defect	Replace flex PCB-A (0401)	

(3) Shutter releases normally first : no 2nd shutter releasing

Checking item	Causes	Servicing measures	Part position
① LCDs disappear after releasing	ℓ_8 (Red)-ℓ_{10} (Black) : short circuit		C-8
② LCDs remain ON after releasing	Sw. 4 : soldering failure		
	IC_1 ②, ⑬ : soldering failure		
	IC_1 : defect	Replace flex PCB-A (0401)	

(4) No-slit shutter. (Shutter runs normally but no-slit shutter)

Checking item	Causes	Servicing measures	Part position
① Self-timer LED and illumination LED light ON normally	SL_5 : disconnection		
	IC_1 ⑪ : soldering failure		
	ℓ_5 (Red) : disconnection		C-8
	ℓ_6 (Yellow) : disconnection		A-8
	ℓ_6 (Yellow)-ℓ_7 (White) : short circuit		A-8
	ℓ_6 (Yellow)-ℓ_7 (White) : short circuit ; reversed		A-8
	Shutter magnet : E-ring off	Replace shutter set (0202)	
	IC_1 : defect	Replace flex PCB-A (0401)	
② No illumination LED lighting	IC_1 ⑩ : soldering failure		
	IC_4 ㉙ : soldering failure		
	IC_1, IC_4 : defect	Replace flex PCB-A (0401)	
③ Illumination LED blinks with self-timer operation	IC_1 ⑨ − ⑩ : short circuit		
	IC_4 ㉙ − ㉚ : short circuit		
	IC_1, IC_4 : defect	Replace flex PCB-A (0401)	
④ No illumination LED lighting with self-timer operation	IC_1 ⑨ : soldering failure		
	IC_4 ㉚ : soldering failure		
	IC_1, IC_4 : defect	Replace flex PCB-A (0401)	
⑤ No-slit shutter with mirror up by pressing preview button	IC_1 ㊼ − ㊽ : short circuit		
	IC_1 : defect	Replace flex PCB-A (0401)	

(5) Noticeable time-lag from Sw. 2 ON to releasing

Checking item	Causes	Servicing measures	Part position
	Sw. 2 : contact failure		

(6) 2nd shutter not travel

Checking item	Causes	Servicing measures	Part position
	ℓ_7 (White)-GND : short circuit		A-8

■Other releasing failure

(1) No shutter releasing with remote cord

Checking item	Causes	Servicing measures	Part position
	IC_1 ㊸-A_{44} : disconnection	Replace flex PCB-A (0401)	
	Remote control contact : contact failure		

(2) Shutter releases by opening back cover

Checking item	Causes	Servicing measures	Part position
	Sw. CNT 1 : contact failure		
	Sw. CNT 2 : contact failure		

(3) Shutter releases by winding simultaneously

Checking item	Causes	Servicing measures	Part position
① Trouble occurs without batteries ……mechanical cause ; no-slit shutter 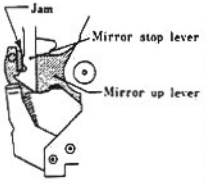	SL_3 : magnetic failure		
	Mirror-up lever : jams on mirror-stop lever (Fig)		
	SL_3 : bond on magnetic surface		
② Trouble occurs only at inserting batteries……electrical cause ; normal shutter operation	C_{20}-GND : short circuit		I-4
	SL_3 (White) : disconnection		E-13
	Sw. 2-GND : short circuit		

(4) Shutter releases by pressing AEL button

Checking item	Causes	Servicing measures	Part position
	IC_1 ㊹–㊺ : short circuit		
	IC_1 : defect	Replace flex PCB-A (0401)	

2. Mirror operation failure

(1) Mirror stays up and no more winding occurs……See p. 59

Checking item	Causes	Servicing measures	Part position
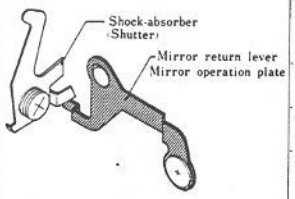	1st & 2nd shutter blades : piled up	Replace shutter set (0202)	
	2nd shutter blade shock-absorber & mirror return lever : off position (Fig)		
	Mirror-up sub-lever axis : riveting failure	Replace mirror operation plate set (0513)	
	2nd shutter stop : hard to disengage	Replace shutter set (0202)	
	Sub-mirror : operation failure	Replace mirror box assembly (0116)	

(2) Mirror stays half-way up

Checking item	Causes	Servicing measures	Part position
	Mirror holder : arm off		

(3) No mirror operation
(Same symptom occurs with no shutter releasing)

Checking item	Causes	Servicing measures	Part position
	Mirror-up sub-lever spring : off position	Replace mirror operation plate set (0513)	
	Mirror : hard to disengage	Replace mirror operation plate set (0513)	
	Mirror-up sub-lever & mirror stop lever : not engaged securely	Replace mirror operation plate set (0513)	

(4) With operating-button held down, mirror moves up before winding completion

Checking item	Causes	Servicing measures	Part position
	Sw. 4 lever : riveting failure	Replace winding gear base plate set (0324)	

(5) Mirror moves half-way up by pressing operating button before winding completion

Checking item	Causes	Servicing measures	Part position
	Winding stop release lever (0348) : deformation	Replace winding stop release lever set (0348)	

(6) Mirror not return to its position when releasing with camera's penta-prism side down

Checking item	Causes	Servicing measures	Part position
	Mirror-down spring : off position	Replace mirror operation plate set (0513)	

3. Film transport failure

■Winding failure

(1) No winding

Checking item	Causes	Servicing measures	Part position
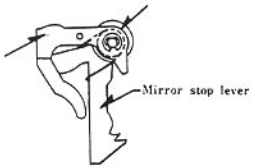	Mirror charge lever (0390): deformation	Replace mirror charge lever set (0390)	
	Winding stop release spring (3049): off position		
	Mirror-stop lever: spring off (Fig)		
	Mirror charge spring (3091): off position		

(2) Any number of winding (cocking) is possible without shutter releasing

Checking item	Causes	Servicing measures	Part position
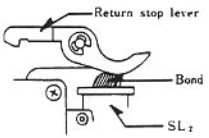	Return stop lever (0246): adhesion of bond (Fig)		
	Return stop lever spring (2464): off position		
	One-way cam (3017): returning failure		
	Charge spring (3105): off position		
	Charge plate set (0306): riveting failure	Replace charge plate set (0306)	
	Screw (9004): looseness		

(3) After multiple exposure, the setting is not canceled

Checking item	Causes	Servicing measures	Part position
	Muiltiple-exposure lever set (0374): deformation	Replace multiple-exposure lever set (0374)	
	Sprocket idle gear set (0313): riveting failure	Replace sprocket idle gear set (0313)	
	Film reverse running stopper: adjusting failure		

(4) No multiple exposure

Checking item	Causes	Servicing measures	Part position
	Reversing prevention lever-B: jams on sprocket idle gear set (0313)		
	Multiple-exposure lever (0374): breakage	Replace multiple-exposure lever set (0374)	
	Multiple-exposure spring (3077) breakage	Replace multiple-exposure spring (3077)	

(5) Multiple-exposure button not return

Checking item	Causes	Servicing measures	Part position
	Top cover: mis-installing		
	Counter return spring (3402): catching		
	Spacer (3050): breakage	Replace spacer (3050)	

(6) Irregular winding sound

Checking item	Causes	Servicing measures	Part position
	Springs (3010, 3136) : resonance	Replace springs (3010, 3136)	

(7) Mirror moves up slightly by several short strokes

Checking item	Causes	Servicing measures	Part position
	Mirror box set : defect	Replace mirror box assembly (0116)	

(8) Film advance lever not return

Checking item	Causes	Servicing measures	Part position
	Winding lever pressure (1344) : B-10 (Screw Lock) off position		

(9) Irregular sound at end of stroke

Checking item	Causes	Servicing measures	Part position
	Rubber (3119) : off position		

■Rewinding failure

(1) Irregular rewinding sound

Checking item	Causes	Servicing measures	Part position
	Flex PCB-G : contact w/ rewinding gears		
	Rewinding gears : contact w/ isolation sheet (5011)		

(2) Rewind-release not return

Checking item	Causes	Servicing measures	Part position
	Rewind button holder set (0311) : deformation	Replace rewind button holder set (0311)	

4. Display failure only

■ Trouble symptoms at attaching battery holder (With Sw. M OFF)

(1) Stand-by display ON

Sw. M, 0, 1 OFF

Checking item	Causes	Servicing measures	Part position
	Sw. M-GND : short circuit		

(2) "ISO 100" blinks before frame "1"

Sw. M, 0, 1 OFF

Checking item	Causes	Servicing measures	Part position
	Sw. CNT 1 : contact failure		
	IC_1 ㉝ : soldering failure		
	IC_1 : defect	Replace flex PCB-A (0401)	

(3) All LCDs ON

Sw. M, 0, 1 OFF

Checking item	Causes	Servicing measures	Part position
	IC_2 ㊽–㊾ : short circuit		
	R_4 : short circuit		Q-7
	IC_2 ㉛ : soldering failure		
	IC_2 : defect	Replace flex PCB-B (0402)	
	IC_1 : defect	Replace flex PCB-A (0401)	

(4) Illumination LED lights ON

Checking item	Causes	Servicing measures	Part position
	IC_4 ⑫–⑬ : short circuit		
	IC_4 : defect	Replace flex PCB-A (0401)	

■ Trouble symptoms with Sw. M ON

(1) Initial load display appears by Sw. M ON

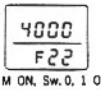

Sw. M ON, Sw. 0, 1 OFF

Checking item	Causes	Servicing measures	Part position
	Sw. 0-GND : short circuit		
	Sw. 1-GND : short circuit		
	Sw. AEL-GND : short circuit		
	Sw. 31-GND : short circuit		
	Sw. 32-GND : short circuit		
	R_1-GND : short circuit		K-5

(2) All LCDs OFF by Sw. M ON

Sw. M ON, Sw. 0, 1 OFF

Checking item	Causes	Servicing measures	Part position
	XL_2 : soldering failure		K-7
	IC_1 ㊷, ㊺, ㊸ : soldering failure		
	IC_3 ①-②, ②-③, ⑯-⑰, ⑰-⑱, ㉑-㉒, ㉒-㉓, ㉓-㉔, ㉔-㉕, ㉕-㉖, ㉖-㉗, ㉗-㉘, ㉙-㉚, ㉚-㉛, ㉛-㉜, ㉝-㉞, ㉞-㉟, ㉟-㊱, ㊱-㊲, ㊲-㊳, ㊳-㊴, ㊴-㊵, ㊵-㊶, ㊸-㊹, ㊹-㊺, ㊺-㊻, ㊻-㊼, ㊸-㊽ : short circuit		
	IC_3 ②, ③, ⑤, ⑥, ⑦, ⑱, ㊾, ㊿ : soldering failure		
	IC_2 ㉚-㉛ : short circuit		
	C_3 : short circuit		K-4
	C_{10} : short circuit		K-5
	C_{16} : short circuit		K-5
	C_{17} : short circuit		K-4
	R_8 : short circuit		P-8
	C_9 : short circuit		K-5
	C_{11} : short circuit		K-7
	C_{12} : short circuit		K-7
	R_{26} : soldering failure		O-9
	Three layers (A_{19}) : contact failure		
	IC_1, IC_3 : defect	Replace flex PCB-A (0401)	
	IC_2 : defect	Replace flex PCB-B (0402)	

■ Trouble symptoms with Sw. 0, 1 ON

(1) With frame number before "1"

① Stand-by display appears

Sw. M, 0, 1 ON

Checking item	Causes	Servicing measures	Part position
	Sw. 0 : contact failure		
	IC_1 ⑫, ㉓, ㉕, ㉜, ㊸ : soldering failure		
	IC_1 ⑧-⑨ : short circuit		
	R_2 : short circuit		I-5
	C_4 : short circuit		I-6
	IC_1 : defect	Replace flex PCB-A (0401)	

② Initial load display blinks dimly

4000 F22 (Dim)

Sw. M, 0, 1 ON

Checking item	Causes	Servicing measures	Part position
	IC_3 ㊾-㊿ : short circuit		
	IC_3 : defect	Replace flex PCB-B (0402)	

③ All LCDs OFF with Sw. 0 ON

Sw. M, 0 ON

Checking item	Causes	Servicing measures	Part position
	R_1 : shot circuit		K-5
	IC_3 ㊶-㊷, ㊺-㊻ : short circuit		
	Flex PCB-D : defect	Replace flex PCB-D (0422)	
	IC_3 : defect	Replace flex PCB-A (0401)	

(2) With frame number "1" or after

① No illumination LEDs ON

Checking item	Causes	Servicing measures	Part position
	ℓ_{11} (Red)-ℓ_{12} (Yellow) : short circuit		D-6
	LED PCB printed wire : short circuit		

② Illumination LEDs and self-timer LED light ON simultaneously

Checking item	Causes	Servicing measures	Part position
	IC_4 ⑬-⑭ : short circuit		
	IC_4 : defect	Replace flex PCB-A (0401)	

■Other display failures

(1) All displays OFF in finder only

Sw. M, 0, 1 ON

No display

Checking item	Causes	Servicing measures	Part position
	In-finder mirror-A, -B (5813, 5814) : off position		
	In-finder set : defect	Replace in-finder set (0581)	

(2) Some segments OFF in LCD

① Same segments OFF on body and in finder LCDs

Sw. M, 0, 1 ON

Checking item	Causes	Servicing measures	Part position
	IC_3 pins : contact failure		
	IC_3 : defect	Replace flex PCB-A (0401)	

■ A/D converting reference voltage adjusting (1152mV)

■Measuring instrument : Digital multimeter 〈Type 2508, 3476, 2507〉

■Adjusting procedure

1. Solder measuring lead wires (× 2) as shown below.

■Fig. 1

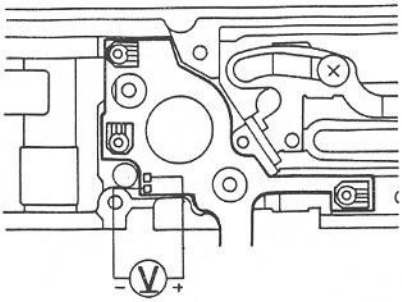

2. With main switch and touch switch (metering switch) turned ON, adjust by turning VR_1 (after flare shield plate removed) so that voltage is in 1152±5mV.
   ※ : Allowable range varies depending on surrounding temperature as below :

Temperature (°C)	20±2.5	25±2.5	30±2.5
Allowable range (mV)	1133±5	1152±5	1171±5

■Fig. 2

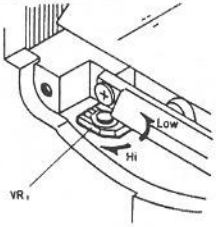

3. Unsolder measuring lead wires, and remove solder.

※ : VR_1 adjusting is not possible without flare shield plate removed. Before adjusting, remove flare shield plate following procedure below :

1) Complete winding, set aperture at minimum (Complete initial loading).
2) Remove 9611-1620-09 (×2) (Fig. 3)
3) Move mirror up slightly and remove flare shield plate.
4) Bend flare shield plate as shown.
5) Apply B on flare shield plate, and install it in body.
6) Secure flare shield plate by tightening 9611-1620-09 (×2).

■Fig. 3

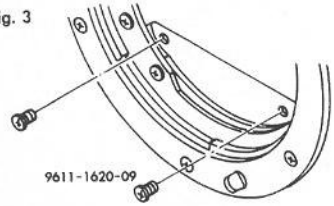

■Fig. 4

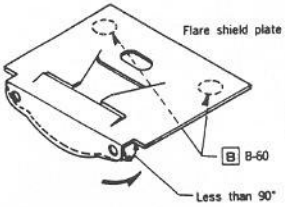

(9) All LCDs dimly ON

Checking item	Causes	Servicing measures	Part position
	IC_3 ㊹–㊺ : short circuit		
	IC_3 : defect	Replace flex PCB-A (0401)	

(10) No "F" display

Checking item	Causes	Servicing measures	Part position
	IC_3 ㉒ : soldering failure		
	IC_3 : defect	Replace flex PCB-A (0401)	

(11) All LCDs not disappear by Sw. M OFF
(disappears 10 sec after)

Checking item	Causes	Servicing measures	Part position
	IC_3 ⑤–⑥ : short circuit		
	IC_3 : defect	Replace flex PCB-A (0401)	

(12) Metered values disappear at once by Sw. 0, 1
OFF (without 10 sec holding)

Checking item	Causes	Servicing measures	Part position
	IC_1 ㉑–㉒ : short circuit		
	IC_1 : defect	Replace flex PCB-A (0401)	

(13) Metered values not disappear regardless of 10 sec
display-holding after Sw. 0, 1 OFF

Checking item	Causes	Servicing measures	Part position
	IC_1 ㊸ : soldering failure		
	IC_1 ㊹–㊺ : short circuit		
	R_2 : soldering failure		1 - 5
	IC_1 : defect	Replace flex PCB-A (0401)	

(14) " ⚡ " LED blinks by attaching battery holder

Checking item	Causes	Servicing measures	Part position
	IC_3 ④–⑤ : short circuit		
	IC_4 ㉒–㉓ : short circuit		
	IC_3, IC_4 : defect	Replace flex PCB-A (0401)	

(15) Some segments are darker than others

Checking item	Causes	Servicing measures	Part position
	IC_2 ①: soldering failure		
	C_9 : soldering failue		
	C_{26} : soldering failure		
	IC_3 : defect	Replace flex PCB-A (0401)	

(16) Focus indication LED failure

Checking item	Causes	Servicing measures	Part position
① ▷ glow simultaneously	ℓ_{16} (White)-ℓ_{17} (Blue) : short circuit		E-4
	IC_6 ㉙-㉚ : short circuit		
	IC_6 : defect	Replace flex PCB-B (0402)	
② ◁ glow simuttaneously	ℓ_{15} (Purple)-ℓ_{16} (White) : short circuit		E-4
	IC_6 ㉘-㉛ : short circuit		
	IC_6 : defect	Replace flex PCB-B (0402)	
③ not glow	ℓ_{16} (White) : soldering failure		E-4
	IC_6 ㉚: soldering failure		
	R_{14} : soldering failure		Q-10
	LED PCB : defect	Replace in-finder set (0581)	
	IC_6 : defect	Replace flex PCB-B (0402)	
④ ▷ not glow	ℓ_{17} (Blue) : disconnection ; soldering failure		E-4
	IC_6 ㉙: soldering failure		
	R_{13} : soldering failure		P-9
	LED PCB : defect	Replace in-finder set (0581)	
	IC_6 : defect	Replace flex PCB-B (0402)	
⑤ ◁ not glow	ℓ_{15} (Purple) : disconnection ; soldering failure		E-4
	IC_6 ㉛: soldering failure		
	R_{12} : soldering failure		P-9
	LED PCB : defect	Replace in-finder set (0581)	
	IC_6 : defect	Replace flex PCB-B (0402)	
⑥ ◁ glows with in-focus subject	ℓ_{16} (White)-ℓ_{17} (Blue) : reversed		E-4
⑦ ▷ and ◁ glow simultaneously	ℓ_{14} (Green)-ℓ_{15} (Purple) : short circuit		D-5
⑧ ▷ and ◁ glow reversely	ℓ_{15} (Purple)-ℓ_{17} (Blue) : reversed		E-4
⑨ ▷ ◁ glow simultaneously	IC_6 : defect	Replace flex PCB-B (0402)	
⑩ ▷ remains glowing	IC_6 ㉛: current leakage		
	IC_6 : defect	Replace flex PCB-B (0402)	
⑪ ▷ ◁ not glow at all	R_{46} : soldering failure		Q-8
	Three layers (A_{37}) : contact failure		

5. Exposure failure

■ Underexposure

(1) Underexposure by several stops (difference from minimum aperture) with "F – –"

① "F" blinks

Checking item	Causes	Servicing measures	Part position
	Sw. PV_2-GND : short circuit		
	IC_4 ⑧–⑨, ⑳–㉑ : short circuit		
	IC_4 : defect	Replace flex PCB-A (0401)	

② Shutter speed changes corresponding to luminance change

Checking item	Causes	Servicing measures	Part position
	IC_1 ⑬ : soldering failure		
	IC_1 ⑫–⑬ : short circuit		
	R_{26} : soldering failure		O-9
	R_{38} : soldering failure		J-4
	R_{38} : short circuit		J-4
	Lens signal contact (L_1, L_2, L_3, L_4) : contact failure		
	Flex PCB-A & -E : soldering failure (L_1 ~ L_5)		
	Flex PCB-E : defect (R_{20}, R_{21}, R_{22} : soldering failure)		
	IC_1 : defect	Replace flex PCB-A (0401)	

③ "⚡" blinks

Checking item	Causes	Servicing measures	Part position
	IC_1 ㉜–㉝, ㉝–㉞ : short circuit		
	IC_3 ㉚–㉛, ㉛–㉜ : short circuit		
	IC_4 ㉒–㉓, ㉓–㉔, ㉞–㉟, ㉟–㊱ : short circuit		
	R_{23} : short circuit		J-5
	Flex PCB-A & -E : soldering failure (L_1–L_2 short circuit)		
	IC_1, IC_3, IC_4 : defect	Replace flex PCB-A (0401)	

④ "F – –" appears by winding

Checking item	Causes	Servicing measures	Part position
	SL_1 : magnetic failure	Clean SL_1 or replace aperture control set (0253)	

⑤ Other cases with "F – –"

Checking item	Causes	Servicing measures	Part position
	IC_4 ㊶, ㊸ : soldering failure		
	IC_2 ⑮, ⑫ : soldering failure		
	IC_2 ③ – ④, ⑤ – ⑥, ⑥ – ⑦ : short circuit		
	IC_4 : defect	Replace flex PCB-A (0401)	
	IC_2 : defect	Replace flex PCB-B (0402)	

(2) Always minimum aperture with normal display

1. Minimum aperture regardless of setting

Checking item	Causes	Servicing measures	Part position
	SL_2 White -GND : short circuit		E-11

2. Minimum aperture at other setting then maximum (Normal AE at max setting)

Checking item	Causes	Servicing measures	Part position
	IC_1 ㊲ – ㊳, ㊳ – ㊴, ㊸ – ㊹ : short circuit		
	IC_1 ㊸, ㊼ : soldering failure		
	IC_4 9 – ⑩, ⑮ – ⑯, ㉘ – ㉙, ㉗ – ㉘, ㉚ – ㉛, ㉛ – ㉜ : short circuit		
	IC_4 5, 9, ⑩, ㉗ : soldering failure		
	C_{14} : soldering failure ; short circuit		J-7
	Flex PCB-A & -F : contact failure (409, 410, GND)		
	IC_1, IC_4 : defect	Replace flex PCB-A (0401)	

(3) Underexposure regardless of out of range (over) display with 1 /4000 sec & f:22

Checking item	Causes	Servicing measures	Part position
	IC_1 ㉘-㉙, ㉙-㉚: short circuit		
	IC_3 ④-⑤: short circuit		
	IC_4 ㊱-㊲, ㊼-㊽, ㊽-㊾: short circuit		
	IC_4 ㊼: soldering failure		
	IC_2 ④-⑤, ⑳-㉑, ㉓-㉔, ㉕-㉖, ㊵-㊶: short circuit		
	C_4: short circuit		Q-6
	VR_1: soldering failure		P-3
	VR_2: soldering failure		O-2
	R_4: soldering failure		Q-3
	Three layers (A_{14}): contact failure		
	IC_1, IC_3, IC_4: defect	Replace flex PCB·A (0401)	
	IC_2: defect	Replace flex PCB·B (0402)	

(4) Fastest shutter speed & min aperture setting (1/4000 sec & f:22) after frame "1"……initial load setting not released

Checking item	Causes	Servicing measures	Part position
	Sw. CNT 1-GND: short circuit		
	Sw. CNT 2-GND: short circuit		
	IC_1 ㉘-㉙: short circuit		
	IC_1: defect	Replace flex PCB·A (0401)	

(5) Sometimes initial load setting (1/4000 sec & f:22) appears

Checking item	Causes	Servicing measures	Part position
	Counter base plate set (0343): defect	Replace counter base plate set (0343).	

(6) 1 or 2 stops smaller aperture than displayed aperture

Checking item	Causes	Servicing measures	Part position
	C_{14}: short circuit		J-7
	Flex PCB·F: stain; disconnection	Clean/Replace flex PCB·F (4226)	
	Aperture ring: off position		

(7) 1/3000 & f:22 stays on

Checking item	Causes	Servicing measures	Part position
	R_3: short circuit		Q-5

■Overexposure

(1) Overexposure regardless of out of range (under) display with 30 sec & f : 1.7

Sw. M. 0, 1 ON

Checking item	Causes	Servicing measures	Part position
	IC_1 ㉛–㉜ : short circuit		
	IC_1 ㉙, ㉚ : short circuit		
	IC_3 ㉛–㉜, ㉜–㉝ : short circuit		
	IC_4 ㊱–㊲ : short circuit		
	IC_4 ㊳, ㊴ : soldering failure		
	IC_6 ㉒–㉓ : short circuit		
	IC_2 ⑤, ㊲, ㊶ : soldering failure		
	R_3 : soldering failure		Q-5
	R_7 : soldering failure		Q-4
	R_4 : short circuit		Q-3
	R_7 : short circuit		Q-4
	SPC : soldering failure		
	IC_1, IC_3, IC_4 : defect	Replace flex PCB-A (0401)	
	IC_2, IC_6 : defect	Replace flex PCB-B (0402)	

(2) Always maximum aperture with normal display

Checking item	Causes	Servicing measures	Part position
1. With SL_1's operation sound preset magnet moves but aperture ring OR, preview operation does not work aperture not stop down. "F" blinks though.	SL_2 lead wire White : soldering failure		E-11
	IC_1 ⑦ : soldering failure		
	IC_4 17, ⑨ : soldering failure		
	Flex PCB-A & -F : contact failure (415)		
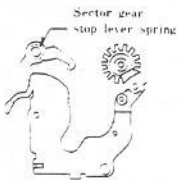	SL_2 : defect	Replace aperture control set (0253)	
	Aperture ring : off position	Repair guide p. 17	
	Sector gear stop lever spring : off position Fig		
	IC_1, IC_4 : defect	Replace flex PCB-A (0401)	
2. No SL_1's operation (no "F" blinks with preview operation)	IC_3 ㊸ : soldering failure		
	IC_4 ⑧, ㉑ : soldering failure		
	Flex PCB-A & -F : soldering failure (421)		
	Transmit axis set (0241) : riveting failure	Replace transmit axis set (0241)	
	Sector gear set (0231) : operation failure	Replace sector gear set (0231)	
	Trigger lever : riveting failure	Replace aperture control set (0253)	
	Aperture stop gear set (0247) : defect	Replace aperture stop gear set (0247)	
	Preset magnet lever spring : off position		
	Preset magnet lever : E-ring off		
	IC_1, IC_4 : defect	Replace flex PCB-A (0401)	

(3) Aperture ring stops at larger aperture side than "F" setting

Checking item	Causes	Servicing measures	Part position
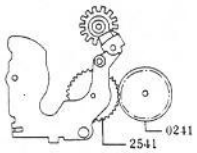	Transmit axis set (0241) & first gear (2541) : off position (Fig)	Repaire guide p. 16	
	C_{21} : soldering failure		J - 7
	C_{13} : soldering failure		J - 7

(4) Maximum aperture with low battery power

Checking item	Causes	Servicing measures	Part position
	SL_2 magnetic failure	Clean SL_2 or replace aperture control set (0253)	

(5) 2nd shutter not travel

Checking item	Causes	Servicing measures	Part position
	ℓ_7 (White)-GND : short circuit		A - 8

(6) Shutter speed tends to be slower at high speed setting

Checking item	Causes	Servicing measures	Part position
	2nd shutter blade : gear worn out	Replace shutter set (0202)	

(7) Shutter speed is slower than setting at slow setting with AE

Checking item	Causes	Servicing measures	Part position
	A/D converting reference voltage (1152mV) : adjusting failure	Repaire guide p. 31	

(8) Overexposure at other than max (full-opening) setting

Checking item	Causes	Servicing measures	Part position
	Aperture blade (on lens) : operation failure	Repair the lens	

■Other exposure failure

(1) Unstable metered value

Checking item	Causes	Servicing measures	Part posit
	IC_3 ⑲−⑳, ㊺−㊻ short circuit		
	IC_4 ⑳−㉑, ㉗−㉘, ㊲−㊳ : short circuit		
	IC_4 ㊱ : soldering failure		
	IC_2 ㉗−㉙ : short circuit		
	IC_2 ⑬, ⑱ : soldering failure		
	SPC Ⓚ, Ⓐ : soldering failure		
	IC_3, IC_4 : defect	Replace flex PCB-A (0401)	
	IC_2 : defect	Replace flex PCB-B (0402)	

(2) Shutter speed and aperture stay at 1/250 and f : 5. 6

Checking item	Causes	Servicing measures	Part posit
	SPC : short circuit		
	IC_2 ⑰−⑱ : short circuit		
	IC_2 : defect	Replace flex PCB-B (0402)	

(3) Shutter speed and aperture stay at 1/500 and f : 11

Checking item	Causes	Servicing measures	Part positi
	Q_{15} Ⓢ − Ⓖ : short circuit		P-

(4) At 1/4000 setting, metered-value display on shutter tester continuously changes

Checking item	Causes	Servicing measures	Part positi
	C_{42} : mis-installing		L-1

(5) Aperture becomes smaller 1 stop by winding

Checking item	Causes	Servicing measures	Part positi
	Sector gear stop lever set (0223) : riveting failure	Replace sector gear stop lever set (0223)	

6. AF/Manual focusing failure

(Focus indication LED failure only……See "4. display failure only)……p. 33

■ AF operation failure (Normal operation in manual focus mode)

(1) Lens not move at all in AF mode

Checking item	Causes	Servicing measures	Part position
	Motor lead wire (Orange/Red, Green) : disconnection ; soldering failure		
	ℓ_{24} (Gray)-GND : short circuit		B-12
	IC_1 ㉓-㉔ : short circuit		
	IC_6 ⑫-⑬, ⑲-⑳, ㉟-㊱ : short circuit		
	IC_9 ④, ⑤, ⑥, ⑦ : soldering failure		
	IC_9 : reversed		
	D_2 : short circuit		R-9
	Motor : defect	Replace AF drive set (0260)	
	IC_1 : defect	Replace flex PCB-A (0401)	
	$IC_{6,9}$: defect	Replace flex PCB-B (0402)	

(2) Lens not move from near side to infinity

Checking item	Causes	Servicing measures	Part position
	Q_2 : short circuit		R-7
	Q_3 : short circuit		R-9
	Q_1 : soldering failure		R-8
	Q_4 : soldering failure		R-8
	R_{18} : soldering failure		
	IC_6 ⑬ : soldering failure		
	IC_9 ④, ⑨, ⑩, ⑫ : soldering failure		
	$IC_{6,9}$: defect	Replace flex PCB-B (0402)	

(3) Lens not move from infinity to near side

Checking item	Causes	Servicing measures	Part position
	Q_1 : short circuit		R-8
	Q_4 : short circuit		R-8
	Q_2 : soldering failure		R-7
	Q_3 : soldering failure		R-9
	R_{19} : soldering failure		R-7
	IC_6 ⑬ : soldering failure		
	IC_9 ⑥, ⑦, ⑪ : soldering failure		
	$IC_{6,9}$: defect	Replace flex PCB-B (0402)	

(4) AF lens moves irregularly near in-focus point or whenever Sw. 0 ON.

Checking item	Causes	Servicing measures	Part position
	C_{13} : short circuit		J - 7
	IC_4 ③-④, ㉓-㉔, ㉔-㉕: short circuit		
	IC_4 ㉓, ㉕ : soldering failure		
	IC_6 ⑲-⑳, ⑳-㉑ : short circuit		
	IC_6 ④, ⑳ : soldering failure		
	Flex PCB-A & -G : soldering failure		
	PI -2 & flex PCB-G : soldering failure		
	IC_4 : defect	Replace flex PCB-A (0401)	
	IC_6 : defect	Replace flex PCB-B (0402)	

(5) AF motor continues running at near side or infinity end

Checking item	Causes	Servicing measures	Part position
	IC_4 ④-⑤, ⑩-⑪, ⑪-⑫, ⑫-⑬ : short circuit		
	Flex PCB-A & -G : short circuit (411-412)		
	IC_4 : defect	Replace flex PCB-A (0401)	

(6) Shutter is releasable with in-focus subject only

Checking item	Causes	Servicing measures	Part position
	IC_1 ㊱-㊲ : short circuit		
	IC_1 : defect	Replace flex PCB-A (0401)	

(7) Lens moves to reverse direction of focus signal

Checking item	Causes	Servicing measures	Part position
	Motor lead wire : mis-wiring		G - 5

(8) AF operates without touching operating-button

Checking item	Causes	Servicing measures	Part position
	Sw. 0-GND : short circuit		

(9) Focus is not held by Sw. 1 ON

Checking item	Causes	Servicing measures	Part position
	Sw. 1 : contact failure		
	Flex PCB-A & release base plate : contact failure (157)		
	IC_1 ㊲ soldering failure		
	IC_1 : defect	Replace flex PCB-A (0401)	

■AF and manual focusing failure

Note : Low contrast scanning : Lens moves at a swoop to ∞ or minimum distance side

(1) Always "▷ ◁" LEDs blink.
(Low contrast scanning in AF mode)

Checking item	Causes	Servicing measures	Part position
	DC/DC converter PCB (Vcc2 printed wire) : soldering failure		
	IC_4, IC_7, IC_8 : defect	Replace flex PCB-B (0402)	
	AF sensor filter : stain	Clean	
	Sub-mirror, mirror : stain ; dust	Clean	

(2) No focusing, all LEDs "▷◯◁" not glow
(No AF motor running)

Checking item	Causes	Servicing measures	Part position
	IC_1 : defect	Replace flex PCB-A (0401)	
	IC_4 : defect	Replace flex PCB-B (0402)	

■Operation failure in manual focus mode

(1) AF motor runs idle at manual focus mode setting

Checking item	Causes	Servicing measures	Part position
	Sw. AF/M : contact failure		
	ℓ_{14} (Gray) : soldering failure		B-12
	IC_1 ㉔ : soldering failure		
	IC_6 ㉕–㉖, ㊴–㊵ : short circuit		
	IC_1 : defect	Replace flex PCB-A (0401)	
	IC_6 : defect	Replace flex PCB-B (0402)	

■Other AF operation failure

(1) Irregular sound during AF operation

Checking item	Causes	Servicing measures	Part position
	Motor : defect	Replace AF drive set (0260)	

(2) By attaching battery holder, AF motor runs

Checking item	Causes	Servicing measures	Part position
	R_{51}-GND : short circuit		P-4
	IC_6 ⑭–⑮ : short circuit		
	IC_6 : defect	Replace flex PCB-B (0402)	

7. Operation failure about self-timer, piezo buzzer, film speed, preview, exposure-mode changeover, metering-mode changeover, key switch changeover

■ Self-timer operation failure

(1) Shutter releases immediately without 10 sec delay

Checking item	Causes	Servicing measures	Part position
	Sw. SLF : contact failure		
	IC_1 ㊷ : soldering failure		
	IC_1 : defect	Replace flex PCB-A (0401)	

(2) Shutter releases always with 10 sec delay (when Sw. 2 ON)

Checking item	Causes	Servicing measures	Part position
	Sw. SLF : short circuit		
	IC_1 ㊷ – ㊸ : short circuit		
	IC_1 : defect	Replace flex PCB-A (0401)	

(3) Self-timer LED not blink at self-timer setting

Checking item	Causes	Servicing measures	Part position
	LD_1 (9353-2642-02) : defect		
	IC_4 ⑬ : soldering failure		
	IC_4 : defect	Replace flex PCB-A (0401)	

(4) Self-timer LED always ON

Checking item	Causes	Servicing measures	Part position
	LD_1-GND : short circuit		

(5) Illumination LED blinks synchronizing with self-timer clock

Checking item	Causes	Servicing measures	Part position
	IC_4 ⑬ – ⑭ : short circuit		
	IC_4 : defect	Replace flex PCB-A (0401)	

(6) "F" blinks by Sw. SLF ON/OFF

Checking item	Causes	Servicing measures	Part position
	IC_1 ㊶ – ㊷ : short circuit		
	IC_1 : defect	Replace flex PCB-A (0401)	

■Piezo buzzer operation failure

(1) No beeping

Checking item	Causes	Servicing measures	Part position
	Sw. Bz : contact failure		
	Bz lead wire (Red/Black) : soldering failure		B-10
	IC_1 ㊴ : soldering failure		
	R_{34} : soldering failure		I - 4
	Piezo buzzer set (0430) : defect		
	IC_1 : defect	Replace flex PCB-A (0401)	

(2) No beeping with subject in focus

Checking item	Causes	Servicing measures	Part position
	IC_1 ㊿ : soldering failure		
	Three layers (A_{31}) : contact failure		
	IC_4 ⑱ : soldering failure		
	IC_4 ⑯–⑰, ⑰–⑱ : short circuit		
	IC_1 : defect	Replace flex PCB-A (0401)	
	IC_4 : defect	Replace flex PCB-B (0402)	

(3) Beeping by attaching battery holder

Checking item	Causes	Servicing measures	Part position
	IC_1 ㊴–㊿ : short circuit		
	IC_4 ⑱–⑲ : short circuit		
	IC_1 : defect	Replace flex PCB-A (0401)	
	IC_4 : defect	Replace flex PCB-B (0402)	

(4) Beeping at main switch ON position

Checking item	Causes	Servicing measures	Part position
	Sw. M : short circuit		

(5) Loud beeping

Checking item	Causes	Servicing measures	Part position
	R_{34} : soldering failure		I - 4

(6) Low beeping

Checking item	Causes	Servicing measures	Part position
	Piezo buzzer set (0430) : defect		

■Film speed setting failure (Mis-decoding of DX code)

(1) DX codes not decoded

Checking item	Causes	Servicing measures	Part position
	Sw. CNT 2 : contact failure		
	CAS 1 : contact failure		
	IC_1 ⑥ : soldering failure		
	IC_3 ㊿ : soldering failure		

(2) Mis-decoding of DX code

(For ISO 5000, scratch cartridge to make all CAS contacts 1 -6 conductive)

① 5000 → 320

Checking item	Causes	Servicing measures	Part position
	CAS 4 : contact failure		
	Three layers (A_4) : contact failure		
	IC_1 ⑨ : soldering failure		

② 5000 → 3200

Checking item	Causes	Servicing measures	Part position
	CAS 6 : contact failure		
	Three layers (A_2) : contact failure		
	IC_3 ⑦ : soldering failure		

③ 5000 → 2500

Checking item	Causes	Servicing measures	Part position
	CAS 2 : contact failure		
	Three layers (A_6) : contact failure		
	IC_3 ⑪ : soldering failure		

③ 5000 → 1250

Checking item	Causes	Servicing measures	Part position
	CAS 3 : contact failure		
	Three layers (A_5) : contact failure		
	IC_3 ⑩ : soldering failure		

③ 5000 → 4000

Checking item	Causes	Servicing measures	Part position
	CAS 5 : contact failure		
	Three layers (A_3) : contact failure		
	IC_3 ⑧ : soldering failure		

⑥ 100 → 1600

Checking item	Causes	Servicing measures	Part position
	CAS 3 – 4, 4 – 5 : short circuit		
	IC_1 8 – 9, 9 – ⑩ : short circuit		

⑦ 100 → 200

Checking item	Causes	Servicing measures	Part position
	CAS 2 – 3 : short circuit		
	IC_1 ⑩–⑪ : short circuit		

⑧ 100 → 160

Checking item	Causes	Servicing measures	Part position
	CAS 5 – 6, 6 – GND : short circuit		
	IC_1 ⑥–⑦, ⑦–⑧ : short circuit		

(3) "ISO 100" blinking not stop

Checking item	Causes	Servicing measures	Part position
	Sw. 31 : contact failure		

■ Preview operation failure

(1) Aperture ring not stop down

Checking item	Causes	Servicing measures	Part position
	Sw. PV_1 : contact failure		
	ℓ_{36} (Brown) : soldering failure		E-11
	IC_1 ⑬, ㉑ : soldering failure		
	Sw. PV_1 spring : off position		
	IC_1 ㉙–㉚ : short circuit		
	Flex PCB-A & -F : contact failure (115)		
	IC_1 : defect	Replace flex PCB-A (0401)	

(2) Aperture ring not return to full-opening

Checking item	Causes	Servicing measures	Part position
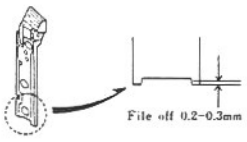 Attach hand grip set to body, positioning it to upside	Preview switch button set (0149) : insufficient stroke (Fig)		
	Stop gear lever (2551) : Adhesion of Alteco		
	Mirror box : defect		
	Mirror box set & PV base plate set : no clearance		

(3) Aperture ring not stop at desired setting
(Always stops at minimum aperture)

Checking item	Causes	Servicing measures	Part position
	Flex PCB-A & -F : contact failure		
	Preset magnet lever : E-ring missing		

(4) "ISO 100" blinks during preview operation

Checking item	Causes	Servicing measures	Part position
	IC_1 : defect	Replace flex PCB-A (0401)	

(5) "F" blinking stops by releasing finger from PV switch

Checking item	Causes	Servicing measures	Part position
	Sw. PV_2 : contact failure		

(6) No "F" blinking during preview operation

Checking item	Causes	Servicing measures	Part position
	IC_1 ㉛ : soldering failure		
	Flex PCB-A & -F : contact failure (151)		
	IC_1 : defect	Replace flex PCB-A (0401)	

■ Exposure mode changeover failure

(1) Manual set mark disappear in M mode

Checking item	Causes	Servicing measures	Part position
	IC_3 ⑭ – ⑮ : short circuit		
	IC_3 : defect	Replace flex PCB-A (0401)	

(2) In A mode, exposure control & display function as if in P mode

Checking item	Causes	Servicing measures	Part position
	Sw. MD_3 : contact failure		
	Flex PCB-A & -C : contact failure		
	IC_1 ⑲ : soldering failure		
	IC_1 : defect	Replace flex PCB-A (0401)	

(3) In S mode, exposure control & display function as if in P mode

Checking item	Causes	Servicing measures	Part position
	Sw. MD_1 : contact failure		
	Flex PCB-A & -C : contact failure		
	IC_1 ㉚ : soldering failure		
	IC_1 : defect	Replace flex PCB-A (0401)	

(4) In M mode, "F – –" appears

Checking item	Causes	Servicing measures	Part position
	IC_1 ㉚ – ㉛ : short circuit		
	IC_1 : defect	Replace flex PCB-A (0401)	

(5) In S mode, exposure control & display function as if in M mode

Checking item	Causes	Servicing measures	Part position
	Sw. MD_6 : short circuit		

(6) In A mode, exposure control & display function as if in M mode

Checking item	Causes	Servicing measures	Part position
	Sw. MD_1 : short circuit		

(7) In S and A modes, exposure control & disply function as if in M mode

Checking item	Causes	Servicing measures	Part position
	IC_1 ㊾-㊿ : short circuit		
	IC_1 : defect	Replace flex PCB-A (0401)	

■ Metering mode changeover failure

(1) Average metering functions always

Checking item	Causes	Servicing measures	Part position
	IC_3 ⑲ : soldering failure		
	IC_2 ㉙ : soldering failure		
	Q_{15} : soldering failure		P-4
	IC_2 : defect	Replace flex PCB-B (0402)	
	IC_3 : defect	Replace flex PCB-A (0401)	

(2) Spot metering functions in average setting

Checking item	Causes	Servicing measures	Part position
	Sw. Sh : shot circuit		
	Sw. Hi : short circuit		
	IC_3 ⑬-⑭ : short circuit		
	IC_3 : defect	Replace flex PCB-A (0401	

(3) In spot (midtone) setting, highlight readings function (Exposure is increased by pressing AEL button)

Checking item	Causes	Servicing measures	Part position
	IC_3 ⑫-⑬ : short circuit		
	IC_3 : defect	Replace flex PCB-A (0401)	

(4) In spot (midtone) setting, shadow readings function (Exposure is decreased by pressing AEL button)

Checking item	Causes	Servicing measures	Part position
	Sw. Hi : contact failure		
	IC_3 ⑬ : soldering failure		
	IC_3 : defect	Replace flex PCB-A (0401)	

(5) Average metering functions in shadow setting, spot (midtone) metering in highlight setting

Checking item	Causes	Servicing measures	Part position
	Sw. Sh : contact failure		
	IC_3 ⑫ : solering failure		
	IC_3 : defect	Replace flex PCB-A (0401)	

(6) All LCDs disappear in spot setting

Checking item	Causes	Servicing measures	Part position
	IC_3 ⑱–⑲ : short circuit		
	IC_3 : defect	Replace flex PCB-A (0401)	

(7) 1/4000 blinks with A mode in spot setting

Checking item	Causes	Servicing measures	Part position
	VR_{11} : soldering failure		N-2
	IC_2 ⑦–⑧ : short circuit		
	IC_2 : defect	Replace flex PCB-B (0402)	

■Key switch changeover failure

(1) Key switch (+/−, ISO, UP or DOWN) not work

Checking item	Causes	Servicing measures	Part position
+/− key not work	Sw. 32 : contact failure		
	IC_1 ⑮ : soldering failure		
	IC_1 : defect	Replace flex PCB-A (0401)	
ISO key not work	Sw. 31 : contact failure		
	IC_1 ⑯ : soldering failure		
	IC_1 : defect	Replace flex PCB-A (0401)	
F stop-up key Sw. not work	Sw. 35 : contact failure		
	IC_1 ㉑ : soldering failure		
	IC_1 : defect	Replace flex PCB-A (0401)	
F stop-down key Sw. not work	Sw. 36 : contact failure		
	IC_1 ⑳ : soldering failure		
	IC_1 : defect	Replace flex PCB-A (0401)	
Shutter speed up key Sw. not work	Sw. 38 : contact failure		
	Flex PCB-A & -C : contact failure (119)		
	IC_1 ⑲ : soldering failure		
	IC_1 : defect	Replace flex PCB-A (0401)	
Shutter speed down key Sw. not work	Sw. 37 : contact failure		
	Flex PCB-A & -C : contact failure (118)		
	IC_1 ⑱ : soldering failure		
	IC_1 : defect	Replace flex PCB-A (0401)	

(2) Other changeover failure

① Program line shifts upward by F stop up/down key down

Checking item	Causes	Servicing measures	Part position
	IC_1 ⑳–㉑ : short circuit		
	IC_1 : defect	Replace flex PCB-A (0401)	

② In M mode, shutter speed becomes faster by F stop up/down key up

Checking item	Causes	Servicing measures	Part position
	IC_1 ⑲–⑳ : short circuit		
	IC_1 : defect	Replace flex PCB-A (0401)	

③ Program line shifts upward by shutter speed up/down key down

Checking item	Causes	Servicing measures	Part position
	IC_1 ⑱–⑲ : short circuit		
	IC_1 : defect	Replace flex PCB-A (0401)	

④ ISO display appears by pressing +/− key

Checking item	Causes	Servicing measures	Part position
	IC_1 ⑯–⑰ : short circuit		
	IC_1 : defect	Replace flex PCB-A (0401)	

⑤ Exposure decreases in half-stop whenever pressing +/− key ON

Checking item	Causes	Servicing measures	Part position
	IC_1 ⑰–⑱ : short circuit		
	IC_1 : defect	Replace flex PCB-A (0401)	

8. Operation failure using accessories

■Operation failure with exclusive flash

(1) Data display failure with fully charged flash (normal flash-firing)

① Flash ready LED " ⚡ " not blink

Checking item	Causes	Servicing measures	Part position
	ℓ_{13} (Orange) : disconnection		D-5
	ℓ_{14} (Green) : disconnection		D-5
	ℓ_{11} (Red)-ℓ_{12} (Yellow) : short circuit		D-6
	IC_3 ④ : soldering failure		
	In-finder set (0581) : defect		
	IC_3 : defect	Replace flex PCB-A (0401)	

② All LCDs dimly ON

Checking item	Causes	Servicing measures	Part position
	IC_3 ③−④ : short circuit		
	IC_3 : defect	Replace flex PCB-A (0401)	

③ " ⚡ " remains ON with Sw. 2 ON

Checking item	Causes	Servicing measures	Part position
	IC_3 ㉜ : soldering failure		
	IC_3 : defect	Replace flex PCB-A (0401)	

(2) Firing failure with fully charged flash

(Flash ready LED " ⚡ " blinks)

① No firing

Checking item	Causes	Servicing measures	Part position
No firing in any way	Sw. X : contact failure		
	Sw. Y : contact failure		
	ℓ_{10} (Purple) : disconnection		D-6
	ℓ_{20} (Purple) : disconnection		B-5
	ℓ_{21} (Black) : disconnection		B-3
	Top-cover screw (9125) : looseness		
	F_1 terminal : contact failure		
No firing with sync terminal used	ℓ_{22} (Purple) : disconnection		A-2
	ℓ_{23} (Black) : disconnection		A-3
	Sync terminal : defect		
No firing with CG-1000 used	ℓ_{19} (Purple) : disconnection		E-6
	Flex PCB-D : defect	Replace flex PCB-D (0422)	

② Always full-firing

Checking item	Causes	Servicing measures	Part position
Flash-ready LED "⚡" OFF by Sw. 0/1 ON (NO)	F_3 terminal : contact failure		
	Three layers (A_{43}) : contact failure		
	IC_2 ㉝, ㉞, ㉟, ㊴ : soldering failure		
	IC_2 ㊱–㊲ : short circuit		
	IC_4 ㉒, ㉔, ㊷, ㊸, ㊹, ㊻ : soldering failure		
	IC_2 : defect	Replace flex PCB-B (0402)	
	IC_4 : defect	Replace flex PCB-A (0401)	
YES	IC_2 ㉕–㉖ : short circuit		
	IC_2 : defect	Replace flex PCB-B (0402)	

③ Always brief-firing

Checking item	Causes	Servicing measures	Part position
	R_9 : soldering failure		Q-3
	C_8, C_9 : soldering failure		Q-3, K-5
	IC_2 ㉝–㉞, ㊱–㊲ : short circuit		
	IC_4 ㊷–㊹ : short circuit		
	IC_2 : defect	Replace flex PCB-B (0402)	
	IC_4 : defect	Replace flex PCB-A (0401)	

(3) Flash fires by attaching to camera
(No "⚡" blinking)

Checking item	Causes	Servicing measures	Part position
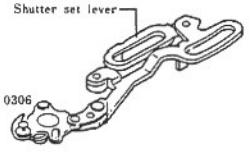	Sw. X : short circuit		
	Shutter lead (Green) : short circuit		D-7
	ℓ_9 (Black), ℓ_{10} (Purple) : short circuit ; reversed		D-5
	ℓ_{20} (Purple), ℓ_{21} (Black) : short circuit ; reversed		B-5
	Sync terminal : short circuit		
	Shutter set lever (on 0306) : touch w/ X contact (Fig)		

(4) Not changed to flash mode

Checking item	Causes	Servicing measures	Part position
	F_2 terminal : contact failure		
	Flex PCB-A & -C : contact failure (A_{42})		
	W_8 : contact failure		
	IC_2 ㉞–㉟, ㊲–㊳ : short circuit		
	IC_4 ㉓ : soldering failure		
	IC_2 : defect	Replace flex PCB-B (0402)	
	IC_4 : defect	Replace flex PCB-A (0401)	

(5) AF illuminator not fire

Checking item	Causes	Servicing measures	Part position
	F_2 terminal : contact failure		
	F_4 terminal : contact failure ; short circuit		
	IC_6 ㊴ : soldering failure		
	IC_6 : defect	Replace flex PCB-B (0402)	

(6) When flash is connected to sync terminal, electrical shock is given at accessory shoe

Checking item	Causes	Servicing measures	Part position
	Sw. Y : short circuit		
	Pin (1061) : operation failure		
	Acc. shoe spring (1352) : deformation		

■Operation failure using MD-90

(1) No winding

Checking item	Causes	Servicing measures	Part position
	Sw. 4 : short circuit		
	Three layers (A_7) : contact failure		
	W_4 : contact failure		
	W_3-W_4 : short circuit		
	IC_1 ② : soldering failure		
	IC_1 : defect	Replace flex PCB-A (0401)	

(2) No rewinding

Checking item	Causes	Servicing measures	Part position
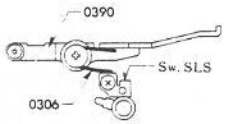	Sw. SLS : short circuit		
	ℓ_3 (Black)-ℓ_{18} (White) : reversed		E - 9
	Mirror charge sprig (3091) : touch w/ Sw. SLS contact		
	W_5-GND : short circuit		

(3) Rewinding not stop at rewinding completion

Checking item	Causes	Servicing measures	Part position
	Sw. SLS : contact failure		
	ℓ_{18} (White) : disconnection		E - 9
	W_5 : contact failure		
	Three layers (B_1) : contact failure		
	Film detect pin (3114) : operation failure		
	Sw. SLS : missing of isolation sheet		

(4) Focus-priority not work in F.P mode

Checking item	Causes	Servicing measures	Part position
	W_6 : contact failure		
	IC_1 ①, ㉟ : soldering failure		
	IC_1 ①–②, ㉟–㊱, ㉟–㊲ : short circuit		
	IC_1 : defect	Replace flex PCB-A (0401)	

(5) No metering by touching second shutter release button

Checking item	Causes	Servicing measures	Part position
	W_1 : contact failure		

(6) Continuous winding in S (single-frame advance) mode

Checking item	Causes	Servicing measures	Part position
	W_2 : contact failure		
	If the problem depends on the way of depressing of operating button, see p. 62		

■Operation failure using Program Back

(1) No imprinting with frame "1" or after

Checking item	Causes	Servicing measures	Part position
	D_2 : contact failure		
	Sw. CNT 1 : short circuit		
	Three layers (A_{10}) : contact failure		
	IC_1 ⑩ : soldering failure		
	IC_1 ⑩–⑪ : short circuit		
	IC_1 : defect	Replace flex PCB-A (0401)	

(2) Imprinting occurs during initial loading

Checking item	Causes	Servicing measures	Part position
	Sw. CNT 1 : contact failure		
	Three layers (A_9) : contact failure		

(3) Imprinting occurs by Sw. 0 ON

Checking item	Causes	Servicing measures	Part position
	IC_1 ⑨–⑩ : short circuit		
	IC_1 : defect	Replace flex PCB-A (0401)	

(4) No intervalometer function

Checking item	Causes	Servicing measures	Part position
	D_3, D_4 : contact failure		
	Three layers (A_{44}) : contact failure		

(5) No flash charging during intervalometer

Checking item	Causes	Servicing measures	Part position
	D_1, D_4 : contact failure		
	Three layers (A_{45}) : contact failure		

9. AE lock failure, Sharp battery draining, Light leakage

■AE lock failure

(1) Unlocked

Checking item	Causes	Servicing measures	Part position
	Sw. AEL : contact failure		
	IC_1 ㊾ : soldering failure		
	IC_1 : defect	Replace flex PCB-A (0401)	

(2) No shutter releasing with AEL button ON

Checking item	Causes	Servicing measures	Part position
	IC_1 ㊾ − ㊿ : short circuit		
	IC_1 : defect	Replace flex PCB-A (0401)	

■Battery drains sharply (See p. 66)

(1) Focus LED ON by installing batteries

Checking item	Causes	Servicing measures	Part position
① ◁ ON	ℓ_{15} (Purple)-GND : short circuit		E-4
② ON	ℓ_{16} (White)-GND : short circuit		E-4
③ ▷ ON	ℓ_{17} (Blue)-GND : short circuit		E-4
	IC_6 ㉘ − ㉙ : short circuit		
	IC_6 : defect	Replace flex PCB-B (0402)	

(2) Short circuit for 1 sec. after installing batteries

Checking item	Causes	Servicing measures	Part position
	Release base plate & flex PCB-A : contact failure at (−) printed wire		
	IC_1 ㊹ : soldering failure		
	IC_4 ㉚, ㊹ : contact failure		
	IC_1, IC_4 : defect	Replace flex PCB-A (0401)	

(3) Remains short-circuited

Checking item	Causes	Servicing measures	Part position
Normal w/ ℓ_4 (Orange) unsoldered → YES	ℓ_{11} (Red)-ℓ_{13} (Orange) : short circuit		D-6
	ℓ_4 (Orange)-GND : short circuit		D-8
	IC_2 ㊶-㊷ : short circuit		
	IC_8 ⑦ : soldering failure		
	C_{34} : short circuit		Q-8
	IC_2, IC_8 : defect	Replace flex PCB-B (0402)	
NO ↓ Normal w/ DC/DC converter PCB & flex PCB-B (Vcc2) unsoldered → YES	C_{17} : short circuit		R-4
	C_{35} : short circuit		R-7
	C_{40} : short circuit		R-8
NO ↓ Normal w/ DC/DC converter PCB & flex PCB (Vcc2) unsoldered → YES	DC/DC converter PCB (0450) : short circuit (GND-V_{DD0})		
	DC/DC converter PCB (0450) : defect	Replace DC/DC converter PCB (0450)	
NO ↓ Normal w/ ℓ_2 (Red) unsoldered → YES	ℓ_2 (Red)-GND : short circuit		G-11
NO ↓ Normal w/ 0426 flexible board-F pressure plate set removed → YES	Flex PCB-F (V_{DD0}) & shutter : short circuit		
	Self-timer LED + & release base plate : short circuit		
	Battery contact (+) & Sw. 30 screw (9611-1640-07) : short circuit		
NO →	D_1 & penta. cover (5017) : short circuit		J-7
	R_{10} & penta. cover (5017) : short circuit		I-7
	ℓ_8 (Red)-GND : short circuit		C-8

■Light leakage

Symptoms	Servicing measures
(1) Light leaks through charge coupler & rewind release button. 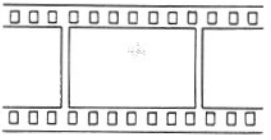	• Attach light shield sponge-B (2071-1404-01). 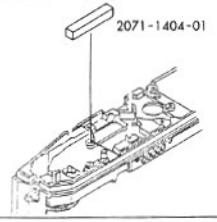
(2) Light leaks through shutter. 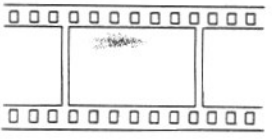	• Attach light shield plate (2071-1403-01). 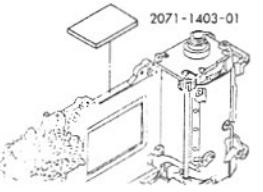 Body is unnecessary to be disassembled down to mirror box. If body is disassembled down to mirror box, attach light shield sponge-A (2071-1401-02) instead. 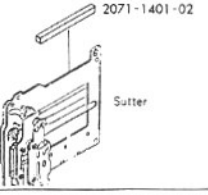
(3) Light leaks through shutter. 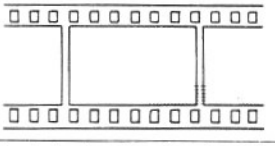	• Light leaks through clearance between 1st & 2nd blades (winding is left on the way.) 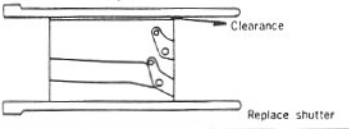
(4) Light leaks through winding base plate. 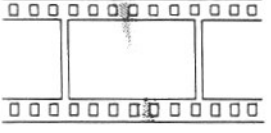	• Place winding-base-plate screw (phillips type, 9612-1635-07) in position.

■ Servicing measures against "mirror stays up"

This trouble may not re-appear if camera is disassembled down to mirror box. Against this trouble, check the following:

Check looseness of mirror-return lever

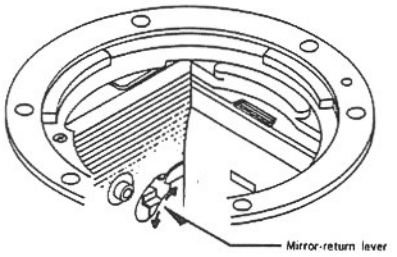

Check looseness by moving the lever in the arrow direction.

Loose → **Shutter defective** → Replace shutter set (0202)

Not loose

Mirror box defective

- Mirror : hard to disengage (Check [1] on p. 60)·····Replace mirror operation plate set (0513).
- 2nd shutter blade shock-absorber & mirror-return lever : off position (Fig. 1) ·····Reform 2nd shutter blade shock-absorber or mirror-return lever.
- Mirror-up sub-lever : looseness ; riveting failure ; axis deformed (Fig. 2) ·····Replace mirror operation plate set (0513).

Aperture control set defective

- Return-stop lever : hard to disengage (Check [2], [3] on p. 60) ·····Replace aperture control set (0253).
- Mirror-return lever : the end disengaged from return-stop lever at Ⓒ in fig. 2. (Mirror returns ; but aperture not return to full-opening, or no winding) ·····Reform mirror-return lever.

■ Fig. 1

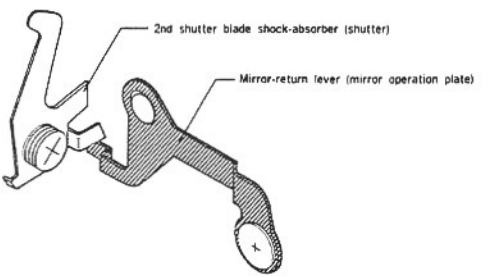

Check 1

With mirror up, press Ⓐ (fig. 2). Disengaging ⓐ of mirror-up sub-lever should require 160g (max). (Check w/ fig. 3 ⓑ disengaged.)

Check 2

With mirror up, press Ⓐ (fig. 2). Disengaging ⓐ, ⓑ (fig. 2, 3) should require 200g (max).

Check 3

With aperture control set itself, press Ⓑ (fig. 3). Disengaging ⓑ should require 100g (max).

■Fig. 2

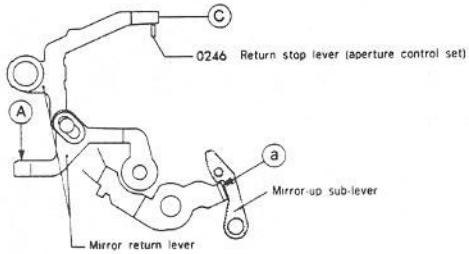

■Fig. 3

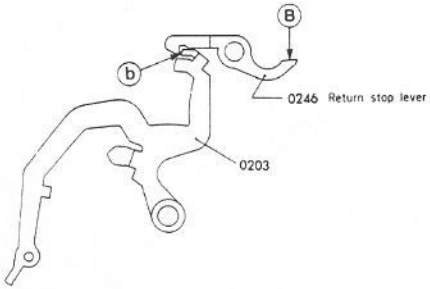

■Precaution for replacing mirror-operation plate set (0513)

1. Before replacing, pre-check the finder-back (with mirror box assembly itself, or body assembled).
   • If not satisfactory, adjust finder-back, following Repair Guide p. 27.
2. Apply G-75 to new 0513 (0513 is supplied w/o greased).
   ……Apply G-75 (w/ the same amount as a sesame seed) on ① to ⑦ shown below.

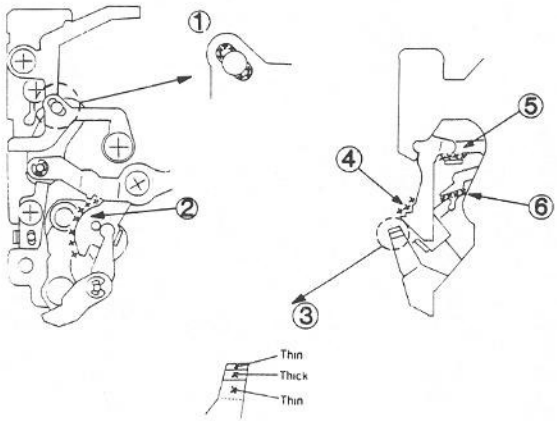

3. After replacing.
   (1) Check the finder-back again.
   If necessary, adjust the finder-back, following Repair Guide p. 27.
   (2) Slide mirror stopper to touch with mirror operation lever.

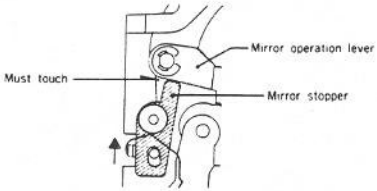

• NEVER loosen the screw adjusting angle of mirror (shown by arrow).

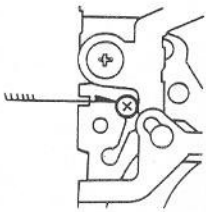

■ Servicing measures against "with motor drive (MD-90), continuous winding (2-3 frames) in single-frame advance mode"

Symptoms

2-3 frames advance in single-frame advance mode, when right side (from photographer) of operating-button is kept down (Sw. 2 ON) with camera held for photographing.

Depending on the way of pressing operating-button, more frames advance.

Cause

When the right side of operating-button is pressed, solder for Sw. 2 sub-contact short-circuits to GND contact (release switch does not turn ON securely). The Sw. 2 turns ON/OFF repeatedly (chattering) by vibration of motor drive or finger, causing continuous winding.

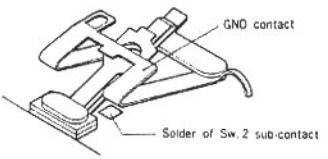

Servicing measures

Bind GND contact with acetate tape (9384-2391-30) cut off.

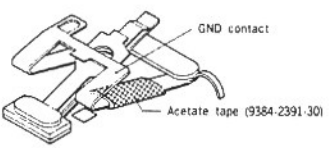

■ Spot-metering area checking/adjusting

1. Checking

(1) Instruments : Tripod
: Light ("pen light" on sale ; or optical bench)

(2) Set the instruments as shown.

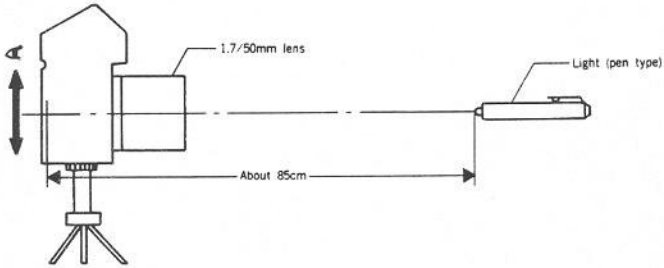

Camera
- A mode
- f/5.6
- SPOT

- Keep out outer light as much as possible.
- Use fresh battery for "pen light".
- Fix "pen light" (e. g. by placing it on desk).
- Align "pen light" with the optical axis of lens.

(3) Center filament of "pen light" in spot-metering circle.

(4) Turn Sw. 0 ON, and write down the shutter speed.

(5) Move the camera up/down 1cm by 1cm* and take step (4).

※Check shutter speeds at 4 points for each (up/down)

(6) Find the highest speed from data in (5), which shows peak of metering sensitivity.

2. Adjusting

(1) Remove flare shield plate (5039), and 2 screws (9611-1620-09) holding SPC set (0531).

(2) To move metering-sensitivity (peak) area, incline SPC set in "A" or "B" direction by turning eccentric screw.

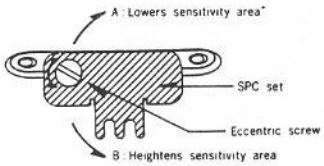

※If necessary, replace SPC set by servicing part (stamped 5I or after) to lower the sensitivity area more.

(3) Repeat adjusting and checking to meet the user's requirement.

■ Servicing measures against "in-finder segments OFF"

1. Unjoin flex PCB-A and LCD_2.

1) Unhook Ⓐ (right and left) of in-finder pressure plate-B (2072-5072). Remove in-finder pressure plate-A (2072-5074). Light shield tape is unnecessary any more.

2) Strip off flex PCB-A in the direction of arrow, holding around Ⓑ of flex PCB-A. (Be careful not to scratch printed wire of flex PCB-A.)

■ Fig. 1

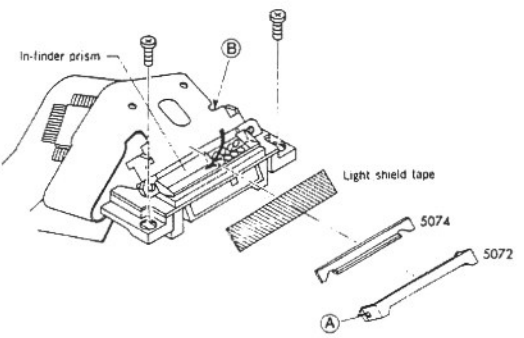

3) Wipe off coating Ⓒ between LCD_2 and flex PCB-A with using Fronsolve. (See fig. 2.)

- Be careful not to scratch printed wire of flex PCB-A.
- Wipe off coating thoroughfully.
- Be careful not to flow Fronsolve in between LCD_2 (2071-4246-01) and in-finder prism (2072-5815-02).

4) Turn in-finder set upside down, and reinforce mirror with B-60 (Bond G-17) or B-30 (Araldite).

■ Fig. 2

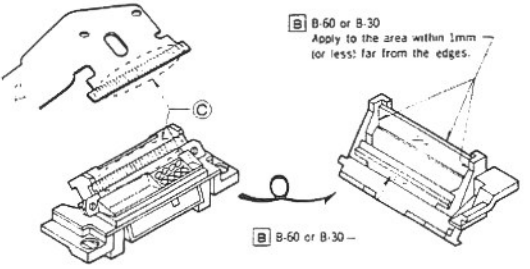

2. Re-join of flex PCB-A and LCD_2

1) Replace in-finder pressure-C 2072-5073-01 by -81. (See fig. 3.)

■ Fig. 3

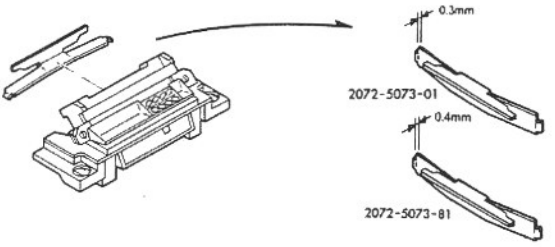

2) Attach in-finder unit to body and tighten screws temporarily.
3) Align printed wire of LCD and flex PCB-A. (See fig. 4.)
Make sure that there is clearance ⓐ between in-finder set and flex PCB-A.
4) Holding flex PCB-A on LCD_2, cover pressure rubber (2072-5082-81). and place in-finder pressure -A (2072-5074), -B (2072-5072). Holding the center of 5072 by finger, align printed wire of LCD and flex PCB-A. Refer to 3).
※Make sure that 5072 has right angle (90°) or is not be deformed. (See fig. 5.)

■Fig. 4

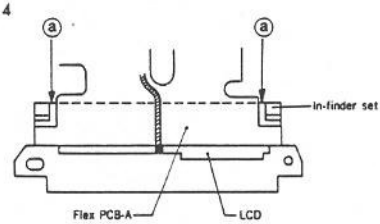

■Fig. 5

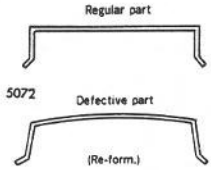

■Fig. 6

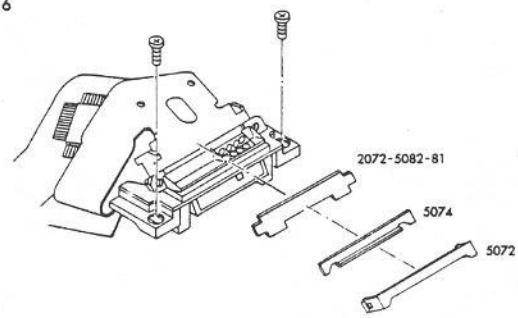

3. Check that LCDs are ON

Install in-finder set onto body. Keeping Sw. 0 ON, connect IC_3 ㊽-㊾ and make sure that all LCDs are ON.* (When all LCDs are ON, AF motor runs, but has no problem.)

■Fig. 7

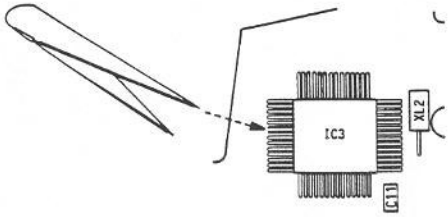

※To keep all LCDs ON, ① Connect IC_3 ㊽-㊾ w/ Sw. 0 ON……all LCDs ON ② Turn Sw. 0 OFF……LCDs keep ON for 10 sec ③ When AF motor stops, disconnect IC_3 ㊽-㊾……all LCDs keep ON further ④ Turn Sw. 0 ON to turn LCDs OFF.

If some segments OFF

- Off position of flex PCB-A……Re-position.
- Breakage of LCD_2……Replace LCD_2 (2071-4246-01)
- Disconnection of flex PCB-A ……Replace flex PCB-A (2071-0401)

■Current leakage checking

■Standard

Sw. M OFF	50μA or less
Sw. M ON, •)))	100μA or less
Sw. M ON, •))) , Sw. 0 ON	250μA or less

■Measuring procedure

Using camera-leak-checker (model CL-1101)

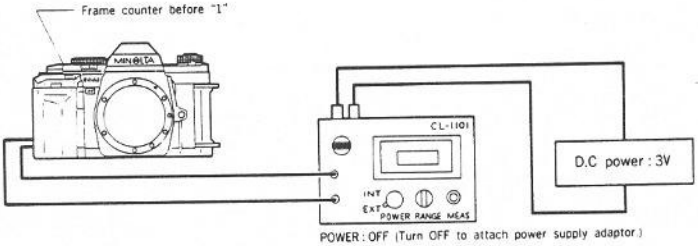

1. When Sw. M is OFF
   (1) Turn camera's main Sw. OFF, and set camera-leak-checker's RANGE to "μA".
   (2) Change the checker's POWER from "OFF" to "EXT".
   (3) Press "MEAS", and read the metered value.
2. When Sw. M is ON
   (1) Turn camera's main Sw. ON, and read the metered value.
   (If "1." appears on the checker's LCD, press "MEAS" to read the value again.)
3. When Sw. M is ON, Sw. 0 ON
   (1) Set camera-leak-checker's RANGE to "mA". Turn camera's Sw. 0 ON, and read the metered value.
   (2) Release the shutter, and read the value when frame counter is "1" or after.

NOTE:

If shutter locks (all LCDs OFF) during the operation, turn the checker's POWER OFF, then re-install power-supply-adapter.

Shutter release locks when "MEAS" is pressed with checker's RANGE in "μA" while metering is activated.

3 Switch and electrical element chacking.

1. Switch

Switch	Checking procedure	Judgment
Sw. 1	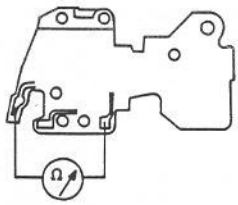	Sw. 1 : Should be ON by depressing slightly.
Sw. 4	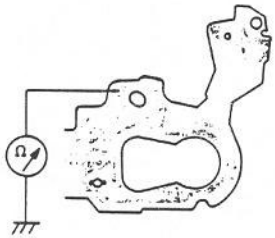	Winding is started : OFF→ON Winding is completed : ON→OFF
Sw. SLS	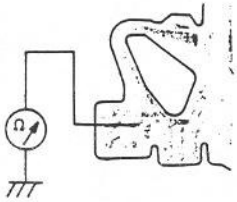	Should be OFF by depressing film detecting pin.
Sw. AF/M	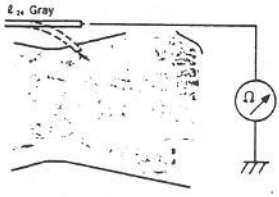	Set Sw. AF/M AF : OFF M : ON
Sw. CNT 1 Sw. CNT 2	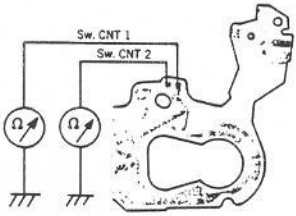	Should be ON until film is wound to "1". Should be OFF on and after "1".

Switch	Checking procedure	Judgment
Sw. PV 1	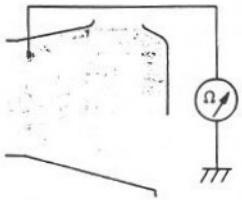	Should be ON by sliding PV lever. Should be OFF by releasing PV lever.
Sw. X	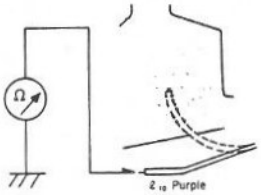	Release shutter in "bulb" setting. Should be ON when 1st shutter blade has run completely. Should be OFF when 2nd shutter blade has run completely.

2. Encoder

	Solder lead wire for measuring and connect it with DC power supply. 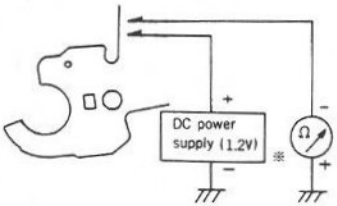	Turn AF coupler slowly with finger: Pointer of circuit tester should move.

※ : DO NOT SET DC-POWER-SUPPLY AT VOLTAGE MORE THAN 1.2V ; otherwise LED will be damaged.

3. DC/DC converter

	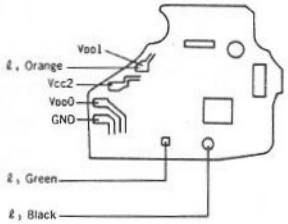	Check voltage between printed wires shown in the figure and GND. (Sw. 1 ON) Vcc 2 — 13V VDD 0 — 3V VDD 1 — 5V

4. Transistor

$Q_{3,4}$

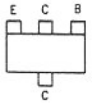

Q_5

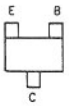

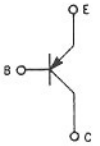

(PNP)

Check conductivity between the terminals of B, C, E.

Terminals	B − C	B − C	B − E	B − E
Polarity of circuit tester	− +	+ −	+ −	− +
Pointer of circuit tester	Should not move	Should move	Should move	Should not move

$Q_{1,2}$

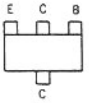

Q_{16}

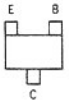

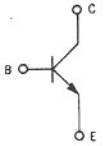

(NPN)

Check conductivity between the terminals of B, C, E.

Terminals	B − C	B − C	B − E	B − E
Polarity of circuit tester	− −	− −	+ −	− +
Pointer of circuit tester	Should move	Should not move	Should not move	Should move

5 Function of switches

(1) Position of switches

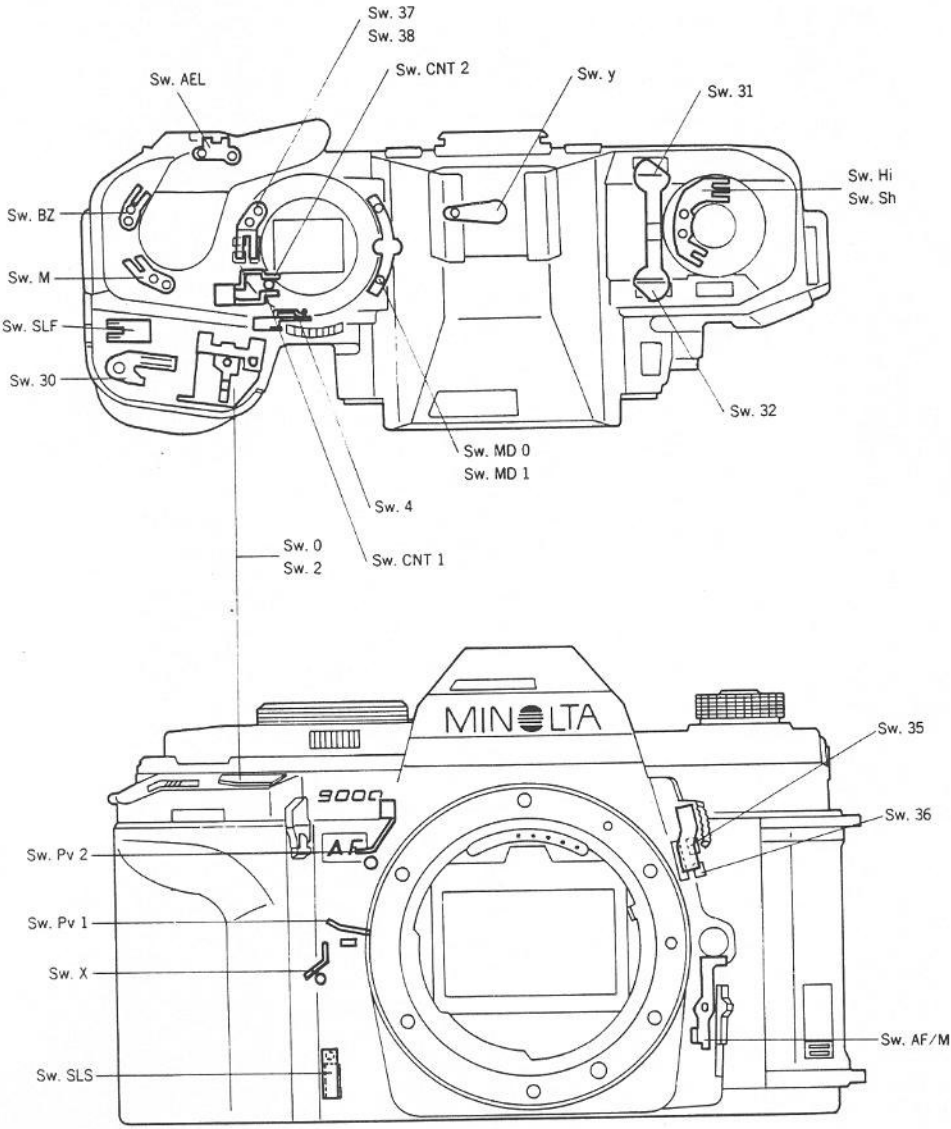

(2) Switches list

Mark	Name	Condition of operation
Sw. 0	Touch switch	ON by touching operating button Remains ON for 10 sec before shutter release
Sw. 1	Metering switch	ON by depressing operating button one step
Sw. 2	Release switch	ON by depressing operating button all the way
Sw. 4	Windingcompletion switch	OFF→ON with completion of shutter releasing ON→OFF with completion of winding
Sw. M	Main switch	By sliding main switch
Sw. Bz	Buzzer switch	By sliding main switch
Sw. SLS	Film detecting switch	OFF by pushing film detecting pin With film loaded OFF With no film loaded ON
Sw. AEL	AE lock switch	ON by depressing AE lock button
Sw. AF/M	Focus mode switch	By sliding focus mode switch ON in M mode, OFF in AF mode
Sw. SLF	Self-timer switch	By sliding self-timer switch
Sw. X	Sync switch	ON with completion of 1st shutter blade traveling OFF with completion of 2nd shutter blade traveling
Sw. Y	Electric-shock prevention switch	ON by attaching, flash, OFF by removing flash
Sw. MD 0 Sw. MD 1	Exposure mode switch	By setting exposure mode selector

	P	A	M	S
Sw.MD 0	H	L	L	H
Sw.MD 1	H	H	L	L

Mark	Name	Condition of operation
Sw. Hi Sw. Sh	Metering mode switch	By setting metering selector

	AVERAGE	SPOT	H	S
Sw. Hi	H	L	L	H
Sw. Sh	H	H	L	L

Mark	Name	Condition of operation
Sw. CNT 1	Counter switch 1	Interlocked with counter operation lever
Sw. CNT 2	Counter switch 2	Interlocked with counter operation lever
Sw. Pv 1	Preview switch 1	OFF→ON by pressing preview button ON→OFF by releasing preview button
Sw. Pv 2	Preview switch 2	OFF→ON by SL_2 OFF
Sw. 30	Battery switch	ON→OFF by attaching battery holder
Sw. 31	ISO key switch	Indication, corresponding to the key in use, is displayed by the key ON, and continues for 10 sec after the key OFF
Sw. 32	+/− key switch	
Sw. 35	F stop-up key lever	• In P, A, S modes With up lever pressed: shutter speed faster, aperture (lens opening) larger. With down lever pressed: shutter speed slower, aperture (lens opening) smaller. • When the lever is held down, value changes rapidly. Each time the lever is pressed, the value changes by one stop.
Sw. 36	F stop-down lever	
Sw. 37	Shutter speed down lever	
Sw. 38	Shutter speed up lever	

9000 (2071-200) α 9000 (2071-400) MAXXUM 9000 (2071-600)

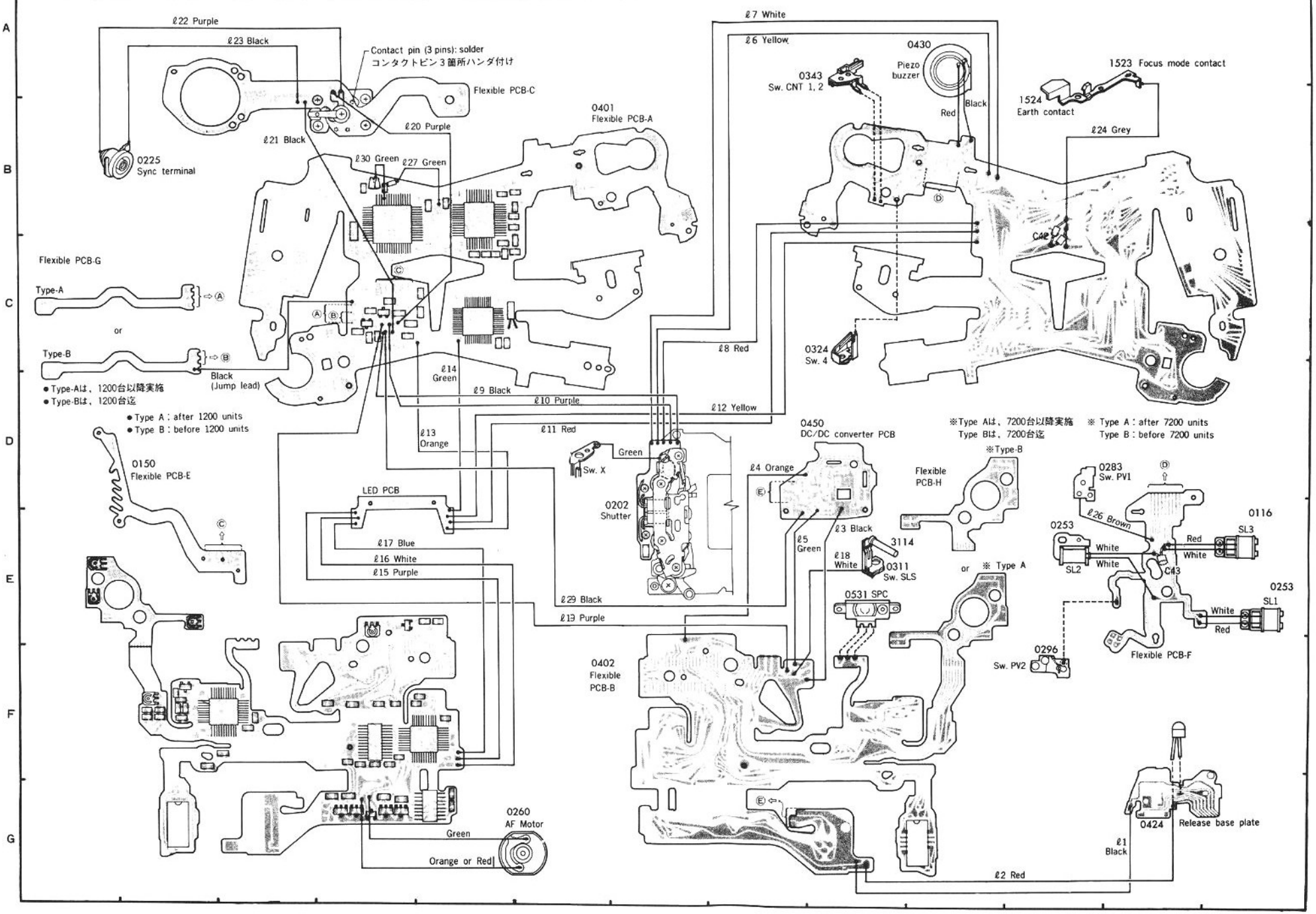

■Flexible PC board-A

A number of three figures on printed wiring shows number of IC and IC terminal.
(ex.) 1 5 1 ·····Terminal ⑤① of IC₁
Terminal No.
IC No.

各パターン上の3桁の数字はICの端子番号を示しています。
(例) 1 5 1 ·····IC₁の51番端子
端子No.
IC No.

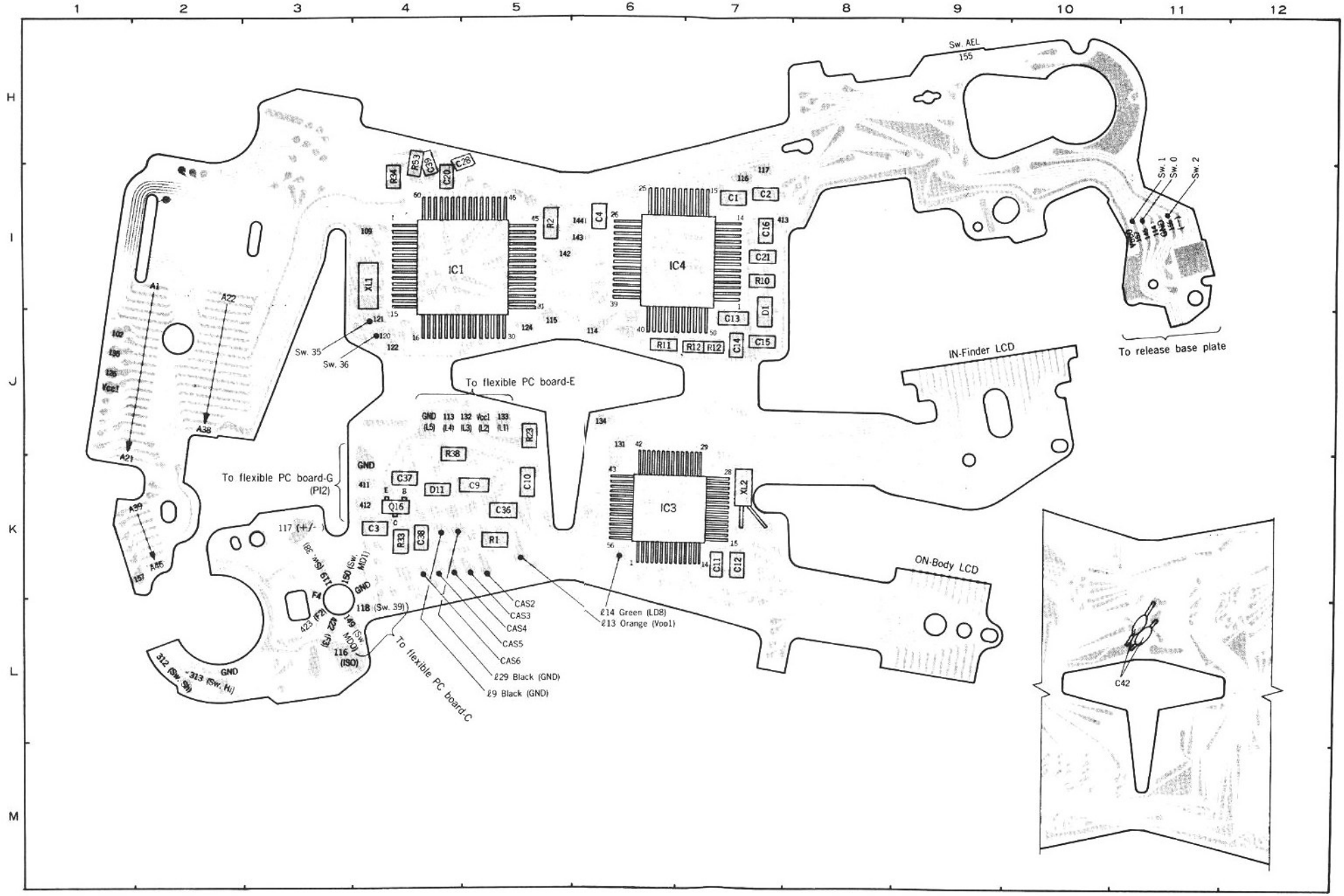

■Flexible PC board-A

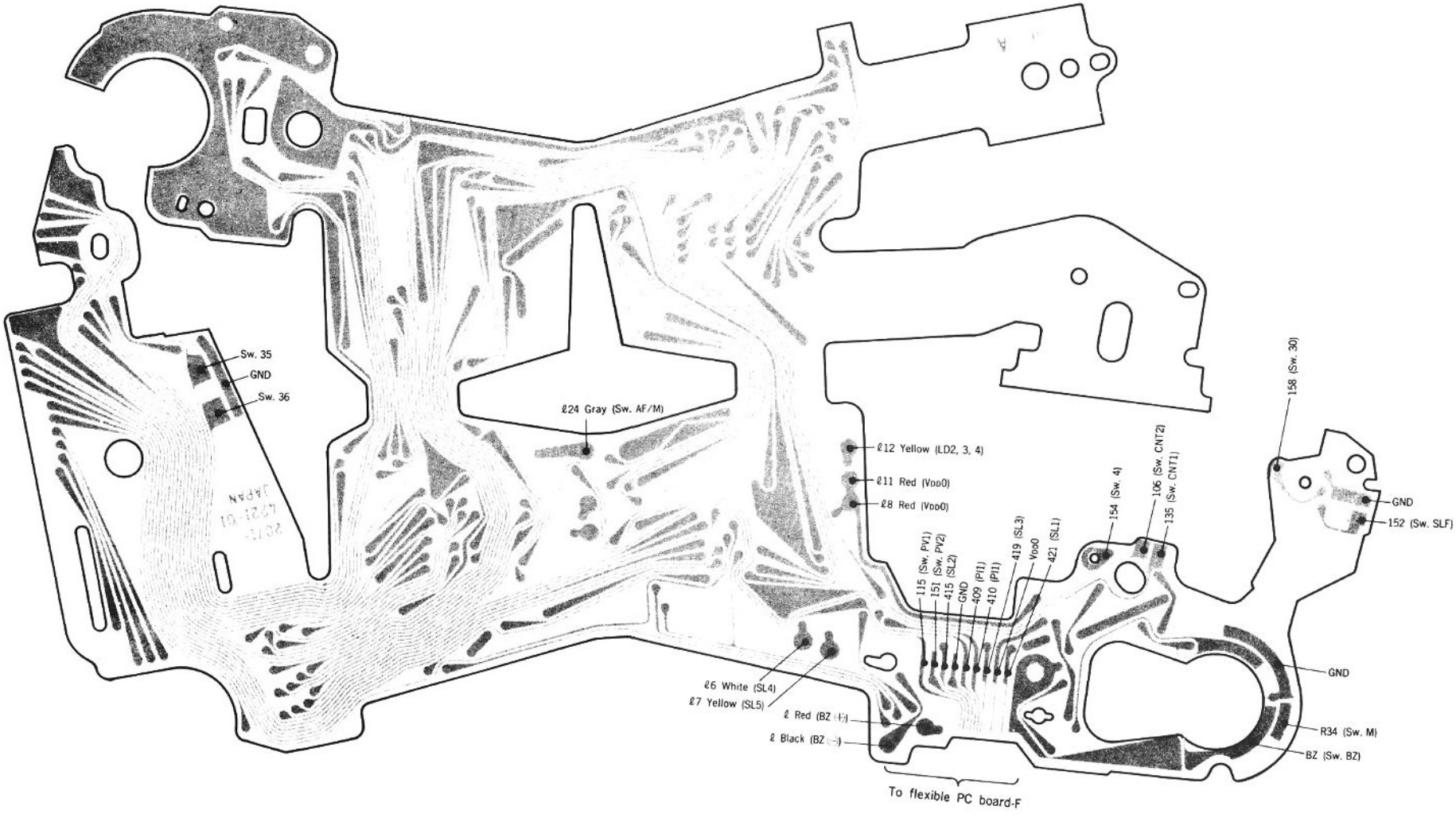

■Flexible PC board-B

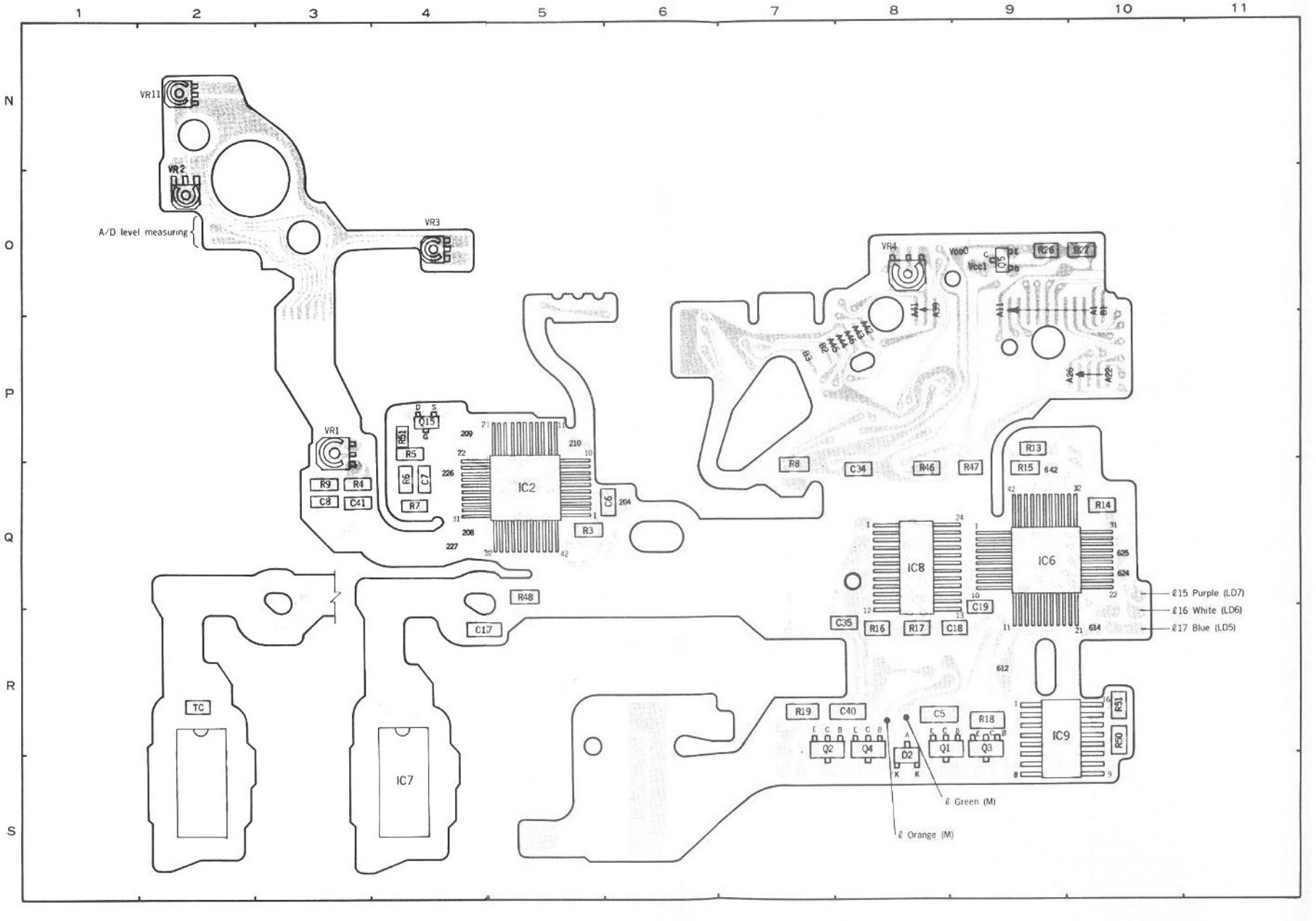

■Flexible PC board-B

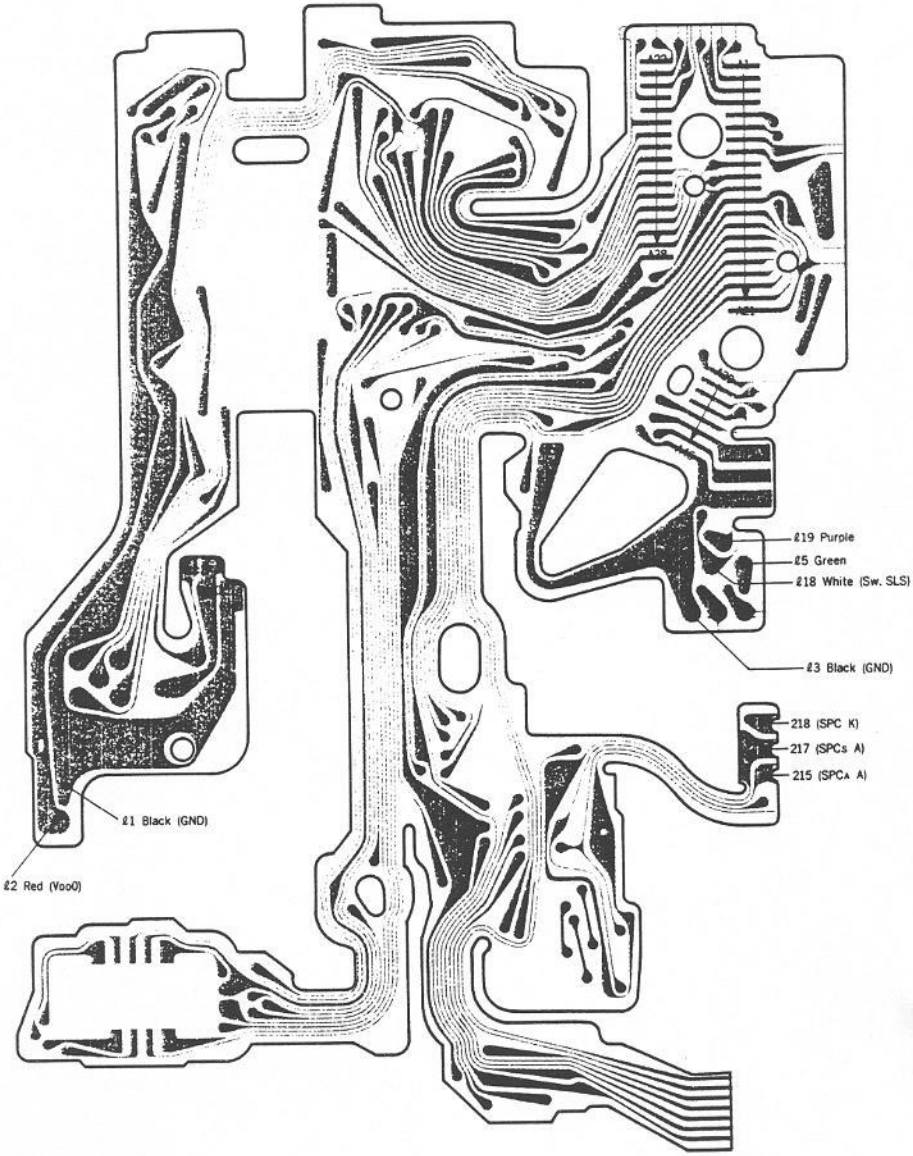

■Flexible PC board-D

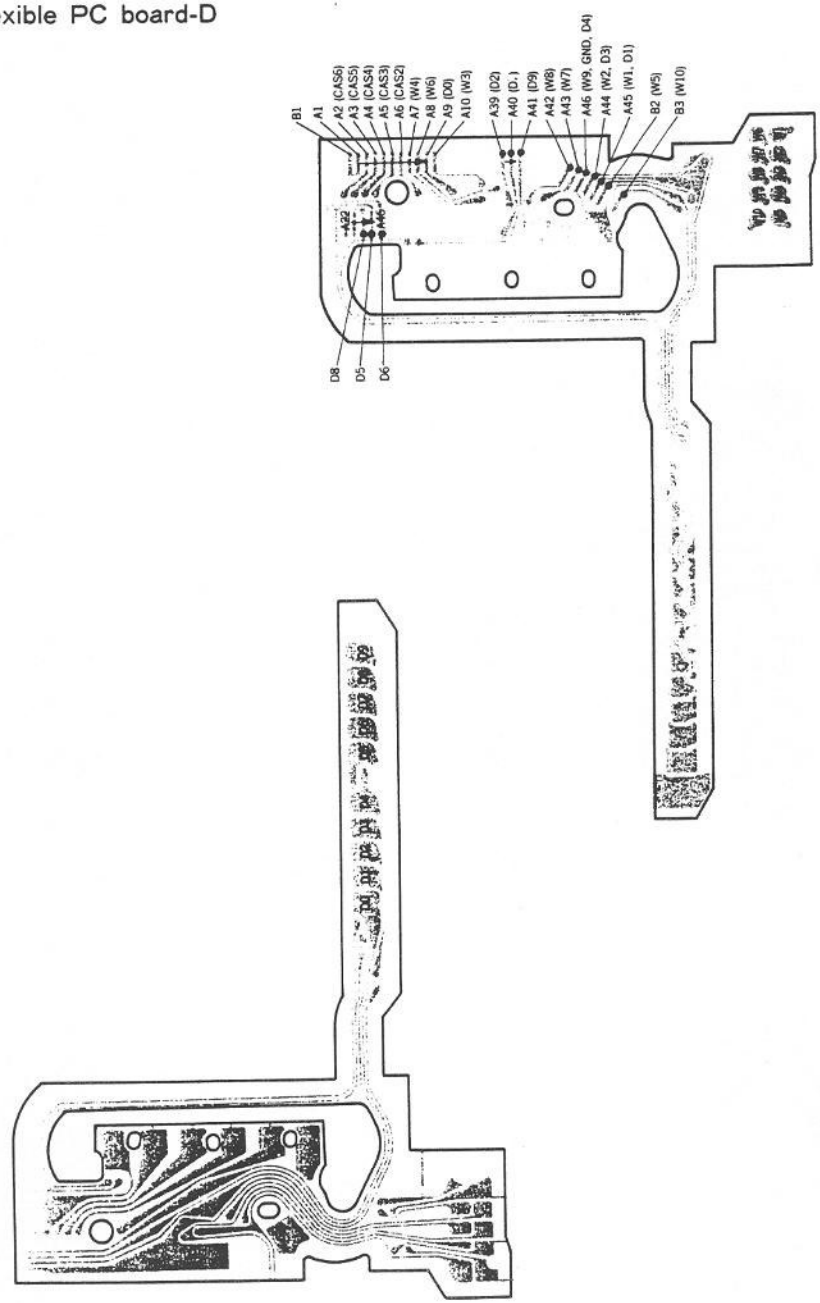

[Refevence]

— Three layers —

1. The list below shows the connecting points in three layers.
2. 3 figures shows number of IC and IC tenminal.

[Example] 3 0 7 ·····IC₃ terminal 7

IC No. — Terminal No.

3. ↔ means that flex PCB-B connects flex PCB-A and -D.
4. ( ) shows the connecting point on flex PCB-B.

	Flex PCB-A	Flex PCB-B		Flex PCB-D	Note
		A – B	B – D		
A 1	OPEN	↔		OPEN	OPEN
A 2	3 0 7	↔		CAS 6	CAS 6
A 3	3 0 8	↔		CAS 5	CAS 5
A 4	3 0 9	↔		CAS 4	CAS 4
A 5	3 1 0	↔		CAS 3	CAS 3
A 6	3 1 1	↔		CAS 2	CAS 2
A 7	1 0 2	↔		W 4	Winding signal
A 8	1 3 6	↔		W 6	F.P
A 9	1 3 5	↔		D 0	SW CNT·1
A 1 0	1 0 8	↔		W 3	Pelease prohibition
A 1 1	1 2 6	R 2 7			PWC
A 1 2	VCC 1	VCC 1			VCC1
A 1 3	4 4 8	2 4 2			A/D converting output
A 1 4	4 4 7	2 4 0			A/D converting clock
A 1 5	4 4 4	2 3 9			D/A converting input
A 1 6	4 4 6	2 3 6			D/A converting output
A 1 7	4 4 3	2 3 4			Flash integrating start
A 1 8	4 4 2	2 3 3			Flash firing stop
A 1 9	3 0 3	2 3 0			Power source for LCD
A 2 0	3 1 9	2 2 8			AVE/SPO changeover
A 2 1	(F 4)	6 3 9			F 4
A 2 2	OPEN	↔		OPEN	OPEN
A 2 3	OPEN	↔		OPEN	OPEN
A 2 4	1 3 4	↔ (R 4 6)		D 8	Serial out
A 2 5	1 3 2	↔ (R 4 7)		D 5	Serial clock
A 2 6	1 3 3	↔ (6 4 2)		D 6	Serial in
A 2 7	1 0 7	6 4 0			
A 2 8	1 0 5	6 2 5			AF clock pulse
A 2 9	VDD 1	VDD 1			VDD 1
A 3 0	4 2 4	6 2 0			AF pulse
A 3 1	1 6 0	6 1 8			AF buzzer
A 3 2	1 5 8	6 2 4			Clear
A 3 3	4 2 5	6 1 9			
A 3 4	1 0 1	6 1 7			AF end
A 3 5	1 3 1	2 3 5			Release signal
A 3 6	1 0 9	6 2 1			AF start
A 3 7	1 2 2	6 1 1			
A 3 8	GND	GND			GND
A 3 9	1 1 0	↔		D 2	Imprint
A 4 0	1 1 1	↔		D 7	
A 4 1	1 1 4	↔		D 9	
A 4 2	4 2 3	↔		W 8	F 2
A 4 3	4 2 2	↔		W 7	F 3
A 4 4	1 5 6	R 3 (contact)		W 2, D 3	SW 2
A 4 5	1 5 7	R 2 (contact)		W 1, D 1	SW 1
A 4 6	GND	R 1 (contact)		W 9, D 4	GND
B 1			SW SLS(L18)	W 5	SW SLS
B 2			X (L19)	W 1 0	F 1

CHECK LIST

1. This check list shows the allowable quality level for servicing so as to warrant product quality to the users of Minolta cameras. Each item is detailed so that you can use this check list to meet the user's requirements. Also, use this to recheck the repaired camera before returning it to the user.
2. When delivery or acceptance inspections are required, however, do not directly apply this check list to check the result of actual measurement, but follow the acceptance check list (manual) involved after grasp the meaning of inspection purpose correctly.
3. Because of user's taste or special purposes, they may sometimes require standards other than this.
   In that case, check if it is possible to meet the user's request, and perform the necessary adjustment.
4. Check under the following conditions :
   - Standard lens (2550-100) or master lens (2072-0001-75) attached.
   - Main switch ON or •))) , initial-loading completed, metering mode : AVERAGE.
   - Exclusive flash : 2800AF (8821).

   In this Check List, example of LCD display is shutter speed of 1/250, aperture of f/5.6.

Item	Checking part	Description
Power ON/hold	Main switch	Operation……Should be free from squeak, roughness. Should have proper click.
		Indication……Next letters should not be visible at click position.
		Buzzer……Should beep under following conditions in •))) position : • In-focus signal (green LED) ON with focus mode AF, metering switch ON. • In-focus signal (green LED) ON with focus mode M, touch switch ON.
	Touch switch	By touching operating button, circuits (metering, indication, AF* should be activated, measurement should be displayed, and continuous AF should start. ※ : focus-assist circuit with focus mode in M.
	Metering switch	By depressing operating button to the click stop, circuits (metering, indication AF* should be activated, measurement should be displayed, and focus should be held. ※ : focus-assist circuit with focus mode in M.
		• By operating switch*, circuits (metering, indication) should be activated. By turning the switch* OFF, power-ON should be held for 10 sec. ※ : touch switch, metering switch, film-speed key, exposure adjustment key, AE lock button. • During metering activation, power-ON should be held for 10 sec after depressing S-up/-down lever or A-up/-down lever. • After APO (auto power off) circuit activation with exclusive flash used, flash should be re-charged by touch switch (or metering switch) ON.
		Stand-by display……By turning main switch ON or •))) , body LCD should show the following stand-by display : Body LCD
Winding	Film advance lever	Operation……Should be free from unsmoothness, roughness, catching.
		Looseness……Should be less than 0.7mm when measured at the tip of the lever.

[Note] In this Check List, "S-up/-down lever" is for shutter up/down control lever, and "A-up/-down lever" is for aperture up/down control lever.

Item	Checking part	Description
Winding	Spool	Operation……Should rotate smoothly. Should take up film securely.
		Idle torque……200-300g (Measure the value ② and after. Figure below) 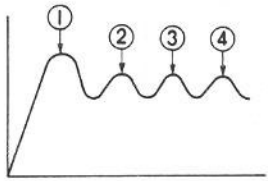
	Sprocket	Operation……Should securely advance film. Should rotate idle with rewind-release button depressed.
	Multiple-exposure button	● Should enable multiple-exposure without advancing film by operating film-advance lever with the button held down. ● Should advance film securely after canceling multiple-exposure operation.
Rewinding	Rewind-release button	Operation……Should be free from catching. Should be locked without catching. Should be unlocked (reset) when halfway operating film-advance lever.
		In lock position ……Should not get in the bottom cover. In unlock position ……Should not get out from the bottom cover.
	Rewind crank	Operation……Should be free from unsmoothness, catching.
Frame counter	Counter dial	Advancing……Should advance to "1" when winding twice after closing back cover. Should advance upto 36+1 without catching, skipping.
		Reseting……Should be reset to "S" without catching by opening back cover.
		Index……Allowable range is as follows :
Exposure-mode selector		Operation……Should rotate smoothly, without squeak, roughness.
Indication in P mode	LCD	● Should display as follows : On body 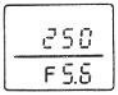 In viewfinder 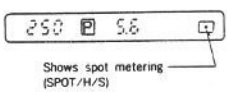 ● Each time S-up/-down or A-up/-down lever is depressed, indication of shutter speed and aperture should change by 0.5EV respectively (program shift). When the key is held down, the indication should change continuously. ● During program shift, viewfinder LED "P" should blink. ● Program shift should be canceled after power 10-sec holding.

Item	Checking part	Description
Indication in A mode	LCD	• Should display as follows : ON body 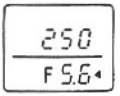 In viewfinder 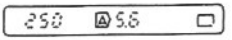 • Each time S-up/-down lever or A-up/-down lever is depressed, aperture indication should change by 0.5EV, and shutter-speed indication should change correspondingly. • When the key is held down, the indication should change continuously. • When needed shutter speed is outside the coupled range, shutter-speed indication (30", or 4000) should blink.
Indication in S mode	LCD	• Should display as follows : On body 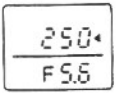 In viewfinder 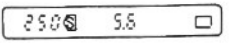 • Each time S-up/-down, or A-up/-down lever is depressed, shutter-speed indication should change by 1Ev, and aperture indication should change correspondingly. When the key is held down, the indication should change continuously. • When needed aperture is outside the coupled range, aperture indication (maximum or minimum f-number) should blink.
Indication in M	LCD	• Should display as follows : On body In viewfinder 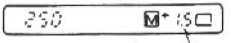 Exposure deviation of metered manual • Each time S-up/-down lever or A-up/-down lever is depressed, indication of shutter-speed should change by 1Ev, and aperture should change by 0.5Ev. • When the lever is held down, the indication should change continuously.
ISO setting	LCD	• When frame counter shows "1" with DX-coded film, LCD should display as follows and then should change to metering indication by touch switch ON. On body In viewfinder 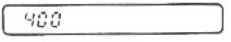 (With ISO 400 film used) (With non-DX coded film, previous ISO setting should be displayed) • Each time S-up/-down lever is depressed with film-speed key held down, ISO setting should change by 1/3 stop. When the S-up/-down lever is held down, the indication should change continuously. • When re-installing battery holder. (with DX-coded film), the ISO setting should be displayed. (with non-DX-coded film), the "ISO 100" should blink.

Item	Checking part	Description
Exposure adjustment	LCD	●(With frame counter showing number ; i.e. except "S", "●") LCD should display as follows when depressing exposure-adjustment key : On body 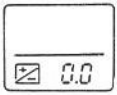 In viewfinder (When exposure adjustment is 0) ● Each time S-up/-down lever is depressed with exposure-adjustment key held down, indication of exposure-adjustment should change by 0.5EV. When the key is held down, the indication should change up/down to ±4Ev continuously.
AE lock	AE lock button	Operation……Should have proper click.
	LCD	●(In P, A, S modes) Press and hold AE lock button : the measurement (when AE is locked) should be held. ●(In P, A, S modes) Start self-timer with AE lock button held down : the measurement (when AE is locked) should be held until shutter-release even if AE lock button is unlocked.
Shutter operation	Operating button	Should be free from catching, roughness, looseness. Should have proper click.
	Shutter blade	Should be free from stain, uneven surface. Shutter opening/closing should be smooth and complete*. ※ : Check opening in slow shutter speed (1/60 or slower) setting. 1st and 2nd shutter blades should not be in sight while shutter opens. 2nd shutter-blades should not hit 1st shutter-blades.
	Self-timer	● With self-timer start, self-timer LED should blink in the following cycle : With main switch ●))) , camera should beep simultaneously. 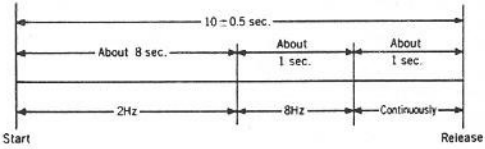 ● Self-timer activation should be canceled by depressing film-speed key or exposure-adjustment key, or by sliding down preview switch button.

Item	Description
Exposure (manual)	Manual shutter speed (Use shutter tester Model S-2201 or S-2101) ※1 : When using Model S-2101, see value in parenthesis. ※2 : Measure 5 times.

Setting speed	Reference speed	Tolerance	Dispersion ※2 (B range)	Exposure uneveness
1/4000	0.244ms	※1 0.167–0.357ms (0.147–0.337)	Within 0.45EV $^{-37}_{-27}$%	The difference between maximum and minimum values among A, B, C range should be less than 0.6EV The difference between A-B, B-C ranges should be less than 0.3EV
1/2000	0 0.488ms	0.357–0.667ms	Within 0.35EV $^{-28}_{-22}$%	
1/1000	0.977ms	0.793–1.202ms	Within 0.2EV $^{15}_{13}$%	
1/500	1.95 ms	1.58–2.4ms		
1/250	4.64 ms	4.33–4.97ms		
1/125	7.81 ms	6.34–9.62ms		
1/60	15.6 ms	12.7–19.2ms		
1/30	31.3 ms	25.4–38.5ms		
1/15	62.5 ms	50.8–76.9ms		
1/8	125 ms	102–154ms		
1/4	250 ms	203–308ms		
1/2	500 ms	406–616ms		
1"	1 s	810–1230ms		
2"	2 s	1.62–2.46s		
4"	4 s	3.24–4.92s		
8"	8 s	6.48–9.84s		
15"	16 s	12.15–18.45s		
30"	32 s	24.3–36.9s		

Synchro (X delay time)

Shutter speed	Measuring range	Tolerance
1/250	A range	0.15ms (Min.)
	B range	1.4ms (Min.)

Exposure (auto)

● AE level

With standard lens (2550-100), ISO : 100, K value : 1.3

Mode	Luminance*	Setting speed	Setting aperture*	AE level tolerance
PROGRAM	Ev 6 (5)	——	——	0±0.8Ev
	Ev 10(11)	——	——	
	Ev 15	——	——	
A	Ev 6(5)	——	F5.6(4)	0±0.8Ev
	Ev 10(11)	——	F5.6(8)	
	Ev 15	——	F5.6	
S	Ev 10(11)	1/30	——	0±0.8Ev
		1/250	——	

※ : Luminance and aperture given in ( ) are for luminance source, MODEL L-222 or L-223.

● Highlight reading (H), shadow reading (S).

Metering indication should change when AE lock button is depressed in spot-metering (H/S).

Item	Description
Exposure (auto)	**Electric flash dimmer performance** 1. Check by a luminance source L-2101 (If L-2101 is not available), check in the following No. 2 methods.) ● **Standard**···The time counter display should be within the range of **0.6~1.7ms** . ● **Checking procedures**···Set up a camera and measuring instruments as illustrated below to read the time counter display when the shutter is released. 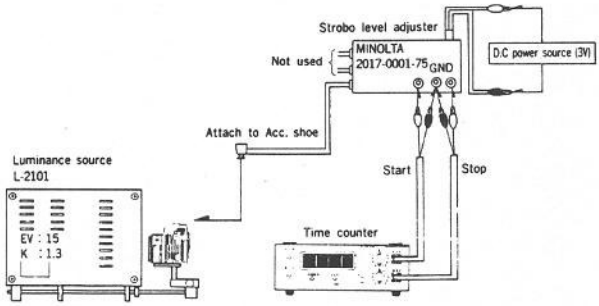 ● **Camera** Master lens (2072-0001-75) attached ※Film : Loaded Mode : A ISO : 100 ● **Time counter (TC-1)** TRIG. slope A-CH : − B-CH : + TRIG. level A-CH : +1 B-CH : +1 2. Checking by strobo tester (Model ST-Ⅲ) ● **Standard**···Strobo tester display should be within the range of **F5.6±0.8EV** . ● **Checking procedures**···Set up a camera and measuring instruments as illustrated below. 30 seconds after the pilot lamp of the electric flash lights up release the shutter and read the display of the electric flash. 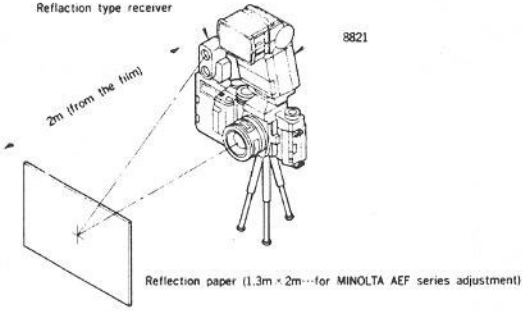 ● **Camera** Installation master lens (2072-0001-75) ※Film : Loaded Mode : A ISO : 100 ● **Strobo tester** MODE : NON. C ● **Electric flash** Hi-Low changing Sw. : Hi ※ : Use Kodacolor VR (ISO 100) which has been exposed to light (indoor) at least one day.

Item	Checking part	Description
Preview	Preview switch button	• Aperture should stop down to the setting when preview switch button depressed to the 1st click stop. LCD should dispaly as follows : The stopped-down aperture should reset to full-opening by depressing preview switch button all the way down. 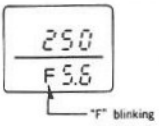 • When frame counter shows "S", "●" or when film is not advanced, preview operation should not be made.
Viewfinder illumination		Cover the lens by hand while metering : LED (viewfinder illuminator) should be turned ON.
Autofocus	Focus mode switch	• Should be free from roughness, squeak. Should have proper click. • In AF mode, continuous AF should be activated by touch switch ON, and focus held by metering switch ON. • In M (manual focus) mode, focus-assist should be activated by touch switch ON.
		AF operation • (With subject possible to autofocus) AF should be activated. When in focus, in-focus signal "●" in viewfinder (green LED) should glow. When in-focus with main switch •))) , camera should beep at 16Hz. When in-focus signal (green LED) glows, check if viewfinder image is clear with far and near subjects. • If subject (possible to autofocus) is closer than minimum distance, lens should stop at minimum distance with focus signal "▶" glowing. • (With subject impossible to autofocus e.g. too dark, or low contrast) lens should shift and stop (stop position is not regulated) with focus signal "▶◀" blinking.
		M (manual focus) operation • (With subject impossible to focus-assist e.g. too dark, or low contrast) focus signal "▶◀" should blink. • With subject possible to focus-assist, in-focus signal "●" should glow when in focus ; focus signal "▶" or "◀" when out of focus. • When in focus with main switch •))) , camera should beep at 16Hz. • Focus-assist activation should hold for 10 sec after touch switch OFF.
B.C voltage		Item / Standard LCD starts blinking / 1.45–1.52V Release lock, LCD off / 1.32–1.37V
Battery consumption		Item / Standard Metering / 250mA (max.)
Leak current		Item / Standard Main switch OFF / 50μA (max.) Main switch ON, •))) / 100μA (max.)

Item	Checking part	Description
Focusing		Body back·····44.70±0.01mm
	Mirror	Should be free from looseness, unsmooth operation, timing failure, bound during shutter opening.
	Viewfinder	Image should be free from inclination, uneven clearness. Image sharpness at infinity (∞) (Check with lens set at ∞).
	Eyepiece adjustment dial	Should re-make dioptric adjustment when turned. Should have proper click.
Others	Lens de/ attaching	Should have proper torque. Un-/locking should be smooth. Attached lens should be free from looseness.
	AF coupler	Projecting amount should be $1.6^{-0.2}_{-0}$mm. (Without lens in AF mode in the state of AF coupler projection, measure the length from flange to tip of AF coupler.)
	Back cover	● Should open (lift) by itself when lock is released. ● De-/attaching, un-/locking, roller rotation, should be smooth. ● Should not rub body when opening/closing.
	Pressure plate	Should be flat evenly ; should be free from deformation, foreign substance.
	Operation with exclusive flash	With exclusive flash fully charged. ● Viewfinder flash-signal ϟ should blink (2Hz) by touch switch ON. ● After activation of flash APO (auto power off) circuit, flash should be re-charged by touch switch ON. ● After flash fire, viewfinder flash-signal ϟ should blink (8Hz) for one sec if exposure is correct. ● Shutter and aperture indication should change as follows, corresponding to exposure mode. (ISO : 100) ● Turn metering switch ON with flash's main switch in AF position, lens covered : AF-assist light should be emitted once.

Mode	Shutter speed	Aperture
PROGRAM	1/250, 1/125 or 1/60 sec corresponding to lighting conditions.	Renge from f/2.8 to f/8 corresponding to lighting conditions.
M	1/250 sec if manually setting is 1/250-1/4000 sec ; Remains the same if manually setting is "bulb" −1/250 sec	Remains the same.
S		F5.6
A	1/250 sec.	Remains the same.

Operation with PROGRAM BACK SUPER 70, 90 PROGRAM BACK 70, 90		Should control camera properly.
Operation with MOTOR DRIVE MD90		Should control camera properly.
Operation with WIRESS CONTROLLER IR-IN, REMOTE CORD S/L		Should release shutter properly.