35FB-R.3012.A

100—36—001

Nikon FE

ニコン FE

REPAIR MANUAL

修 理 指 針

NIPPON KOGAKU K.K.

Tokyo, Japan

6248

(78. 2. c) H

Section I. Specifications & Mechanism

Content

(1) 外 観 図 Figure of external

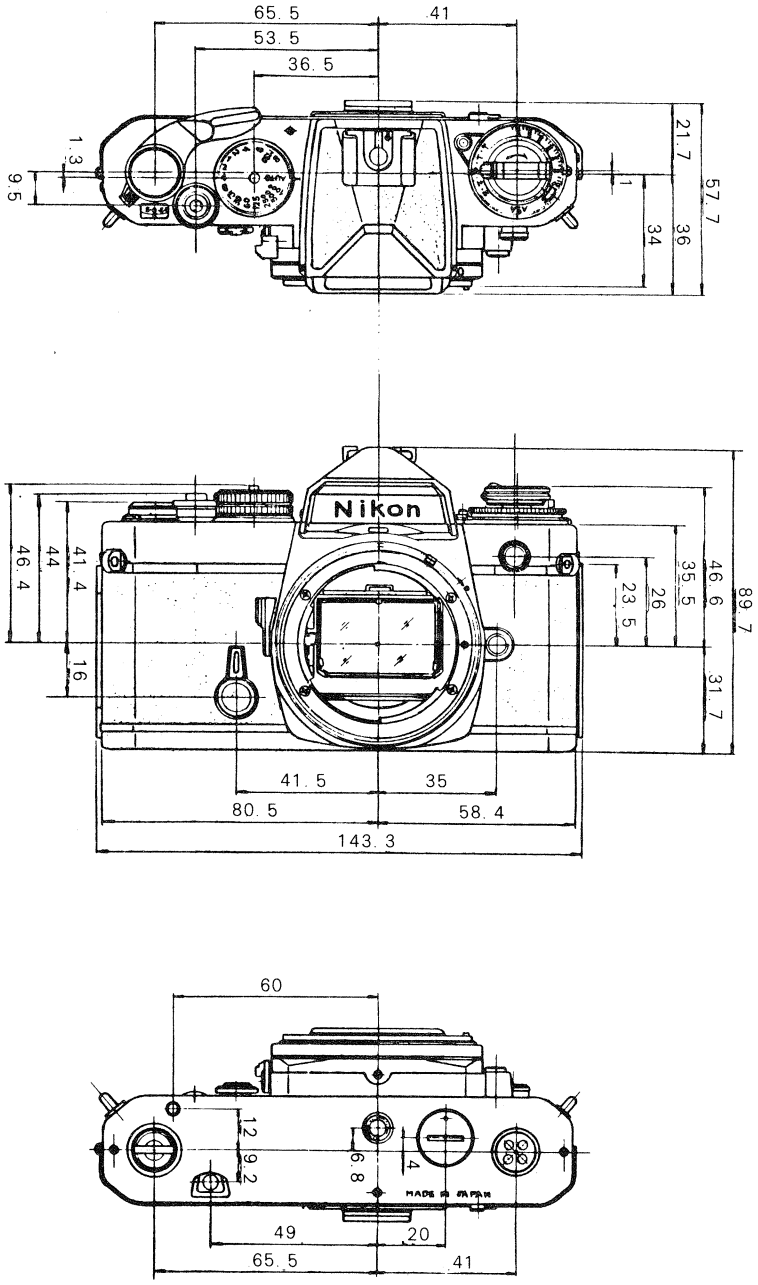

Specifications

Type of camera:	35mm single lens reflex camera
Picture format:	24mm x 36mm (35mm format); standard film cartridge
Lenses available:	Nikkor 50mm f1.4, 50mm f2, 55mm f1.2 as standard; more than 60 interchangeable Nikkor lenses in all
Lens mount:	Nikon F bayonet mount
Lens maximum aperture setting:	Automatic indexing
Shutter:	Electronic-control, vertical-travel focal-plane shutter Auto: 8sec. - 1/1000sec. Manual: B M90 (1/90 second); Mechnically controlled Built-in self-timer (Setting can be cancelled)
Viewfinder:	Fixed eye-level pentaprism type 93% frame coverage
Viewing system:	Shutter speed indicated to the left within the viewfield; (Green and black needles) lens aperture setting also indicated if lens in use is fitted with an aperture-direct-readout (ADR) lens aperture.
Focusing screen:	Interchangeable Type K, Type B, Type E
Reflex mirror:	Instant-return type
Depth-of-field preview:	Via the lever provided on front of camera
Manual film winding:	Via single-stroke lever with 135° winding angle and 30° stand-off angle
Motor drive link-up:	Electrical contacts built-in for operation with MD-11 Motor Drive Unit
Multiple exposures:	Via multi-exposure lever
Frame Counter:	Additive type; automatically resets to "S" when camera back is opened.
Film rewinding:	Manual via film rewind crank
Exposure metering:	Through-the-lens, center-weighted, full-aperture measurement employing two silicon photodiodes
Metering range:	EV1 - EV18 with 50mm f1.4 lens at ASA100
Power Source:	Two 1.5V silver-oxide batteries
Power switch:	30° stand-off position of Film-advance lever switches meter on
MD connecting switch:	Flush position of film-advance lever switches on
Battery checking:	Battery power is sufficient if the checker lamp glows
Film speed scale:	Settings provided for ASA12 - 4000
Exposure compensation range:	+2 - -2EV, Except maximum and minimum aperture settings at ASA12 or ASA4000

Memory Lock:	Via self-timer lever
Flash synchronization:	Built-in ISO-type hot-shoe contact with safety switch and ready light contact for synchronization with electronic flash units at speeds 1/125 - 8, M90, B. Synch terminal provided (JIS-B threaded type)
Ready-light lamp:	SB-10 combination Auto: The lamp lights up when SB-10 fully charged (Shutter speed becomes approx. 1/90sec.) Manual: 1/125 - B, The lamp lights up when SB-10 fully charged Manual: 1/250 - 1/1000, The lamp flickers on and off when SB-10 fully charged
Camera Back:	Hinged, swing-open type; detachable; memo holder provided
Dimensions:	143.3mm x 57.7mm x 89.7mm
Weight:	Approx. 590g (body only)

(2) Meter coupling system

Nikon FE's meter coupling system, same as that of Nikon FM or Nikon EL2, ensures the automatic maximum aperture indexing as soon as an AI-type Nikkor lens is mounted on the camera.

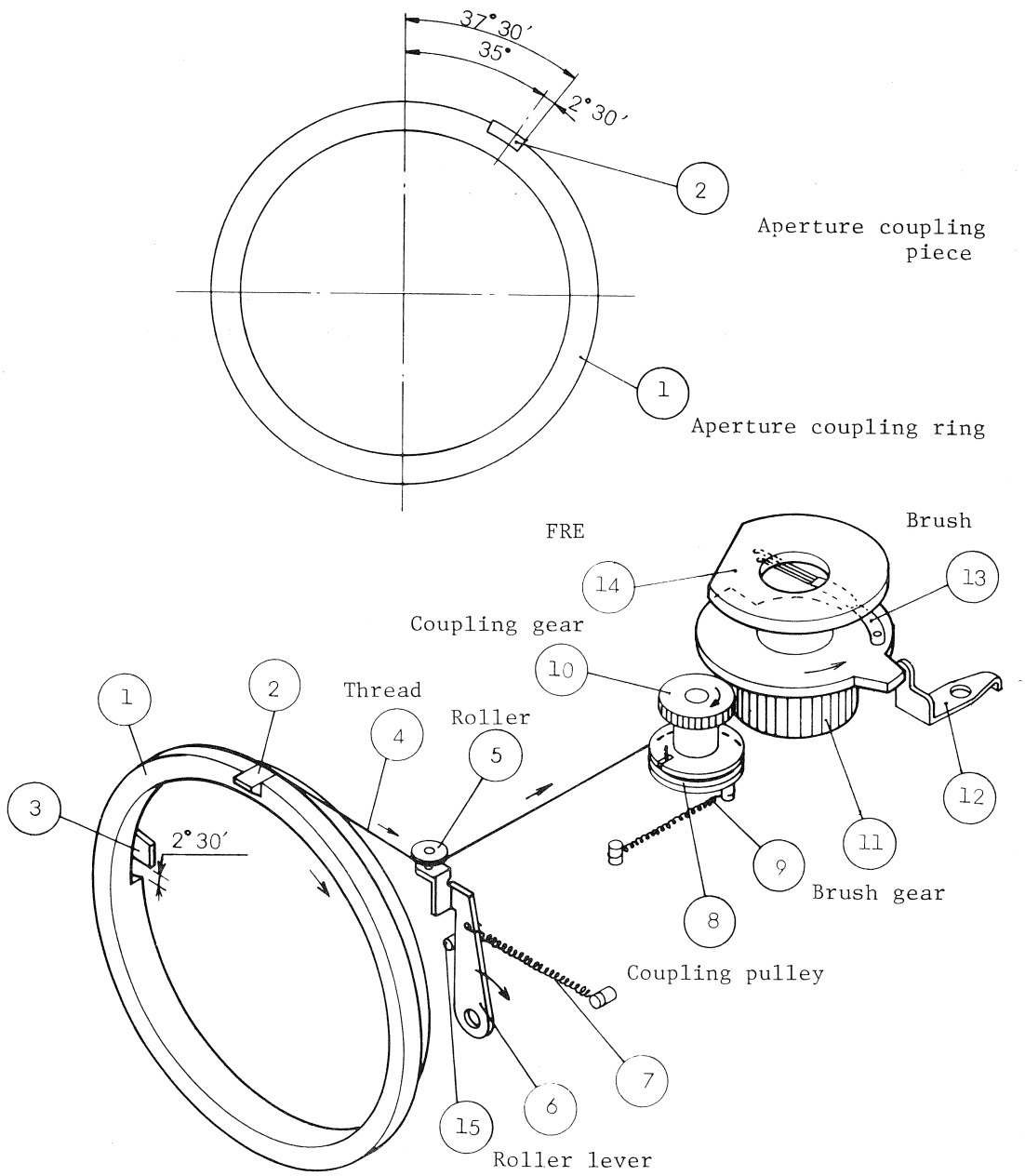

When the lens is mounted onto the camera body without pressing back aperture Coupling piece ②, lens' meter coupling ridge contacts aperture Coupling Piece ②. Thread ④, fixed onto aperture Coupling ring ① at one end and onto Coupling pulley ⑧ incorporated with Coupling gear ⑩ on the other end, is pulled by Spring ⑨ on Coupling pulley ⑧ so as to rotate ① clockwise.

Coupling gear ⑩ engages with Brush gear ⑪ on which Brush A ⑬ is installed, and Brush A ⑬ contacts FRE ⑭.
The rotation of Brush gear ⑪ to the arrow direction is stopped by Brush gear stopper ⑫ where Brush gear ⑪ engages with Brush gear stopper ⑫.
Roller ⑤ is installed free to rotate on Roller lever ⑥ which is pulled by Roller lever spring ⑦ of smaller tension than that of Spring ⑨.

When lens dismounted, Aperture coupling ring ① rotates back to the arrow direction pulled by thread ④ via Spring ⑨ and Coupling pulley ⑧.
When the right end of Aperture coupling piece ② locates at 35 degrees from the camera's vertical center line, Brush gear ⑪ engages with Brush gear stopper ⑫ and stops, simultaneously stopping Coupling gear ⑩ and Coupling pulley ⑧.
At this stage, however, there still remains a clearance of 2°30' (corresponding to 1/3 stop) between Aperture coupling ring ① and Coupling ring stopper ③, and thus Aperture coupling ring ① will further rotate to the arrow direction pulled by Roller lever spring ⑦ via ⑥⑤ and ④.

When the lens is mounted, as soon as ① starts to rotate, ⑥ fitted with ⑦ rotates 2°30' until ⑥ comes in contact with ⑮. Further rotation of ① will rotate ⑪ and ⑬ via ④, ⑧ and ⑩, thus charging the electrical resistance of FRE ⑭.
Aperture coupling piece ② contacts lens' meter coupling ridge at a position of 37°30' in case of f1.2 or f1.4 lens set at maximum aperture, while ② contacts at a position of 35° in case of lenses of wider maximum aperture such as f1.8.

Operational sequences

lens' aperture ring

② — ① — ④ — ⑤ — ⑥ — ⑧ — ⑩ — ⑪ —— ⑬

⇓ Compensation of 1/3 stop

(4) Exposure Control Circuitry System

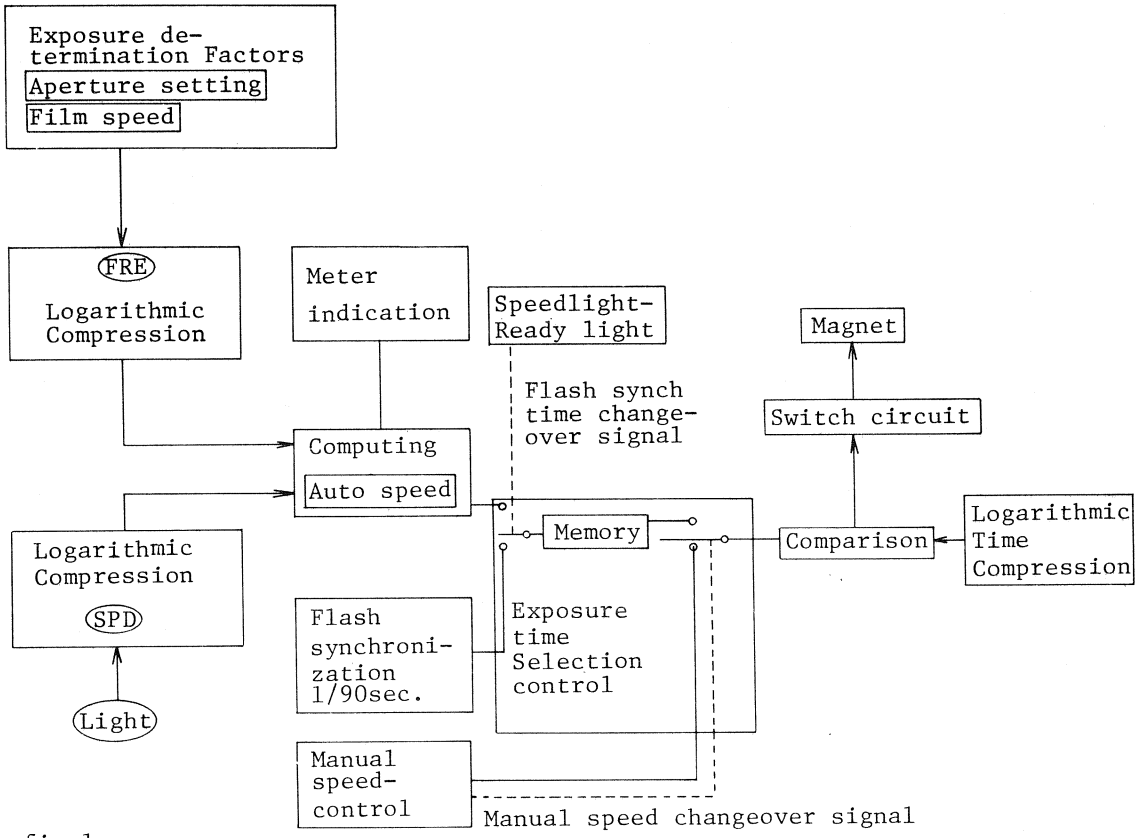

fig.1

First, the informations of film speed and aperture setting in use will be transmitted to FRE and registered as a change of resistance. Then, the resistance will be logarithmically compressed to a voltage change. The other information of light intesity will be registered as photo electric current by silicone photo Diode(SPD) positioned in the optical path in the viewfinder. The photo electric current will be also logarithmically compressed to a voltage change corresponding to the current. The voltages in two logarithmic compression circuits will be transmitted to computing circuit, where the voltage corresponding to the shutter speed for proper exposure will be determined. Consequently, meter needle swings indicating the shutter speed selected inside the viewfinder.

These circuits will be switched on by pulling out film-advance lever to a stand-off position, uncovering a red dot. In case of extremely low brightness out of the measureable range, the voltage, logarithmically compressed from photo electric current, will be detected by "Low-brightness standard voltage" in computing circuit, and the meter needle will swing into the "B" zone, thus warning the brightness to be out of the measurable range.

When the shutter release button is depressed, the mirror starts to rise. While the Mirror rising, the optical path will be cut, thus preventing the light from reaching SPD in the optical path in the viewfinder. Therefore, the information of light intensity immediately before mirror rising, that is, voltage transmitted from computing circuit should be memorized in the memory circuit.

As soon as the mirror starts rising, mirror switch in the shutter speed control circuit switches on. Then, as soon as the first shutter curtain starts to travel, the logarithmic time compression circuit functions, condensing the voltage as long as the shutter opens. Then, when the voltage, transmitted from the logarithmic time compression circuit amounts equal to the voltage determined in the memory circuit, signal will be sent from comparison circuit to switch circuit. Consequently, the magnet current holding the second shutter curtain will be switched off, thus closing the shutter curtains' opening. This is the shutter speed control system to provide proper exposure on the film.

When making flash photography with Nikon speedlight SB-10 setting the shutter dial at Auto, proper shutter speed (1/90sec) to synchronize with SB-10 will be automatically selected as soon as SB-10 powers on. To provide this automatic flash synchronization, exposure time selection control circuit is incorporated, which selects auto-speed voltage in computing circuit, flash-synchronization-speed voltage determined by speedlight power switch signal or manual speed voltage.

Exposure time selection control circuit

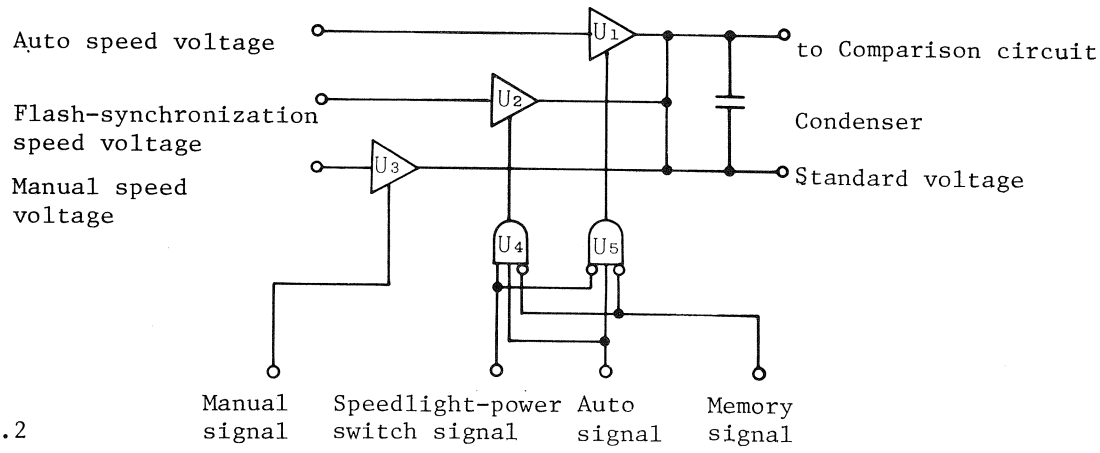

fig.2

U1, U2 and U3, analogue switches, functions as buffer amplifier when control terminal is high, and perform switch functioning to make the output impedance infinity when control terminal is low. U4 and U5 are AND circuits.

Therefore, as illustrated in Figure 2, Auto speed voltage, flash synchronization speed voltage or Manual speed voltage will be selected by auto signal, speedlight power switch signal or manual signal respectively, and transmitted to comparison circuit. Note that Auto speed voltage and flash synchronization speed voltage will be memorized into condenser by memory signal immediately before mirror rising or memory-lock operation.

Further, with this circuit incorporated, ready light LED glows on and off to warn if the shutter dial is set at the non-synchronizing manual speed. This warning system is possible by inputting the manual shutter speed signal of 1/1000 - 1/250sec. which does not synchronize with AND circuit, and the oscillator of 2 Hz. Inputting the both will turn ON and OFF a transistor and let the ready light LED glows on and off. At the slower Manual speed than 1/250sec., transistor turns off, thus turning the LED on to indicate proper synchronization.

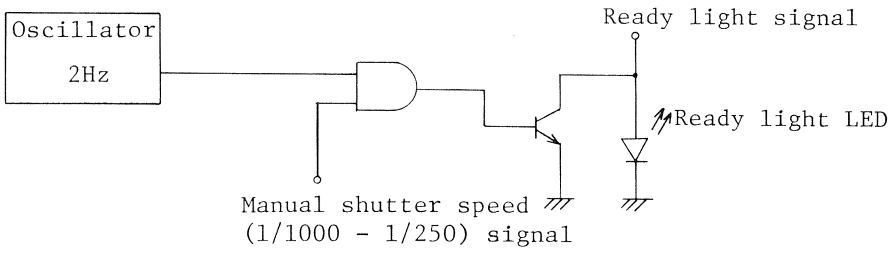

fig.3

Battery check system

To enable the aforementioned exposure control, battery check system is incorporated as illustrated in Figure 4.

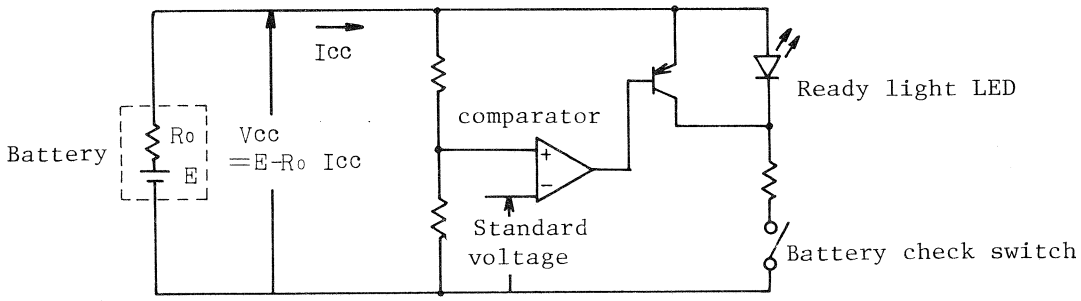

fig. 4

When battery is drained out, battery check switch turns on, thus extinguishing ready light LED. To ensure the LED extinguishment, transistor connected to the LED will be turned on and consumption current (Icc) will be increased. As a result, the voltage determined by Icc and inner resistance of battery (Ro) will be accordingly increased, thus providing hysterisis with Vcc and ensuring the positive extinguishment of ready light LED.

Current consumption	Metering exposure(EV9, ASA100, F5.6)	approx·2mA
	Shutter running (Room temperature 3V)	approx·12mA
Checker-off voltage	2.25 ±0.15V	

Section II. Part List

Content | Page

Note: 1) Nikon FE camera consists of the following two product code
35FB .....Parts exclusively used for Nikon FE
P33FB .....Parts commonly used for Nikon FE and Nikon FM

2) All parts incorporatted in Nikon FE are shown as 35FB parts or P33FB parts in this section.

3) Be sure to fill the part order form clarifying the parts for 35FB or for P33FB. Also, careful attention is required for part control and order quantity because of two different prodcut code available.

MARKS IN THE PARTS LIST 記号説明

(1) Standard mechanical elements 標準機械要素

Mark 記号	Shape 形状	Name 名称	Mark 記号	Shape 形状	Name 名称
JCIS ⊕ PM		JCIS Pan Head Machine Screw JCIS十字穴付きなべ小ねじ	HS		Hexagon Socket Head Set Screw 六角穴付き止めねじ
JCIS ⊕ CM		JCIS Countersunk Head Machine Screw JCIS十字穴付きさら小ねじ	HSB		Hexagon Socket Head Bolt 六角穴付きボルト
JCIS ⊕ OCM		JCIS Oval Countersunk Head Machine Screw JCIS十字穴付き丸さら小ねじ	(45°)P		Oval Countersunk Head Special Machine Screw すりわり付き特殊丸さら小ねじ
⊕ PM		Pan Head Machine Screw 十字穴付きなべ小ねじ	(45°)Q		Countersunk Head Special Machine Screw すりわり付き特殊さら小ねじ
⊕ CM		Countersunk Head Machine Screw 十字穴付きさら小ねじ	⊕ PTB		Pan Head Tapping Screw Type B 十字穴付きなべタッピンねじB
⊕ OCM		Oval Countersunk Head Machine Screw 十字穴付き丸さら小ねじ	⊕ CTB		Countersunk Head Tapping Screw Type B 十字穴付きさらタッピンねじB
⊕ RM		Round Head Machine Screw 十字穴付き丸小ねじ	⊕OCTB		Oval Countersunk Head Tapping Screw Type B 十字穴付き丸さらタッピンねじB
⊕ TM		Truss Head Machine Screw 十字穴付きトラス小ねじ	⊕ PT		Pan Head Tapping Screw 十字穴付きなべタッピンねじ
SR		Set Screw Round Point すりわり付き止めねじ丸さき	⊕ CT		Countersunk Head Tapping Screw 十字穴付きさらタッピンねじ
SC		Set Screw Cone Point すりわり付き止めねじとがりさき	⊕ OCT		Oval Countersunk Head Tapping Screw 十字穴付き丸さらタッピンねじ
SH		Set Screw Half Point すりわり付き止めねじくぼみさき	N		Hexagon Nut 六角ナット
TP		Taper Pin テーパピン	SPP		Spring Pin スプリングピン
STP		Straight Pin 平行ピン	E		E-ring E型止め輪

Expression 表 示 法

☆ **Standard screw 標準ねじ**

Mark, Diameter × Pitch × Length, Type or Mark, Diameter × Length, Type
記号 ねじの呼び径 ピッチ 長さ 種別 又は 記号 ねじの呼び径 長さ 種別

Ex. ⊕ RM 3×0.5×4 JCIS ⊕ PM 2×2.5 Type (3)

☆ **Pin ピ ン**

Mark, Diameter × Length
記号 呼び径 長さ

Ex. TP 2×12

☆ **Nut ナ ッ ト**

Diameter of internal thread, Mark-Type
ねじの呼び径 記号 種別

Ex. 8 N-Type (3)

☆ **E-ring E型止め輪**

Mark-Diameter
記号 呼び径

Ex. E-8

(2) The term of sale column 販売区分欄

Mark 記号	Explanation 説明	
○	Can be supplied individually	単独部品として販売するもの
△	Not supplied individually but only as subassembly	部組品でなければ販売しないもの
○△	Supplied either as part or subassembly	単独部品でも部組品でも販売するもの
×	Not considered as repair part	修理部品とは考えないもの
※	Should be sent to the factory if the repair is needed	単体では交換できないので、組む場合に工場での加工が必要なもの
◎	Delivered as a product from the sales department (i.e., not supplied as repair part)	商品として販売店で販売しているもの（修理部品扱いはしない）

(3) The remarks column 備 考 欄

32FB1#664	Part number used in common	共通部品番号
(Blue×125mn)	Lead wire (color×length)	コードの色と長さ
53F1001	Technical data sheet number	製品技術資料番号
(2.1×3.8×0.007)	Washer (internal diameter ×external diameter×thickness)	ワッシャーの（内径×外径×厚さ）
(Black)	Black-finished parts	黒部品
(d=0.2)	Diameter of wire.	線径=0.2
(t=1)	Thickness	厚さ=1
Rev.	Revision	訂正
Add.	Addition	追加
Dis.	Discontinuation	廃止

正誤表 (変更部分は後記の部品表、部組品表に各自後記入下さい)
Errata (Be sure to rewrite the parts list accooding to these lists at your end.)

35FB — R.3012.A

頁 Page	部番 Part No.	訂正箇所 Revised Portion	誤 Error	正 Correction
Ⅱ 50 Ⅲ 26	P33FB #802	部組品No. Subassembly No.	F	削除 to be deleted
		販売区分 Term of Sale	○△	△
Ⅱ 31—1	P33FB#38	個数 Pcs. per Unit	2	1
Ⅱ 32	P33FB#54	販売区分 Term of sale	○	○△
Ⅱ 35	P33FB #285—1	販売区分 Term of sale	△	○△
Ⅱ 35	P33FB #286—1	販売区分 Term of Sale	△	○△
Ⅱ 35	P33FB #291A	名称 Name	ミラー調整座金 Washer, mirror-adjusting	係止レバー調整座金 Latch lever washer
Ⅱ 44	P33FB #497	販売区分 Term of Sale	○△	△
Ⅱ 47	P33FB #661—1	専用部品 Exclusive part	P33FB#661—1	35FB#661—1
Ⅱ 52	P33FB #825A	販売区分 Term of Sale	○△	△
		部組品No. Subassembly No.	B×2	削除 to be deleted
Ⅱ 51 Ⅲ 12, 18	P33FB#822 #829	専用部品 Exclusive part	P33FB#822 P33FB#829	35FB#822 35FB#829
Ⅱ 54	P33FB #857	個数 Pcs. per Unit	1	2
		部組品No. Subassembly No.		B
		販売区分 Term of Sale	○	○△
Ⅱ 54	P33FB #856	販売区分 Term of Sale	○	○△
Ⅱ 25, 26 27, 28, 29 57, 58		訂正 Revision	参照図番 Reference Fig. No.	参照頁 Reference page
Ⅱ 27	35FB F	名称 Name		FRE

訂正表 List of revision

頁 Page	部番 Part No.	変更内容 Reason of revision	現 Former	新 New
Ⅱ 3	35FB #36	廃止 Discontinuation		
Ⅱ 8	35FB #230	廃止 Discontinuation		
Ⅱ 9	35FB #250	販売区分 Term of sale	○△	△
		部組品No. Subassembly No.		B39
Ⅱ 9	35FB #252A	販売区分 Term of Sale	○	△
		部組品No. Subassembly No.		B39

訂 正 表 List of revision

35FB — R.3012.A

頁 Page	部番 Part No.	変更内容 Reason of revision	現 Former	新 New
Ⅱ 25 Ⅲ 6, 7	35FB All	共通化 Common use	35FB All	P33FB All
			#135, #126	削除 to be deleted
Ⅱ 17 Ⅲ 12	35FB #652	図訂 Re-designed	#652	#652—1
Ⅱ 17	35FB #654	共通化 Common use	35FB#654	P33FB#654—1
Ⅱ 17 Ⅲ 12	35FB #655	図訂 Re-designed	#655	#655—1
Ⅱ 18 Ⅲ 12	35FB #665	図訂 Re-designed	#665	#665—1
Ⅱ 19	35FB #685	図訂 Re-designed	#685	#685—1
Ⅱ 23	35FB #948 追加 Addition	名称 Name		F窓遮光テープ, F-scale mask shield tape
		個数 Pcs. per Unit		1
		販売区分 Term of Sale		○△
		部組品No. Subassembly No.		B30
Ⅱ 28	L	廃止 Discontinuation		
Ⅱ 30	P33FB #21	専用化 Exclusive use	P33FB#21	35FB#21
Ⅱ 30	P33FB #23	専用化 Exclusive use	P33FB#23	35FB#23
Ⅱ 33 Ⅲ 2	P33FB #72	廃止 Discontinuation		
Ⅱ 34 Ⅲ 18	P33FB #255	販売区分 Term of Sale	○△	△
Ⅱ 37	P33FB #352—1	販売区分 Term of Sale	△	○△
Ⅲ 24		イラストにNo.を記入 Be sure to add P/N 352—1 as illustrated.	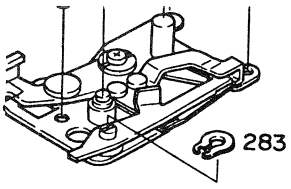	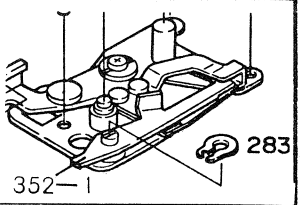
Ⅱ 37	P33FB #375	販売区分 Term of Sale	△	○△
Ⅱ 39	P33FB #401B	廃止 Discontinuation		
Ⅱ 39	P33FB #401	図訂 Re-designed	#401	#401—1
Ⅱ 39 Ⅲ 4	P33FB #405	図訂 Re-designed	#405	#405—1
Ⅱ 38 Ⅲ 2	P33FB #406	図訂 Re-designed	#406	#406—1
Ⅱ 13 Ⅲ 2	35FB #403	共通化 Commom use	35FB#403	P33FB#403—1

35FB　部品表　Parts List

35FB-R-3012-A

部品番号 Part No.	名称 Name	1台個数 Pcs.per Unit	部組品No. Subassembly No.	参照頁 Reference Page	販売区分 Term of Sale	備考 Remarks
1	ボディダイカスト Body die-casting	1			×	
2	前カバー（銘板） Front cover (Name plate)	1	B, B30		△	(Black)
3	上カバー Top cover	1	C		△	(Black)
6	前　板 Front plate	1	B		△	
7	接眼窓受 Eyepiece mount	1	C		△	(Black)
14	ターミナルアース板 Terminal earth plate	1		14	○	
17	セルフレバー軸 Self-timer lever axle	1	B, B2		△	
18	セルフ連動ギアA Self-timer gear A	1	B, B2		△	
19	セルフ連動ギアB Self-timer gear B	1	B	20	○△	
20	セルフ連動軸 Self-timer coupler	1	B	20	○△	
36	Mスイッチバネ Memory switch spring	1	B		○△	
36A	MスイッチバネA Memory switch spring A	1	B	20	○△	
36B	MスイッチバネB Memory switch spring B	1	B	20	○△	
41	Mスイッチ偏心ピン Mirror switch eccentric pin	1	B2		△	

部品番号 Part No.	名称 Name	1台個数 Pcs.per Unit	部組品No. Subassembly No.	参照頁 Reference Page	販売区分 Term of Sale	備考 Remarks
42	セルフギア制限 Self-timer gear stopper	1	B	20	○△	
52	コード溝カバー Cord groove cover	1			○	
56	ボディ擬革A Vinyl leatherette A	1		32	○	
57	ボディ擬革B Vinyl leatherette B	1		32	○	
61	ミラーアップ受けモールト Mirror-up buffer	1	B	18	○△	32FB #345 32FB1 #345
66	シュー座モールド Hot-shoe mould	1	C, C1		△	
67	Hシュー Hot-shoe contact	1	C	2	○△	
68	シューバネ Shoe contact	1	C	2	○△	(Black)
75	シンクロ接点 Synch contact	1	C, C1		△	
76	シンクロ接点ナット Nut	1	C		△	
77	埋金接点 Signal contact	1	C, C1		△	
78	ペンタ革 Penta cover leatherette	1	C	2	○△	
79	緩衝板 Shock absorb plate	1		28	○	
81	前板孔カバー Front plate hole lid	2		18	○	

部品番号 Part No.	名称 Name	1台個数 Pcs.per Unit	部組品No. Subassembly No.	参照頁 Reference Page	販売区分 Term of Sale	備考 Remarks
83	ミラーボックス後部モルト Light-tight mirror box back	1	B, B38		△	
84	アースラグ板 Earth lug plate	1	C	2	○△	
86	ミラーボックス後部遮光板 Mirror box light-shield plate	1	B, B38		△	
92	接眼部補強板 Eyepiece reinforcement plate	1	C		△	
94	レディライト Ready-light	1	C, C6		△	
95	LED遮光板 LED light baffle	1	C	2	○△	
100	シャッター Shutter	1		26	○	再生可能部品 Repairable component parts
101	ICプリント板 IC printed circuit	1	M		△	
102	IC, A IC, A	1	M		△	
103	SPDプリント板 SPD printed circuit	1	M	2	△	
106	ICB IC, B	1	M		△	
107	抵抗ブロックA Resistor block A	1	M		△	
108	抵抗ブロックB Resistor block B	1	M		△	
109	レディライトプリント板 Printed circuit, ready-light	1	C, C6		△	

部品番号 Part No.	名称 Name	1台個数 Pcs.per Unit	部組品No. Subassembly No.	参照頁 Reference Page	販売区分 Term of Sale	備考 Remarks
111	スイッチングトランジスター Switch transistor	1	J		Δ	(2SA811)
112	電解コンデンサー Capacitor	1	J		Δ	(6V, 4.7μF)
113	メモリコンデンサー Memory capacitor	1	M		Δ	(20V, 6.8μF)
114	タイマコンデンサー Self-timer capacitor	1	M		Δ	(10V, 1μF)
115	発振防止コンデンサー Anti-oscillation capacitor	1	M		Δ	(35V, 0.1μF)
116	点滅コンデンサー Capacitor	1	M		Δ	(10V, 1μF)
117	点滅抵抗 Resistor	1	M		Δ	(330KΩ)
118	トリガ抵抗A Trigger resistor A	1	M		Δ	(0.1KΩ)
120	ラッチ防止トリガ抵抗C Latch-prevention resistor C	2	M		Δ	(10KΩ)
121	チェッカー抵抗A Checker resistor A	1	J		Δ	(0.12KΩ)
122	チェッカー抵抗B Checker resistor B	1	J		Δ	(1KΩ)
123	チェッカー抵抗C Checker resistor C	1	J		Δ	(0.22KΩ)
124	チェッカーLED チェッカー抵抗 Checker LED	1	J		Δ	
126	レバースイッチコード Lead wire, lever switch	1	A11	6, 28	○Δ	(Red, Orange x 200mm)

部品番号 Part No.	名称 Name	1台個数 Pcs.per Unit	部組品No. Subassembly No.	参照頁 Reference Page	販売区分 Term of Sale	備考 Remarks
127	電源コード Lead wire, power source	1		28	○	(Orange, Black x 115mm)
128	シャッタスイッチコード Lead wire, shutter switch	1	B	20	○△	(Orange, Pink x 155mm)
129	トリガスイッチコード Lead wire, trigger switch	1		26	○	(Blue, Yellow x 70mm)
130	FREコード Lead wire, FRE	1	J	14	○△	(Orange, Yellow, Green, Black x 55mm)
131	管制部コードA Lead wire A, shutter speed control	1		10	○	(Brown, Yellow, Purple, Blue x 40mm)
132	管制部コードB Lead wire B, shutter speed control	1		10	○	(White x 25mm)
133	プラスコードA Lead wire A	1	J	14	○△	(Red x 65mm)
134	プラスコードB Lead wire B	1		28	○	(Red x 50mm)
135	マグネットプラスコード Lead wire, magnet ⊕	1	A11	6	○△	(Orange x 50mm)
136	MDスイッチコード Lead wire, MD switch	1	K	4, 28	○△	(Blue x 185mm)
137	後幕シグナルコードB Lead wire B, second curtain signal	1	K	4, 26 28	○△	(Purple x 210mm)
138	後幕シグナルコードA Lead wire A, second curtain signal	1		26	○	(Green x 40mm)
139	メモリロックコード Lead wire, memory lock	1	B9, B	20	○△	(Black x 40mm)
140	ミラースイッチコード Lead wire, mirror switch	1	B9, B	20	○△	(Gray x 125mm)

部品番号 Part No.	名称 Name	1台個数 Pcs.per Unit	部組品No. Subassembly No.	参照頁 Reference Page	販売区分 Term of Sale	備考 Remarks
142	シンクロコードA Lead wire A, synch	1		18, 26	○	(Blue x 45mm)
143	シンクロコードB Lead wire B, synch	1		14 18	○	(Blue x 115mm)
144	チェッカーコード Lead wire, checker	1	J	14	○△	(Purple x 40mm)
201	マウント台 Bayonet mount	1	B	16	○△	
206	糸掛けピン Thread supporting pin	1	B, B4		△	
207	絞り連動環 Aperture coupling ring	1	B, B4		△	(Black)
222	連動環回転制限 Coupling ring stopper	1	B	16	○△	
224	ブラシ連動ギア Brush coupling gear	1	B, B25		△	
225	ブラシ連動プーリー Brush coupling pulley	1	B, B25		△	
226	ブラシ連動ギア軸 Brush-gear axle	1	B, B25		△	
229	プーリー制限B Pulley stopper B	1	B, B25		△	
230	糸掛けカラー Thread connecting collar	1	B, B25		△	
231	ペンタ抑え板 Prism-retaining plate	1	M	18	△	
233	プリズム押えばね Prism retainer spring	2		18	○	

部品番号 Part No.	名称 Name	1台個数 Pcs.per Unit	部組品No. Subassembly No.	参照頁 Reference Page	販売区分 Term of Sale	備考 Remarks
235	ミラー保持基板 Mirror retaining base plate	1	N1		△	
236	ミラー調整板 Mirror adjusting plate	1	N1		○△	
237	F目盛マスクA F-scale mask A	1	B, B30		△	
238	F目盛マスクB F-scale mask B	1	N1		△	
239	ミラー調整カシメピン Rivet, mirror adjusting plate	1	N1		△	
240	スクリーンロックバネ Screen lock spring	1	B	18	○△	
243	スクリーンロックバネ鋲 Screen lock rivet	4	B, B22		△	
244	スクリーンバネ Screen frame spring	2	B, B22		△	
245	スクリーン枠 Screen frame	1	B, B22		△	
248	スクリーン枠軸 Screen frame shaft	2	B B34 x 1 B35 x 1		△	
250	プリズムボックス Prism box	1	B		○△	
251	視野枠 Finder field frame	1		18	○	
252	間隔枠 Spacer	1		18	○	
252A	メーター部視野枠 Meter view frame	1			○	

部品番号 Part No.	名称 Name	1台個数 Pcs.per Unit	部組品No. Subassembly No.	参照頁 Reference Page	販売区分 Term of Sale	備考 Remarks
253	プリズム絞り板 Prism mask	1		18	○	
254	接眼横遮光板 Light baffle	2		18	○	
257	SPD視野枠 SPD view-field frame	2	N4		△	
258	フォトダイオード Photo diode (SPD)	2	M		△	
259	接眼モールドメガネ Eyepiece mold	1	N4		△	
260	SPDプリント板押え SPD printed board retainer	1		18	○	
262	コロ Roller	1	B, B7		△	
263	コロ軸 Roller axle	1	B, B7		△	
264	糸はずれ防止板B Thread retaining plate	1	B, B7		△	
265	コロレバー Roller lever	1	B, B7		△	
266	コロレバー軸 Roller lever axle	1	B	20	○△	
267	コロレバーバネ Roller lever spring	1	B	20	○△	(d=0.35)
268	ブラシ連動ギア基板 Brush-coupling gear base plate	1	B, B25		△	
269	糸 Thread	1	B, B25		△	

部品番号 Part No.	名称 Name	1台個数 Pcs.per Unit	部組品No. Subassembly No.	参照頁 Reference Page	販売区分 Term of Sale	備考 Remarks
270	Gリング G-ring	1	B, B37	24	○△	
282	ブレーキ解除軸 Brake release shaft	1	B, B37		△	
283	Gリング G-ring	1	B, B37	20, 24	○△	
284	Gリング G-ring	1	B, B37	24	○△	
287	ミラーボックス下部基板 Mirror box base plate	1	B, B37		△	
302	巻上側チリトリ回転軸 Mirror holder shaft	2	B, B34 B35		△	
304	ミラーチリトリ駆動板 Mirror holder actuating plate	1	B, B26		△	
305	エアーダンパー駆動板 Air damper actuating plate	1	B, B26		△	
308	チリトリピンB Mirror holder pin B	1	B, B26		△	
309	絞り込みレバー Diaphragm set lever	1	B, B32		△	
311	手動絞り込みレバー軸A Manual stop-down lever shaft	1	B, B27		△	
311A	インサート板 Insert plate	1	B, B32		△	
313	手動絞りレバーばね Manual stop-down lever spring	1	B	22	○△	
314	絞りレバービス Diaphragm actuating lever screw	1	B	22	○△	

部品番号 Part No.	名称 Name	1台個数 Pcs.per Unit	部組品No. Subassembly No.	参照頁 Reference Page	販売区分 Term of Sale	備考 Remarks
318	手動絞りレバー座 Manual stop-down lever washer	1	B	22	○△	
320	シャッターレリーズカラー Shutter release collar	1	B	22	○△	
321	シャッターレリーズレバー Shutter release lever	1	B	22	○△	
322	ミラーアップレバー Mirror-up lever	1	B, B12		△	
323	ミラーダウンレバー Mirror-down lever	1	B, B13		△	
327	ミラースイッチ絶縁カラー Mirror switch insulator	1	B, B12		△	
329	ミラーアップ押えレバー Mirror-up stop lever	1	B	22	○△	
332	ミラー軸止板 Mirror shaft stopper	2	B, B34 B35		△	
334	大レバー軸 Mirror charge lever axle	1	B, B37		△	
335	大レバー軸ブッシュ Mirror charge lever axle bush	1	B, B11		△	
337	45°ストッパー座 45° stopper base	1	B, B16		△	
338	45°ストッパー座止ビス 45° stopper base screw	1	B	18	○△	
343A	ダウンばね Mirror-down spring	1	B, B37	24	○△	(d=0.28)
348	シャッターレリーズばね Shutter release spring	1	B	22	○△	(d=0.23)

部品番号 Part No.	名称 Name	1台個数 Pcs.per Unit	部組品No. Subassembly No.	参照頁 Reference Page	販売区分 Term of Sale	備考 Remarks
349	ミラーアップばね Mirror-up spring	1	B		○△	(d = 0.26)
350	ミラーアップレバー係止ピン Mirror-up lever latch pin	1	B, B13		△	
353	MD巻上げ中間レバー軸 MD take-up signal middle lever axle	1	B, B37		△	
361	ミラーアップ押えレバーばね掛け Spring stud	1	B	22	○△	
362	ダウンレバー調整レバー Down lever adjusting lever	1	B, B37		△	
363	ダウンレバー緩衝ゴム Shock absorb rubber	1	B, B37	24	○△	
367	調整レバー偏心軸 Down lever eccentric axle	1	B, B37		△	
368	ダウンレバー調整レバー軸 Down lever adjusting axle	1	B, B37		△	
377	ミラーレバー軸取付板 Mirror lever shaft base	1	B, B17		△	
378	ミラースプリング大 Mirror spring (L)	1	B, B12	22	○△	(d=0.45)
401A	巻上レバーブッシュ Film-advance lever bush	1	P3		△	
403	レバー押えねじ Wind-up lever screw	1		2	○	(Black)
404A	枚数計押え板 Counter retaining ring	1	K	4	○△	
451	上地板 Upper base plate	1	K		△	

部品番号 Part No.	名称 Name	1台個数 Pcs.per Unit	部組品No. Subassembly No.	参照頁 Reference Page	販売区分 Term of Sale	備考 Remarks
468	レリーズ釦飾り環 Release button ring	1	C	2	○△	
469	かぶせレリーズ環 Release ring	1	C	2	○△	
472	ロックレバー Lock lever	1	P4		△	
474	スイッチ絶縁カシメピン Switch insulator caulking pin	1	P4		△	
475	スイッチ絶縁パイプ Switch insulating tube	1	P4		△	
476	スイッチ制限ばね Switch stopper spring	1		4	○	(d=0.23)
478	絶縁モールド Mold insulator	1	K, K4		△	
484	スイッチレバー Lever switch	1	K, K4		△	
486	スイッチ絶縁ピン Switch insulating pin	1	K, K4		△	
490	多重撮り連結レバー Multi-exposure lever	1	K	4	○△	
491	多重撮りツマミ Multi-exposure knob	1		2	○	
493A	多重撮りシート Multi-exposure sheet A	1		2	○	(0.1t)
493B	多重撮りシート Multi-exposure sheet B	1		2	○	(0.18t)
493C	多重撮りシート Multi-exposure sheet C	1		2	○	(0.25t)

部品番号 Part No.	名称 Name	1台個数 Pcs.per Unit	部組品No. Subassembly No.	参照頁 Reference Page	販売区分 Term of Sale	備考 Remarks
503-1	枚数計窓 Frame-counter window	1	C	2	○△	
518	レリーズレバー Release lever	1	B, B19		△	
518A	シーソーレバー See-saw lever	1	B	20	○△	
519	レリーズレバー軸 Release lever axle	2	B	20	○△	
519A	偏心調整ピン Eccentric pin	1	B, B19		△	
527	レリーズ軸 Shutter release shaft	1		26	○	
540B	MDスイッチ絶縁板B MD-switch insulation plate B	1	K, K3	4	○△	
540C	MDスイッチ絶縁板C MD-switch insulation plate C	1	K, K3	4	○△	
540D	MDスイッチ絶縁板D MD-switch insulation plate D	1	K, K3	4	○△	
541	管制部 Shutter speed control	1	R		△	
541A	シャッターダイヤル管 Shutter dial tube	1	R	14	○△	
541B	シャッター目盛板 Shutter speed scale	1	R	14	○△	
541C	ボタン飾り座 Washer	1	R		△	
541D	セットビス Set screw	1	R	14	○△	

部品番号 Part No.	名称 Name	1台個数 Pcs.per Unit	部組品No. Subassembly No.	参照頁 Reference Page	販売区分 Term of Sale	備考 Remarks
541E	ロック解除ボタン Rewind lock release button	1	R		△	
541F	ロック解除板 Rewind lock release plate	1	R		△	
558	FRE絶縁板 FRE insulator	1	F2		△	
570	マニュアル抵抗体 Manual-setting resistor	1	R		△	
575	飾り環 Cover ring	1	C	2	○△	(Black)
577	飾り環座金 Cover ring washer	1	C	2	○△	
630	FREプリント板 FRE printed circuit	1	J		△	
631	ブラシギア制限 Brush gear stopper	1	J		△	
632	ブラシギア制限ピン Brush gear stopper pin	1	J		△	
633	チェッカーバネ Checker spring	1	J		△	
634	チェッカーバネカラー Checker spring collar	1	J		△	
635	チェッカーバネピン Checker spring pin	1	J		△	
636	チェッカーバネ座金 Checker spring washer	1	J		△	(1×3.5×0.4)
637	チェッカーレバー Checker lever	1	C, C5		△	

部品番号 Part No.	名称 Name	1台個数 Pcs.per Unit	部組品No. Subassembly No.	参照頁 Reference Page	販売区分 Term of Sale	備考 Remarks
638	チェッカーレバー軸 Checker lever axle	1	C, C5		△	
639	止め輪 Snap ring	1	C	2	○△	
641	止め輪 Snap ring	1	F	14	○△	
642	E－リング E-ring	2	B, B25 B7 x 1	20	○△	
643	チェッカー窓 Checker window	1	C, C5		△	
651	巻戻軸受 Rewind shaft bearing	1		14	○	
652	巻戻軸 Rewind shaft	1		12	○	
653	巻戻ノブ Rewind knob	1		12	○	
654	巻戻レバー Rewind crank	1	H1		△	32FB#604 32FB1#604
655	巻戻し軸受け板用バネ Spring	1		12	○	(d=0.26) 32FB#605 32FB1#605
657	巻戻ツマミ Rewind crank knob	1	H1		△	32FB1#657
658	巻戻ツマミ軸 Rewind crank knob shaft	1	H1		△	32FB1#658
659	開閉ノブ押えグリップ Cover latch retaining clip	1		12	○	32FB1#659
660	巻戻軸座金 Rewind shaft washer	1		12	○	32FB1#610-1

部品番号 Part No.	名称 Name	1台個数 Pcs.per Unit	部組品No Subassembly No.	参照頁 Reference Page	販売区分 Term of Sale	備考 Remarks
662	フリクションバネ Friction spring	1		12	○	(d=0.32)
664-1	開閉ノブ O. C knob	1		12	○	32FB1 #664
665	巻戻軸ガイド Rewind shaft guide	1		12	○	
667	ASAダイヤル基板 ASA dial mount	1	F1		△	
668	ASAダイヤル ASA dial	1	F4		△	(Black)
669	ASAクリック釦 ASA click button	1		12	○	
670	ASAクリックばね ASA click spring	1		12	○	
671	ASA目盛貼付環 ASA dial base disk	1	F	12	○△	
672	ASA目盛板 ASA dial	1	F	12	○△	
676	ASAクリック板 ASA click plate	1	F	12	○△	
677	FRE回転軸 FRE shaft	1	F1		△	
678	FRE環 FRE ring	1	F2		△	
679	FRE絶縁板 FRE insulating plate	1	F2		△	
682	ブラシA Brush A	1	F3		△	30FD17 #682

部品番号 Part No..	名称 Name	1台個数 Pcs.per Unit	部組品No. Subassembly No.	参照頁 Reference Page	販売区分 Term of Sale	備考 Remarks
683	ブラシ板 Brush mount	1	F3		△	
684	ＦＲＥ導電盤 FRE conducting plate	1	F2		△	
685	摺動ブラシＡ Sliding brush A	1	J		△	
686	ブラシギア Brush gear	1	F	14	○△	
687	目盛貼付環押え板 ASA dial base dish retainer	1	F	12	○△	32FB1 #641-1
688	開閉ロックレバー Rewind knob lock lever	1		12	○	
689	ロックレバー軸 Knob lock lever shaft	1		12	○	32FB1 #660
691	ＡＳＡダイヤル受座 ASA dial mount	1		12	○	
692	露出補正バネ Exposure correction spring	1	F	12	○△	
693	ＡＳＡ連動板 ASA coupler	1	F	12	○△	
694	ブラシ用ゼンマイ Brush spring	1	B, B25		△	
695	露出補正クリックピン Exposure correction click pin	1	F4		△	32FB1 #691
697	ブラシナット Brush nut	1	F	14	○△	
698	摺動ブラシＢ Sliding brush B	1	F	14	○△	

部品番号 Part No.	名称 Name	1台個数 Pcs.per Unit	部組品No. Subassembly No.	参照頁 Reference Page	販売区分 Term of Sale	備考 Remarks
706	裏蓋蝶番A Camera back hinge A	1		32	○	
708	止め爪 Latch B	1		32	○	
807	小ねじ JCIS ⊕ PM 1.7 x 2 Type (3) Screw	1	B	22	○△	
808	抵抗函回転軸ビスA FRE shaft screw	4		12	○	32FB #808 32FB1 #808
809	底部押え板取付ビス Retaining plate screw	3			○	
818	小ねじ JCIS ⊕ PM 1.7 x 3 Type (3) Screw	1	B	20	○△	
826	ブラシ板ビス Brush screw	4	F	12, 14 20	○△	
827	ブラシ連動ギヤビス Brush coupling gear screw	3	N1 x 1 B B25 x 2	18 20	○△	
828	小ねじ JCIS ⊕ CM 2 x 2.5 Type (1) Screw	1	B	18	○△	
834	小ねじ JCIS ⊕ PM 2 x 2 Type (1) Screw	1	B	22	○△	
836	巻戻し軸受ビス Rewind shaft bearing screw	5	B x 2	14	○△	
837	MDスイッチ取付ビス MD switch screw	1	K	4	○△	
839-1	小ねじ JCIS ⊕ PM 1.7 x 2.5 Type (3) Screw	3	B x 2	20, 18	○△	
853	小ねじ JCIS ⊕ PM 1.7 x 2.5 Type (3) Screw	1	B, B37		△	

部品番号 Part No.	名称 Name	1台個数 Pcs.per Unit	部組品No. Subassembly No.	参照頁 Reference Page	販売区分 Term of Sale	備考 Remarks
861	FREプリント板ビス FRE printed board screw	5		14	○	
862	小ねじ JCIS ⊕ PM 1.7 x 1.5 Type (1) Screw	2	B	18	○△	
863	ミラーボックス下基板ビス Mirror box base plate screw	3	B	24	○△	
864	後ブレーキばね取付ピン Rear brake spring pin	2	B, B37		△	
873	シュービス（短） Hot shoe screw	4	C	2	○△	
877	シャッターレリーズレバー軸 Shutter release lever axle	1	B	22	○△	
880	Bレバー解除ビス B-lever release screw	1		26	○	
896	連動板取付ビス Aperture coupling plate screw	2	F		○△	32FB #845 32FB1 #846
898	Sダイヤル基板ビス Shutter dial screw	3		14	○	
904	MDスイッチ接片A MD switch contact A	1	K, K3	4	○△	
905	MDスイッチ接片B MD switch contact B	1	K, K3	4	○△	
920	固定接点 Fixed contact	1	A5		△	
921	可動接点 Spring side contact	1	A5		△	
925	シャッタースイッチA Shutter switch A	1	B9, B		△	

部品番号 Part No.	名称 Name	1台個数 Pcs.per Unit	部組品No. Subassembly No.	参照頁 Reference Page	販売区分 Term of Sale	備考 Remarks
926	シャッタースイッチB Shutter switch B	1	B9, B		△	
927	ミラースイッチA Mirror switch A	1	B9, B		△	
928	ミラースイッチB Mirror switch B	1	B9, B		△	
930	ミラースイッチ調整ビス Mirror switch adjusting screw	1	B	18	○△	
931	ミラースイッチ絶縁板A Mirror switch insulator A	3	B9, B		△	
932	ミラースイッチ絶縁板B Mirror switch insulator B	1	B9, B		△	
933	ミラースイッチ絶縁板C Mirror switch insulator C	1	B9, B		△	
934	メモリースイッチA Memory lock switch A	1	B	20	△	
935	メモリースイッチB Memory lock switch B	1	B	20	△	
936	メモリースイッチ絶縁板A Memory switch insulator A	1	B	20	△	
937	メモリースイッチ絶縁板B Memory switch insulator B	1	B	20	△	
939	絶縁ルミラー Front plate insulator	1	B	20	○△	
941	シュー連結接点A Shoe connecting contact A	1	N4		△	
942	シュー連結接点B Shoe connecting contact B	1	N4		△	

部品番号 Part No.	名称 Name	1台個数 Pcs.per Unit	部組品No. Subassembly No.	参照頁 Reference Page	販売区分 Term of Sale	備考 Remarks
943A	Fミラー調整座金 Washer	1	N1	18	○△	(1.6 x 2.8 x 0.2)
943B	Fミラー調整座金 Washer	1	N1	18	○△	(1.6 x 2.8 x 0.4)
943C	Fミラー調整座金 Washer	1	N1	18	○△	(1.6 x 2.8 x 0.6)
943D	Fミラー調整座金 Washer	1	N1		○△	(1.6 x 2.8 x 0.8)
944A	Jプリント板ゴム J print rubber	1	C	2	○△	(t=0.8)
944B	Jプリント板ゴム J print rubber	1		14	○	(t=1.2)
945A	ワッシャー Washer	1			○	(6 x 10 x 0.05)
945B	ワッシャー Washer	1			○	(6 x 10 x 0.1)
945C	ワッシャー Washer	1			○	(6 x 10 x 0.07)
946	ミラースイッチ押え板 Shutter switch retainer	1	B, B9	20	△	
947	シャッター後遮光モルト Light tight	1			○	
G2-K	フレネルKタイプ Fresnel screen K type	1		18	○ ◎	
G4	接眼レンズ Eyepiece lens	1	L		△	
G5	接眼レンズ Eyepiece lens	1	L		△	

部品番号 Part No.	名称 Name	1台個数 Pcs.per Unit	部組品No. Subassembly No.	参照頁 Reference Page	販売区分 Term of Sale	備考 Remarks
G8	集光レンズ Condenser lens	2	N4		△	
G9	レンズ Lens	1	B, B30	16	○△	
G10	レンズ Lens	1	N1	18	○△	
G2-B	フレネルBタイプ Fresnel screen B type				◎	
G2-E	フレネルEタイプ Fresnel screen E type				◎	

部組品一覧表

Subassembly List

35FB-R-3012-A

部組品番号 No. of Sub-assembly	名　称 Name	1台分個数 Pcs. per Unit	構成部品番号 No. of Constituent Parts	参照図番 Reference Fig. No.	備　考 Remarks
A11	下地板 Lower base plate	1	126, 135, 416-1 417-2, 418, 419, 422 423, 425, 426x3, 427 440, 443, 444, 445 446A, 448, 450, 452 457, 487, 488, 496 497x24, 516-1, 517 534, 540Ax2, 819x2 A12	6	
B	前　板 Front plate		6, 19, 20, 36A, 36B 42, 54, 59, 61, 65 201, 202, 208x3 214-1, 214A, 215 214, 217-1, 218, 222 240, 261, 266, 267 291, 291A, 291B 313, 314, 318, 320 321, 328, 329, 330 331, 338, 340, 341 344, 348, 349, 357 361, 375, 383, 394 395, 518A, 519x2 805x4, 806x6, 807 810x2, 811x4, 812x2 813, 818, 819x2, 823 825x2, 828, 834 836x2, 836x2 (工具Tool) 839-1x2, 842 Mx1 842Px4, 858, 862x2 863, 877, 878, 930 934, 935, 936, 937 939, 946, B1, B2, B4 B5, B7, B9-1, B10 B12, B13, B14, B16 B17, B19, B20, B22 B25, B26, B27, B30 B32, B33-1, B24, B35 B37, B38, B39	16 18 22 24	(Black)
B2	セルフ運動レバー Self-timer gear	1	17, 18, 41	18	
B4	絞り連動環 Aperture coupling ring	1	206, 207, 209, 210 211, 223, 893x2	16	
B7	連動コロ Roller lever	1	262, 263, 264, 265 242	20	
B9-1	ミラースイッチ Mirror switch	1	128, 139, 140, 925 926, 927, 928, 931x3 932, 933, 946	20	

部組品番号 No. of Sub-assembly	名称 Name	1台分個数 Pcs. per Unit	構成部品番号 No. of Constituent Parts	参照図番 Reference Fig. No.	備考 Remarks
B11	大レバー Large lever	1	333-1, 335, 369	24	
B12	ミラーアップレバー Mirror-up lever	1	322, 327, 356x2 378, 379, 380, 381	22	
B13	ミラーダウンレバー Mirror-down lever	1	323, 325, 350, 358 359, 372, 375	22	
B16	ストッパー 45° stopper	1	317, 337, 339, 389 391	18	
B17	ミラーレバー軸取付板 Mirror lever shaft base	1	324, 377	22	
B19	レリーズレバー Release lever	1	518, 519A	20	
B22	スクリーン枠 Screen frame	1	243x4, 244x2 245	22	
B24	ミラーチリトリ Mirror holder	1	301, 304, 305 306x4, 307, 308 345, 346, 373x2, G1		
B25	ブラシ連動ギアー Brush coupling gear	1	224, 225, 226, 229 268, 269, 642, 694 827x2	20	
B27	手動絞りレバー Stop-down lever	1	310-1, 311-1	22	
B30	前カバー銘板 Front cover	1	2, 237, G9	16	(Black)
B32	絞り込みレバー Diaphragm set lever	1	309, 311A	22	
B34	巻上側ミラー軸止め板 Mirror shaft stopper, advance-lever side	1	248, 302, 332	22	

部組品番号 No. of Sub-assembly	名称 Name	1台分個数 Pcs. per Unit	構成部品番号 No. of Constituent Parts	参照図番 Reference Fig. No.	備考 Remarks
B35	巻戻側ミラー軸止め板 Mirror shaft stopper, rewind-knob side	1	248, 302, 332	22	
B37	ブレーキ部組 Shutter brake	1	270, 281, 282, 283 284, 285-1, 286-1 287, 334, 343A 352-1, 353, 355-1 362, 363, 367, 368 853, 864x2, B11	24	
B38	ミラーボックス後部遮光板 Mirror box light-shield plate	1	83, 86	20	
B39	プリズムボックス Prism box	1	250, 252A	18	
C	上蓋部 Top cover	1	3, 7, 67, 68, 69, 70 71, 72, 73, 74x3 76, 78, 84, 95, 468 469, 470, 503-1 535A, 535B, 575 577, 639, 873x4 C1, C5, C6	2	(Black)
C1	シュー座モールド Hot-shoe mould	1	66, 75, 77	2	
C5	チェッカーレバー Checker lever	1	643, 637, 638	2	
C6	レディライトプリント板 Ready-light printed circuit	1	94, 109	2	
F		1	641, 671, 672, 676 686, 687, 692, 693 697, 698, 802x2 822x2, 826, 896x2 F2, F3, F4A	12, 14	
F1	ASAダイヤル ASA dial mount	1	667, 677	12, 14	
F2	FRE環 FRE ring	1	588, 678, 679, 680 684	14	
F3	ブラシA Brush A	1	682, 683	14	

部組品番号 No. of Sub-assembly	名称 Name	1台分個数 Pcs. per Unit	構成部品番号 No. of Constituent Parts	参照図番 Reference Fig. No.	備考 Remarks
F4A	ASAダイヤル ASA dial	1	668, 695	12	(Black)
H1	巻戻しレバー Rewind crank	1	654-1, 657, 658	12	
J	FREプリント板 Printed circuit	1	111, 112, 121, 122 123, 124, 130, 133 144, 630, 631, 632 633, 634, 635, 636 685	14	
K	上地板 Upper base plate	1	136, 137, 404A, 405 409, 411, 451, 477 482x2, 483x5, 483A-1 484A-1x2, 485, 490 502-1, 505, 506, 507 508, 509, 512, 514 520, 521, 523, 526 532-1, 533, 812x2 831, 837, K3, K4 K5, K6	4	
K3	MDスイッチ MD switch	1	540B, 540C, 540D 904, 905	4	
K4	スイッチレバー Lever switch	1	478, 484, 486	4	
L	接眼レンズ Eyepiece lens	1	G4, G5	18	
M	ICプリント板 IC printed circuit	1	101, 102, 103, 106 107, 108, 112, 113 114, 115, 116, 117 118, 120, 231, 258x2	18	
N1	ミラー保持基盤 Mirror retaining base plate	1	235, 236, 238, 239 827, 875x2, 943A~C G6x2, G10	18	
N4	接眼モールドメガネ Eyepiece mold	1	254x2, 255, 257, 259 941, 942, G8, L	18	
P3	巻上レバー Wind-up lever	1	401, 401A, 401Bx3 495, 832x2	2	(Black)

部組品番号 No. of Sub-assembly	名称 Name	1台分個数 Pcs. per Unit	構成部品番号 No. of Constituent Parts	参照図番 Reference Fig. No.	備考 Remarks
P4	スイッチ制限 Switch lock lever	1	472, 474, 475	4	
R	管制部 Shutter speed control	1	541, 541A, 541B 541C, 541D, 541E 541F, 570	10	

P33FB

部　品　表

Part List

部品番号 Part No.	名称 Name	1台個数 Pcs.per Unit	部組品No. Subassembly No.	参照頁 Reference Page	販売区分 Term of Sale	備考 Remarks
4	底蓋 Bottom plate	1	D		△	(Black)
8-1	接眼窓 Eyepiece ring	1	C4		△	
8A	接眼ゴム Eyepiece rubber	1	C4		△	
9	接眼ガラス押えバネ Eyepiece glass clip	1	C4		△	(d=0.6)
10	三脚座 Tripod socket	1		28	○	
11	吊環 Eyelet	2	A2		△	
12	耳スプリング Eyelet bush	2	A2		△	32FB #12 32FB1 #12
13	ターミナルキャップ Terminal cap	1		14	◎	32FB #13 32FB1 #15A
15	シンクロソケット Synch socket	1		14	○	
16	セルフ指あて Self-timer lever knob	1	B, B1		△	
16A	セルフ作動レバー Self-timer lever	1	B, B1		△	
21	チャージレバー Charge lever	1	A6		△	
22	チャージレバーピン Charge lever pin	1	A6		△	
23	チャージレバーローラー Charge lever roller	1	A6		△	

部品番号 Part No.	名称 Name	1台個数 Pcs.per Unit	部組品No. Subassembly No.	参照頁 Reference Page	販売区分 Term of Sale	備考 Remarks
24	抜け止め座板 Washer	2	A4 x 1 A6 x 1		Δ	(1.2 x 3 x 0.3)
25-1	MDSW連動レバー Motor switch coupling lever	1		26	○	
26-1	空撮り防止レバー Blank exposure preventer lever	1		26	○	
28-1	MD信号レバー軸 MD signal lever axle	1		26	○	
29	空撮り防止レバー軸カラー Blank exposure preventer lever collar	1		26	○	
30-1	MD信号レバーばね MD signal lever spring	1		26	○	(d=0.29)
31-1	底部押え板 Retaining plate, bottom	1		28	○	
32	シャッターチャージレバー Shutter charge lever	1	A4		Δ	
33	ミラーチャージピン Mirror charge pin	1	A4		Δ	
35	ミラーチャージピンカラー Mirror charge pin collar	1	A4		Δ	
37-1	シャッターチャージ爪 Shutter charge claw	1	A4		Δ	
38	チャージ爪かしめピン Rivet, shutter charge claw	2	A4		Δ	
43	電池ケース Battery chamber	1	A5		Δ	
44	電池キャップ Battery chamber cap	1	P5		Δ	

部品番号 Part No.	名称 Name	1台個数 Pcs.per Unit	部組品No. Subassembly No.	参照頁 Reference Page	販売区分 Term of Sale	備考 Remarks
45-1	電池アース接片 Battery chamber earth contact	1		28	○	
46	電池ホルダー Battery holder	1	P5		△	
47	電池⊕帷片A Battery contact A ⊕	1	A5		△	
48	電池接片かしめ鋲 Battery contact rivet	1	A5		△	
49	電池⊕接片B Battery contact B ⊕	1	A5		△	
50	ローラー Roller	1		32	○	
51	ローラー軸 Roller shaft	1		32	○	
53	前板孔カバー Front plate hole cover	1			○	
54	セルフレバービス Self-timer lever screw	1	B	18, 26	○	(Black)
55	セルフレバー用革 Leatherette	1		18	○	
58-1	溝用モルトプレン Light-tight (for groove)	1		32	○	
58A-1	上溝用モルトA Light-tight A	1		32	○	
58B-1	上溝用モルトB Light-tight B	1		32	○	
59	ミラーボックス下部モルト Mirror box bottom buffer	1	B	20	○△	

部品番号 Part No.	名称 Name	1台個数 Pcs.per Unit	部組品No. Subassembly No.	参照頁 Reference Page	販売区分 Term of Sale	備考 Remarks
60	接眼下部遮光モルト Light-tight (for eyepiece)	1	B	26	○△	
63	シャッター羽根受けゴム Shutter curtain rubber	1		26	○	
64	緩衝ゴムA Shock absorb rubber A	1		28	○	
65	前カバー用段ビス Front cover screw	1	B	16	○△	(Black)
69	押え接点 Upper shoe switch contact	1	C	2	○△	
70	受け接点 Lower shoe switch contact	1	C	2	○△	
71	Dカラー Collar	1	C	2	△	31F3B#573
72	接点座環 Contact washer	1	C	2	△	31F3B#574
73	押　棒 Switch plunger	1	C	2	△	31F3B#575
74	シュー座金 Shoe washer	3	C	2	△	(1.8 x 3 x 0.3) 31F3B#576
82	シャッター上遮光モルト Light-tight, shutter top	1		26	○	
85	シャッターチャージレバー受けゴム Charge lever base rubber	1		28	○	
202	バイヨネット環 Bayonet	1	B	16	○△	
208	バイヨネットばね Bayonet spring	3	B	16	○△	32FB#208 32FB1#208

部品番号 Part No.	名称 Name	1台個数 Pcs.per Unit	部組品No. Subassembly No.	参照頁 Reference Page	販売区分 Term of Sale	備考 Remarks
209	絞り連動片 Aperture coupling piece	1	B, B4		△	32FB1 #209
210	絞り連動片バネ Coupling piece spring	1	B, B4	16	△	
211	絞り連動片軸 Coupling piece shaft	1	B, B4		△	
212	着脱ピン Lens release pin	1	B, B5		△	32FB #212 32FB1 #212
213-1	着脱レバー Lens release lever	1	B, B5		△	
214-1	着脱レバー受 Lens release lever coupling	1	B		△	
214A	着脱レバー押えバネ Lens release lever spring	1	B, B5		△	
215-1	着脱ボタン軸 Lens release button shaft	1	B		△	32FB #215 32FB1 #215
216	着脱ボタンばね Lens release button spring	1	B		△	(d=0.5) 32FB #216 32FB1 #216
217-1	着脱ボタン Lens release button	1	B	20	○△	
218	着脱ボタン軸受 Lens release button sleeve	1	B		△	32FB-#218
223	連動片ばねボタン Coupling piece spring button	1	B, B4	16	○△	32FB1 #229
232	プリズム押えシート Prism retainer	1		18	○	
255	接眼レンズ押え板 Eyepiece retainer	1	N4	18	○△	32FB #255 32FB1 #255

部品番号 Part No.	名称 Name	1台個数 Pcs.per Unit	部組品No. Subassembly No.	参照頁 Reference Page	販売区分 Term of Sale	備考 Remarks
261	レンズ着脱ボタン飾 Lens release button pad	1	B	20	○△	32FB #269 32FB1 #269
281	ブレーキ解除レバー Brake release lever	1	B, B37	24	○△	
285-1	後ブレーキばね基板 Rear brake spring base	1	B, B37		△	
286-1	後ブレーキばね Rear brake spring	1	B, B37		△	
288	ミラーダウン信号レバー Mirror-down signal lever	1	B, B14		△	
289	ミラー係止レバーばね Mirror-holder lever spring	1	B, B14	22	○△	
290	係止レバーばねかけピン Spring retaining pin	1	B, B14		△	
291	係止レバー軸 Latch lever axle	1	B	22	○△	
291A	ミラー調整座金 Washer, mirror-adjusting	2	B		○△	(3 x 5 x 0.05)
291B	ミラー調整座金 Washer, mirror-adjusting	2	B		○△	(3 x 5 x 0.08)
301	ミラーチリトリ Mirror holder	1	B, B26		△	
306	チリトリ駆動板カシメピン Caulking pin	4	B, B26		△	
307	チリトリピンA Mirror holder pin A	1	B, B26		△	
310-1	手動絞りレバー Manual stop-down lever	1	B, B27		△	

部品番号 Part No.	名称 Name	1台個数 Pcs.per Unit	部組品No. Subassembly No.	参照頁 Reference Page	販売区分 Term of Sale	備考 Remarks
312	手動絞りレバーピン Manual stop-down lever pin	1	B, B10		△	
315	絞りレバー Diaphragm actuating lever	1	B, B10		△	
316	絞りレバーばね掛け Diaphragm actuating lever spring mount	1	B, B10		△	
317	45°ストッパー 45° stopper	1	B, B16		△	
320A	チャージレバー軸 Charge lever axle	1		26	○	
324	アップレバー軸筒 Mirror-up lever tube	1	B, B33		△	
325	ダウンレバー軸筒 Mirror-down lever tube	1	B, B13		△	
326	ミラーレバー軸 Mirror lever shaft	1	B, B17		△	
328	シグナルレバー Signal lever	1	B	22	○△	
330	ミラーダウン係止レバー Mirror-down latch lever	1	B	22	○△	
331	ミラーアップ押えレバー軸 Mirror-up stop lever axle	1	B	22	○△	
333-1	大レバー Mirror charge lever	1	B, B11		△	
339	45°ストッパーばね 45° stopper spring	1	B, B16		△	(d=0.32)
340	絞りレバーばね Diaphragm actuating lever spring	1	B	22	△	(d=0.32)

部品番号 Part No.	名称 Name	1台個数 Pcs.per Unit	部組品No. Subassembly No.	参照頁 Reference Page	販売区分 Term of Sale	備考 Remarks
341	ミラーアップばね Mirror-up spring	1	B	22	○△	(d=0.29)
344	レバー押えビス Mirror holder screw	1	B	22	○△	(d=0.23)
345	ミラー押えA Mirror holder A	1	B, B26		△	
346	ミラー押えB Mirror holder B	1	B, B26		△	
352-1	MD巻上げ信号中間レバー MD take-up signal middle lever	1	B, B37		△	
355-1	ブレーキレバー戻しばね Brake lever retaining spring	1	B, B37	24	○△	(3=0.26)
356	調整ピン Adjusting pin	2	B, B12		△	
357	シグナルレバー止めビス Signal lever screw	1	B	22	○△	
358	ダウンレバー連結軸 Down lever connecting shaft	1	B, B13		△	
359	連結軸ブッシュ Connecting shaft bush	1	B, B13		△	
369	ダウンばね掛ピン Spring retaining pin	1	B, B11		△	
372	防振用ゴム Cushion rubber	1	B, B13	22	○△	
373	ミラー押えかしめピン Mirror retainer rivet	1	B, B26		△	
375	ミラー巻上側ワッシャー Washer	1	B, B13		△	(1.9 x 0.8 x 0.2)

部品番号 Part No.	名称 Name	1台個数 Pcs.per Unit	部組品No. Subassembly No.	参照頁 Reference Page	販売区分 Term of Sale	備考 Remarks
376-1	絞りレバーばね掛 Diaphragm actuating lever spring stud	1	B, B33		△	
379	ミラースプリング小 Mirror spring (S)	1	B, B12	22	○△	(d=0.28)
380	ミラースプリング大軸 Mirror spring axle (L)	1	B, B12		△	
381	ミラースプリング小軸 Mirror spring axle (S)	1	B, B12		△	
383	エアーダンパー駆動レバー Air damper lever	1	B	20	○△	
385-1	駆動レバー受ピン Air damper lever pin	1	B, B20		△	
386-1	エアーダンパー連接棒 Air damper connecting shaft	1	B, B20		△	
387	エアーダンパーピストン Air damper piston	1	B, B20		△	
388	エアーダンパーシリンダー Air damper cylinder	1	B, B20		△	
389	45°出しレバー軸 45° adjusting pin	1	B, B16		△	
391	45°出し調整ピン 45° adjusting pin	1	B, B16		△	
392	エアーダンパーシリンダー蓋(A) Air damper cylinder cover (A)	1	B, B20		△	
393-1	エアーダンパーシリンダー蓋(B) Air damper cylinder cover (B)	1	B, B20		△	
394	エアーダンパーホルダー Air damper holder	1	B	20	○△	

部品番号 Part No.	名称 Name	1台個数 Pcs.per Unit	部組品No. Subassembly No.	参照頁 Reference Page	販売区分 Term of Sale	備考 Remarks
395	エアーダンパー駆動レバー止ビス Air damper lever screw	1	B	20	○△	
397	エアーダンパーゴム Air damper rubber	1	B, B20		△	
401	巻上レバー Film-advance lever	1	P3		△	(Black)
401B	ブッシュカシメピン Bush caulking pin	3	P3		△	
402	巻上レバー用皮 Wind-up lever leatherette	1		2	○	
405	レバー軸ナット Lever axle nut	1	K	4	○△	
406	レバー戻しばね Film-advance lever retaining spring	1		2	○	(d=0.35)
408	巻上軸 Film advance shaft	1		4	○	
408A	スプロ制限除板 Sprocket stopper release plate	1		4	○	
409	レバー軸受 Lever shaft bearing	1			△	
411	クリックレバー Click lever	1	K		△	
412	三羽根爪押えばね Charge cam claw retaining spring	3	A18	6	○△	(d=0.2)
412B	三羽根爪軸 Charge cam claw shaft	6	A18		△	
413	巻上げカム Film advance cam	1		6	○	

部品番号 Part No.	名称 Name	1台個数 Pcs.per Unit	部組品No. Subassembly No.	参照頁 Reference Page	販売区分 Term of Sale	備考 Remarks
414	三羽根爪 Charge cam claw	3	A18		Δ	
415	巻上ギア Advance gear A	1	A18		Δ	
416-1	アイドルギアA Idle gear A	1	A11		Δ	
417-2	アイドルギアB Idle gear B	1	A11		Δ	
418	アイドルギアC Idle gear C	1	A11		Δ	
419	アイドルギアC軸 Idle gear C shaft	1	A11		Δ	
420-1	スプール上ギア Spool top gear	1	A7		Δ	
421	スプール上ギアナット Spool top gear nut	1	A7		Δ	32FB #429A 32FB1 #429A
422	巻上軸受ケース Film advance bearing case	1	A11		Δ	
423	ボール保持筒 Steel ball holding tube	1	A14 x 1 A11 x 1		Δ	
424-1	スプールギア内筒 Spool gear inner tube	1	A7		Δ	
425	アイドルギア軸受ケース Idle gear bearing case	1	A11		Δ	
426	軸受ケースカシメピン Bearing case caulking pin	3	A11		Δ	
427	アイドルギアAワッシャー Idle gear A washer	1	A11		Δ	(3.5 x 5.8 x 0.5)

部品番号 Part No.	名称 Name	1台個数 Pcs.per Unit	部組品No. Subassembly No.	参照頁 Reference Page	販売区分 Term of Sale	備考 Remarks
429	スプロケット制限カム Sprocket stopper cam	1		8	○	
431	スプロ上ギア Sprocket upper gear	1		8	○	
432	スプロケット軸受 Sprocket shaft bearing	1		8	○	
433	スプロケットカラー Sprocket collar	1		8	○	
434	スプロケット軸 Sprocket shaft	1		8	○	
435	スプロケットビス Sprocket screw	1		8	○	
435A	スプロケットビスA Sprocket screw A	1		8	○	
436-1	スプロケットローラーA Sprocket roller A	1		8	○	
437	スプロカラーAナット Sprocket collar A nut	1		8	○	
438	スプロ軸受 Sprocket shaft bearing	1		8	○	
439	巻戻釦 Rewind button	1	D	28	○△	
440	逆転止爪軸 Anti-reversing claw shaft	1	A11		△	
441	三羽根爪外しレバー軸 Charge cam claw release lever axle	1		26	○	
443	逆転止爪A Anti-reversing claw A	1	A11		△	

部品番号 Part No.	名称 Name	1台個数 Pcs.per Unit	部組品No. Subassembly No.	参照頁 Reference Page	販売区分 Term of Sale	備考 Remarks
444	逆転止爪B Anti-reversing claw B	1	A11		△	
445	逆転防止爪バネ Anti-reversing claw spring	1	A11		△	
446A	逆転防止爪ばねカシメピン Caulking pin	2	A11		△	
447	スプロストッパー Sprocket stopper	1	A12		△	
448	スプロストッパー軸 Sprocket stopper axle	1	A11		△	
449	ストッパーブッシュー Sprocket stopper bush	1	A12		△	
450	スプロストッパー戻しばね Sprocket stopper returning spring	1	A11	6	○△	(d=0.3)
452	下地板 Lower base plate	1	A11		△	
453	スプール軸 Spool shaft	1	A9		△	
454	スプール軸受ケース Spool shaft bearing shaft	1	A14		△	
455	スプール内筒 Spool inner tube	1	A8		△	32FB #429A 32FB1 #429A
455A	スプール座金 Spool washer	1	A8		△	32FB #436-2 32FB1 #436-2
456-1	フリクション板 Friction plate	1	A7		△	
456A	フリクションばね Friction spring	1	A7		△	(d=0.8)

部品番号 Part No.	名称 Name	1台個数 Pcs.per Unit	部組品No. Subassembly No.	参照頁 Reference Page	販売区分 Term of Sale	備考 Remarks
456B	ばね受け皿 Spring tray	1	A7		△	32FB #499 32FB1 #499
456C	ばね押え筒 Spring retaining tube	1	A9		△	32FB #499 32FB1 #499
457	ボールケース Ball case	2	A14 A11 x 1		△	
458	セットカムピン Set cam pin	1	A10		△	
459-1	セットカム Set cam	1	A10		△	
460	セットカムカラー Set cam collar	1		8	○	32FB #491-1 32FB1 #491-1
461	カップリング支柱 Coupling strut	1	A10		△	
462	振り子 Pendulum	1		28	○	
464	ロックレバー Lock lever	1		28	○	
465	ロックレバーばね Lock lever spring	1		28	○	(d=0.26)
467-1	ゆるみ止めカラー Collar	1		8	○	(1.8 x 5 x 0.6)
470	レリーズ内筒 Release inner tube	1	C	2	○△	
473	スイッチ制限軸 MD switch stopper axle	1		4	○	
477	スイッチ制限ストッパー Switch stopper	1	K		△	

部品番号 Part No.	名称 Name	1台個数 Pcs.per Unit	部組品No. Subassembly No.	参照頁 Reference Page	販売区分 Term of Sale	備考 Remarks
482	巻上制限ピン Film advance stopper pin	2	K		△	
483	クリックレバーばね Click lever spring	5	K	4	○△	
483A-1	クリックレバーばね座板 Click lever spring washer	1	K		△	
484A-1	座板カシメピン Caulking pin	2	K		△	
485	スイッチレバーカラー Lever switch collar	1	K		△	
487	主スイッチ切片A Lever switch contact A	1	A11	6	○△	
488	主スイッチ切片B Lever switch contact B	1	A11	6	○△	
489	三羽根爪外レバー Charge cam claw release lever	1		26	○	
495	指あて Wind-up lever knob	1	P3	2	○△	32FB #416 32FB1 #416
496	スプロ制限板ばね Sprocket stopper spring	1	A11	6	○△	
497	鋼　球 Steel ball	48	A11x28 A7x16 A14x8		○△	32FB #497 32FB1 #493
498	スプロケットばね Sprocket spring	1		8	○	(d=0.35) 32FB #498 32FB1 #444
499-1	スプロケット軸カラーB Sprocket shaft collar B	1		8	○	
502-1	枚数計 Frame-counter dial	1	K	4	○△	

部品番号 Part No.	名称 Name	1台個数 Pcs.per Unit	部組品No. Subassembly No.	参照頁 Reference Page	販売区分 Term of Sale	備考 Remarks
505	カウンターバネ Counter spring	1	K	4	○△	(d=0.26)
506	止爪 Ratchet claw	1	K	4	○△	
507	止爪ナット Ratchet claw nut	1	K		△	
508	止爪カラー Ratchet claw collar	1	K		△	
509	クリックレバー軸 Click lever axle	1	K		△	
510-1	送り爪 Advance claw	1	K, K5		△	
511-1	送り爪レバー Advance claw lever	1	K, K5		△	
512	送り爪レバー軸 Advance claw lever axle	1	K	4	△	
513-1	送り爪軸 Advance claw axle	1	K, K5		△	
514	送り爪レバー軸カラー Advance claw lever axle collar	1	K		△	
515-1	ばね掛けピン Spring retaining pin	1	K, K5		△	
516-1	カウンター送り偏心軸 Counter advance eccentric shaft	1	A11		△	
517	偏心軸軸受 Eccentric shaft bearing	1	A11		△	
520	零戻しばねワッシャー Resetting spring washer	1	K		△	(1.5 x 5.2 x 0.2)

部品番号 Part No.	名称 Name	1台個数 Pcs.per Unit	部組品No. Subassembly No.	参照頁 Reference Page	販売区分 Term of Sale	備考 Remarks
521	零戻しばね Resetting spring	1	K	4	○△	(d=0.26)
522	零戻しレバー Counter reset lever	1	K, K6		△	
523	零戻しレバー軸 Counter reset lever axle	1	K	4	○△	
524	爪外しピン Claw release pin	1	K, K6		△	
526	クリックレバーあおり止め Click lever stopper	1	K		△	
527A	レリーズ軸補助 Release shaft supporter	1		26	○	
527B-1	レリーズ釘補助ばね Spring	1		26	○	(d=0.12)
528	スプール Spool	1	A8		△	
529	スプール軸バネ Spool shaft spring	1	A9		△	(d=0.4)
530	ラチェットカム Ratchet cam	1	A10		△	
531	スプロケット Sprocket	1		8	○	
532-1	ラチェット Ratchet	1	K	4	○△	
533	指標板 Frame-counter index	1	K	4	○△	
534	スイッチ押え板 MD switch cover	2	A11 x 1	6	○△	

部品番号 Part No.	名称 Name	1台個数 Pcs.per Unit	部組品No. Subassembly No.	参照頁 Reference Page	販売区分 Term of Sale	備考 Remarks
535A	レリーズ釦 Release button	1	C	2	○△	32FB #459-2 32FB1 #459-2
535B	レリーズガイドビス Release guide screw	1	C	2	○△	32FB #461A 32FB1 #461A
536	レリーズ軸ばね Release shaft spring	1		26	○	(d=0.35)
537	ＡＲレバー AR lever	1		28	○	32FB #479-1 32FB1 #479-1
537A	ＡＲレバー軸 AR lever axle	1		28	○	32FB #480 32FB1 #480
537B	ＡＲレバーばね AR lever spring	1		28	○	(d=0.18) 32FB #481 32FB1 #481
538	振り子偏心軸 Pendulum eccentric axle	1		28	○	
538A	振り子ばね Pendulum spring	1		28	○	(d=0.16) 32FB #484 32FB1 #484
539	ロックレバー軸 Lock lever axle	1		28	○	32FB #487 32FB1 #487
540	Ｒ釦スリーブ Rewind button sleeve	1	D		△	
540A	ＭＤスイッチ絶縁板Ａ MD switch insulation plate C	2	A11 x 2	6	○△	
656	レバー受バネ Rewind crank spring	1		12	○	
661-1	巻戻しレバー軸 Rewind crank shaft	1			○	
666-1	巻戻しレバー軸 Rewind crank shaft	1		12	○	32FB #609 32FB1 #609

部品番号 Part No.	名称 Name	1台個数 Pcs.per Unit	部組品No. Subassembly No.	参照頁 Reference Page	販売区分 Term of Sale	備考 Remarks
680	FRE FRE	1	F2		△	30FD16 #153
701	裏蓋 Camera back	1	E1		△	
702-2	圧板 Pressure plate	1	E2		△	
703	圧板ばね Spring	1	E2		△	32FB #703 32FB1 #703
704-2	圧板鋲 Rivet	2	E2		△	
705	圧板ばね支え鋲 Pressure plate spring stud	4	E1		△	
707	止め爪A Latch A	1	E1		△	32FB #707 32FB1 #707
709	止め爪カバー Latch cover	1		32	○	
710	蝶番芯金A Hinge shaft	1	E1		△	
711	止め爪用鋲 Latch rivet	2	E1		△	
712	パトローネ押えカシメピン Rivet	3	E1		△	
714	止め爪ばね Latch spring	1		32	○	32FB #714 32FB1 #714
715	パトローネ押え Cartridge press spring	1	E1		△	
716	ローラ受け板 Roller bracket	1	E1		△	

部品番号 Part No.	名称 Name	1台個数 Pcs.per Unit	部組品No. Subassembly No.	参照頁 Reference Page	販売区分 Term of Sale	備考 Remarks
717	ローラ受け板鋲 Roller bracket rivet	4	E1		△	
718	ローラー Roller	1	E1		△	
719	裏蓋遮光板 Camera back light baffle	1	E1		△	32FB #719 32FB1 #719
720	裏蓋蝶番B Camera back hinge B	1	E1		△	
721	裏蓋蝶番カシメピン Camera back hinge rivet	7	E1		△	
722	蝶番芯金B Hinge shaft B	1	E1	30	○△	
723-1	メモホルダー枠 Memo holder frame	1	E1		△	
725	裏蓋用貼皮 Back cover leatherette	1	E1	30	○△	
726	遮光モルトA Light-tight A	1	E1	30	○△	
727	遮光モルトB Light-tight B	1	E1	30	○△	
728	遮光モルトC Light-tight C	1	E1	30	○△	
730	遮光別珍B Light-baffle cloth B	2	E1	30	○△	
731	裏蓋着脱ピン Camera back release pin	1	E1	30	○△	
732	裏蓋着脱ばね Camera back release spring	1	E1	30	○△	(d=0.26) 30FB #629

部品番号 Part No.	名称 Name	1台個数 Pcs.per Unit	部組品No. Subassembly No.	参照頁 Reference Page	販売区分 Term of Sale	備考 Remarks
801	小ねじ JCIS ⊕ PM 2 x 3 Type (3) Screw	3		28	○	32FB #801 32FB1 #801
802	小ねじ JCIS ⊕ PM 2 x 7 Type (1) Screw	1	F	26	○△	
803	小ねじ JCIS ⊕ PM 1.7 x 3 Type (1) Screw	5		2	○	(Black) 32FB #803 32FB1 #803
804A	小ねじ JCIS ⊕ CM 1.7 x 2.5 Type (1) Screw	6			○	(Black) 32FB #804A 32FB1 #804A
804B	小ねじ JCIS ⊕ CM 1.7 x 2.5 Type (1) Screw	3		32	○	
805	バイヨネット止ビス Bayonet set screw	4	B	16	○△	32FB #805
806	小ねじ JCIS ⊕ PM 1.7 x 1.8 Type (1) Screw	7	B	16, 28	○△	32FB #806 32FB1 #806
810	前板取付ビス Front plate screw	8		18, 28	○	32FB #810 32FB1 #810
811	バイヨネット台ビス Bayonet mount screw	4	B	16	○△	32FB #811 32FB1 #811
812	小ねじ JCIS ⊕ PM 1.7 x 2.2 Type (1) Screw	4	B x 2 K x 2	4, 20	○△	32FB #878 32FB1 #878
813	前カバービス Front cover screw	1	B	16	○△	(Black)
815	巻上軸ビス Film-advance shaft screw (left-handed)	2		6, 8	○	32FB #815 32FB1 #815
817	小ねじ JCIS ⊕ PM 2 x 5 Type (3) Screw	2		18	○	
819	小ねじ JCIS ⊕ PM 1.4 x 3 Type (3) Screw	4		6, 16	○△	32FB #819 32FB1 #819

部品番号 Part No.	名称 Name	1台個数 Pcs.per Unit	部組品No. Subassembly No.	参照頁 Reference Page	販売区分 Term of Sale	備考 Remarks
820	カップリングビス Coupling screw	1		8	○	32FB #932 32FB1 #932
821	小ねじ JCIS ⊕ PM 2 x 4 Type (3) Screw	2		28	○	
822	ＡＳＡ目盛貼付環制限 ASA-dial base dish stopper	2	F	12	○△	32FB1 #892
823A	ミラーレバー軸調整用座金 Washer	1	B	22	○△	(3.6 x 6.5 x 0.05)
823B	ミラーレバー軸調整用座金 Washer	1	B	22	○△	(3.6 x 6.5 x 0.1)
823C	ミラーレバー軸調整用座金 Washer	1	B	22	○△	(3.6 x 6.5 x 0.15)
823D	ミラーレバー軸調整用座金 Washer	1	B	22	○△	(3.6 x 6.5 x 0.2)
824	ギヤセットビス Gear set screw	7	A7 x 3	8	○△	32FB #824 32FB1 #824
825	小ねじ JCIS ⊕ PM 2 x 2.5 Type (1) Screw	6	B x 2	8, 20 28	○△	
825A	小ねじ JCIS ⊕ PM 2 x 2.5 Type (1) Screw	1	B x 2		○△	
829	タッピンネジ Tapping screw	1		18	○	
830	小ねじ JCIS ⊕ PM 1.4 x 2 Type (3) Screw	2		18	○	
831	小ねじ JCIS ⊕ CM 1.4 x 4 Type (1) Screw	1	K	4	○△	
832	小ねじ JCIS ⊕ PM 2 x 4.5 Type (1) Screw	2	P3	2	○△	32FB #832-1 32FB1 #832-1

部品番号 Part No.	名称 Name	1台個数 Pcs.per Unit	部組品No. Subassembly No.	参照頁 Reference Page	販売区分 Term of Sale	備考 Remarks
833-1	ゆるみ止めビス Set screw	1		8, 28	○	
835	下地板取付ビスB Lower base plate screw B	3		6	○	
840	シャッター取付ネジB Shutter attaching screw B	2		26	○	32FB #840 32FB1 #840
841	レリーズ軸用Eリング Release shaft E ring	1		26	○	31F3B #836
842A	調整用座金 Washer	6	B	18	○△	(2.1 x 3.8 x 0.05) 32FB #842A
842B	調整用座金 Washer	6	B	18	○△	(2.1 x 3.8 x 0.06) 32FB #842B
842C	調整用座金 Washer	6	B	18	○△	(2.1 x 3.8 x 0.07) 32FB #842C
842D	調整用座金 Washer	6	B	18	○△	(2.1 x 3.8 x 0.08) 32FB #842D
842E	調整用座金 Washer	6	B	18	○△	(2.1 x 3.8 x 0.09) 32FB #842E
842F	調整用座金 Washer	6	B	18	○△	(2.1 x 3.8 x 0.1) 32FB #842F
842G	調整用座金 Washer	6	B	18	○△	(2.1 x 3.8 x 0.11) 32FB #842G
842H	調整用座金 Washer	6	B	18	○△	(2.1 x 3.8 x 0.12) 32FB #842H
842I	調整用座金 Washer	6	B	18	○△	(2.1 x 3.8 x 0.2) 32FB #842I
842J	調整用座金 Washer	6	B	18	○△	(2.1 x 3.8 x 0.3) 32FB #842J

部品番号 Part No.	名称 Name	1台個数 Pcs.per Unit	部組品No. Subassembly No.	参照頁 Reference Page	販売区分 Term of Sale	備考 Remarks
842K	調整用座金 Washer	6	B	18	○△	(2.1 x 3.8 x 0.4) 32FB #842K
842M	調整用座金 Washer	6	B	18, 20	○△	(2.1 x 3.8 x 0.5) 32FB #842M
842N	調整用座金 Washer	6	B	18	○△	(2.1 x 3.8 x 0.6) 32FB #842N
842P	調整用座金 Washer	6	B	18	○△	(2.1 x 3.8 x 0.7) 32FB #842P
842Q	調整用座金 Washer	6	B	18	○△	(2.1 x 3.8 x 0.8) 32FB #842Q
842R	調整用座金 Washer	6	B	18	○△	(2.1 x 3.8 x 0.9) 32FB #842R
842S	調整用座金 Washer	6	B	18	○△	(2.1 x 3.8 x 1.0)
842T	調整用座金 Washer	6	B	18	○△	(2.1 x 3.8 x 1.1)
842U	調整用座金 Washer	6	B	18	○△	(2.1 x 3.8 x 1.2)
842V	調整用座金 Washer	6	B	18	○△	(2.1 x 3.8 x 0.03)
843	スプロケットばね受座金 Washer	1		8	○	(3.2 x 5.5 x 0.5) 32FB #843 32FB1 #843
845	小ねじ JCIS ⊕ PM 2 x 3 Type (1) Screw	5		4, 28	○	32FB #845 32FB1 #845
848	吊環ビス Eyelet set screw	2		26	○	32FB #848 32FB1 #848
850-1	エアーダンパーピストンピン Air damper piston pin	1	B, B20	20	○△	

部品番号 Part No.	名称 Name	1台個数 Pcs.per Unit	部組品No. Subassembly No.	参照頁 Reference Page	販売区分 Term of Sale	備考 Remarks
855	小ねじ JCIS ⊕ PM 1.7 x 2.5 Type (3) Screw	2		26	○	32FB #855 32FB1 #855
856	多重ツマミ用Eリング E-ring	4	B, B20	20	○	(E-10) 32FB #856 32FB1 #856
857	大レバー座金 Washer	1		26	○	(2.1 x 5.5 x 0.5)
858	ミラーボックス座板 Mirror box washer	1	B	22	○△	(2.2 x 5 x 0.2) 32FB #858 32FB1 #858
871	小ねじ JCIS ⊕ CM 2 x 4.5 Type (3) Screw	1		28	○	
875	小ミラー調整ビス Aperture readout reflex mirror screw	2	N1	18	○△	
878	ダウン係止レバーストッパ Down-stopper lever stopper	1	B	22	△	
879	レリーズレバーガイド軸 Release lever guide pin	1		26	○	
882	小ねじ JCIS ⊕ CM 1.7 x 3 Type (1) Screw	2		32	○	32FB #882 32FB1 #882
883	Rボタン用Eリング Rewind button E-ring	1	D		○△	32FB #883 32FB1 #883 (E-17)
887	スプロケット左ねじ Sprocket screw (left handed)	1		8	○	
888	スプロストッパービス Sprocket stopper screw	1	A11	6	○△	
889	三角環 Neck-strap ring	2		26	○	
890-1	三角環保護カバー Neck-strap ring cover	2		26	○	

部品番号 Part No.	名称 Name	1台個数 Pcs.per Unit	部組品No. Subassembly No.	参照頁 Reference Page	販売区分 Term of Sale	備考 Remarks
893	絞り連動片バネビス Aperture coupling piece screw	2	B, B4	16	○△	
897A	巻上ギアワッシャー Washer	1		6	○	(9.5 x 6.5 x 0.05)
897B	巻上ギアワッシャー Washer	1		6	○	(9.5 x 6.5 x 0.1)
897C	巻上ギアワッシャー Washer	1		6	○	(9.5 x 6.5 x 0.2)
906-1	MD巻上スイッチA MD take-up switch A	1	A5		△	
907-1	MD巻上スイッチB MD take-up switch B	1	A5		△	
910	MD軸受 MD shaft bearing	1		28	○	
911	MD軸 MD shaft	1		28	○	
912	MDシーソーレバー MD see-saw lever	1		28	○	
913	レリーズ連結ネジ Release shaft connecting screw	1			○	
914	MDシーソーレバー軸 See-saw lever axle	1		28	○	
916	MD外部接点受け MD electrical contact socket	1	A17		△	
918	外部接点 MD external contact pin	4	A17		△	
919	外部接点ラグ板 MD external contact lug	4	A17		△	

部品番号 Part No.	名称 Name	1台個数 Pcs.per Unit	部組品No. Subassembly No.	参照頁 Reference Page	販売区分 Term of Sale	備考 Remarks
922	カップリング飾り環 Coupling cover ring	1	D		△	
923	モーターカップリング Motor coupling	1		8	○	
924	絶縁シート Insulating seat	1		28	○	
G1	ミラー Mirror	1	B, B26		○△	
G3	プリズム Prism	1		18	○	
G6	反射ミラー Aperture readout reflex mirror	2	N1	18	○△	
G7	接眼ガラス Eyepiece glass	1	C4		△	

部組品一覧表
Subassembly List

P33FB-R-3012-A

部組品番号 No. of Sub-assembly	名称 Name	1台分個数 Pcs. per Unit	構成部品番号 No. of Constituent Parts	参照図番 Reference Fig. No.	備考 Remarks
A2	耳環 Eyelet	2	11, 12	26	
A4	シャッターチャージレバー Shutter charge lever	1	24, 32, 33, 35, 37-1 38x2	8	
A5	電池ケース Battery chamber	1	43, 47, 48, 49, 906-1 907-1	26	
A6	チャージレバー Charge lever	1	21, 22, 23, 24	26	
A7	スプール上ギヤー Spool upper gear	1	420-1, 421, 424-1 456-1, 456A, 454B 497x16 824x3	8	
A8	スプール Spool	1	455, 455A, 528	8	
A9	スプール軸 Spool shaft	1	453, 456C, 529	6, 8	
A10	セットカム Set cam	1	458, 459-1, 461 530	8	
A12	スプロストッパー Sprocket stopper	1	447, 449	6	
A14	スプール軸受ケース Spool shaft bearing cause	1	423, 454, 497x8	8	
A17	MD外部接点 MD electrical contact	1	916, 918x4, 919x4	28	
A18	巻上ギヤー Wind-up gear	1	412x3, 412Bx6, 414x3, 415	6	
B1	セルフ作動レバー Self-timer lever	1	16, 16A	18	

部組品番号 No. of Sub-assembly	名称 Name	1台分個数 Pcs. per Unit	構成部品番号 No. of Constituent Parts	参照頁 Reference Fig. No.	備考 Remarks
B5	着脱レバー Lens release lever	1	212, 213-1, 214A	16	
B10	絞りレバー Diaphragm actuating lever	1	312, 315, 316	22	
B14	ミラーダウン信号レバー Mirror-down signal lever	1	288, 289, 290	22	
B20	エアーダンパー部 Air damper	1	385-1, 386-1, 387 388, 392, 393-1 397, 850-1, 856	20	
B33-1	絞りレバーバネ掛け Diaphragm spring stud	1	324, 376-1	22	
C4	接眼窓 Eyepiece ring	1	8-1, 8A, 9, G7	2	◎
D	底蓋 Bottom plate	1	4, 439, 540, 883 922	28	(Black)
E1	裏蓋 Camera back	1	701x1, 705x4, 707 710, 711x2, 712x3 715, 716, 717x2 718, 719, 720 721x7, 722, 723-1 725, 726, 727, 728 730x2, 731, 732	30	
E2	圧板 Pressure plate	1	702, 703, 704-2x2	30	
K5	送りFVレバー Advance lever	1	510-1, 511-1, 513-1 515-1	4	
K6	零戻レバー Counter release lever	1	522, 524	4	
P5	電池キャップ Battery chamber cap	1	44, 46	28	

黒部品一覧表

List of black-finished parts

35FB		P33FB	
部番 Part No.	名称 Name	部番 Part No.	名称 Name
2	前カバー銘板 Front cover (Name plate)	4	底蓋 Bottom plate
3	上カバー Top cover	54	セルフレバービス Self-timer lever screw
7	接眼窓受 Eyepiece mount	65	前カバー用段ビス Front cover screw
68	シューバネ Shoe contact	401	巻上レバー Film-advance lever
207	絞り連動環 Aperture coupling ring	803	小ねじ JCIS ⊕ PM 2 x 7 Type (1) Screw
403	レバー押えねじ Wind-up lever screw	804A	小ねじ JCIS + CM 1.7 x 2.5 Type (1) Screw
575	飾り環 Cover ring	813	前カバービス Front cover screw
668	ASAダイヤル ASA dial		
B30	前カバー銘板 Front cover	D	底板 Bottom plate
C	上蓋部 Top cover		
F4	ASAダイヤル ASA dial		
P3	巻上レバー Wind-up lever		

黒部品一覧表

List of black-finished parts

35FB		P33FB	
部番 Part No.	名称 Name	部番 Part No.	名称 Name
2	前カバー銘板 Front cover (Name plate)	4	底蓋 Bottom plate
3	上カバー Top cover	54	セルフレバービス Self-timer lever screw
7	接眼窓受 Eyepiece mount	65	前カバー用段ビス Front cover screw
68	シューバネ Shoe contact	401	巻上レバー Film-advance lever
207	絞り連動環 Aperture coupling ring	803	小ねじ JCIS ⊕ PM 2 x 7 Type (1) Screw
403	レバー押えねじ Wind-up lever screw	804A	小ねじ JCIS + CM 1.7 x 2.5 Type (1) Screw
575	飾り環 Cover ring	813	前カバービス Front cover screw
668	ASAダイヤル ASA dial		
B30	前カバー銘板 Front cover	D	底板 Bottom plate
C	上蓋部 Top cover		
F4	ASAダイヤル ASA dial		
P3	巻上レバー Wind-up lever		

Section III. Explosion Drawing

Content

Note: 1) Parts in the explosion drawings are shown in the facing page as 35FB parts or as P33FB parts.
2) Be sure to fill the part order form, respectively for 35FB parts and for P33FB parts.
3) Parts in the Part List of this section are avaliable as indiviaul parts or as assembly.

How to use explosion drawings:

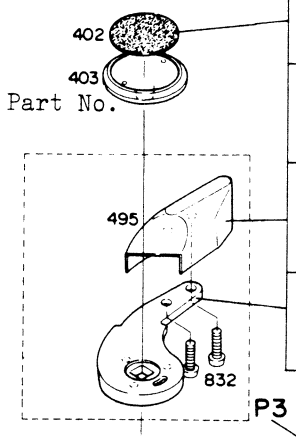

Part Classification	Term of Supply	Mark
Part with Part No., shown outside the broken line	Available as individual part	○
Part without Part No, shown outside the broken line	Not available as repair part	×
Part with Part No., shown inside the broken line	Available as assembly or individually	○△
Part without Part No, shown inside the broken line	Available only as assembly	△

Assembly No.(component parts shown inside the broken line)

総 展 開 図　Drawing of Complete Camera Section

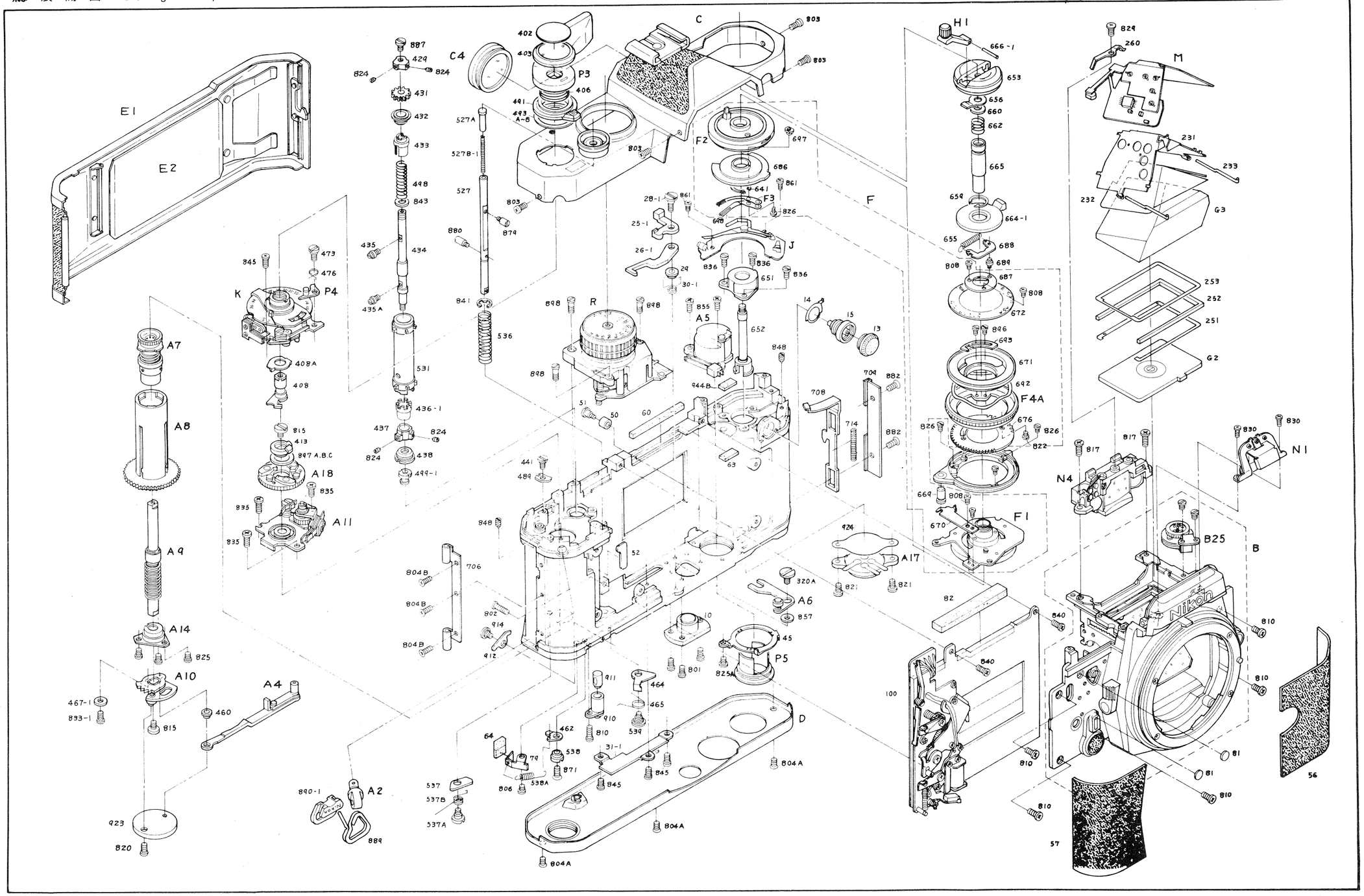

上カバー　Top Cover

35FB-R.3012.A

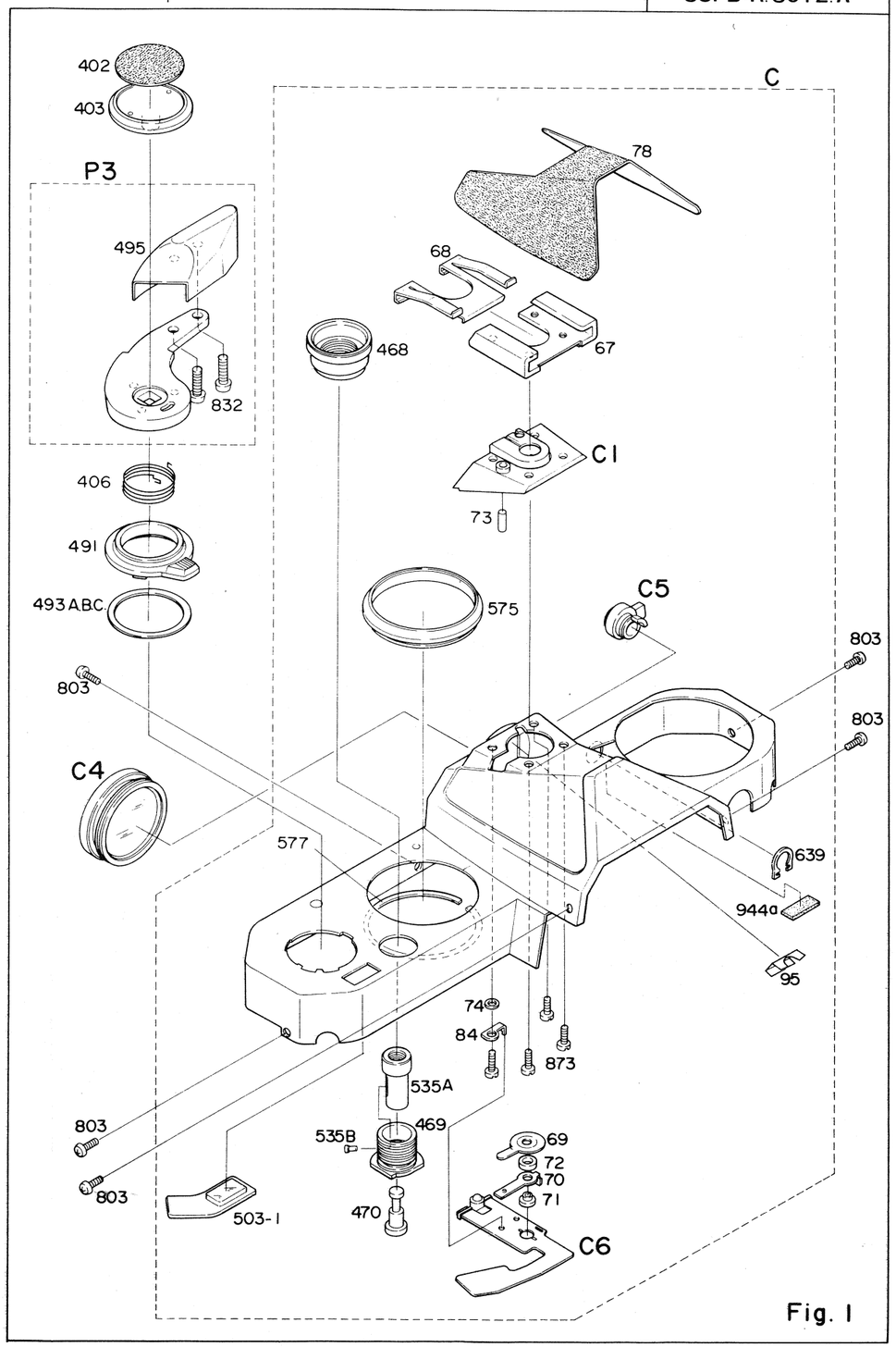

Fig. 1

部品番号 Part No.	名称 Name	備考 Remarks	部品番号 Part No.	名称 Name	備考 Remarks
35FB 67	H シュー Hot-shoe contact		35FB P3	巻上レバー Wind-up lever	(Black)
68	シューバネ Shoe spring	(Black)			
78	ペンタ革 Penta cover leatherette		**P33FB**		
84	アースラグ板 Earth lug plate		P33FB 69	押え接点 Upper shoe switch contact	
95	LED 遮光板 LED light baffle		70	受け接点 Lower shoe switch contact	
403	レバー押えねじ Wind-up lever screw	(Black)	71	D カラー Collar	
468	レリーズ釦飾り環 Release button ring		72	接点座環 Contact washer	
469	かぶせレリーズ環 Release ring		73	押 棒 Switch plunger	
491	多重撮りツマミ Multi-exposure knob		74	シュー座金 Shoe washer	
493A B, C	多重撮りシート Multi-exposure sheet, A,B,C		402	巻上レバー用皮 Wind-up lever leatherette	
503-1	枚数計窓 Frame-counter window		406	レバー戻しバネ Film-advance lever returning spring	
575	飾り環 Cover ring	(Black)	470	レリーズ内筒 Release inner tube	
577	飾り環座金 Cover ring washer		495	指あて Wind-up lever knob	
639	止め輪 Snap ring		535A	レリーズ釦 Release button	
873	シュービス (短) Hot-shoe		535B	レリーズガイドビス Release guide screw	
944A	Jプリント板ゴム J print rubber		803	カバービス JCIS ⊕ PM 1.7x3 Type(1) Screw	(Black)
			832	小ねじ JCIS ⊕ PM 2x4.5 Type(1) Screw	
C	上蓋部 Top cover	(Black)			
C1	シュー座モールド Hot-shoe mould		C4	接眼窓 Eyepiece ring	
C6	レディライトプリント板 Ready-light printed circuit				

上地板 Upper Base Plate

35FB-R.3012.A

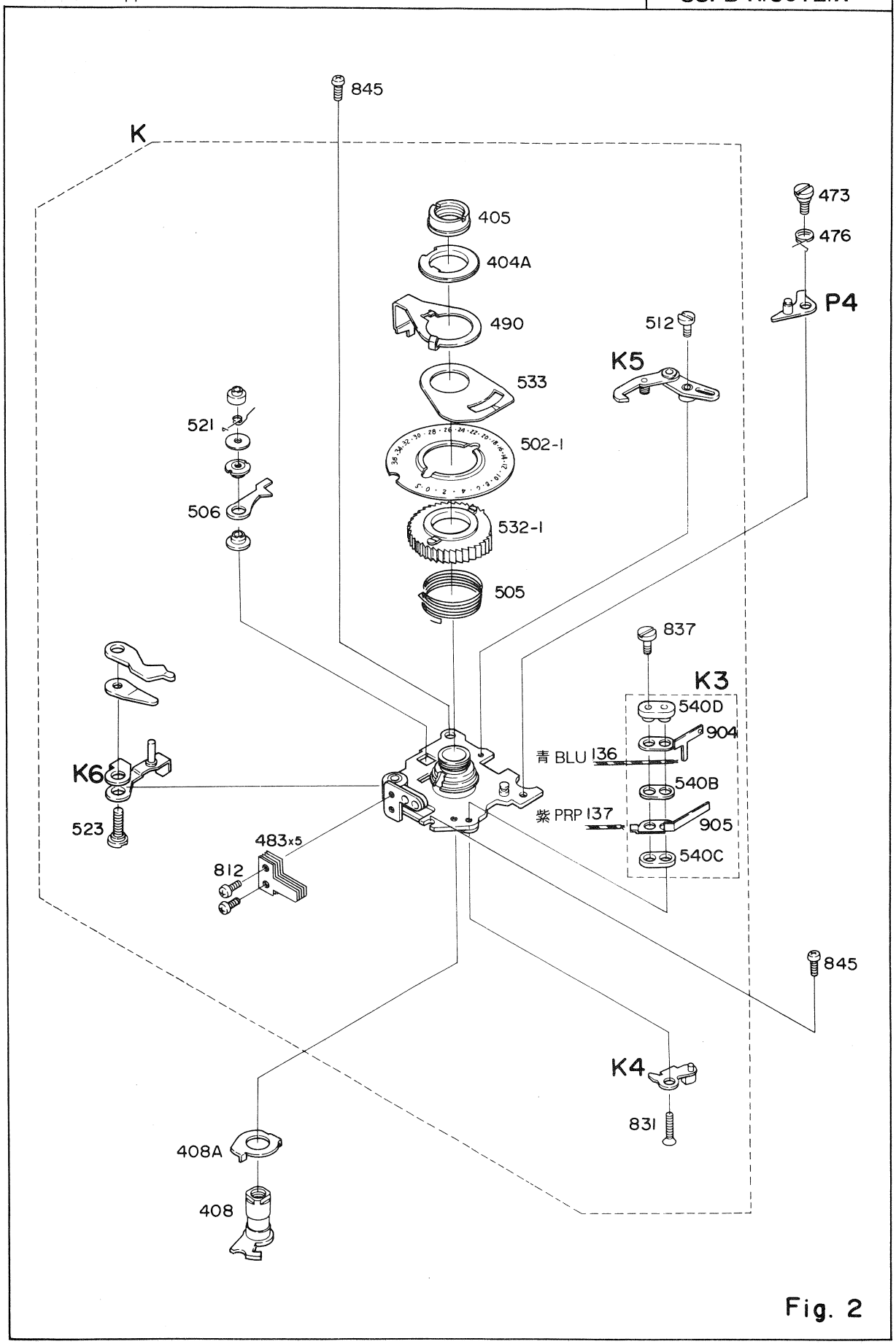

Fig. 2

部品番号 Part No.	名称 Name	備考 Remarks
35FB 136	MD スイッチコード Lead wire, MD switch	
137	後幕シグナルコード B Lead wire B, second curtain signal	
404A	枚数計押え板 Counter retaining ring	
476	スイッチ制限バネ Switch stopper spring	
490	多重撮り連結レバー Multi-exposure lever	
540B C, D	MD スイッチ絶縁板B, C, D MD switch insulation Plate B, C, D	
837	MD スイッチ取付ビス MD switch screw	
904	MD スイッチ接片 A MD switch contact A	
905	MD スイッチ接片 B MD switch contact B	
K	上地板 Upper base plate	
K3	MD スイッチ MD switch	
K4	スイッチレバー Lever switch	
P4	スイッチ制限 Switch lock lever	

部品番号 Part No.	名称 Name	備考 Remarks
	P33FB	
P33FB 405	レバー軸ナット Lever axle nut	
408	巻上軸 Film advance shaft	
408A	スプロ制限除板 Sprocket stopper release plate	
473	スイッチ制限軸 MD swith stopper axle	
483	クリックレバーバネ Click lever spring	
502-1	枚数計 Frame-counter dial	
505	カウンターバネ Counter spring	
506	止爪 Ratchet claw	
512	送り爪レバー軸 Advance claw lever axle	
521	零戻しバネ Resetting spring	
523	零戻しレバー軸 Counter reset lever axle	
532-1	ラチエット Ratchet	
533	指標板 Frame-counter index	
812	小ねじ JCIS⊕ PM 1.7x2.2 Type(1) Screw	
831	MD スイッチビス JCIS⊕ CM 1.4x4 Screw	
845	巻戻し軸受けビス JCIS⊕ PM 2x3 Type(1) Screw	
K5	送り爪レバー Advance lever	
K6	零戻しレバー Counter reverse lever	

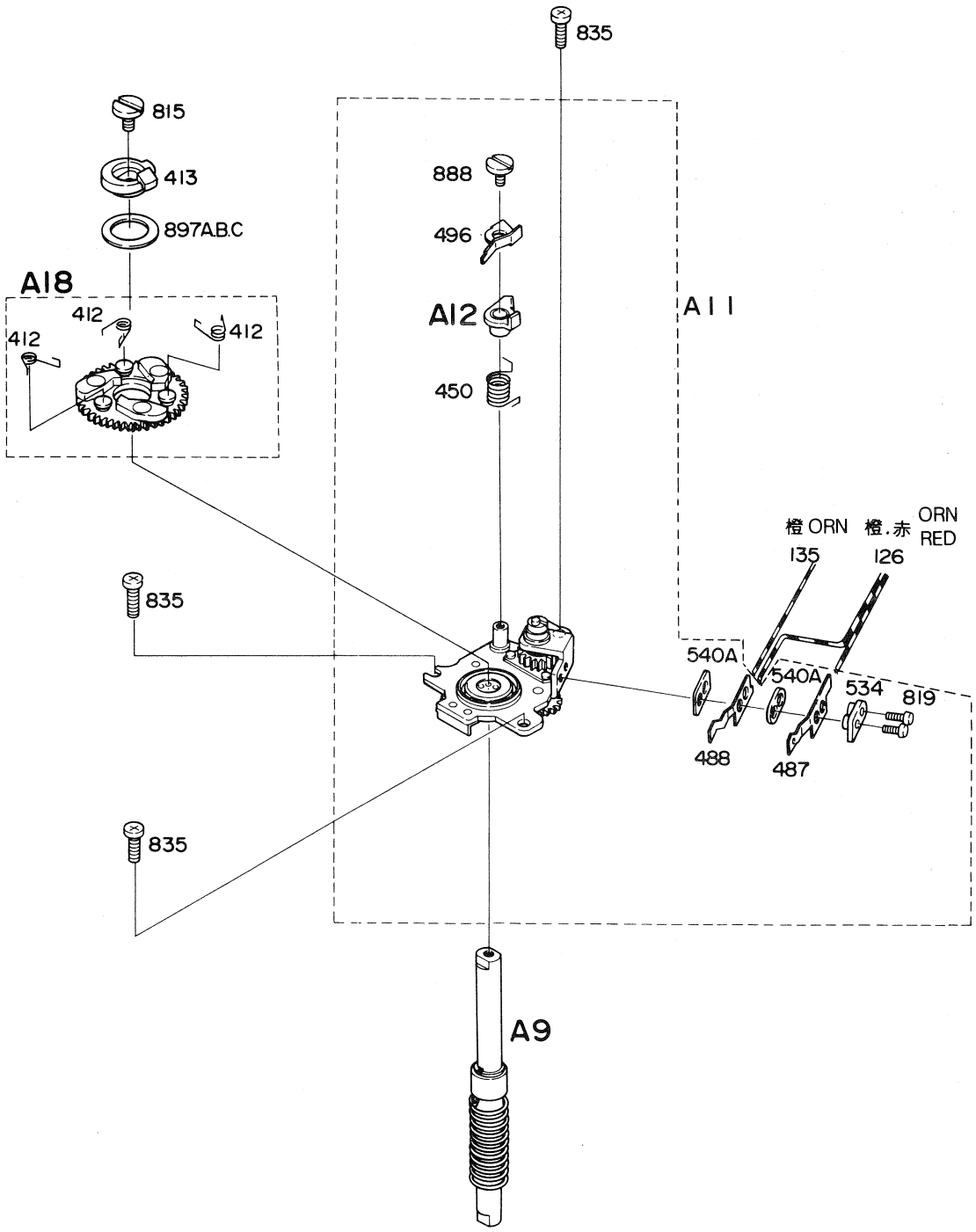
835
815
413
897A.B.C
A18
412
412
412
888
496
A12
450
A11
橙 ORN
135
橙.赤 ORN RED
126
835
540A
540A
534
819
488
487
835
A9

Fig. 3

部品番号 Part No.	名称 Name	備考 Remarks	部品番号 Part No.	名称 Name	備考 Remarks
35FB 126	レバースイッチコード Lead wire, lever switch		P33FB 897A B, C	巻上ギヤワッシャー Washer	
135	マグネットプラスコード Lead wire, magnet ⊕				
A11	下地板 Lower base plate				
			A9	スプール軸 Spool shaft	
			A12	スプロストッパー Sprocket stopper	
P33FB			A18	巻上ギヤ Wind up gear	
P33FB 412	三羽根爪押えバネ Charge cam claw retaining spring				
413	巻上げカム Film advance cam				
450	スプロストッパー戻しバネ Sprocket stopper returning spring				
487	主スイッチ片 A Lever switch contact A				
488	〃 B Lever switch contact B				
496	スプロ制限板バネ Sprocket stopper spring				
534	スイッチ押え板 Claw release pin				
540A	MDスイッチ絶縁板 MD swich insulation plate A				
815	巻上軸ビス Film-advance shaft screw (left handed)				
819	小ねじ JCIS⊕ PM 1.4x3 Type(3) Screw				
835	下地板取付ビス B Lower base plate screw B				
888	スプロストッパービス Sprocket stopper screw				

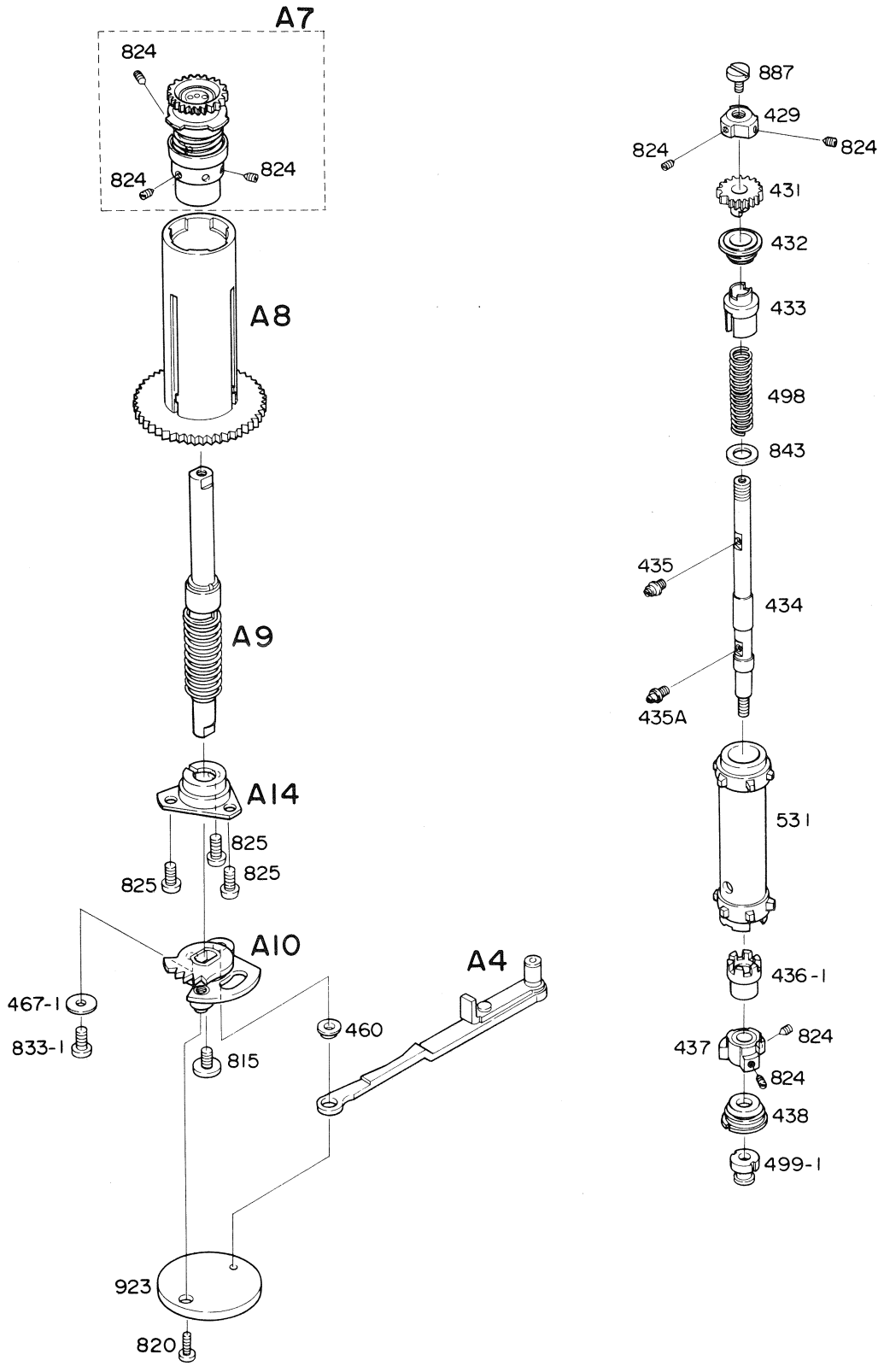
A7
824
824
824
A8
A9
A14
825
825
825
A10
467-1
833-1
815
460
A4
923
820

887
429
824
824
431
432
433
498
843
435
434
435A
531
436-1
437
824
824
438
499-1

Fig. 4

部品番号 Part No.	名称 Name	備考 Remarks	部品番号 Part No.	名称 Name	備考 Remarks
35FB			P33FB 824	ギヤセットビス Gear set screw	
			825	メタルビス JCIS⊕ PM 2x2.5 Type(1)	
			833-1	ゆるみ止めビス Set screw	
P33FB			843	スプロケットバネ受座金 Washer	
P33FB 429	スプロケット制限カム Sprocket stopper cam		887	スプロケット左ねじ Sprocket screw (left handed)	
431	スプロ上ギヤ Sprocket upper gear		923	モーターカップリング Motor coupling	
432	スプロケット軸受 Sprocket shaft bearing				
433	スプロケットカラー Sprocket collar				
434	スプロケット軸 Sprocket shaft		A4	シャッターチャージレバー Shutter charge lever	
435A	スプロケットビス A Sprocket screw A		A7	スプール上ギヤ Spool upper gear	
436-1	スプロケットローラー A Sprocket roller A		A8	スプール Spool	
437	スプロカラー Aナット Sprocket collar A nut		A9	スプール軸 Spool shaft	
438	スプロ軸受 Sprocket shaft bearing		A10	セットカム Set cam	
460	セットカムカラー Rewind button		A14	スプール軸受ケース Spool shaft bearing case	
467-1	ゆるみ止めカラー Anti-reversing claw shaft				
498	スプロケットばね Sprocket spring				
499-1	スプロケット軸カラー B Sprocket shaft collar B				
531	スプロケット Sprocket				
815	巻上軸ビス Film-advance shaft screw (left handed)				
820	カップリングビス Coupling screw				

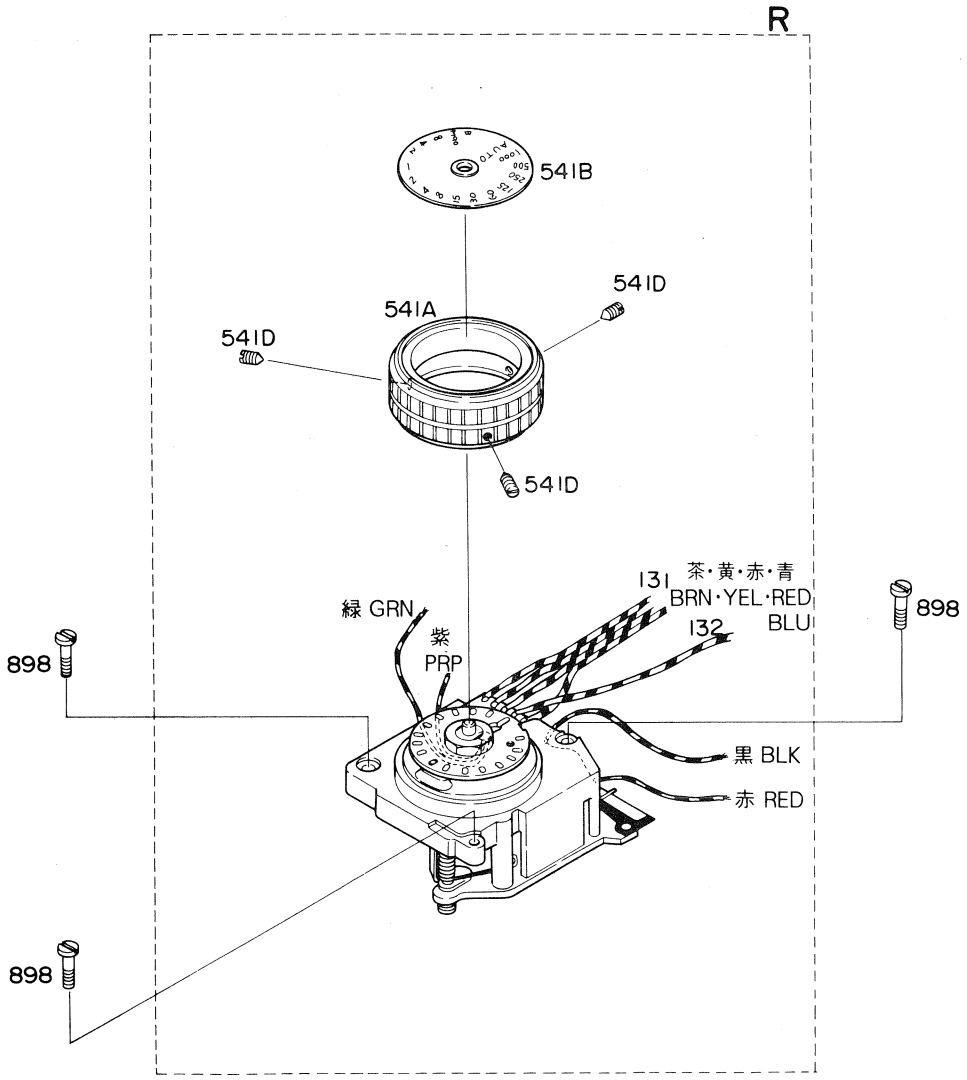
R
541B
541D
541A
541D
541D
131
茶・黄・赤・青
BRN・YEL・RED
BLU
132
緑 GRN
紫
PRP
898
898
898
黒 BLK
赤 RED

Fig. 5

部品番号 Part No.	名称 Name	備考 Remarks	部品番号 Part No.	名称 Name	備考 Remarks
35FB 131	管制部コード A Lead wire A, Shutter speed control				
132	管制部コード B Lead wire B, Shutter speed control				
541A	シャッターダイアル管 Shutter dial tube				
541B	シャッター目盛板 Shutter speed scale				
541D	ボタン飾り座 Set screw				
898	Sダイヤル基板ビス Shutter dial screw				
R	管制部 Shutter speed control				

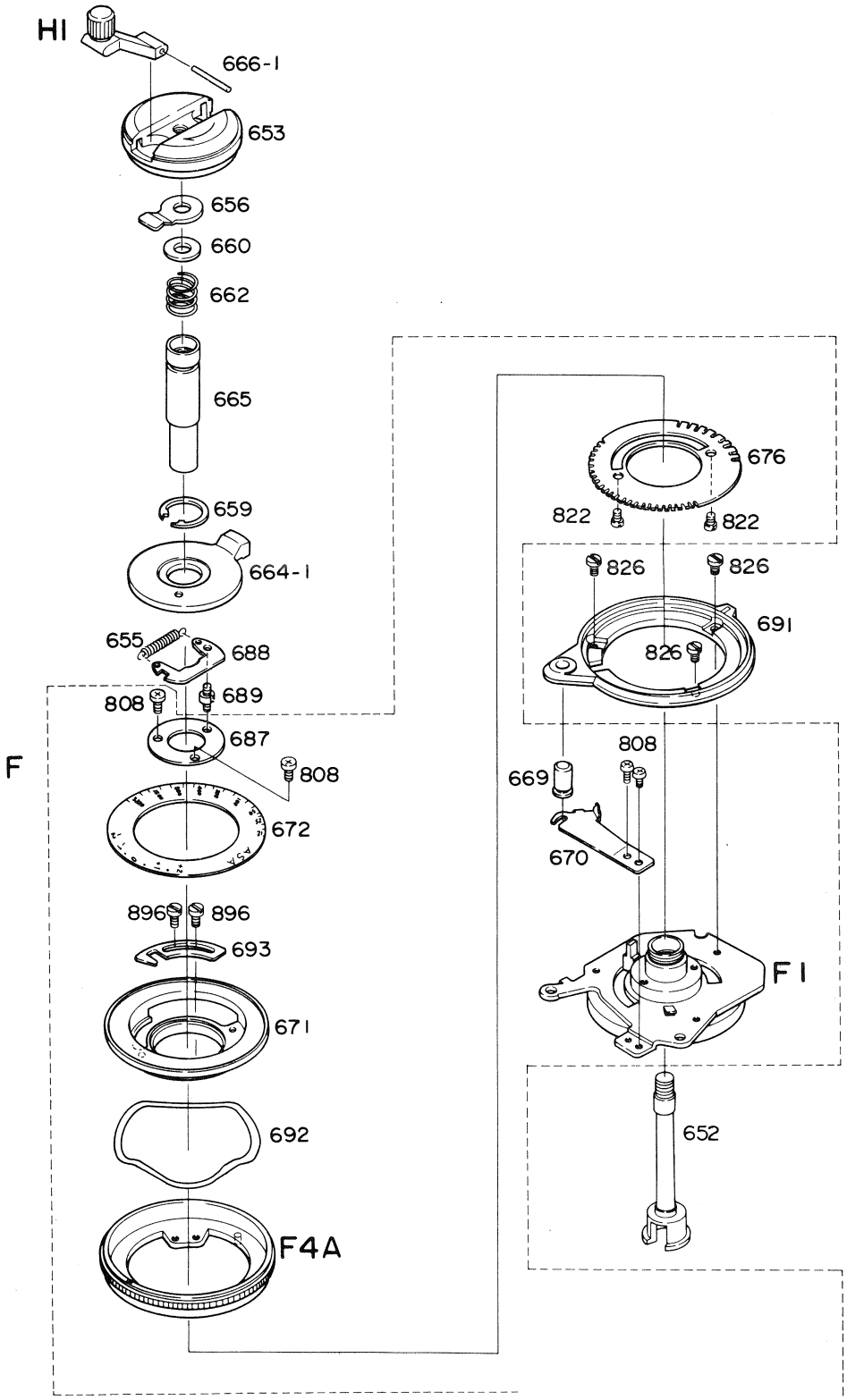
H1
666-1
653
656
660
662
665
659
664-1
655
688
689
808
687
808
F
672
896
896
693
671
692
F4A
676
822
822
826
826
691
826
808
669
670
F1
652

Fig.7

部品番号 Part No.	名称 Name	備考 Remarks	部品番号 Part No.	名称 Name	備考 Remarks
35FB 652	巻戻軸 Rewind shaft		35FB 826	ブラシ板ビス Brush screw	
653	巻戻しノブ Rewind knob		896	連動板取付ビス Aperture coupling plate screw	
655	巻戻し軸受け板用バネ Spring				
659	開閉ノブ押えグリップ Cover latch retaining clip				
660	巻戻軸座金 Rewind shaft washer		F	FRE 部 FRE	
662	フリクションバネ Friction spring		F1	ASA ダイヤル基板 ASA dial mount	
664-1	開閉ノブ O.C. knob		F4A	ASA ダイヤル ASA dial	
665	巻戻軸ガイド Rewind shaft guide		H1	巻戻しレバー Rewind crank	
669	ASA クリック釦 ASA click button				
670	ASA クリックバネ ASA click spring				
671	ASA 目盛貼付環 ASA dial base disk		**P33FB**		
672	ASA 目盛板 ASA dial		P33FB 656	レバー受バネ Rewind crank spring	
676	ASA クリック板 ASA click plate		666-1	巻戻しレバー軸 Rewind crank shaft	
687	目盛貼付環押え板 ASA dial base disk		822	ASA 目盛貼付環制限 ASA-dial base disk stopper	
688	開閉ロックレバー Rewind knob lock lever				
689	ロックレバー軸 Knob lock lever shaft				
691	ASA ダイヤル受座 ASA dial mount				
692	露出補正バネ Exposure correction spring				
693	ASA 連動板 ASA coupler				
808	抵抗函回転軸 FRE shaft screw				

巻戻し部　Rewind Shaft (2)

35FB-R.3012.A

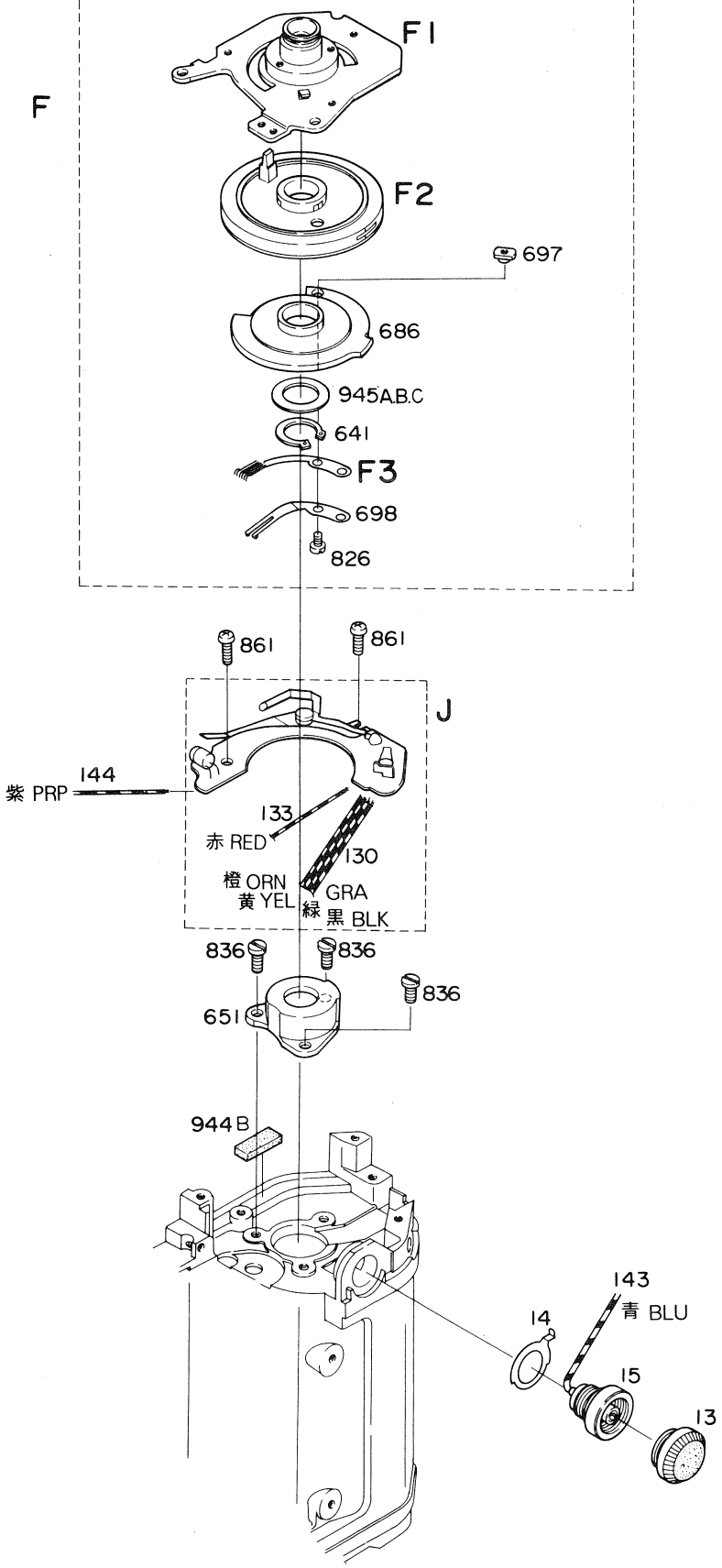

Fig. 6

部品番号 Part No.	名称 Name	備考 Remarks	部品番号 Part No.	名称 Name	備考 Remarks
35FB 14	ターミナルアース板 Terminal earth plate		35FB J	FRE プリント板 Printed circuit	
130	FREコード Lead wire, FRE				
133	プラスコード A Lead wire A		**P33FB**		
143	シンクロコード B Lead wire B, synch		P33FB 13	ターミナルキャップ Terminal cap	
144	チエッカーコード Lead wire, checker		15	シンクロソケット Synch socket	
641	止め輪 Snap ring				
651	巻戻軸受 Rewind shaft bearing				
686	ブラシギャ Brush gear				
697	ブラシナット Brush nut				
698	摺動ブラシ B Sliding brush B				
826	ブラシ板ビス Brush screw				
836	巻戻し軸受ビス Rewind shaft bearing screw				
861	FREプリント板ビス FRE printed board screw				
944B	Jプリント板ゴム J print rubber				
F	FRE 部 FRE				
F1	ASA ダイヤル基板 ASA dial mount				
F2	FRE 環 FRE ring				
F3	ブラシ A Brush A				

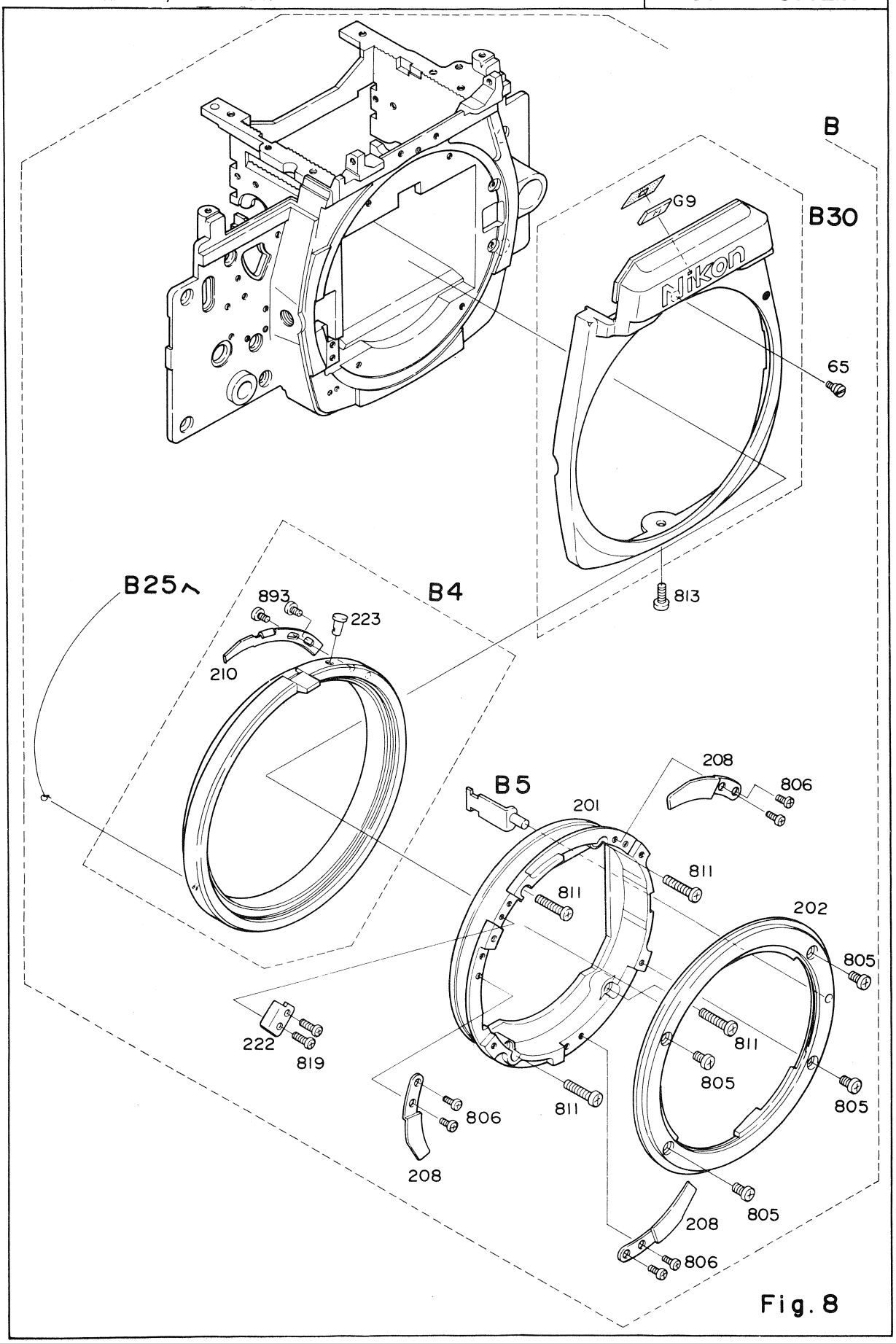
B
B30
G9
Nikon
65
813
B25へ
B4
893
223
210
B5
208
806
201
811
811
202
805
222
819
811
805
806
811
805
208
805
208
806

Fig. 8

部品番号 Part No.	名称 Name	備考 Remarks	部品番号 Part No.	名称 Name	備考 Remarks
35FB 201	マウント台 Bayonet mount		P33FB 893	絞り連動片バネビス Aperture coupling piece screw	
222	連動環回転制限 Coupling ring stopper				
G9	レンズ Lens				
			B5	着脱レバー Lens release lever	
B	前板 Front plate				
B4	絞り連動環 Aperture coupling ring				
B30	前カバー銘板 Front cover	(Black)			
P33FB					
P33FB 65	前カバー用段ビス Front cover screw	(Black)			
202	バヨネット環 Bayonet				
208	バヨネットバネ Bayonet spring				
210	絞り連動片バネ Coupling piece spring				
223	連動片バネボタン Coupling piece spring button				
805	バヨネット止ビス Bayonet set screw				
806	小ねじ JCIS ⊕ PM 1.7x1.8 Type(1) Screw				
811	バヨネット台ビス Bayonet mount screw				
813	前カバービス Front cover screw	(Black)			
819	小ねじ JCIS⊕ PM 1.4x3 Type(3) Screw				

35FB-R.3012.A

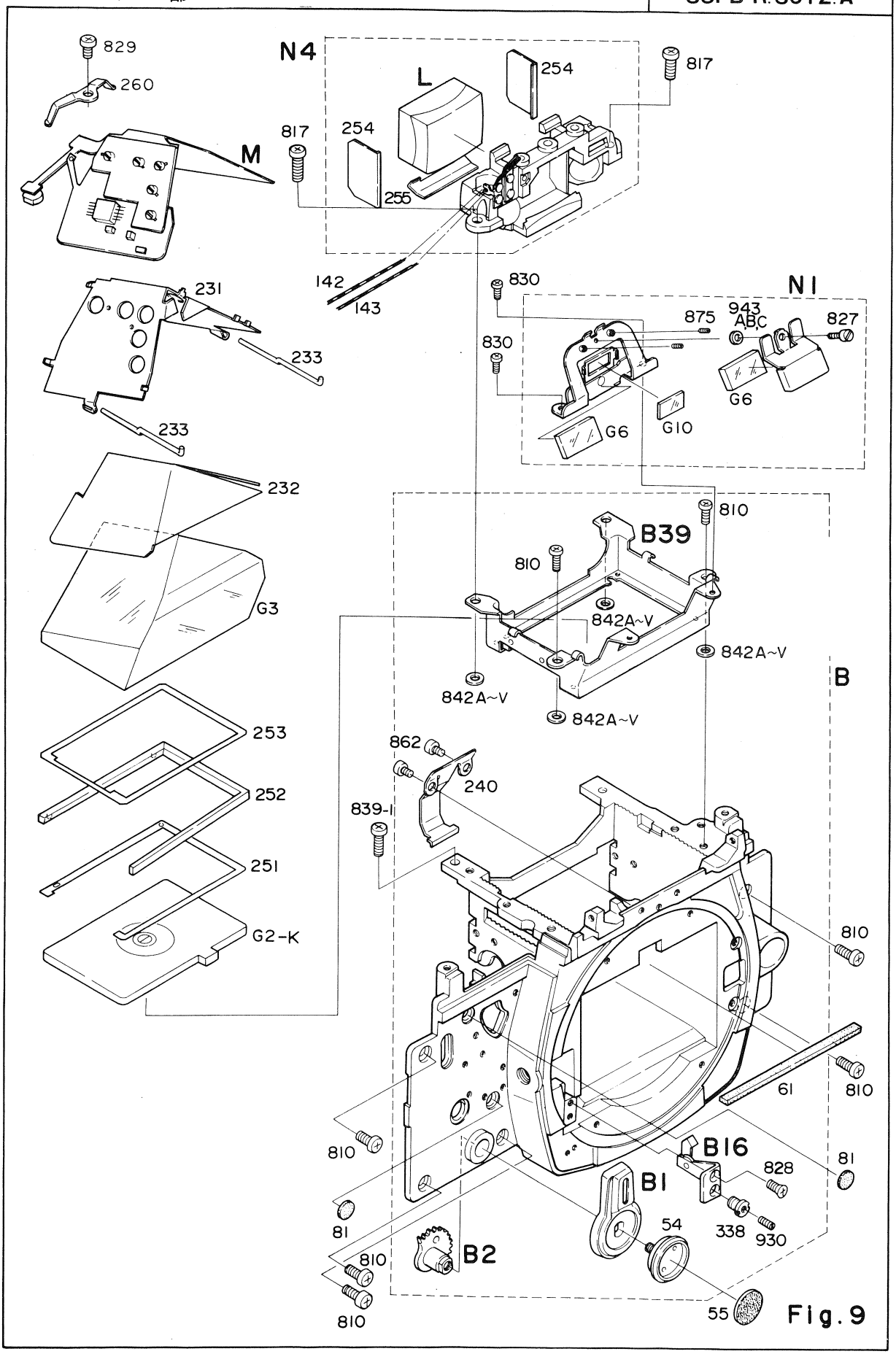

Fig.9

部品番号 Part No.	名称 Name	備考 Remarks
35FB 61	ミラーアップ受けモルト Mirror-up buffer	
81	前板孔カバー Front plate hole lid	
142	シンクロコード A Lead wire A, synch	
143	シンクロコードB Lead wire B, synch	
231	ペンタ押え板 Prism retaining plate	
233	プリズム押えバネ Prism retainer spring	
240	スクリーンロックバネ Screen lock spring	
251	視野枠 Finder field frame	
252	間隔枠 Spacer	
253	プリズム絞り板 Prism mask	
254	接眼横遮光板 Light baffle	
260	SPD プリント板押え SPD printed board retainer	
338	45°ストッパー座止ビス 45° stopper base screw	
827	ブラシ連動ギヤビス Brush coupling gear screw	
828	小ねじ JCIS⊕ CM 2x2.5 Type(1) Screw	
839-1	小ねじ JCIS⊕ PM 1.7x4.5 Type(3) Screw	
862	小ねじ JCIS⊕ PM 1.7x1.5 Type(1) Screw	
930	ミラースイッチ調整ビス Mirror switch adjusting screw	
943A	F ミラー調整座金 Washer	
943B	ミラー調整座金 Washer	

部品番号 Part No.	名称 Name	備考 Remarks
35FB G2-K	フレネル Kタイプ Fresnel screen K type	
G10	レンズ Lens	
B	前板 Front plate	(Black)
B2	セルフ連動ギヤ Self-timer gear	
B16	45° ストッパー 45° stopper	
B39	プリズムボックス Prism box	
L	接眼レンズ Eyepiece lens	
M	IC プリント板 IC printed circuit	
N1	ミラー保持基板 Mirror retaining base plate	
N4	接眼モールドメガネ Eyepiece mold	

P33FB

54	セルフレバービス Self-timer lever screw	(Black)
55	セルフレバー用皮 Leatherette	
232	プリズム押えシート Prism retainer	
255	接眼レンズ押え板 Eyepiece retainer	
810	前板取付ビス Front plate screw	

35FB - R.3012.A

部品番号 Part No.	名称 Name	備考 Remarks
P33FB 817	小ねじ JCIS⊕ PM 2x5 Type(3) Screw	
829	タッピンネジ Tapping screw	
830	小ねじ JCIS⊕ CM 2x2.5 Type(1) Screw	
842A - V	ワッシャー Washer	
875	小ミラー調整ビス Aperture readout reflex mirror screw	
G3	プリズム Prism	
G6	反射ミラー Aperture readout reflex mirror	
B1	セルフ作動レバー Self-timer lever	

前板部　Front Plate (1)

35FB-R.3012.A

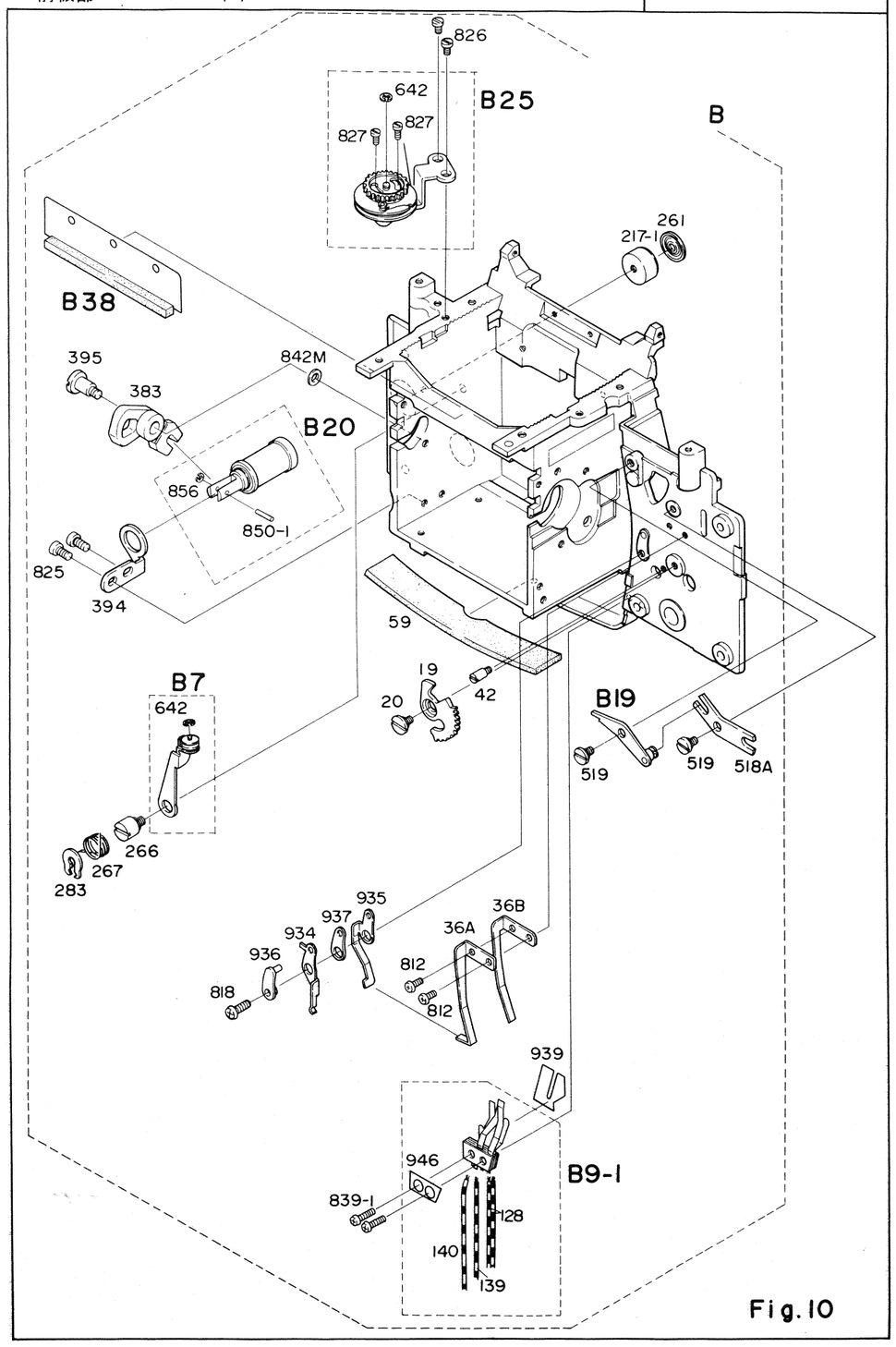

Fig.10

部品番号 Part No.	名称 Name	備考 Remarks	部品番号 Part No.	名称 Name	備考 Remarks
35FB 19	セルフ連動ギヤ B Self-timer gear B		35FB 936	メモリースイッチ絶縁板A Memory switch insulator A	
20	セルフ連動軸 Self-timer coupler		937	メモリースイッチ絶縁板B Memory switch insulator B	
36A	メモリースイッチバネ A Memory switch spring A		939	絶縁ルミラー Front plate insulator	
36B	メモリースイッチバネ B Memory switch spring B		946	ミラースイッチ押え板 Mirror switch retainer	
42	セルフギヤ制限 Self-timer gear stopper				
128	シャッタースイッチコード Lead wire, shutter switch		B7	連動コロ Roller lever	
139	メモリーロックコード Lead wire, memory lock		B9-1	ミラースイッチ Mirror switch	
140	ミラースイッチコード Lead wire, mirror switch		B19	レリーズリバー Release lever	
266	コロレバー軸 Roller lever axle		B25	ブラシ連動ギヤ Brush coupling gear	
267	コロレバーバネ Roller lever spring		B38	ミラーボックス遮光板 Mirror box light-shield plate	
283	G リング G ring				
518A	シーソーレバー Seesaw lever			**P33FB**	
519	レリーズレバー軸 Release lever axle		P33FB 59	ミラーボックス下部モルト Mirror box bottom buffer	
642	E-リング E-ring		217-1	着脱ボタン Lens release button	
818	小ねじ JCIS⊕ PM 1.7x3 Type(3) Screw		261	レンズ着脱ボタン飾り Lens release button pad	
826	ブラシ板ビス Brush screw		383	エアダンパー駆動レバー Air·damper lever	
827	ブラシ連動ギヤビス Brush coupling gear screw		394	エアダンパーホルダー Air damper holder	
839-1	小ねじ JCIS⊕PM 1.7x4.5 Type(3) Screw		395	エアダンパー駆動レバー止めビス Air damper lever screw	
934	メモリースイッチ A Memory lock switch A		812	小ねじ JCIS⊕ PM 1.7x2.2 Type(1) Screw	
935	メモリースイッチ B Memory lock switch B		825	小ねじ JCIS⊕ PM 2x2.5 Type(1) Screw	

部品番号 Part No.	名称 Name	備考 Remarks	部品番号 Part No.	名称 Name	備考 Remarks
P33FB 842M	調整座金 Washer				
850-1	エアダンパーピストンピン Air damper piston pin				
856	多重つまみ用 Eリング E ring				

前板部　Front Plate (2)

35FB-R.3012.A

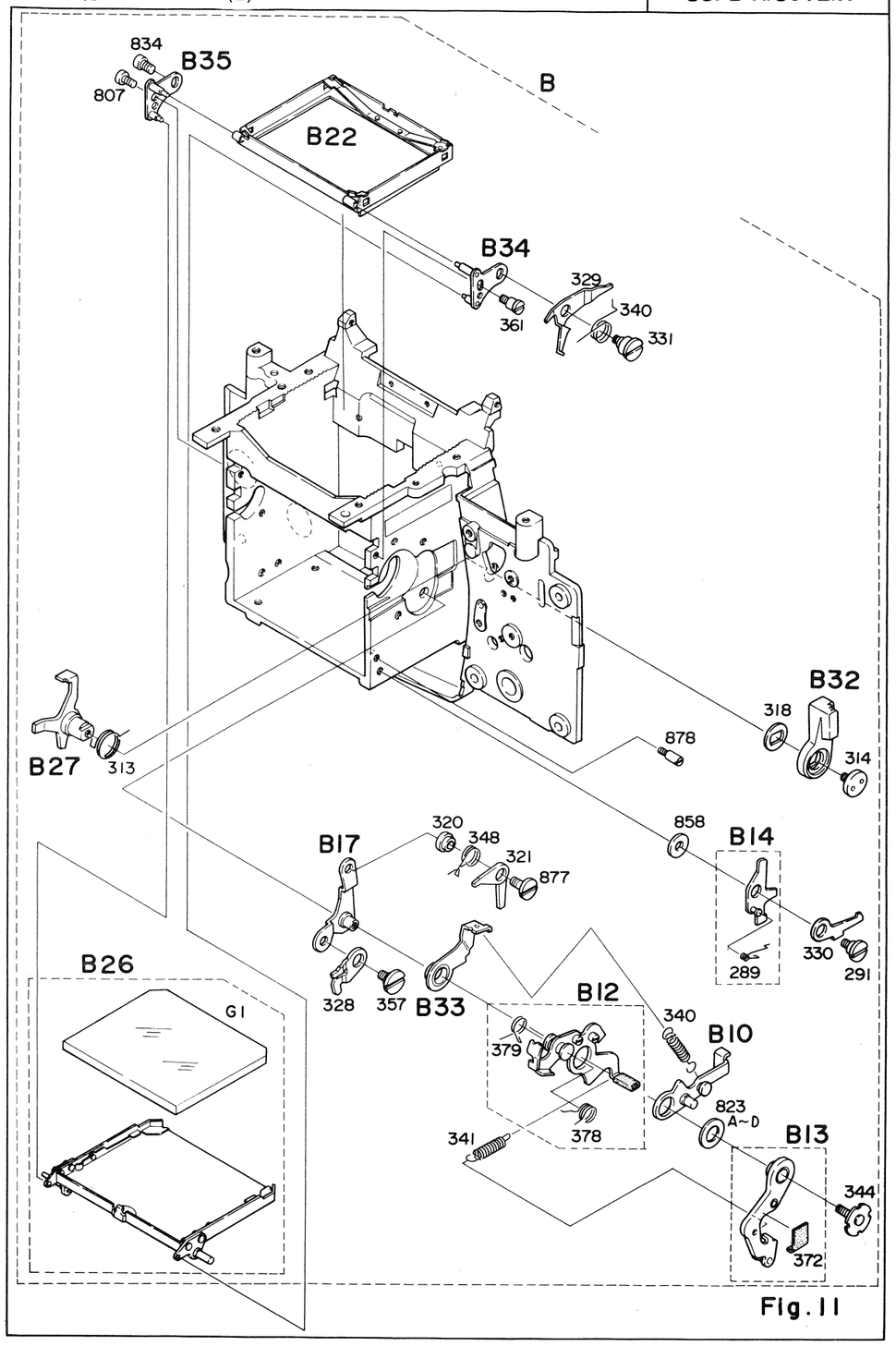

Fig.11

部品番号 Part No.	名称 Name	備考 Remarks
35FB 313	手動絞りレバーバネ Manual stop-down lever spring	
314	絞りレバービス Diaphragm actuating lever screw	
318	手動絞りレバー座 Manual stop-down lever washer	
320	シャッターレリーズカラー Shutter release collor	
321	シャッターレリーズレバー Shutter release lever	
329	ミラーアップ押えレバー Mirror-up stop lever	
348	シャッターレリーズバネ Shutter release spring	
361	ミラーアップ押えレバーバネ掛け Spring stud	
378	ミラースプリング（大） Mirror spring	
807	小ねじ JCIS⊕ PM 1.7x2 Type(3) Screw	
834	小ねじ JCIS⊕ PM 2x2 Type(1) Screw	
877	シャッターレリーズレバー軸 Shutter release lever axle	
B	前　板 Front plate	(Black)
B12	ミラーアップレバー Mirror-up lever	
B17	ミラーレバー軸取付板 Mirror lever shaft base	
B22	スクリーン枠 Screen frame	
B27	手動絞りレバー Stop-down lever	
B32	絞り込みレバー Diaphragm set lever	
B34	巻上側ミラー軸止め板 Mirror shaft stopper, advance-lever shaft	

部品番号 Part No.	名称 Name	備考 Remarks
35FB B35	巻戻し側ミラー軸止め板 Mirror shaft stopper, rewind-knob side	
P33FB		
P33FB 289	ミラー係止レバーバネ Mirror-down signal lever	
291	係止レバー軸 Latch lever axle	
328	シグナルレバー Signal lever	
330	ミラーダウン係止レバー Mirror-down latch lever	
331	ミラーアップ押えレバー軸 Mirror-up stop lever axle	
340	絞りレバーバネ Diaphragm actuating lever spring	
341	ミラーアップバネ Mirror-up spring	
344	レバー押えビス Mirror holder screw	
357	シグナルレバー止めビス Signal lever screw	
372	防振用ゴム Cushion rubber	
823A - D	ミラーレバー軸調整用座金 Washer	
858	ミラーボックス座板 Mirror box washer	
878	ダウン係止レバーストッパー Down-stopper lever stopper	
B10	絞りレバー Diaphragm actuating lever	
B14	ミラーダウン信号レバー Mirror down signal lever	(Black)
B33-1	絞りレバーバネ掛け Diaphragm spring stud	

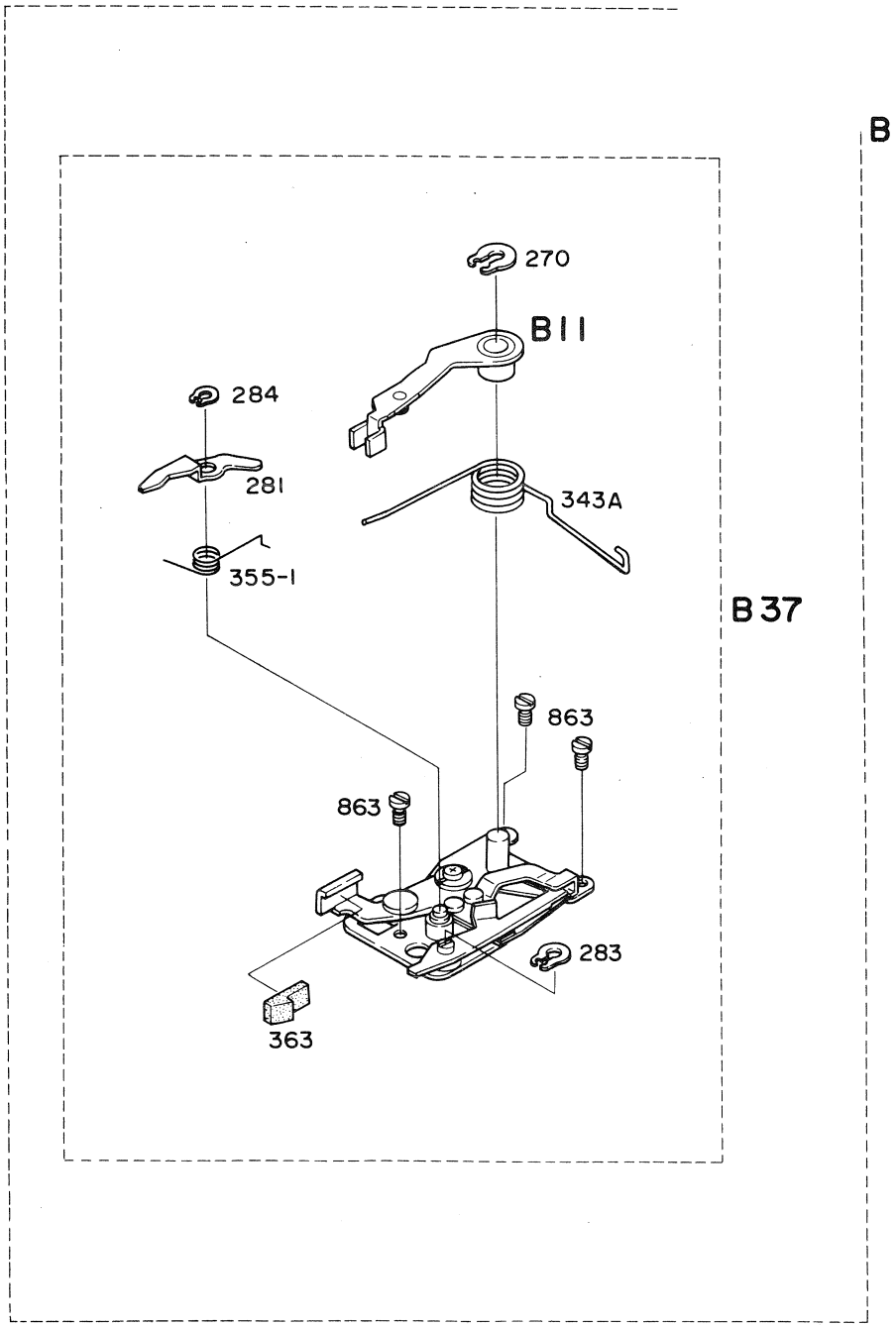

Fig.12

部品番号 Part No.	名称 Name	備考 Remarks	部品番号 Part No.	名称 Name	備考 Remarks
35FB 270	G リング G ring		P33FB		
283	G リング G ring		P33FB 281	ブレーキ解除レバー Brake release lever	
284	G リング G ring		355-1	ブレーキレバー戻しバネ Brake lever Retaining spring	
343A	ダウンバネ Mirror-down spring				
363	ダウンレバー緩衝ゴム Shock absorb rubber				
863	ミラーボックス下基板ビス Mirror box base plate Screw				
B	前板 Front plate	(Black)			
B11	大レバー Large lever				
B37	ブレーキ部組 Shutter brake				

35FB-R.3012.A

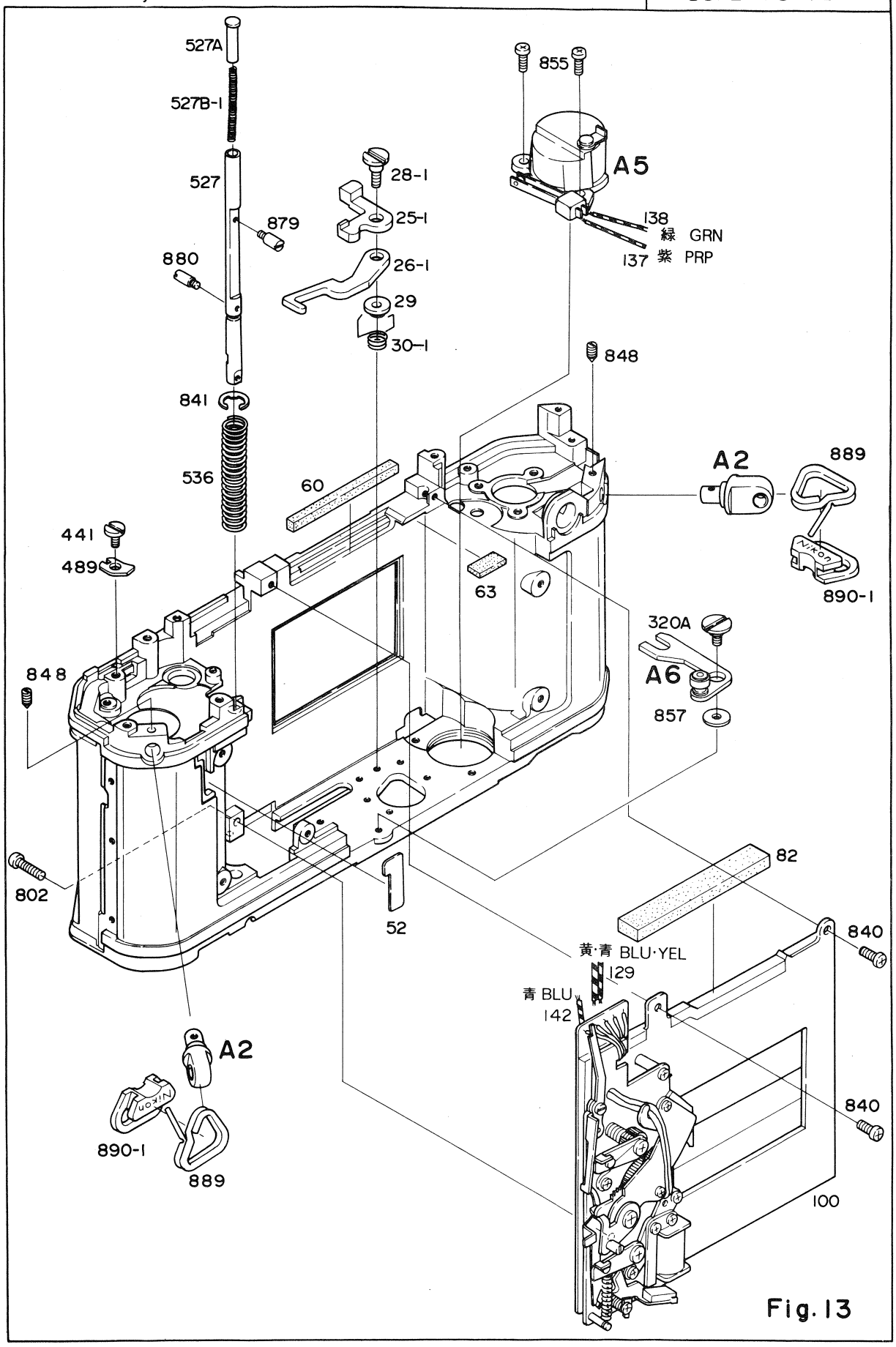

Fig. 13

部品番号 Part No.	名称 Name	備考 Remarks	部品番号 Part No.	名称 Name	備考 Remarks
35FB 100	シャッター Shutter		P33FB 489	三羽根爪外しレバー Charge cam claw release lever	
129	トリガスイッチコード Lead wire, trigger switch		527A	レリーズ軸補助 Release shaft supporter	
137	後幕シグナルコード B Lead wire B, second curtain signal		527B-1	レリーズ釦補助バネ Spring	
138	後幕シグナルコード A Lead wire A, second curtain signal		536	レリーズ軸バネ Release shaft spring	
142	シンクロコード A Lead wire A, synch		802	小ねじ JCIS⊕ PM 1.7x3 Type(1) Screw	
527	レリーズ軸 Shutter release shaft		840	シャッター取付ねじ B Shutter attaching screw B	
880	Bレバー解除ビス B-lever release screw		841	レリーズ軸用 Eリング Release shaft E ring	
			848	つり環ビス Eyelet set screw	
P33FB			855	小ねじ JCIS⊕ PM 2x3.5 Type(3) Screw	
P33FB 25-1	MD・SW 連動レバー Motor switch coupling lever		857	大レバー座金 Washer	
26-1	空撮り防止レバー Blank exposure preventer lever		879	レリーズレバーガイド軸 Release lever guide pin	
28-1	MD 信号レバー軸 MD signal lever axle		889	三角環 Neck-strap ring	
29	空撮り防止レバー軸カラー Blank exposure preventer lever collor		890-1	三角環保護カバー Neck-strap ring cover	
30-1	MD 信号レバーバネ MD signal lever spring				
54	セルフレバービス Self-timer lever screw				
60	接眼下部遮光モルト Light-tight (for eyepiece)		A2	耳環 Eyelet	
63	シャッター羽根受けゴム Shutter curtain rubber		A5	電池ケース Battery chamber	
82	シャッター上遮光モルト Light-tight, shutter top		A6	チャージレバー Charge lever	
320A	チャージレバー軸 Charge lever axle				
441	三羽根爪外しレバー軸 Charge cam claw release lever axle				

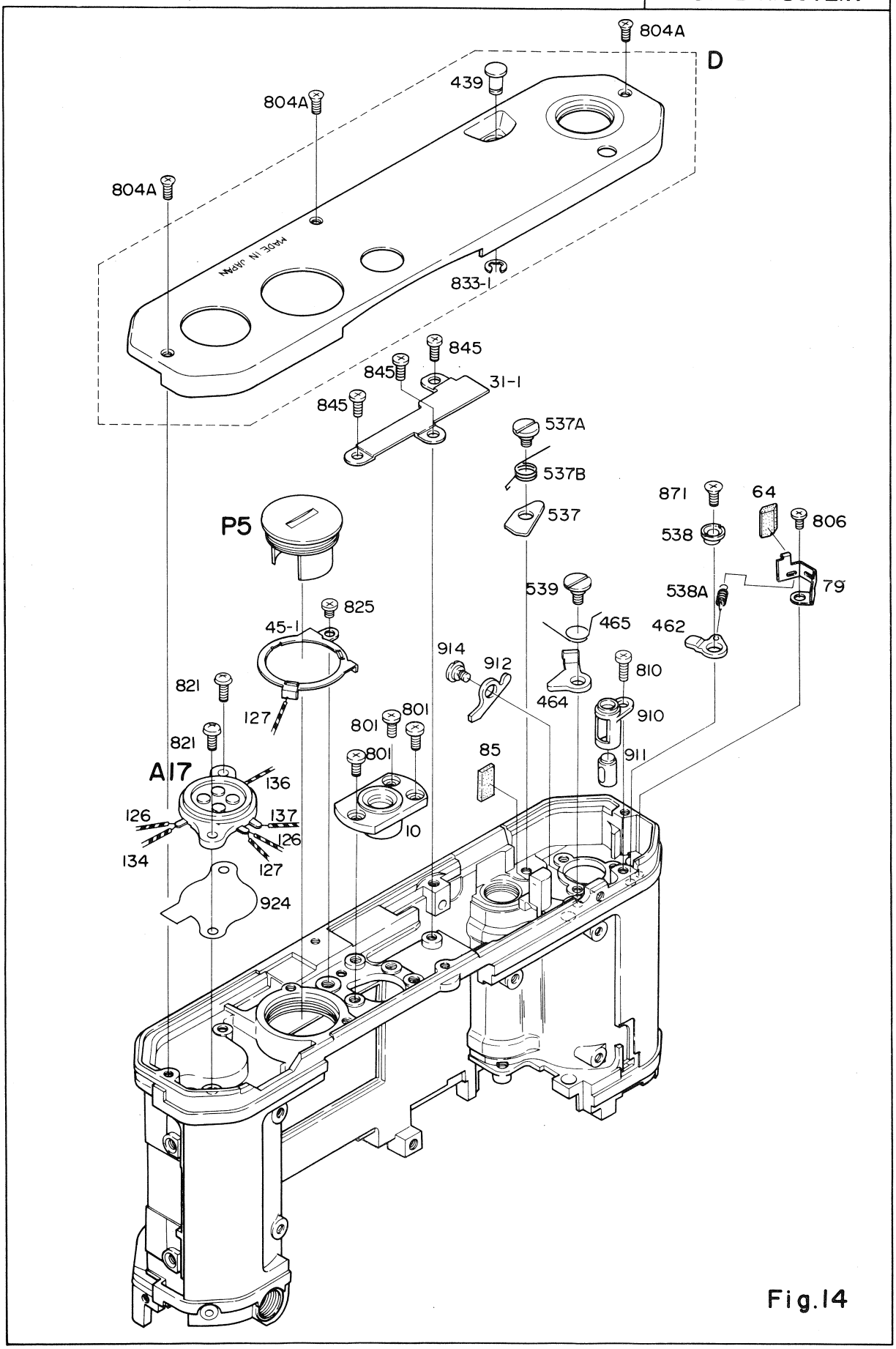
804A
D
439
804A
804A
833-1
845
845
31-1
845
537A
537B
537
871
64
806
538
P5
539
538A
79
825
465
462
45-1
914
912
810
821
464
910
127
801
801
821
801
85
911
A17
136
126
137
126
10
134
127
924

Fig.14

部品番号 Part No.	名称 Name	備考 Remarks
35FB 79	緩衝板 Shock absorb plate	
126	レバースイッチコード Lead wire, lever switch	
127	電源コード Lead wire, power source	
134	プラスコード B Lead wire B	
136	MD スイッチコード Lead wire, MD switch	
137	後幕シグナルコード B Lead wire B	
P33FB		
P33FB 10	三脚座 Trippod socket	
31-1	底部押え板 Retaining plate, bottom	
45-1	電池アース接片 Battery chamber earth contact	
64	緩衝ゴム Shock absorb rubber A	
85	シャッターチャージレバー受けゴム Charge lever base rubber	
439	巻戻釦 Rewind button	
462	振り子 Pendulum	
464	ロックレバー Lock lever	
465	ロックレバーバネ Lock lever spring	
517	偏心軸軸受 Eccentric shaft bearing	
537A	AR レバー軸 AR lever axle	
537B	AR レバーバネ AR lever spring	

部品番号 Part No.	名称 Name	備考 Remarks
P33FB 538	振り子偏心軸 Pendulum eccentric axle	
538A	振り子バネ Pendulum spring	
539	ロックレバー軸 Lock lever axle	
801	小ねじ JCIS⊕ PM 2x3 Type(3) Screw	
804A	小ねじ JCIS⊕ CM 1.7x2.5 Type(1) Screw	
806	小ねじ JCIS⊕ PM 1.7x1.8 Type(1) Screw	
810	前板取付ビス Front plate screw	
821	小ねじ JCIS⊕ PM 2x4 Type(3) Screw	
825	小ねじ JCIS⊕ PM 2x2.5 Type(1) Screw	
833-1	ゆるみ止めビス Set screw	
845	小ねじ JCIS⊕ PM 2x3 Type(1) Screw	
871	小ねじ JCIS⊕ CM 2x4.5 Type(3) Screw	
910	MD 軸受 MD shaft bearing	
911	MD 軸 MD shaft	
912	MD シーソーレバー MD seesaw lever	
914	MD シーソーレバー軸 Seesaw lever axle	
924	絶縁シート Insulating seat	
A11	下地板 Lower base plate	
D	底蓋 Bottom plate	
P5	電池キャップ Battery chamber cap	

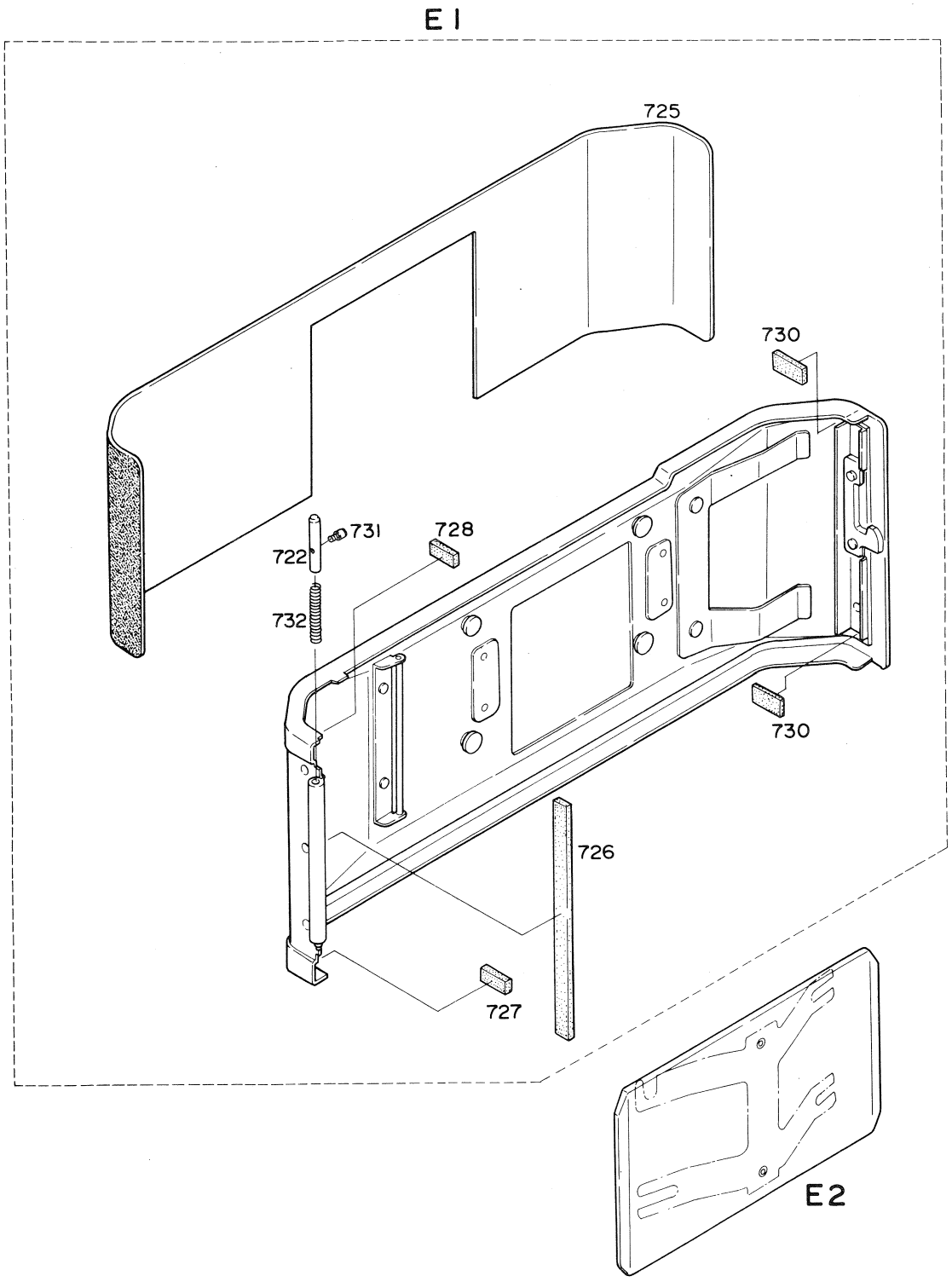

Fig. 15

部品番号 Part No.	名称 Name	備考 Remarks	部品番号 Part No.	名称 Name	備考 Remarks
35FB					
P33FB					
P33FB 722	蝶番芯金 Hinge shaft B				
725	裏蓋用貼皮 Back cover leatherette				
726	遮光モルト A Light-tight A				
727	遮光モルト B Light-tight B				
728	遮光モルト C Light-tight C				
730	遮光別珍 Light-baffle cloth B				
731	裏蓋着脱ピン Camera back release pin				
732	裏蓋着脱バネ Camera back release ring				
E1	裏蓋 Camera back				
E2	圧板 Pressure plate				

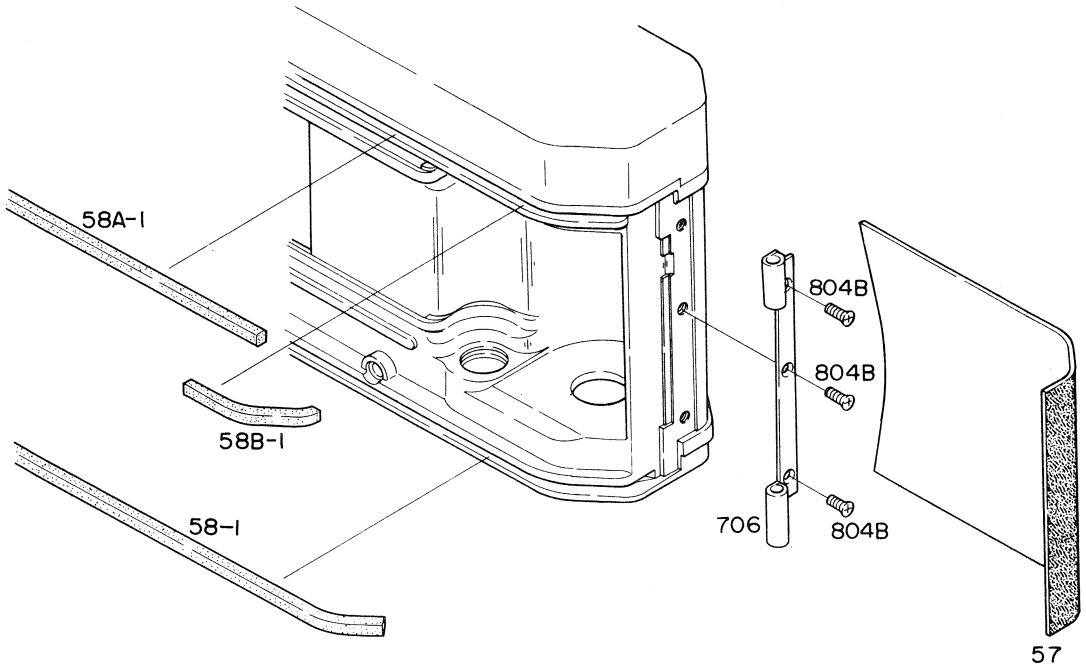

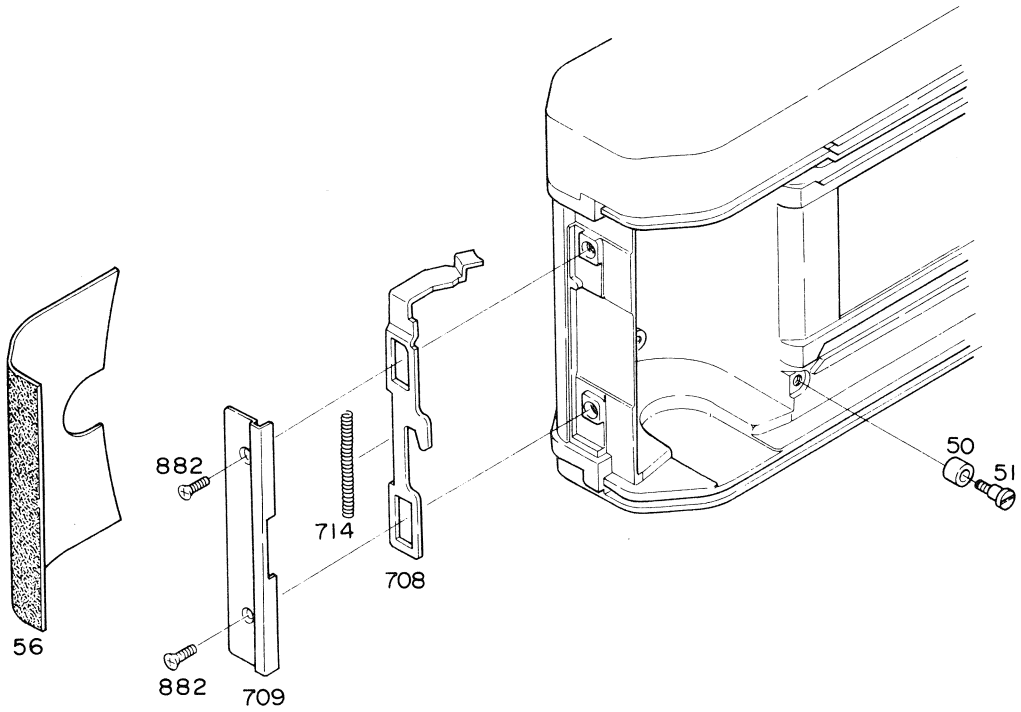

Fig.16

部品番号 Part No.	名称 Name	備考 Remarks	部品番号 Part No.	名称 Name	備考 Remarks
35FB 56	ボディ擬革 A Vinyle leatherette A				
57	ボディ擬革 B Vinyle leatherette B				
706	裏蓋蝶番 A Camera back hinge A				
708	止め爪 B Latch B				
P33FB					
P33FB 50	ローラー Roller				
51	ローラー軸 Roller shaft				
58-1	溝用モルトプレン Light-tight (for groove)				
58A-1	上溝用モルトプレン A Light-tight A				
58B-1	上溝用モルトプレン B Light-tight B				
709	止め爪カバー Latch cover				
714	止め爪バネ Latch spring				
804B	小ねじ JCIS⊕ CM 1.7x2.5 Type(1) Screw				
882	小ねじ JCIS⊕ CM 1.7x3 Type(1) Screw				

Section IV. Disassembly, Assembly & Adjustment

Content

Disassembling procedures chart

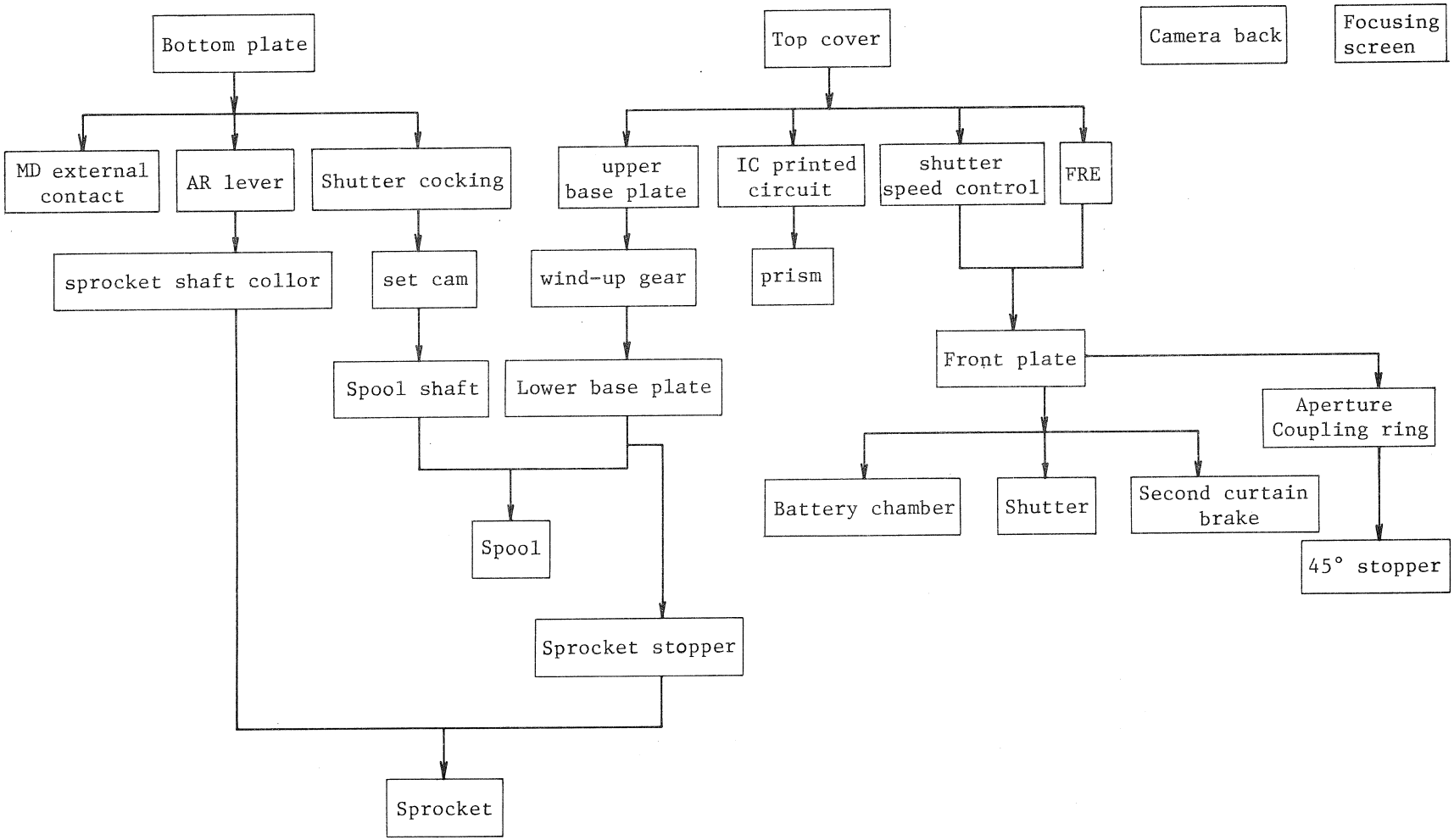

35FB - R.3012.A

Disassembling Procedures

Top cover · Wind-up lever

Wind-up lever leatherette #402
↓
Wind-up lever screw #403
↓
Wind-up lever P3

Be careful not to drop multi-exposure knob #491

Shutter dial

Shutter dial, Screw ⊖ #541Dx3

Top Cover · Rewind crank

Rewind crank H1
↓
Spring #656
Washer #660
Friction spring #662
↓
Rewind shaft #652
↓
Rewind shaft guide #665
↓
Cover latch retaining clip #659
↓ Use special plier J5272
O.C. knob #664
↓
Rewind knob lock lever #688
↓ One end of spring #655 should be disengaged
Scale attaching ring retainer #687
Screw ⊕ #808x2,
knob lock lever shaft #689
Tool J11089

ASA dial

Top Cover (Assy C), Screw ⊕ #803x5
↓
Release middle shaft #527A
Spring #527 B-1

Bottom Cover

Battery chamber cap #44
↓
Bottom plate (Assy D), Screw ⊕ 804x3

Shutter speed control

Unsoldering lead wires
↓
lead wire on Assy R (Blue) #131
" " (Brown) "
" " (Purple) "
" " (yellow) "
" " (white)#132
meter cord on Assy R (Red)
" " (Black)
↓
Shutter speed control (R),
Screw ⊖ #893x3

Setting the shutter dial at B, pull up the wind-up lever side of Assy R slantingly to remove R. Be careful not to scratch T-film or needle.

FRE

FRE, Screw ⊕ #861x3

Front plate

Unsoldering lead wires

FRE cord #130 (Black)
" " (Green)
" " (Yellow)
" " (Orange)
Power supply cord #127 (Orange)
" " (Black)
Synch cord A #142 (Blue)
Trigger switch cord #129 (yellow)
" (Blue)
" (Green)

Shutter

Unsoldering lead wires
↓ Magnet plus cord #135 (Orange)
Shutter #100, Screw ⊕ #802
" ⊕ #840x2

Upper base plate

Unsoldering lead wires
↓ MD switch cord #136 (Blue)
Signal cord B #137 (Purple)
Switch lock lever (Assy P4)
Switch stopper spring #476
Screw ⊖ #473
↓
Upper base plate (Assy K),
Screw ⊕ #845x2

Wind-up gear, Charge cam claw release lever

Screw (left-handed) ⊖#815
↓
Sprocket stopper spring #496,
Screw ⊖ #888-1
↓
Wind-up gear A18, Advance cam #413 — To be removed together

Lower base plate

Unsoldering lead wires
↓
Lever switch cord #126 (Red)
" #126 (Orange)
Magnet plus cord #135 (Orange)
↓
Lower base plate (Assy A11)
Screw ⊕ #835x5
↓
Spool upper gear (Assy A7)

Be careful not to drop ball bearing

Spool

Motor coupling #923, Screw ⊕#820
↓
Retaining plate #31-1,
Screw ⊕ #809x3
↓
Shutter charge lever (Assy A4)
Set cam collar #460
↓
Screw #833-1, Collar #467-1
↓
Set cam (Assy A10),
Screw ⊖ #815 (left-handed)
↓
Spool shaft bearing case (Assy A14)
↓
Spool shaft (Assy A9)
↓
Spool (Assy A8)

Sprocket

Sprocket screw (left-handed) #887
↓
Sprocket stopper cam #429
Screw ⊖ #824x2
↓
Sprocket upper gear #431
↓
Sprocket shaft collor B #499-1
↓ (left-handed), Tool J11129-1
Sprocket screw A #435A
↓ Should be removed through the hole in sprocket #435 while pressing up sprocket shaft #434. Be careful not to drop #435A inside #435.
Sprocket collar A nut #437
↓ Tool J11127
Sprocket

IC printed circuit

Unsoldering lead wires
↓
Mirror switch cord #140 (Grey)
Shutter switch cord #128 (Orange)
" #128 (Pink)
↓
Prism retaining spring #233x2
↓
Eyepiece mold (Assy N4)
Screw ⊕ #817x2
↓ Be careful not to drop washer #842
Prism G3

Aperture coupling ring

Bayonet #202, Screw ⊕ #805x4
↓
Bayonet spring #208x2
(on lens-release pin side)
Screw ⊕ #806x4
↓
Coupling ring stopper #222,
Screw ⊕ #189x2
↓
Bayonet mount #201, Screw ⊕ #811x4
↓
Aperture coupling ring (Assy A4)
Thread #269

- Be careful not to tighten the knot of #269.
- Be careful for #269 not to be wound into B25 after disassembling front plate (B).

1. Sprocket Installation

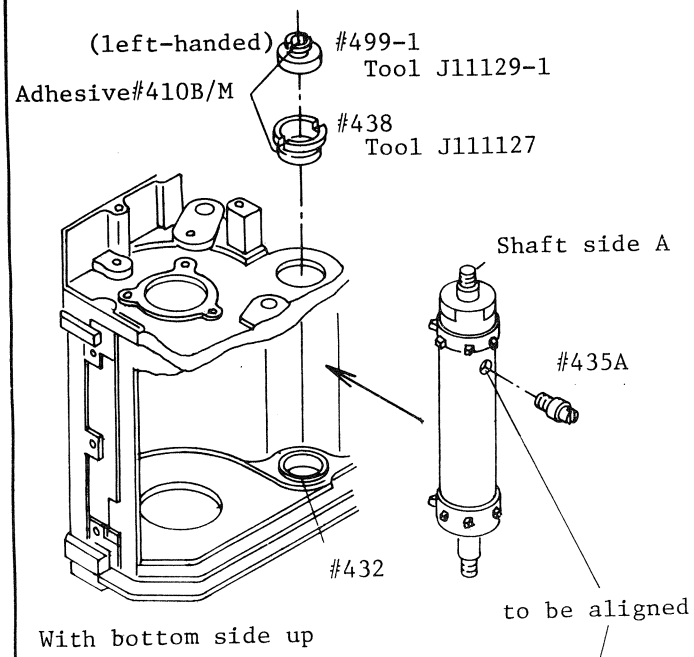

Body die-casting (#1)

↓

Sprocket Assembly

Pre-assemble the sprocket parts, referring to Figure 1 and details below.

Insert the sprocket side A into body. Pulling up sprocket, locate opposite side into #432.

Sprocket shaft bearing #438

↓

Sprocket screw #435A

Align each hole in #531 and in #434 to properly install #435A.

Sprocket shaft collar-B(#499-1)

(left-handed thread)

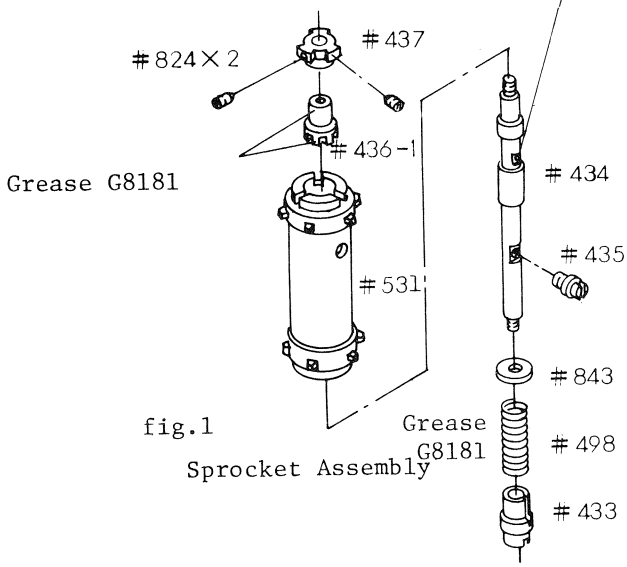

fig.1

Sprocket Assembly

Sprocket Assembly

Sprocket shaft #434

↓

Washer #843

↓

Sprocket spring #498

↓

Sprocket screw #435

Install the above parts as a unit into sprocket.

↓

Sprocket #531

↓

Sprocket collor #433

↓

Sprocket collar A #436
Sprocket collor A nut #437

Temporarily fix #437 onto #436 with two screws (#824) before mounting the unit onto #531.

For positioning of Sprocket teeth; refer to (page 9)

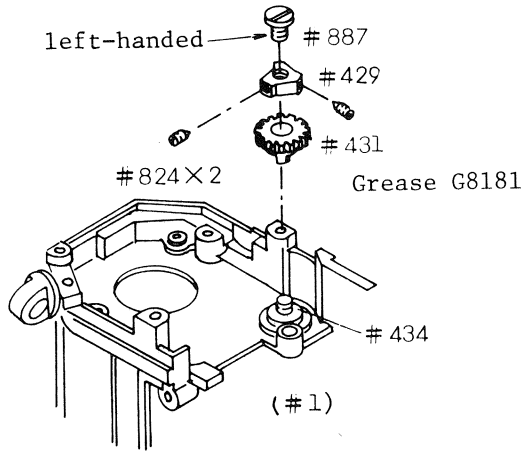

2. Sprocket upper gear and sprocket stopper cam Installation

Sprocket upper gear #431

↓

Sprocket stopper cam #429

Screw #429 onto #434, being careful for #434 not to protrude above #429.
For positioning of #429, refre to page 9

↓

Screw #887, left handed

3. Spool Installation

Body die-casting #1

↓

Spool A8

↓

Spool shaft A9

↓

Spool shaft bearing case A14

Insert the tip of #529 into the slot of A14, then secure with three screws (#825) (see figure 2)

↓

Set cam A10

Turn A9 one clockwise rotation, then install A10.

↓

Screw ⊖ #815 (left-handed) Collar (#467-1)

⊖ #833-1 (left-handed)

Make sure if Set Cam A10 properly returns

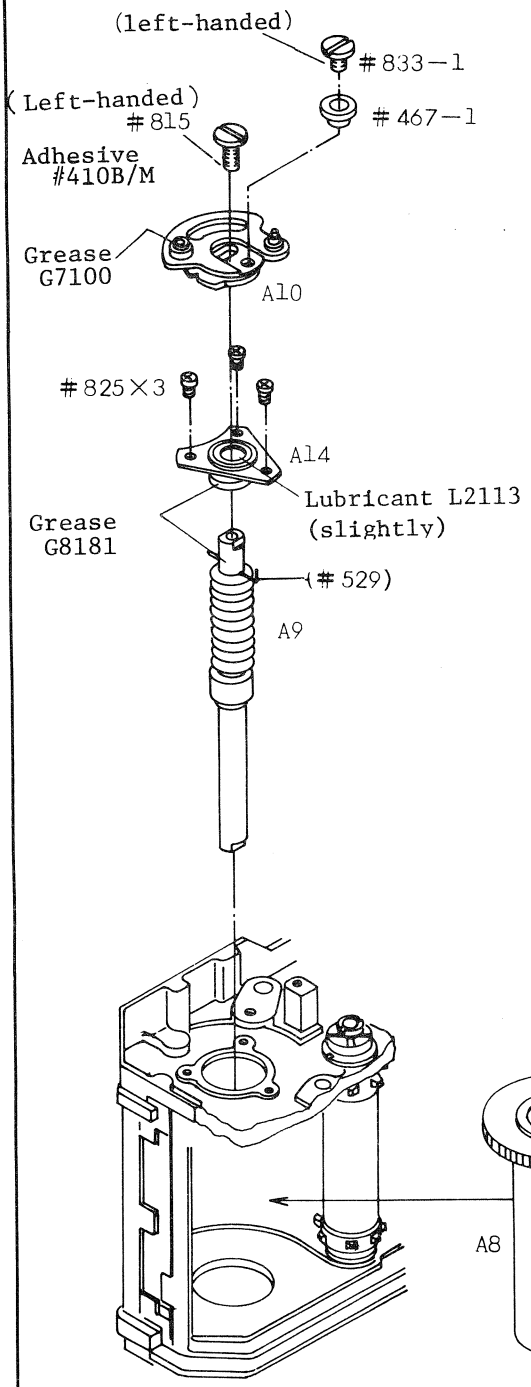

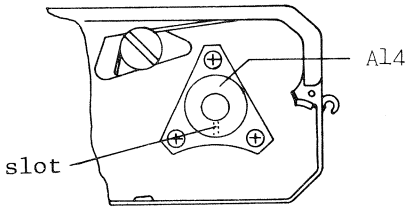

fig.2
A14 Positioning

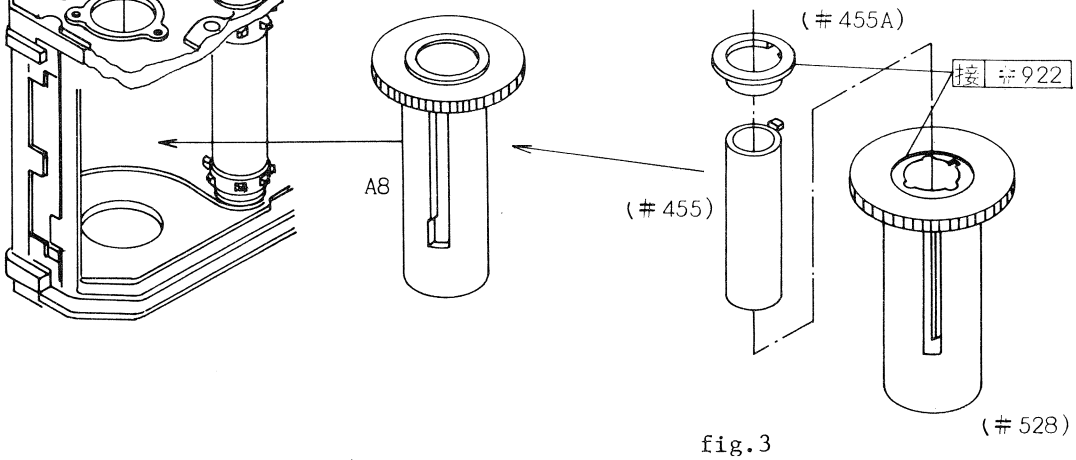

fig.3
A8 Exploded

4. Spool Upper Gear, Lower Base Plate. Advance Gear Installation

Spool upper gear (A7)

↓ Position friction plate (#456-1) in Spool groove while rotating Spool.

Lower base plate A11 Screw (#835)

↓ Position A11 where spool rotates most smoothly.

Advance gear (A18), Advance cam (#413)

↓ Be sure not to remove cam from claw on the gear.

For positioning, refer to P.(4 — 7)

↓

Screw ⊖ #815 (left-handed)

↓

Lead wire #126 (red, orange) Lead wire #135 (Orange)

Refer to wiring diagram 38 (P. 38)

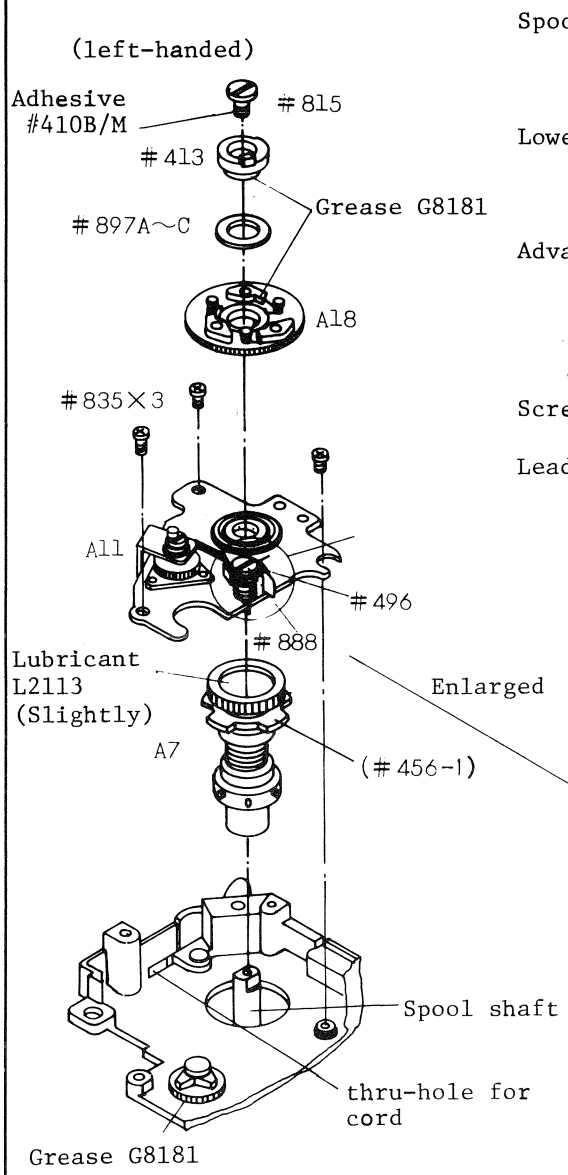

Enlarged

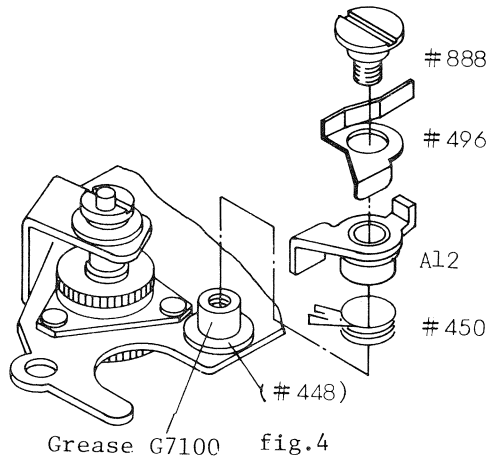

fig.4

Spool Friction torque standard

220-260 g.cm

After spool installation, loosen screw (#824x3), then adjust friction by rotating spool top gear nut #421

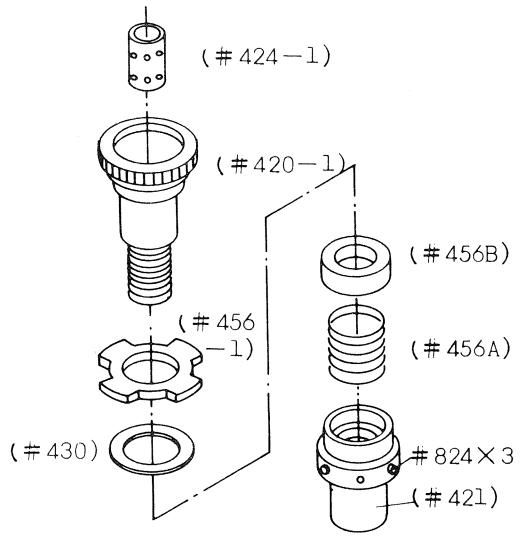

fig.5 A7 Exploded

5. Positioning of Counter Eccentric Shaft(#516-1), Advance Gear A18, Advance Cam #413

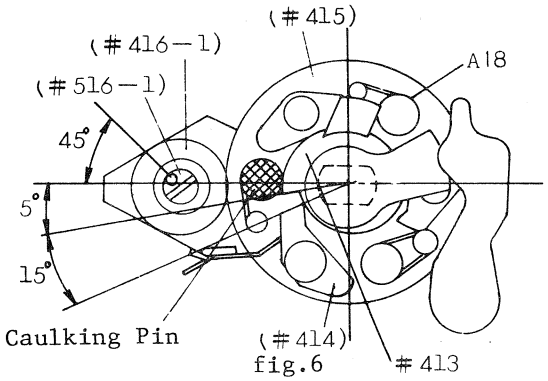

fig.6

Eccentric shaft positioning

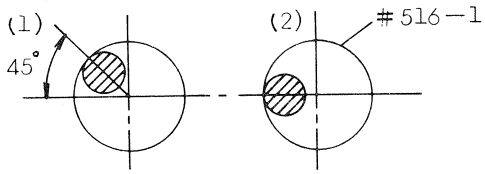

Set cam contacting stopper

Film-advance completed condition with upper base plate installed

Counter eccentric shaft (#516-1)

Rotate sprocket and position #516-1 at a 45 degrees from horizontal center line(See Figure 6)

Advance cam #413
Advance gear A18

Install #413 and A18 when set cam (A10) contacts stopper on body die-casting. To properly adjust the relative position of #413 to #414, engage #415 with #416-1 so that the tip of #414 is at 20 degrees from horizontal center line.(See Figure 6) Note that the center of caulking pin on A18 should be on horizontal center line

After installation, check to see if #516-1 is properly positioned as shown in Figure 7a by rotating #815. After installaing upper base plate, check to see if #516-1 is positioned as shown in Figure 7b.

6. Upper Base Plate, Switch Lock Lever Installation

Body die-casting#1

Upper base plate (K), ⊕ 845x2

Press the film-advance lever flush with body. Rotate Sprocket stopper release plate(#408A) counterclockwise (viewed from the below) until #408A contacts Film advance shaft(#408).Engage advance claw lever (#511-1) with Counter eccentric shaft (#516-1). Put multi-exposure lever (#490) into cutout of charge cam claw release lever (#489) Positions switch lever(K4) between spool shaft and meter switches(#487,#488) (Refer to P. 8 item 7)
Fix Screw(#845-1) into the cutout of #502-1 by rotating #502-1.

Switch Lock Lever (P4), Screw(#473)

Pulling out film-advance lever, install P4. Be sure to properly engage #476 as illustrated in Fig. 8.
Screw #473 into the notch of #502-1 rotating #502-1. To remove Upper Base Plate, be sure not to remove Switch Lock lever, but to loosen #473.

Lead wire #136(Blue),Lead wire #137(Purple) (Refer to P.34 item 38)

After soldering #136 and #137, attach camera back and check the frame counter for correct operation free from skipping, double-frame advance or failure of advance. Also, check for proper resetting.

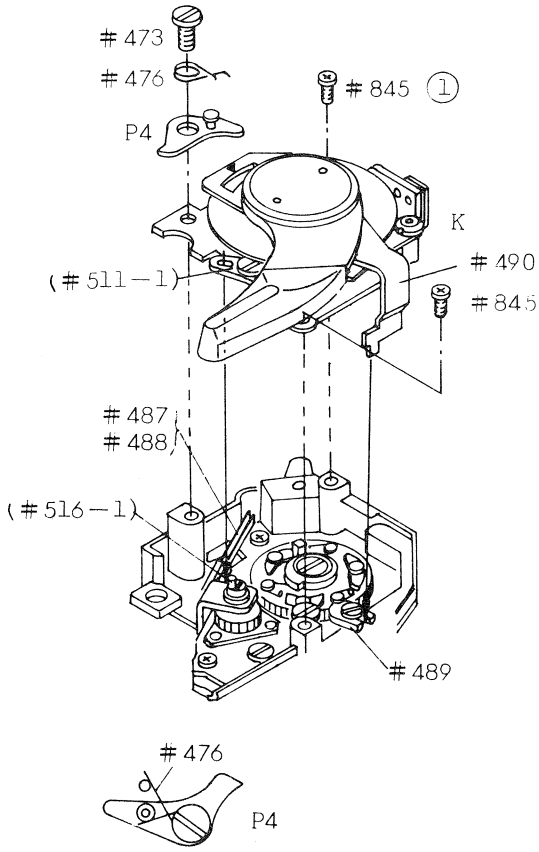

fig.8. Spring(#476) Installation

7. Frame Counter Dial Installation

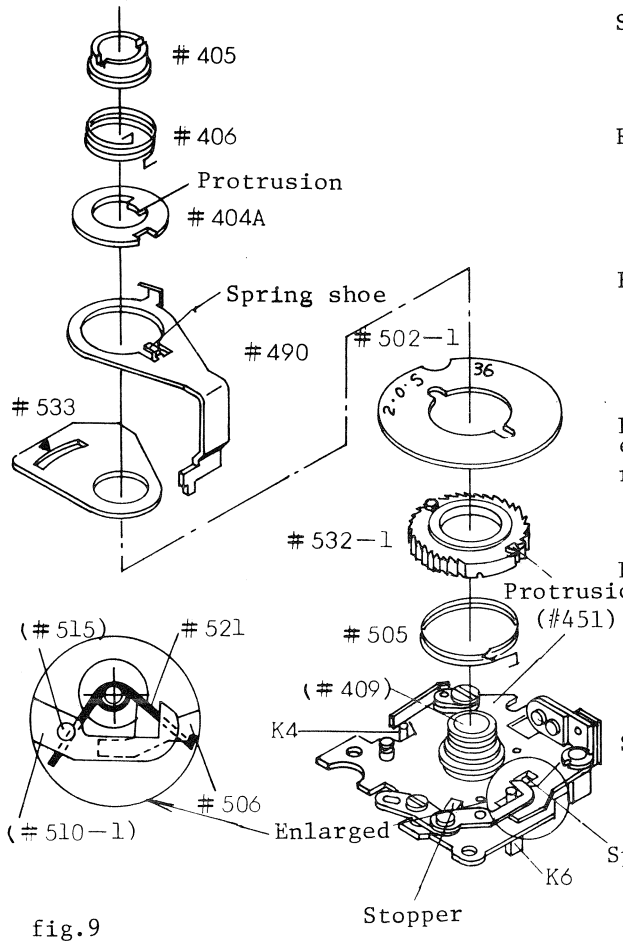

fig.9

Spring(#505)

↓ Install one end into spring hanging hole on the upper base plate(#451)

Ratchet(#532-1)

↓ Install the other end of #505, turn #532-1 one turn clockwise and return #532-1 to the stopper.

Frame counter dial(#502-1)

↓ Align the cut with the protrusions on #532-1 with "S" positioned toward bayonet.

Frame-counter index(#533), Multi-exposure lever(#490), Counter retaining ring(#404A)

↓ Fit the protrusion of #404A in the cut of #409

Lever axle nut(#405)

↓ Align index "▼" of #533 with "S" of #502-1, then tighten #405.
Check to ensure smooth rotation of #502-1

Spring(#406)

Engage #406 onto spring shoe on #490

Spring(#521) Installation

8. Film Advance Lever Installation

Sprocket release plate(#408A)
Film advance shaft #408

↓ Position referring to Fig.10

Film advance lever (P3)

↓ Install #406 on P3 and turn P3 one full turn counterclockwise.

Wind-up lever screw #403

Check film advance lever for smooth operation.
Thrust play to be 0.13mm or less.

After installing Upper Cover, apply adhensive #410S/L.

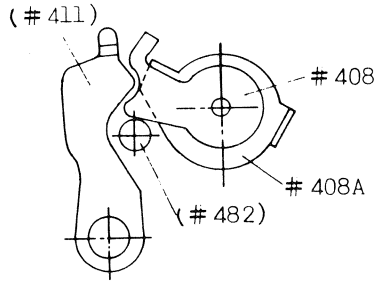

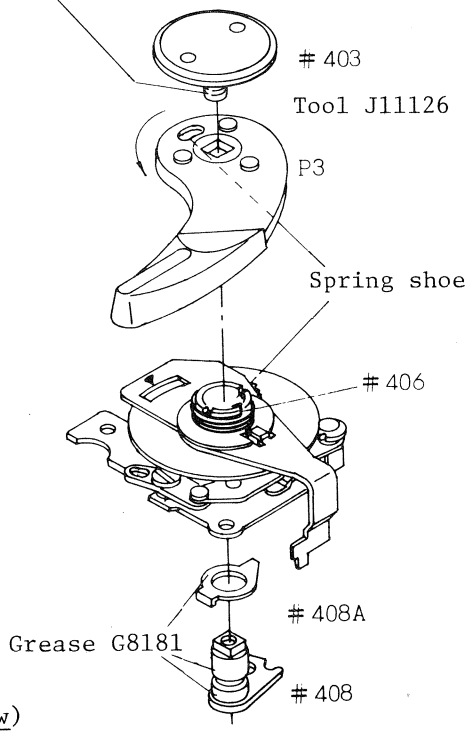

fig.10 Upper Base Plate(Bottom view)

9. Sprocket Stopper Positioning

Set sprocket teeth positioning gauge (J18064) onto body-aperture frame and holding film-advance lever fully stroked, measure the sprocket play on the scale of J18064. The play to be within 0.8mm.

Repeat the measurement three times in the same manner to make sure the proper operation of #429 at each area shown.
Adjust the play by rotating #429 after loosening #887 (left-handed) and #824. (Refer to Fig.11 and 12)

Be sure to provide 0.1 to 0.2mm clearance between #429 and #434 on positioning.

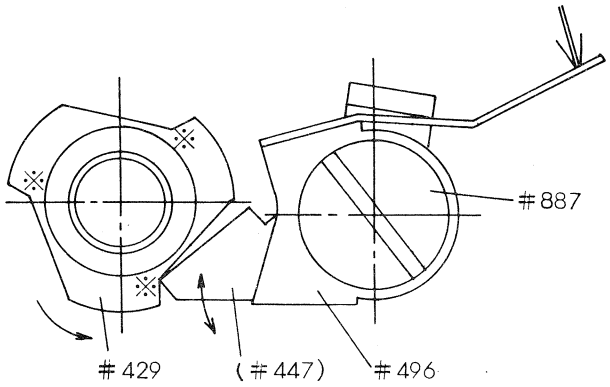

fig.11

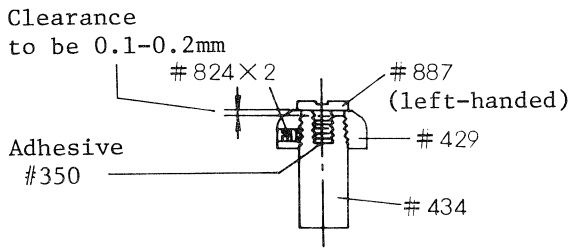

fig.12 Cross section of Sprocket shaft

Sprocket Positioning

Check to see if end of the sprocket teeth comes to the position as depicted in Fig.13,
with film-advance lever stroked by pressing the sprocket slightly by finger.
If improperly positioned, return the film-advance lever to the stand-off position. Then, applying a slight finger pressure on the lever, adjust #429 after loosening two screws(#824). See Figure 14.

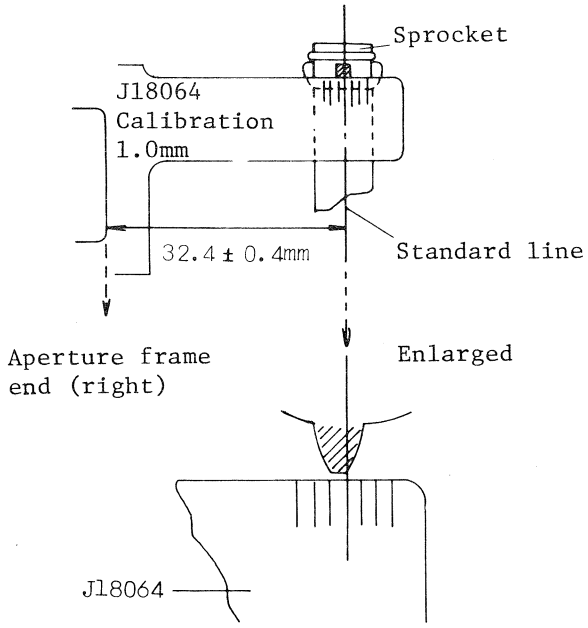

fig.13 the right tip of sprocket teeth to be on the standard line.

Measurement with J18064

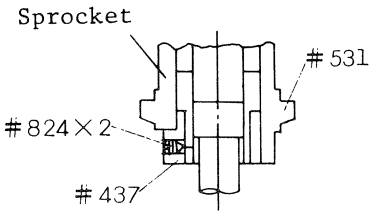

fig.14
Cross section of lower part of sprocket

10. Ratchet Cam, Pendulum Adjustment

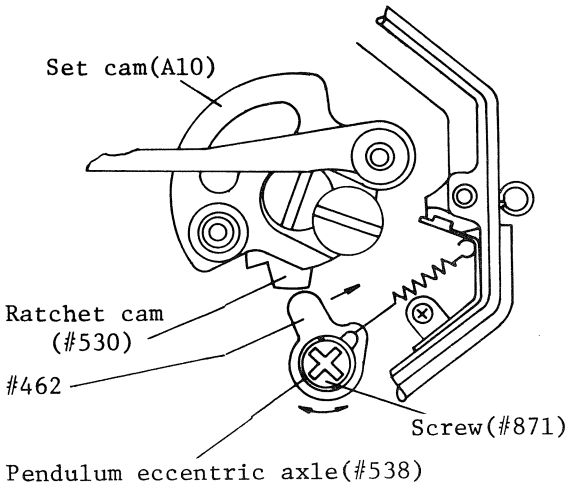

fig.14.Bottom view of wind-up mechanism

From when pendulum(#462) disengages from Ratchet cam(#530) until the film-advance lever is fully stroked, movement of ratchet cam should be within 0.2mm.

Loosen #871 and adjust #530 by rotating #538. Be sure to re-tighten #871. Make sure proper shutter cocking or wind-up operation when film-advance lever is stroked slowly or quickly, and weakly or strongly.

11. Shutter Charge Lever, Motor Coupling Installation

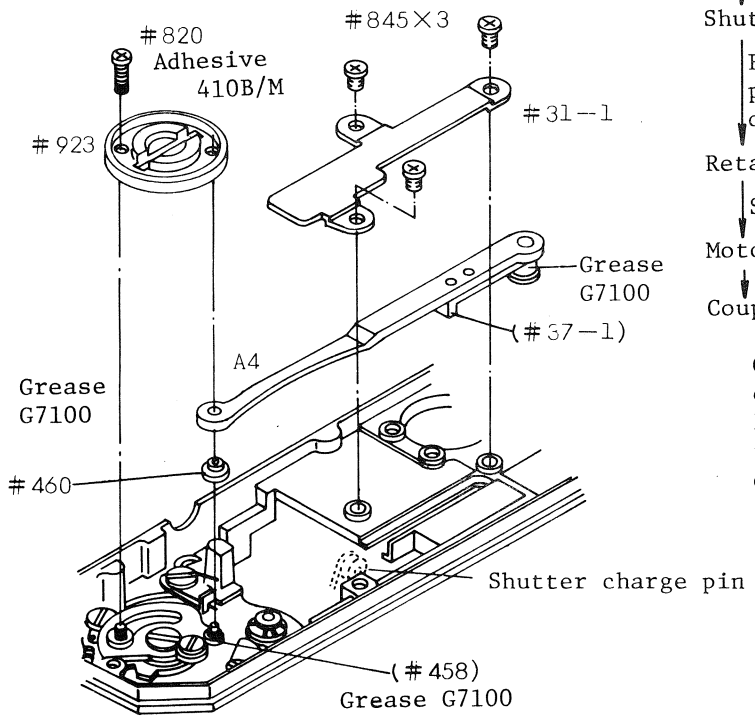

Set cam collar (#460)
↓
Shutter charge lever (A4)
↓ Fitting A4 onto #460, position #37-1 at right side of shutter charge pin.
Retaining plate(#31-1)
↓ Screw ⊕ #845x3
Motor Coupling(#923)
↓
Coupling screw(#820)

Check that shutter cocks certainly when film-advance lever is slowly stroked, and that set cam returns to its original position.

12. Charge lever, Motor Switch Coupling lever Installation

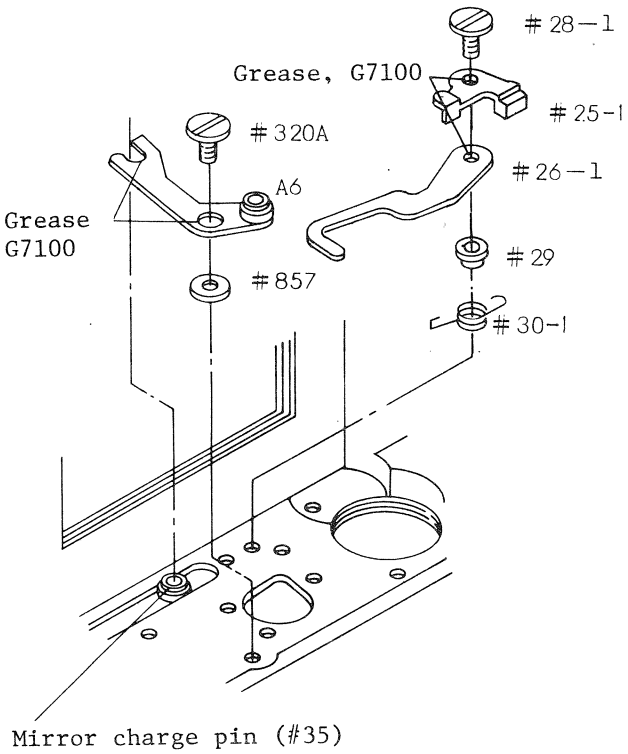

Body
↓
Washer(#857)
↓
Charge lever(A6)
↓ Place the fork of A6 to Mirror charge pin
Charge lever axle(#320A)
↓
Check lever axle collar (#29)
Signal lever spring (#30-1)
↓
Blank exposure preventer lever (#26-1)
↓
Motor switch coupling lever #25-1
↓ Up-down play to be 0.1mm
Signal lever axle #28-1

Check that #26-1 engages with Mirror charge pin collar #35 before pendulum gets free. after film-advance lever is returned slowly to its original position from the fully striked position.

Battery Case Installation

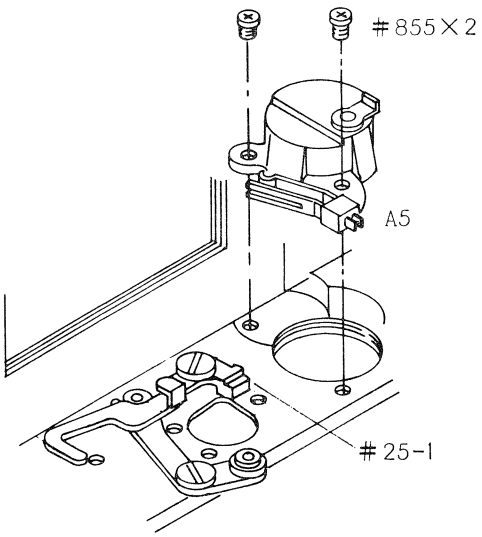

Body
↓
Battery case(A5) Screw(#855)

For MD winding switch adjustment, refer to (page 12)

Check MD winding switch not in contact with body die-casting.

13. Charge lever, MD take-up switch Adjustment

fig.15 MD take-up switch Operation

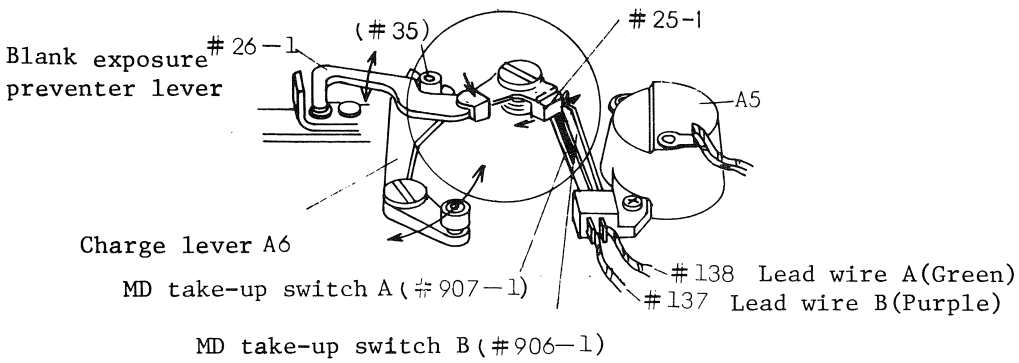

Fig.16 Film-advance completed.....MD Winding Switch turned OFF.

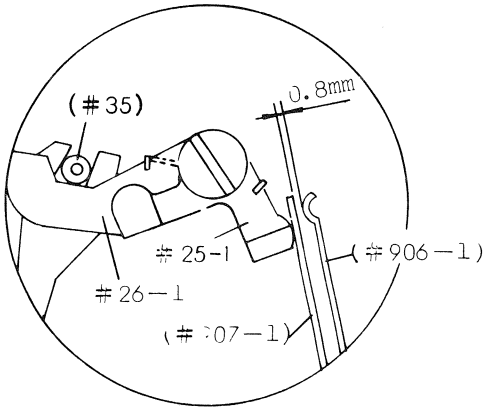

Check by gently operating A3 to ensure that #26-1 is pushed by #907-1 and contact against #35.

Bend #907-1 to a proper contact pressure

The clearance between #906-1 and #907-1 to be 0.8mm, adjustable by bending #906-1.

Fig.17 During film-advance operation...MD Winding Switch to be ON.

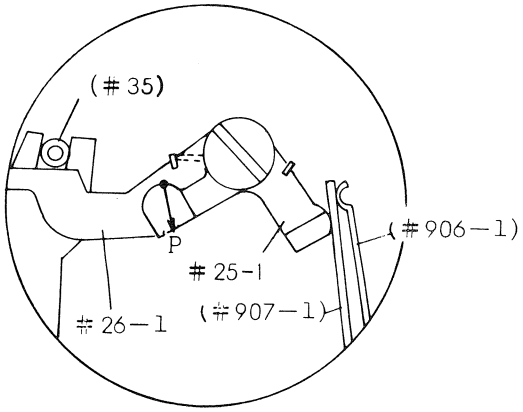

fig.17

Check that MD winding switch is on.

Set J5018 at P point (See figure 17) and measure spring pressure when #26-1 disengages from #35;

Spring pressure to be 75 to 100g

Adjust spring pressure by bending either #907-1 or #906-1

14. Front Plate (Screen Frame, Mirror Holder, Diaphragm set lever) Installation

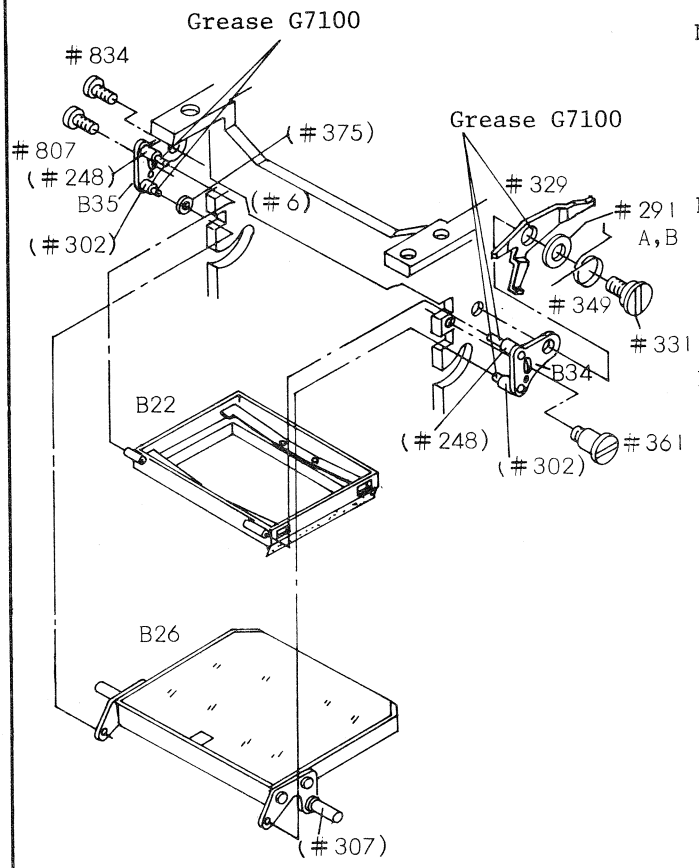

Front plate(#6)
↓
Screen Frame(B22)
↓
Mirror shaft stopper; rewind knob side(B35)

Insert #248 into the tube of B22 then tighten with screw ⊕ (#807) temporarily.

↓
Mirror holder(B26)

Install washer(#375) into Mirror holder shaft(#302). then install B 26 by alighning #302 into the hole of B26

↓
Mirror shaft stopper, advance-lever side(B34)

Insert #248 into the tube of B22 then tighten with screw ⊖ (#361)

↓
Mirror-up stop lever (#329)
Mirror-up stop lever spring(#349)
Screw(#331)

#329 is secured with washer (#291A, B).
Position #361 and #331 on top of oval hole in B34.
For spring installation, refer to the left-below illustratin.

↓
Screw(#834)

Both #807 and #834 to be positioned on top of oval hole in B35

Check that Screen frame(B22) surely drops of itself.
When screen lock spring(#240) is pulled and that B22 is locked firmly by #240.

For screen lock spring, refer to (page 30)
Check Mirror holder B26 for smooth operation

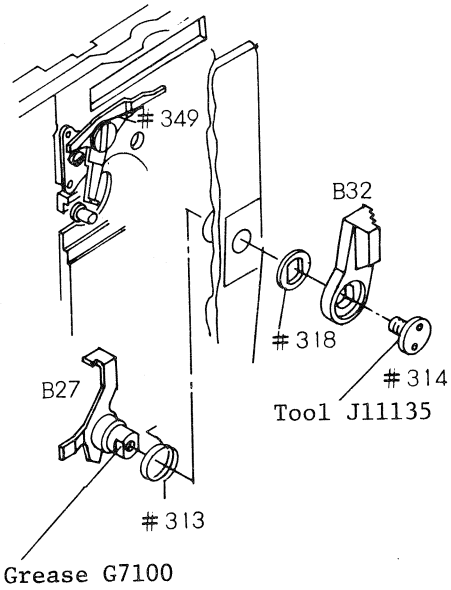

Front plate(#6)
↓
Stop-down lever spring(#313)
Stop-down lever(B27)

#313 installation illustrated in Fig.18.

↓
Stop-down lever washer(#318)
Diaphragm set lever(B32)

Install the both onto B27

↓
Screw(#314)

Check Diaphragm set lever.

Check Diaphragm set lever for smooth operation.
Thrust play of the lever to be within 0.2mm.

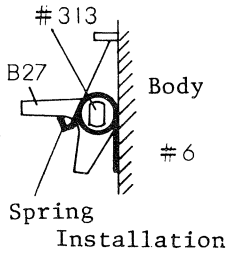

fig.18 #313 Installation

15. Front Plate (Mirror-up lever) Installation

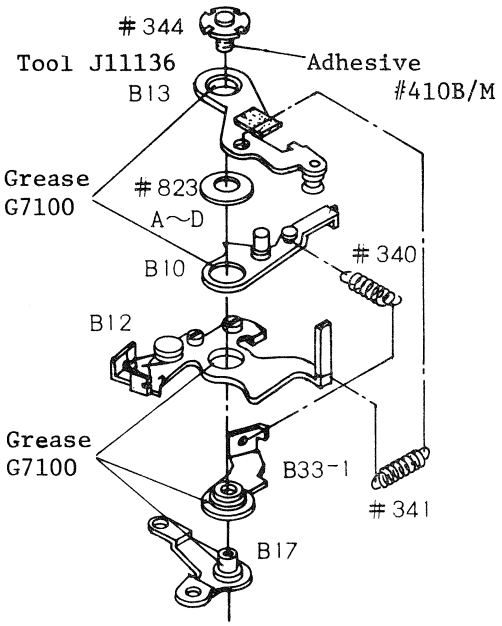

fig.19 Mirror-up lever Assembly

Mirror-up lever Assembly

Mirror lever shaft base(B17)
↓
Diaphragm spring stud (B33)
↓
Mirror-up lever(B12)
↓
Diaphragm actuating lever(B10)
Washer #823
↓ Remove looseness with one of #823A - D(t=0.05, 0.1, 0.15, 0.2)
Mirror-down lever(B13)
↓
Diaphragm lever spring(#340)
Mirror-up spring(#341)
↓
Mirror holder spring(#344)

Check each lever for smooth operation

Mirror-actuating mechanism installation

Front Plate
↓
Mirror-up lever assembly (fig.19)
↓ Install #378 and #379 on Pin A(#307)
Signal lever (#328)
↓ Tighten with screw ⊖ #357.
Check that #328 operates smoothly.
Shutter release collar (#320)
Shutter release spring (#348)
Shutter release lever (#321)
↓ Fix with screw ⊖ #877

For #348 installing, refer to P.(24)

Check #321 for smooth operation
Washer(#858)
Mirror down signal lever (B14)
Mirror-down latch lever (#330)
Screw ⊖ #291

Engage #289, referring to P

B14 should operate smoothly.

Check each lever for engagement, looseness and motion.

Refer to P. 24 Figure 37 for position of each spring and lever.

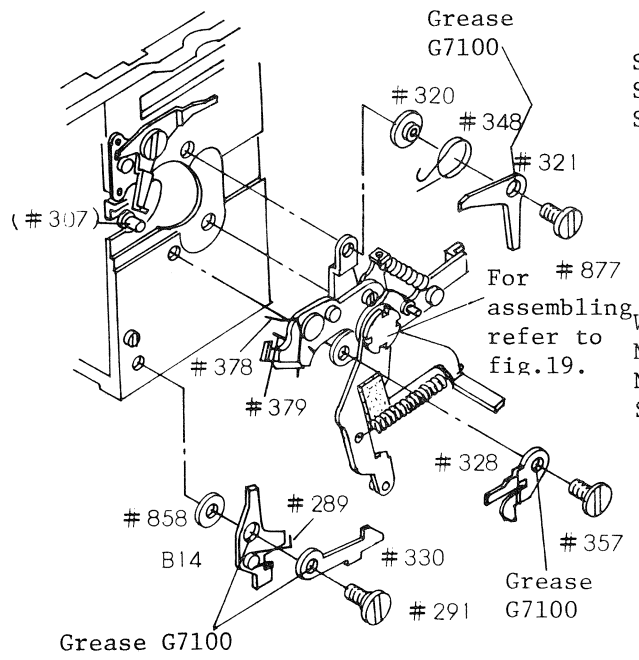

Front plate (Mirror Box), Wind-up side

16. Mirror Switch, Memory Switch, Self-timer lever installation

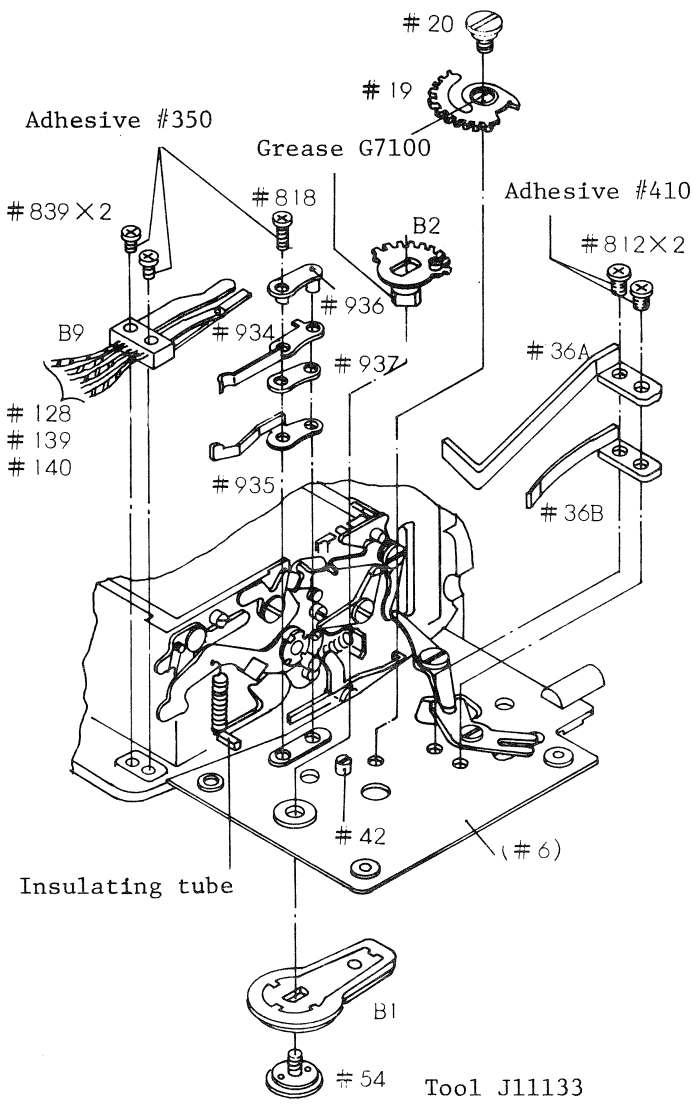

Front plate

↓ Install with mirror locked up.

Mirror switch(B9), Screw(#839)

Check shutter switch to be ON before installing.

Position the contact between Body die-casting and insulator tube, with care not to deform the contact. The contact should not touch #6.

Front plate

↓

Memory switch assembly

Memory switch B(#935)
Insulator B(#937)
Memory switch A(#934)
Insulator A(#936)

Tighten with screw ⊕ (#818).

#935 should not touch #6.

Don't finger-touch the contact

Self-timer lever assembly

Self-timer gear(B2)
Self-timer lever(B1)

Fix with Self-lever screw(#54) using screwdriver J11133.

Check thrust play to be within 0.15

Self-timer gear B(#19), Screw (#20)

For the engagement with B2, refer to fig.20.

Memory switch spring
Memory switch spring B(#36B)
Memory switch spring A(#36A)

Fix with screw ⊕ #812 x 2

For relative position, refer to fig.20.
#36A and #36B should be at the left side of #41.

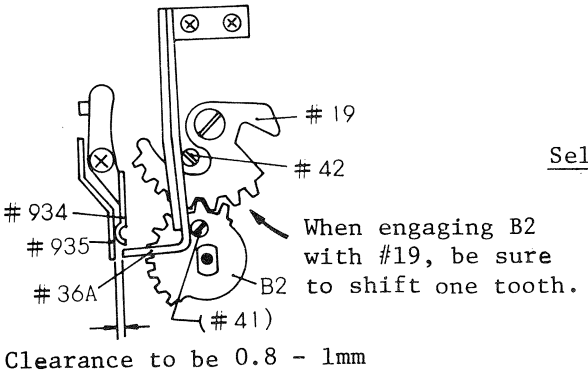

fig.20 Self-timer gear

Self-timer lever positioning

Self-timer lever should be vertical when Eccentric pin #41 contacts #36A. Tilt of the lever to be within 0.5mm to the right or left. Adjust by rotating #41.
Check the clearance between 36A and #935 to be 0.8 to 1.0mm. #935 should detach from #934 midway in turning self-timer lever toward memory-lock direction. Contact pressure of #935 to be 15g or more.

17. Front Plate (Mirror Charge lever, Down lever, Shutter brake) Installation

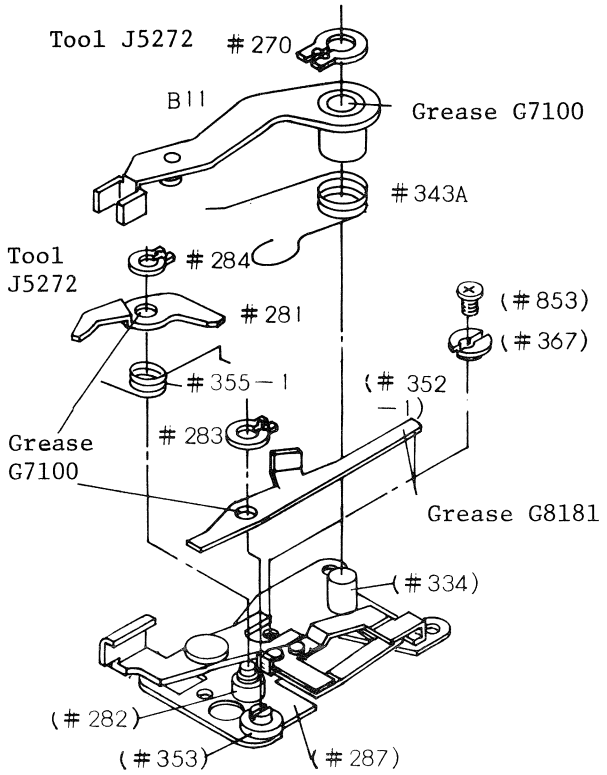

Mirror box base plate(#287)

↓

Down lever eccentric axle(#367)

↓ Screw ⊕ #853

MD signal middle lever(#352-1)

Install into #353, then secure with G ring (#283), rounded edge below as depicted in fig.21.

Check the play of the tip of #352-1 to be within 0.5mm. Ifexcessive, adjust by pressing down #283. Check for smooth operation.

Spring(#355)
Brake release lever(#281)

Install both parts onto brake release shaft(#282) and fix with #284. Install #284 and spring (#355-1) as depicted in fig.21.

The protrusion of #352-1 should not interfere with #284 when #352-1 gets into brake.

Check the play of the tip of #281 to be within 0.3mm.

Mirror-down spring(#343A)
Mirror charge lever(B11)

Install both parts onto Mirror charge lever axle(#334) and fix with #270. As for #343A installing, refer to fig.21. To tighten loose B11, pull down #270

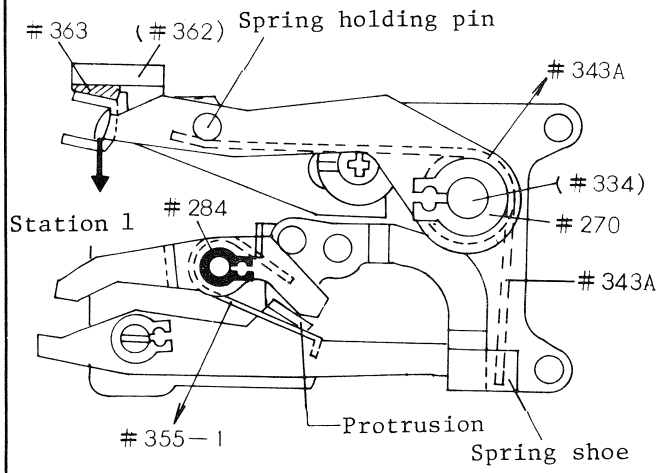

Detaching Power of Mirror Charge Lever (B11)

The power when B11 detaches from shock absorb rubber (#363) to be 180 to 220gms.

Measure the power with J15019 at the station 1 in fig.21, pulling in the arrow direction.

fig.21 Shutter brake assembly

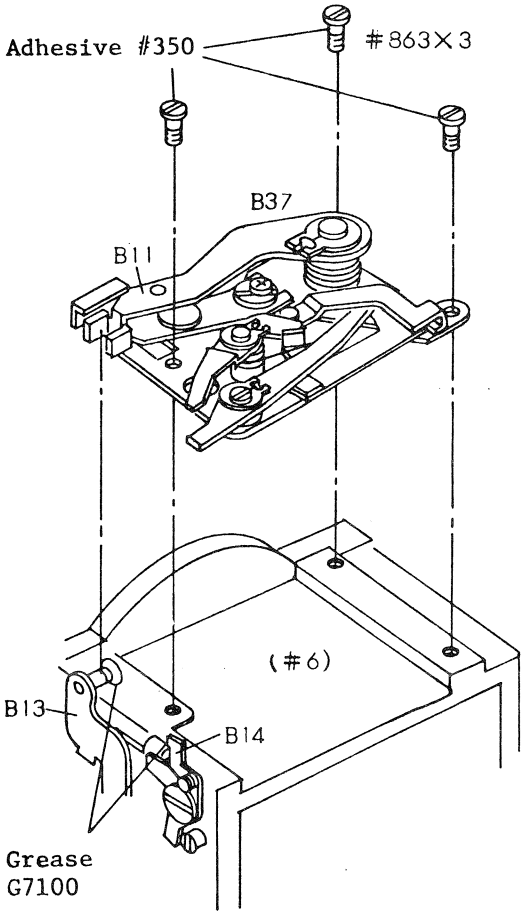

18. Shutter Brake B37 Installation

Front plate #6
↓
Shutter brake B37

Put #352-1 between Brake spring base #285-1 and Brake spring #286-1. Set Mirror-down lever B13 at down position, then engage with the fork of Mirror charge lever. (B11).
Fix with three screws (#863).

To position #352-1, pull out #352-1 from the brake spring and let #352-1 contact B14, then rotate #353 (see fig.22) until 1.0mm space is obtained between the tip of #352-1 and the bottom edge of #6.

Charge the mirror by B11, then release by B19 to check proper mirror-up operation

Set mirror at the down position by #328 and check a proper shutter brake operation.

Also check that shutter brake can be released by #281.

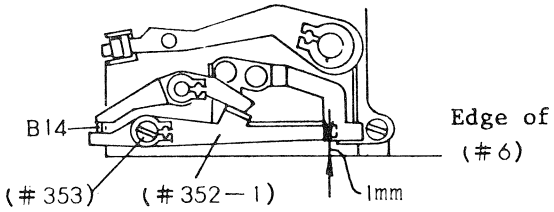

fig.22 MD signal middle lever(#352-1) positioning

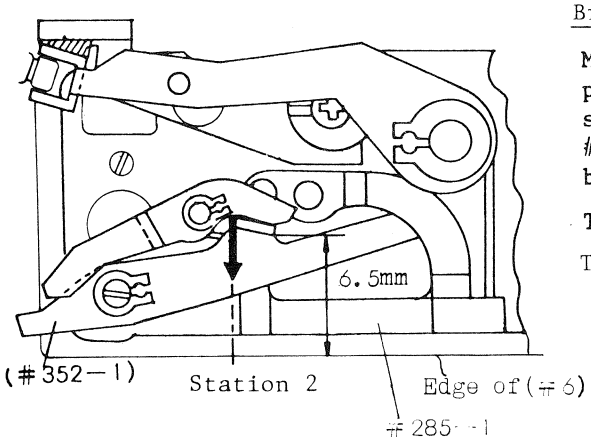

fig.23 Brake power measurement

Brake Power for Signal Middle Lever

Measure the brake power with J15019, pulling in the arrow direction at the station 2 where the bending edge of #352-1 locates 6.5mm up from the bottom edge of base plate (See fig.23)

The brake power to be 200g±50g

To adjust brake power, bend #284-1.

19. Mirror-switch adjustment

J19028-1

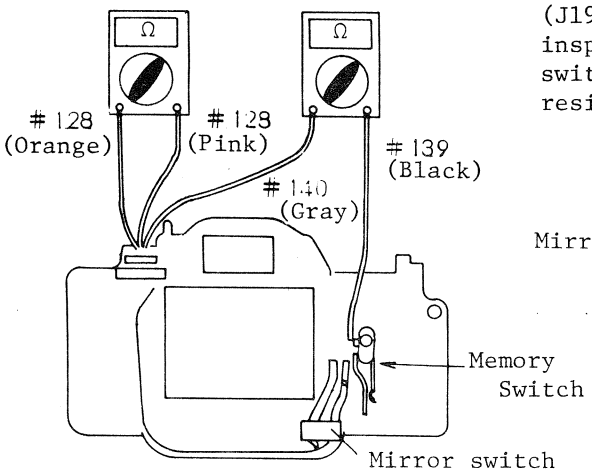

fig.24

Connect the lead wires with Contact efficiency & insulation tester IE-2A2 (J19028-1) as depicted in fig.24, and inspect on-off timings of both mirror switch and shutter switch. Electrical resistance of B9 to be 10MΩ or more.

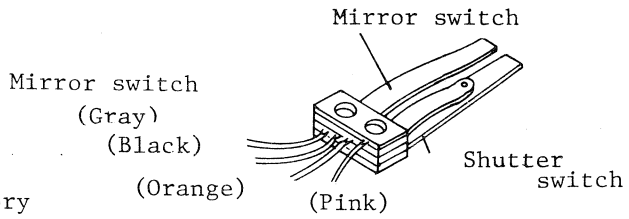

Mirror Switch B9

Switch ON-OFF Timing

After mirror charging, release mirror pressing B10 up by finger. lower B10 gradually. and adjust the clearance between #927 and #928 by turning #930 so that mirror switch changes from ON to OFF while on interval between Mirror holder pin A(#307) and Mirror-up lever(#322) is 0.2 to 0.1mm.
(Visually inspect the interval. Refer to fig.25. 26)
Apply adhesive #201 onto #930.
Be sure not to tighten #930 excessively.
Visually check that shutter switch changes from OFF to ON while #307 is shifting up 1.1mm away from its contacting point with #322 (no clearance between the two) (See the chart below)

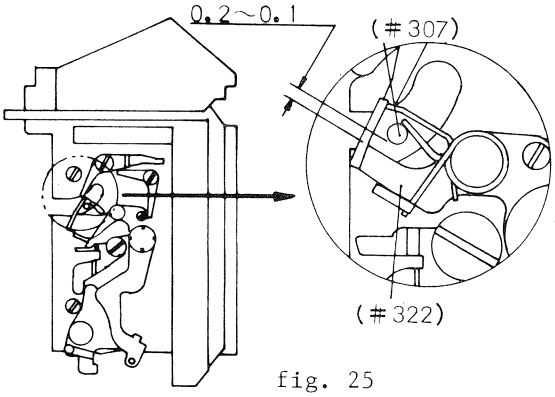

fig. 25

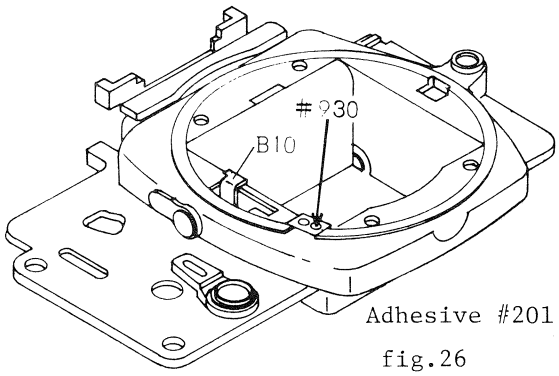

fig.26

Position of Mirror / Switch	down-position	During mirror-rising operation				up-position	return to down-position
		-0.2 (#322)	-0.2 (#307)	0	+1.1		
Mirror Switch	ON	ON → OFF		OFF			ON
Shutter Switch	OFF			OFF → ON		ON	OFF

20. Air Damper installation

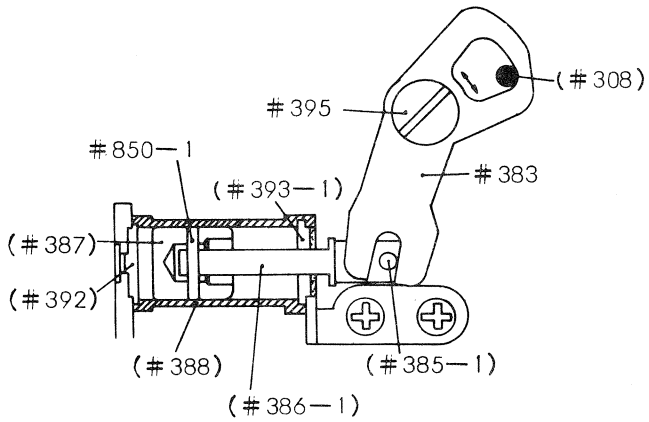

fig.27 Strucrure of Air Damper

Air Damper Mechanism(B20)

Shock and sound, which occures at the mirror up or down position striking the associated parts, are minimized by cylinder operation of B20 via #383 which actuates air damper connecting shaft (#386-1) fore and aft by receiving the shock of mirror operation.

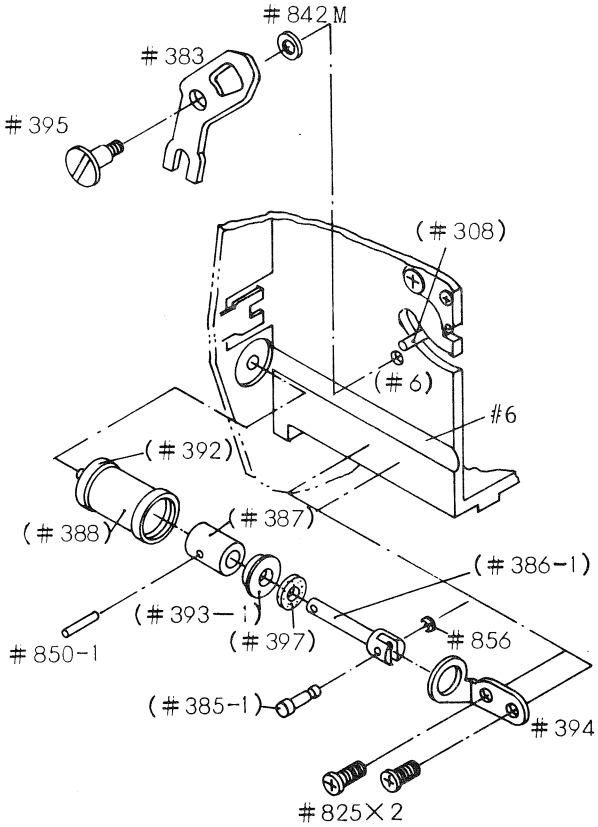

20. Air Damper Installation

Front plate(#6)

↓

Air damper(B20)

Put #385-1 into #386-1 and fix with #856 as illustrated. Install #397, #393 and #387 in order onto #386-1, then insert #850-1 into #386-1 through #387 aligning two holes.
Insert the above assembly into #388, using care not to drop #850-1.

↓

Air damper holder(#394)

⊕ #825x2 (used for centering)
Position #388 along groove of #6

↓

Washer(#842M)
Air damper lever(#383), ⊖ #395

Put the fork of #383 astride #385-1, and angular hole of #383 around #308 respectively.
Manually operate the mirror and check for smooth operation of mirror, free from air damper's rubbing or jam.
Change the direction of #6 and check mirror operation again.

21. Roller lever(B7), Brush coupling gear(B25) Installation

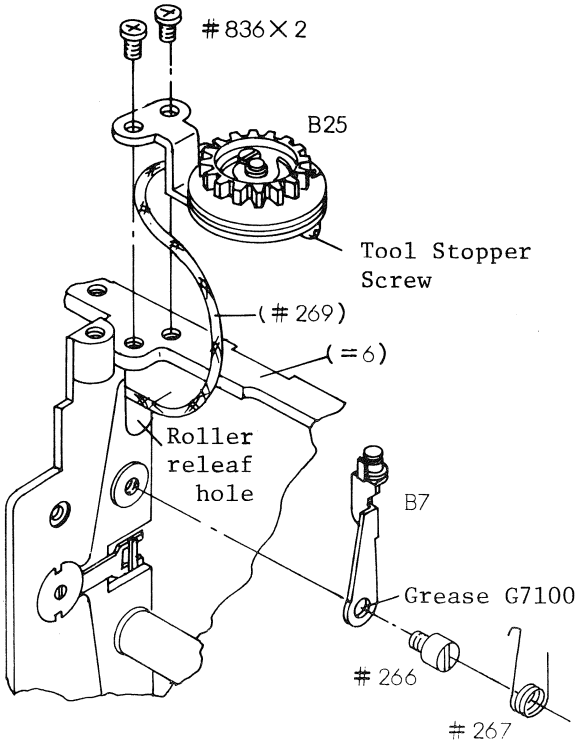

Front plate(#6); rewind-side

Front plate #6

↓

Roller lever B7, Screw(#266)

B7 should not interfere with #6 due to excessive back-and-forth play

↓

Roller lever spring(#267)

Refer to fig.28 for spring installation.

↓

Brush coupling gear(B25)

Before installing, inspect for smooth operation and no abnormal sound of spring.

Pass thread #269 through roller releaf hole on #6, using care not to reduce the ring of 2mm dia at the end of #269

Install #269 between Roller(#262) and thread retaining plate(#264). (See fig.28)

↓

⊕ #836x2

Be sure not to remove tool stopper screw before Bayonet #202 is installed.

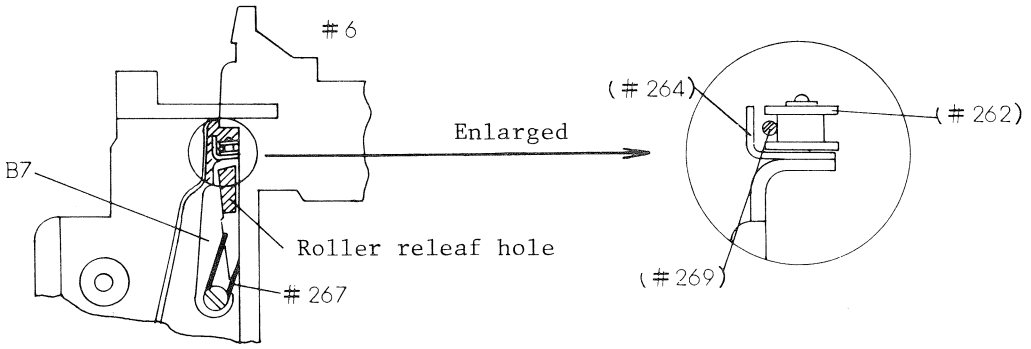

fig.28 Back view of Front plate #6; rewind-side

Thread(#269) knotting

If #269 is unknotted, knot as depicted in fig.29, using care to tighten the knot securely.

The length of #269, from the cut in pulley on B25 to the knot to be 116±0.5mm

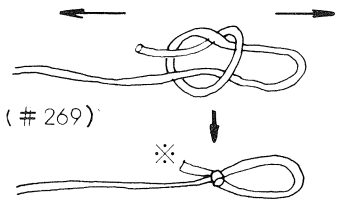

fig.29 #269 knotting

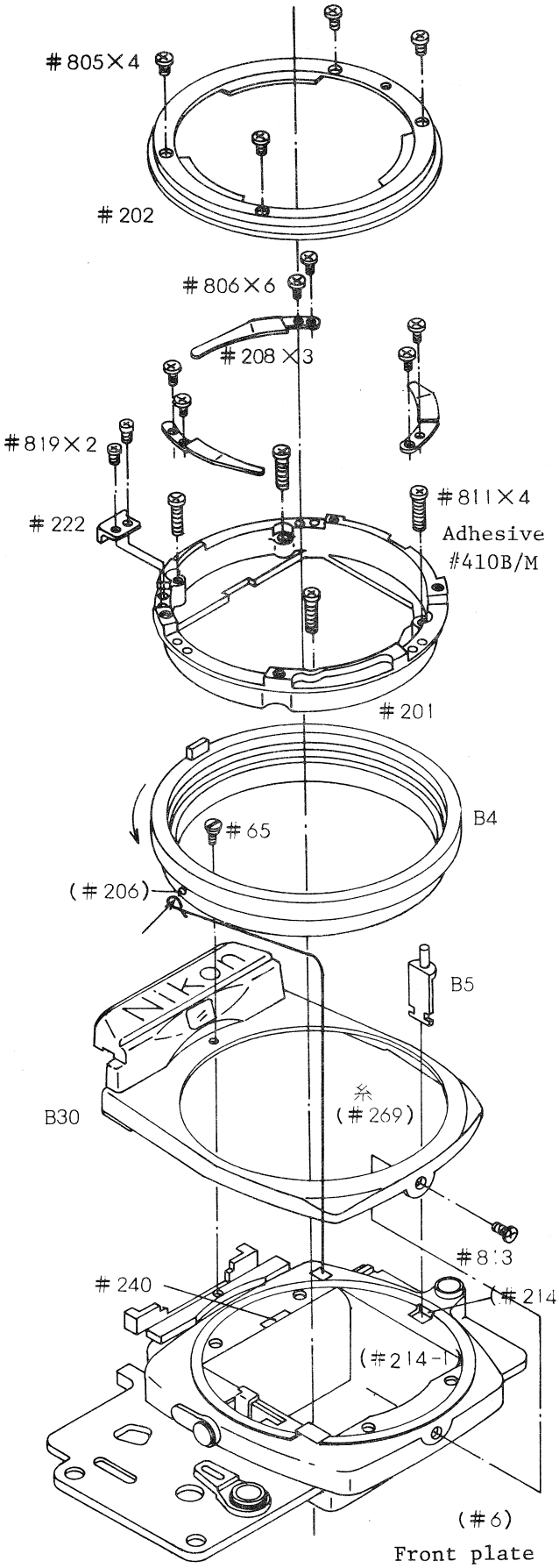

22. Bayonet Installation

Front plate(#6)

↓

Front cover(B30): ⊕ #813x1
⊖ # 65x1

↓

Aperture coupling ring(B4),
Lens release lever(B5)

Insert B5 into fork of #214-1
Install Thread(#269) securely
into the groove of thread
supporting pin(#206).

↓

Bayonet mount(#201) ⊕ #811x4

Use care not to catch thread
Temporarily loose fit with
screw

↓

Coupling ring stopper(#222)
⊕ #819 x 2

Turn B to the position where
#222 can fit in B4, and hold
with finger

↓

Screw (⊕ #811)x4

Secure #201 tightly where B4
rotates most smoothly

↓

Bayonet spring(#208), ⊕ #806x6

Position #208 flush with outer
circumference of #201 or at
least 0.2mm inside.

↓

Bayonet #202, ⊕ #805x4

Check B4 for smooth rotation

↓

Remove tool stopper screw
(See fig.30)

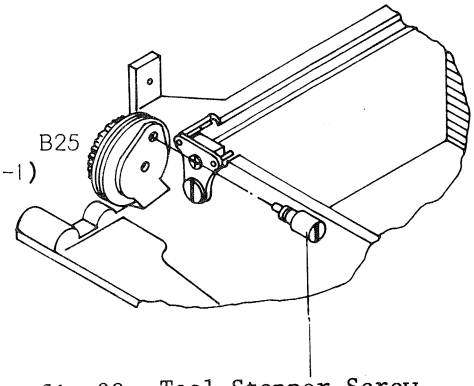

fig.30 Tool Stopper Screw

23. Aperture Coupling Piece Positioning

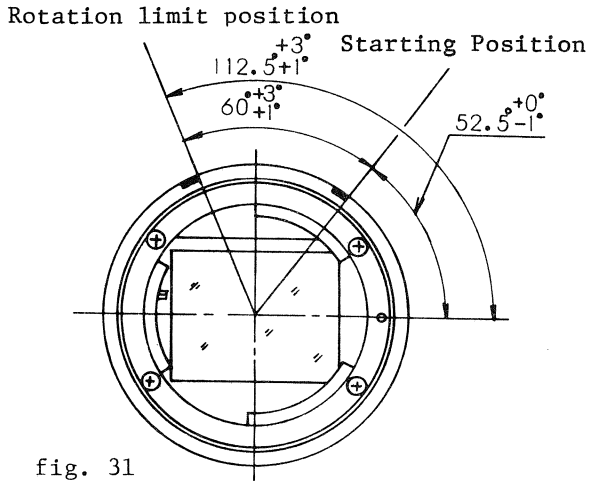

fig. 31
Positioning standard of aperture coupling ring

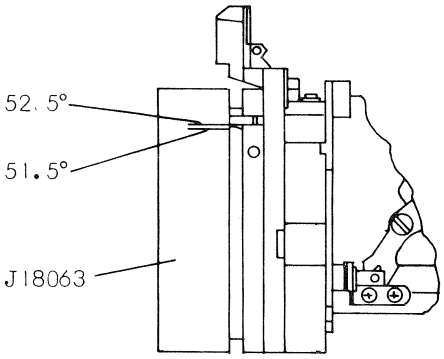

fig.32
Aperture coupling piece starting position

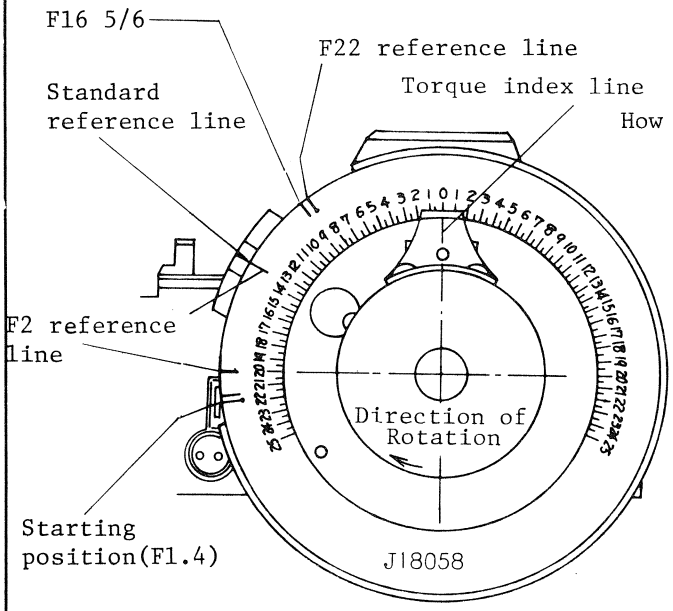

Standard for Aperture Coupling Piece Starting Position and Maximum Angle of Rotation

Starting position: 52.5° $^{+0°}_{-1°}$

Maximum angle of rotation: 112.50 $^{+3°}_{+1°}$

Tool: J18063

Refer to Figure 31

Starting position checking

Mount F-number window checking gauge (J18063) onto bayonet.

Check that the right edge of #209 (lens release pin-side) is between two scales (52.5° & 51.5°) on J18063. If out of the scales, adjust by dislocating #222.

Refer to fig.32 and Page(22).

Torque Standard

When rotating toward F22

at F16 5/6: 950g·cm or less

When rotating back toward max aperture

at F16 5/6: 350g.cm or less

at F2 : 100g·cm or less

F1.4 reference line should surely return to align with the standard reference line.

How to measure

Mount the tool No.J18058 onto the bayonet. Align each reference line with the standard reference line, then rotate the tool's ring further to measure the torque when two lines separate.

24. Diaphragm actuating lever positioning

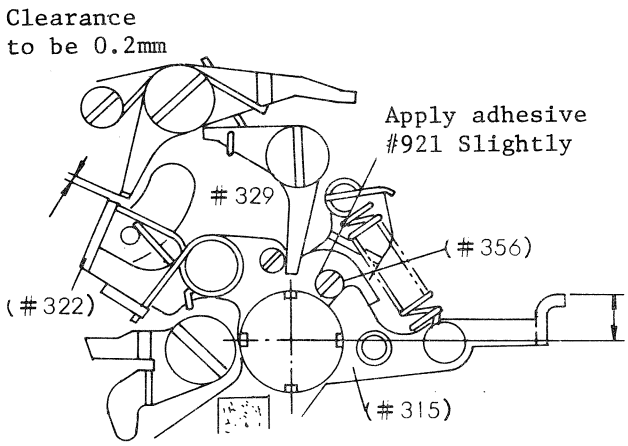

fig.34 Side View of Front Plate; Wind-up side

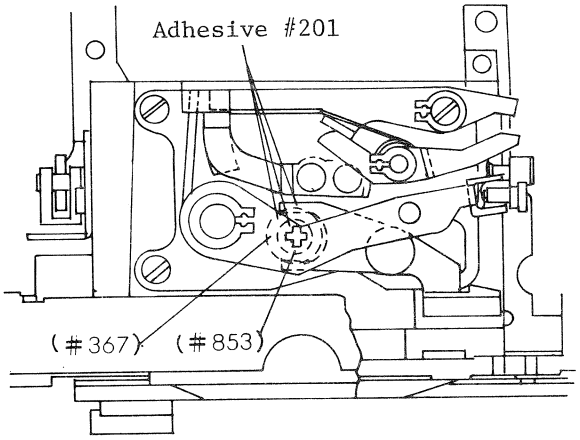

fig.35 Bottom view of Front Plate

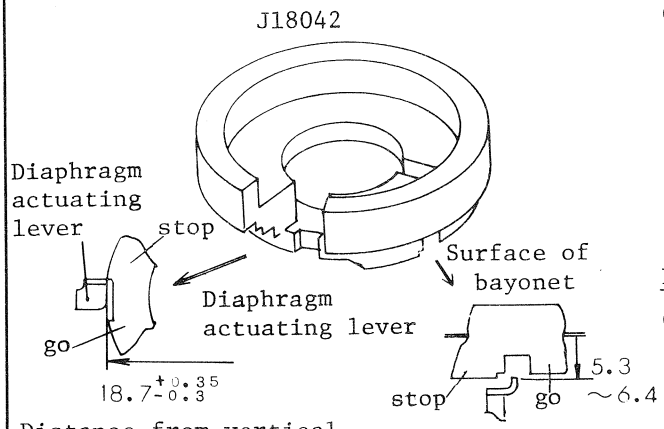

Distance from vertical center line: $18.7^{+0.35}_{-0.3}$ mm

Depth from bayonet surface: 5.3-6.4mm

fig.36

Height of Diaphragm actuating lever

Measure the height of Diaphragm actuating lever with Aperture lever positions gauge (J18004)
See the illustration below

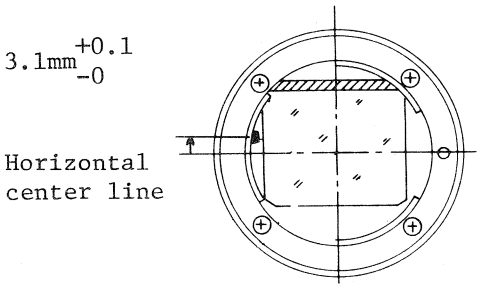

(1) Standard height when mirror charged

$3.1^{+0.1}_{-0}$ mm

If out of standard, adjust by rotating Eccentric pin #356 (See fig.34)

After adjustment, slightly apply adhesive #921 to #356. Use care not to exude adhesive to #315

(2) Standard height when mirror released

$3.1^{+0.4}_{\pm 0.15}$ mm

If out of standard, loosen #853 and adjust by rotating Down lever eccentric axle(#367).(See fig.35) Apply adhesive to #353, #362, and #367 respectively.

(3) The difference between the above two values (1), (2): 0.15mm or more

Be sure to provide 0.2mm clearance between Mirror-up lever(#322) and Mirror-up stop lever(#329) in normal mirror down position. See fig.34.

Position of Diaphragm actuating lever

Check the distance from vertical center line and the depth from bayonet surface with Aperture lever depth gauge J18042 (See fig.36)
The tip of diaphragm actuating lever should contact the "stop" side of J18042, and should not contact with "go" side.
Adjust the lever position by bending Diaphragm actuating lever.

25. Front Plate Installation

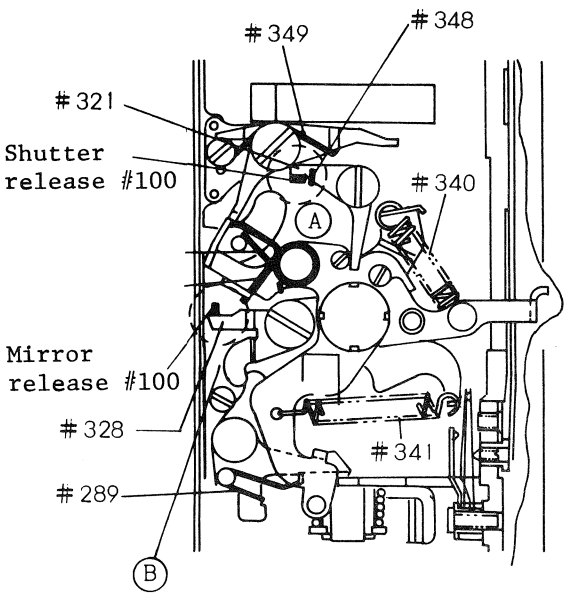

fig.37 Front plate, Mirror box side

Body

Cock the shutter, release the blank exposure prevention lever and set the film-advance lever halfway in the winding direction before front plate installation.

Front plate

Charge the reflex mirror

Install Front plate, being careful to ensure proper engagement at the areas (A, B, C, D, E, F) specified in Figure 37, 38, 39.

Engagement

A { Shutter release lever(#321)
Shutter release of #100

B { Signal lever(#328)
Mirror release of #100

C { Release lever guide pin(#879)
Sea-saw lever(#518A)

D { Self-timer gear B(#19)
Self-timer shaft of #100

E { Brake release lever(#281)
Mirror charge pin collar(#35)

F { Motor switch coupling lever(#25-1)
MD signal middle lever(#352-1)

Press front plate in the arrow direction in Fig.40, and secure with six screws (#810x5, #817x1) in the sequence shown in Figure 40.

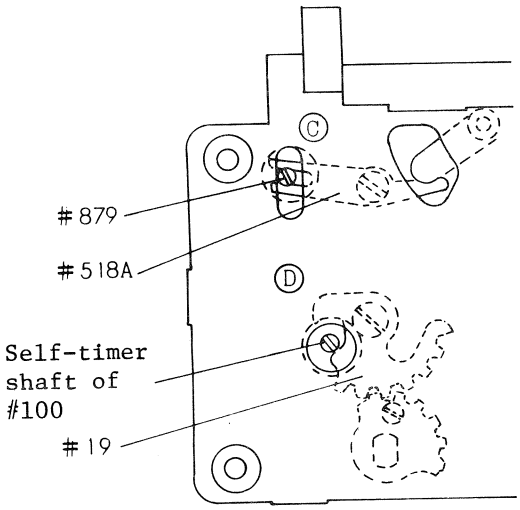

fig.38 Front plate, self-timer side

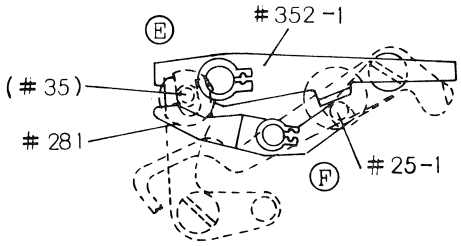

fig.39 Front plate, body bottom

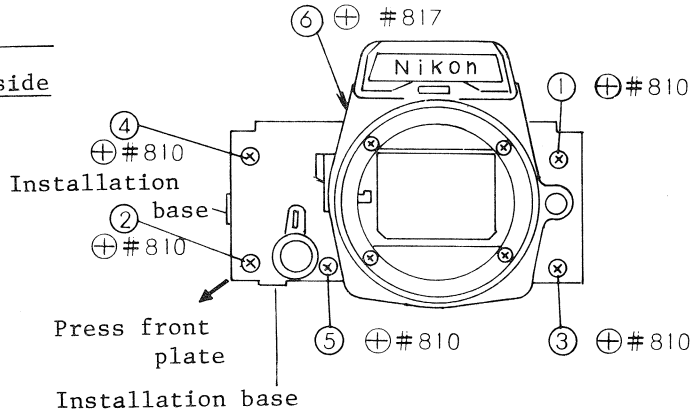

fig.40 Screw tightening sequences ① - ⑥

26. Mirror Position to Release Shutter

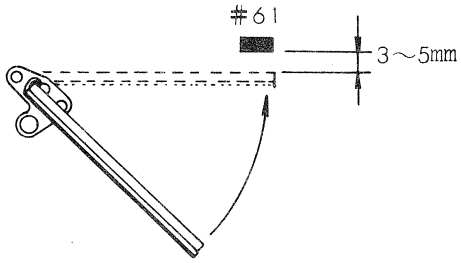

fig.40

Clearance of 3 - 5mm should be left between mirror buffer #61 and the mirror in the highest position to release shutter.(See Figure 40)

Be careful not to scratch or leave finger prints on the mirror

Adjust the mirror position by activating shutter release lever (#321) up and down with eccentric pin(#356).
(See Figure 41)

Apply adhesive on #356, being careful not to exude the adhesive on #321.

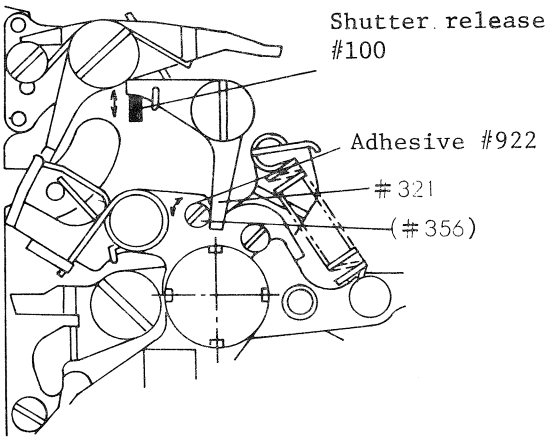

fig.41 Front plate, film-advance lever side

ⓐ looseness: within 1.0mm
ⓑ Inclination: within 0.5mm

27. Inspections after Front Plate Installation

Body Back Distance Check:

Tools: J18001-1, J19004
Standard: 46.67± 0.02mm(at outer rails)

Self-Timer Lever Operation Check:

8 - 14 sec. delay: Adjust with eccentric pin shown in Figure 42.
Cancellation: Cancellable when the lever is returned to the position ready for memory lock operation

Lever looseness: Within 1.0mm
(See Figure 42)

Blank exposure prevention lever check:
Inspect #26 and A3 for proper operation through tripod screw mounting hole.

Mirror charge check:
Attach the tool(J18065), set its aperture setting to F16 and wind the film-advance lever several times, fast or slowly;
mirror should be surely charged regardless of winding speed.

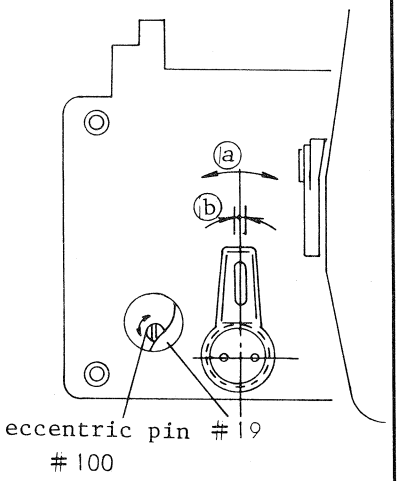

fig.42

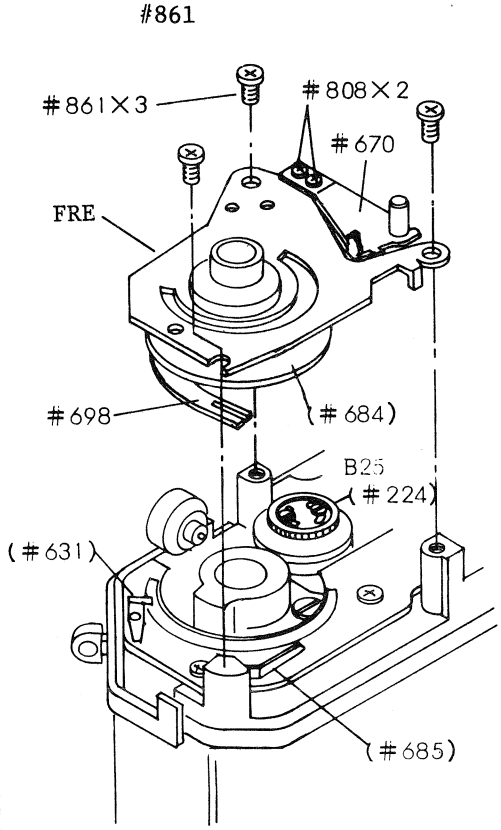

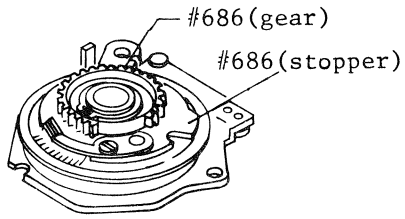

fig.43 FRE, bottom view

Digital Volt-Meter (J9003-1)

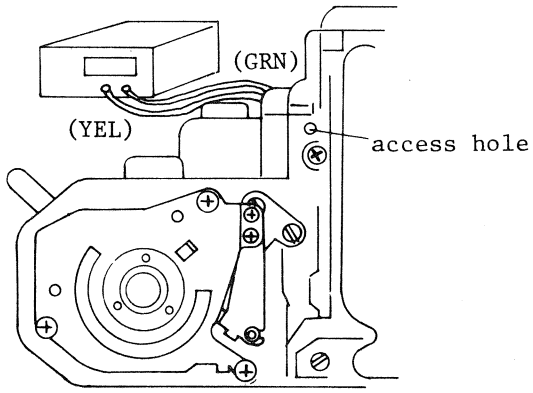

fig.44 Body, rewind-knob side

28. FRE Installation

Cares before installing FRE
Properly position B25 with tool J15146, removing slack.

Alcohol-clean each contact below

Body: Brush A(#685)
FRE Printed Circuit(J)

FRE: Brush B(#698)
FRE conducting plate

Body
↓
FRE: Install lens tool(J18065), set its aperture ring at the click between F1.4 and F2, and install FRE with three screws #861 so as to leave no clearance between #631 and #686.
(See Figure 43, 45)

Be careful not to bend #685 and #698

Check Points

Rotating the aperture ring of J18065, inspect the gear slack between #224 and #686 to be within 1/6 EV (0.15k) deviation with tester J9003-1. If eccessive, shift FRE position until allowable slack obtained. If still excessive, readjust the B25 positioning.

Brush A(#685) should contact #684 at the middle of the circumference of #684

#631 and #678 should not contact each other. (See Figure 45)

Roller lever(B7) should not move before #686 contacts #631. Inspect through access hole in Fig.44.

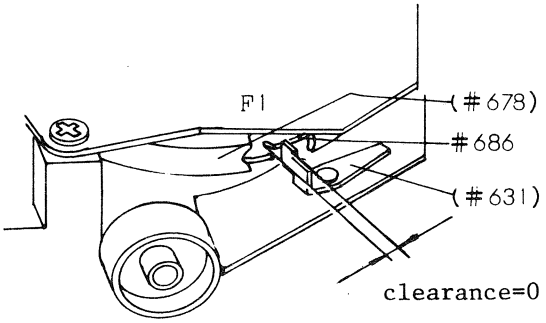

fig.45 Synch terminal

29. FRE Positioning

Aperture ring of J18065

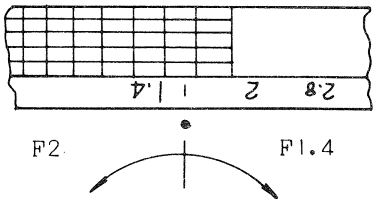

Brush gear(#686) should move instantly

#686 should not move

fig.46 1/3 stop click(F1.4 1/3)

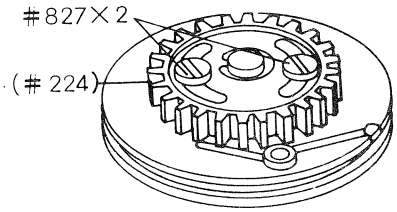

fig.47 Brash coupling pulley

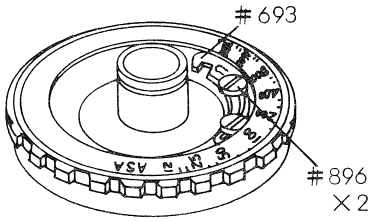

fig.48 ASA dial

Body

Mount the tool J18065 on the body and rotate the aperture ring from F1.4 toward F2 to set to the click, 1/3 stop exceeding F1.4.
See Figure 46

Check Points

When rotating back to F1.4, #686 should not move, which means no clearance left between #631 and #686

When rotating toward F2 out of 1/3 click stop, #686 should immediately move. If improper operation observed, remove ASA click spring(#670) and two screws(#808), loosen two screws(#827) and adjust the positioning of #224. If still unsatisfactory, readjust FRE positioning to set the slack between #224 and #686 within 1/6 EV deviation.

30. FRE Resistance Adjustment

Connect leads #130(yellow, green) to tester J19003-1 as illustrated in Figure 44. Measure the resistance at the settings shown in the table below.

If out of standard, slide ASA coupler(#693) by loosening two screws(#896) until standard resistance obtained.

Check Points

FRE resistance should vary smoothly free from needle jumping.
One stop difference = 0.9kΩ

Resistance should be within standard,regardless of rotational direction of aperture ring

Note: When changing ASA setting, depress the checker switch so as not to contact against FRE.

FRE resistance standard

	Aperture	ASA	Compensa-tion	Standard (kΩ) upper limit	Center	Lower limit
1	1/3 click	4000	-1		0.45	
2	1.4	4000	-1			
3	2	4000	-1	1.15	1.05	0.95
4	5.6	4000	-1	4.2	3.75	3.3
5	5.6	100	0	10.4	9.45	8.4
6	2.2	12	+2	< ∞	16.65	14.9

Note:
1) No resistance difference permissible between 1 & 2
2) Resistance difference between 2 & 3 to be 0.6 ±0.1KΩ

31. FRE Installation

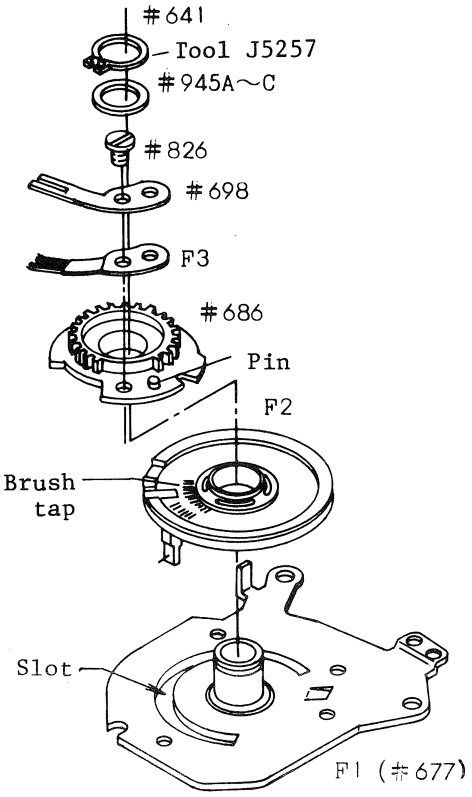

To Install Brush

ASA dial mount (F1)
↓
FRE ring(F2)

Be careful not to directly touch FRE pattern
Clean the tapped area with a mixture of alcohole and ether

↓
Brush gear(#686) Washer(#945 A, B, C)
Snap ring(#641)
#686 should rotate smoothly by adjusting with one of #945A, B, C
↓
Brush A(F3), Brush B(#698) Screw(#826)

Set #698 on top of F3 and install both together, aligning the holes with pin on #686

All of six wires of F3 should firmly contact on taps of F2. (Ref. Figure 49)

Two contact plates of #698 should not disengage from FRE printed circuit (J)

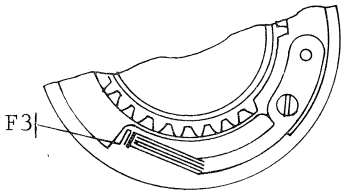

fig.49 F3 position

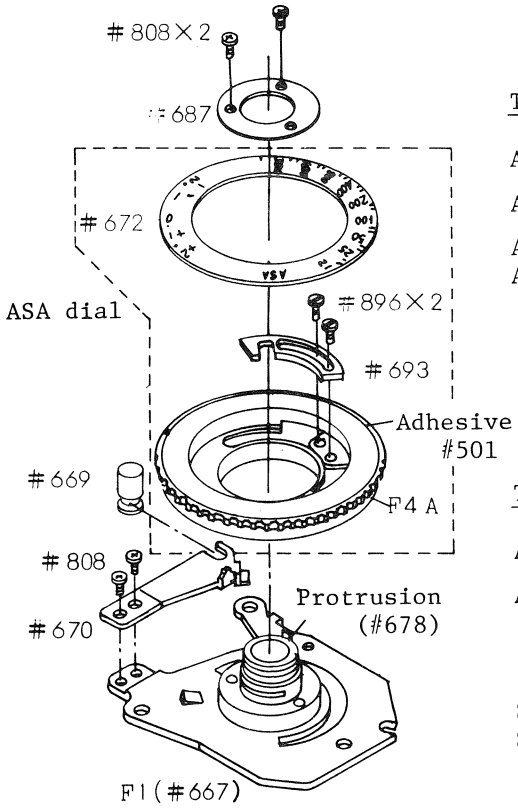

To Install ASA dial(#672)

ASA dial(F4A)
↓
ASA coupler(#693), Screw(#896x2)
↓
ASA dial (#672),
Adhesive #501

Setting ASA click plate (#676) at the center click, fix #672 with its "0" setting aligned with the index.

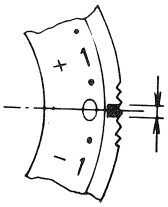

To install ASA dial (F4)

ASA dial mount(F1)
↓
ASA dial(F4A), #896x2, #693, #672

Protrusion on #678 to be aligned with the slot in #693

↓
Scale attaching ring retainer(#687), Screw(#808x2)

Inspect #687 for smooth rotation

32. Installation of Pentagonal Prism, Eyepiece and IC Printed Circuit

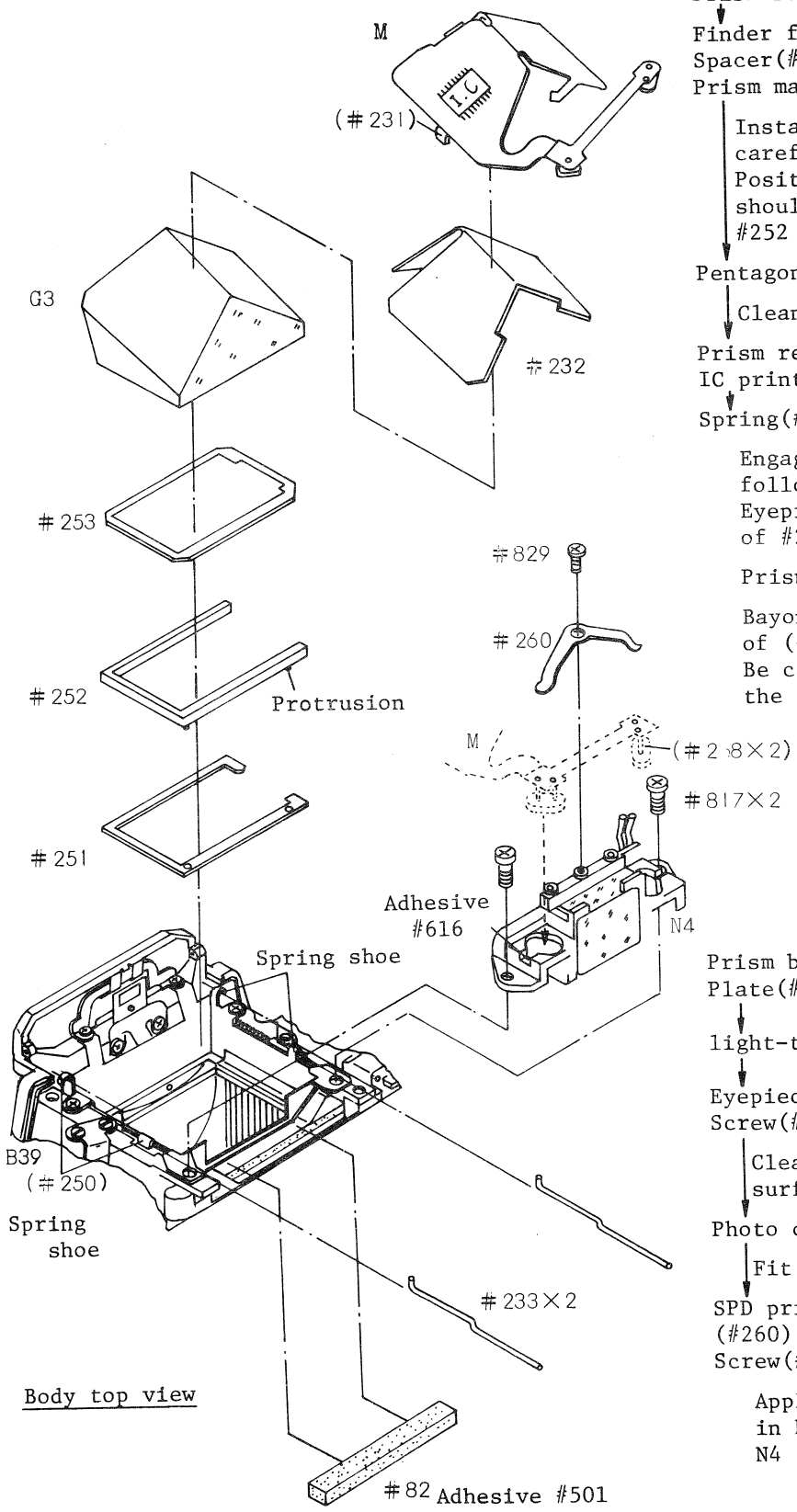

Prism box(B39)
↓
Finder field frame(#251)
Spacer(#252)
Prism mask(#253)

Install each part, being careful of their direction. Positioning holes in #251 should align with pins on #252

Pentagonal Prism(G3)

Clean before installing

Prism retainer(#232)
IC printed circuit(M)
↓
Spring(#233x2)

Engage the spring in following sequences.
Eyepiece-side spring shoes of #250
↓
Prism-retaining plate(#231)
↓
Bayonet-side spring shoes of (#250)
Be careful not to scratch the prism.

Prism box(#250) of Front Plate(#6)
↓
light-tight(#82)
↓
Eyepiece mold(N4),
Screw(#817)

Clean the prism-side surface of eyepiece lens

Photo diode(#258x2)

Fit into holes in N4

SPD printed board retainer (#260)
Screw(#829)

Apply adhesive at the cut in N4 to secure #258 on N4

33. Fresnel Screen and Mirror replacement

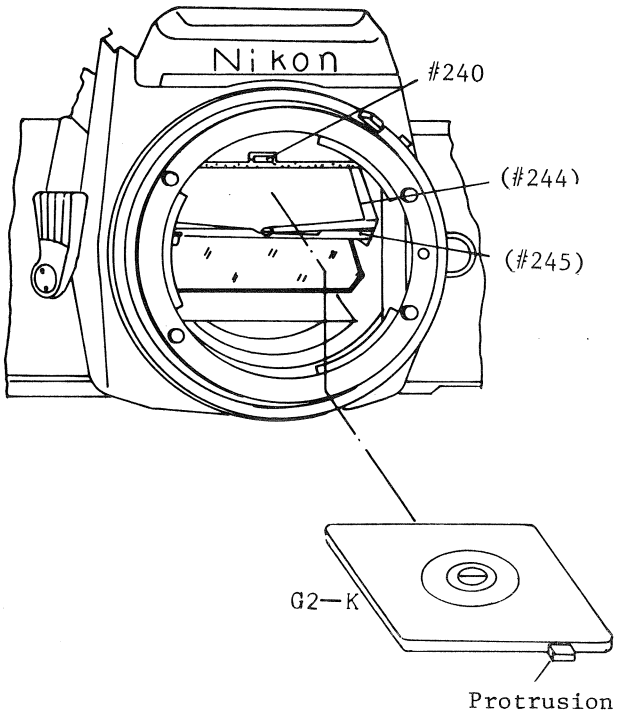

To replace Fresnel screen(G2)

To remove G2, pull screen lock spring(#240) toward you, and screen frame(#245) falls down, ready for G2 removal

Hold the protrusion on G2 with tweezers to prevent G2 from scratch.

Cleaning G2, place G2 on #245 with split plane up and the protrusion toward you.

Press up #245 until #245 locked with #240, being careful of G2 not to disengage from screen frame spring (#244).

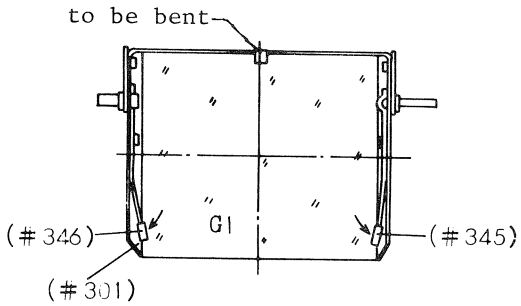

fig.51 Mirror holder B26

To replace mirror(G1)

Remove Mirror(G1) by pressing mirror holder A(#345) and B(#346) with a small screwdriver in the direction of arrow (See Fig.51).

Reinstall G1 in place as follows. Clean the faying surfaces of G1 and mirror holder(#301)

↓

Apply adhesive #501 at two places on #301 (See Fig.52)

↓

Place mirror in place

Be careful not to transform #345 nor #346 and not to scratch mirror

To make sure the proper mirror installation, look through view-finder for blur-free image at four corners.

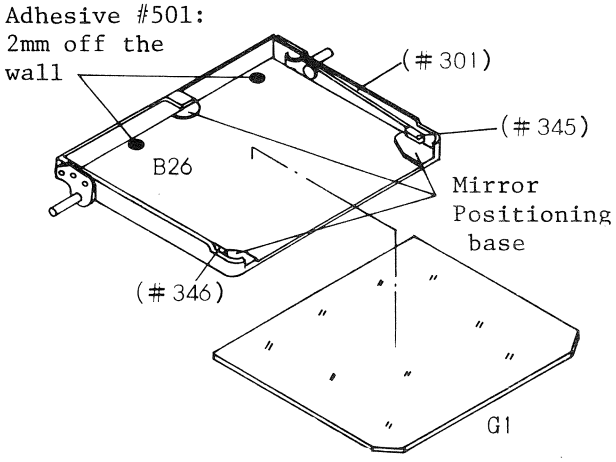

fig.52 Mirror replacement

34. Adjustment of Mirror 45° angle, Infinity focus and Picture Angle

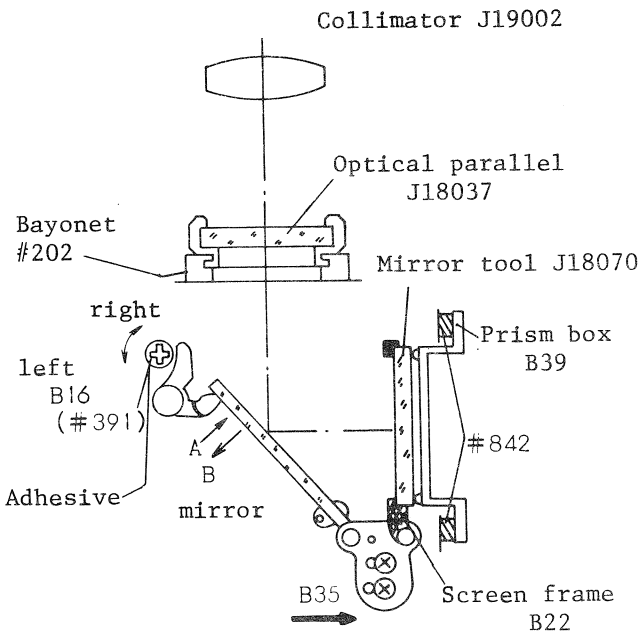

fig.35 Mirror positioning(FRE-side view)

To adjust mirror 45° angle

Tools: Optical parallel J18037
mirror tool J18070
Collimator(f=500mm) J19002

Set J18037 on bayonet, install J18070 in screen frame (#245) and look through collimator J19002 to see if the images both on J18037, and on J18070 align. If not aligned, adjust as explained in table below. After adjustment, apply adhesive #501 on #391.

Note: 1) Place the camera back on the work surface with body top toward the collimator's post. If camera positioning is wrong, images in the collimator will be varied.
2) Image view should not vary in several shutter releasing, nor before and after shutter cocking.

Mirror 45° Adjusting Table:

	Upper	Lower	Left	Right
—— Image A ▬ Image B	down	up	right	left
How to align Image B on Image A	Rotate #391 clockwisely, and mirror moves in B direction	Rotate #391 counterclockwise, and mirror moves in A direction	Add #842F washer to #842 at two positions on FRE side, but one only at each place	Move B35 in the direction of arrow

Image A——: Image on J18037, Image B ▬ : Image on J18070

To adjust infinity(∞) focus

Tools: Lens tool 50mm F2(J18010), Collimator f=600mm(J19001)
Standard: Within 30"

Coarse-adjust the focus by evenly raising or lowering the washers (#842A - U) located at four places under Mirror box. Then, fine-adjust the focus with Mirror 45 adjusting pin(eccentric) #391. After adjustment, be sure to secure #391 with adhesive #501.

To adjust picture angle

Tools: Appropriate standard lens 50mm F1.4 as a tool. Test chart(J18006). Stage, Focusing screen tool (J18033)
Standard: Paralax . . . Within 0.5mm in the aperture plane, vertically and horizontally.
Finder view . . . Inclination of Finder image against aperture plane to be within 1°30'.

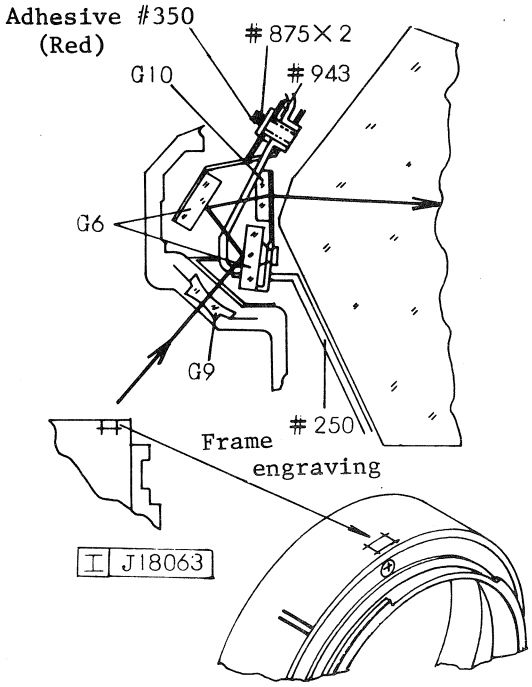

35. F-number window positioning

Attaching F-number window check gauge J18063 onto camera body, check and adjust the Position of F-number window.

Standard

Sideway position: Within 5mm dia of split-image spot

Height above screen: H = 0.3 - 1.5h

View of frame on: Within F-number window J18063

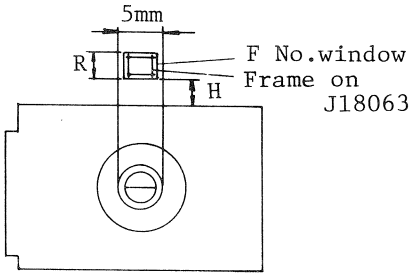

fig.54 F No. window positioning

How to adjust

1) by adjusting prism box (#250) to shift the window in the direction of arrow

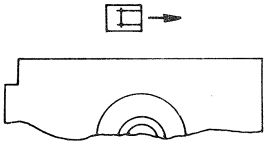

move #250 to the right

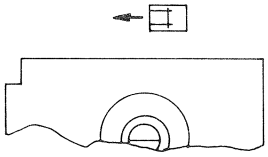

move #250 to the left

2) by adjusting screw(#875) to shift the window and the frame in the direction of arrow

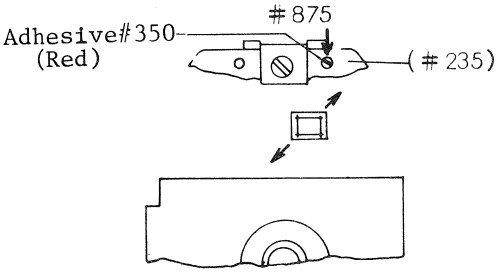

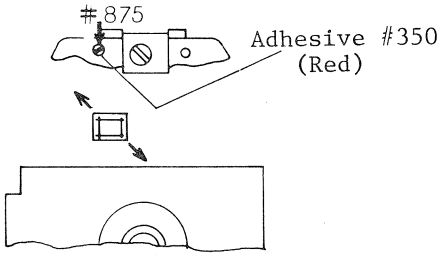

3) by changing washer (#943A - D) to shift the frame on J18063

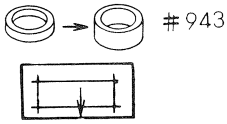

Use thicker washer to move the frame upward

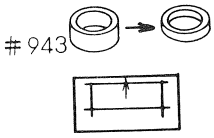

Washer

943A t=0.2
943B t=0.4
943C t=0.6
943D t=0.8

Use thinner washer to move the frame downward

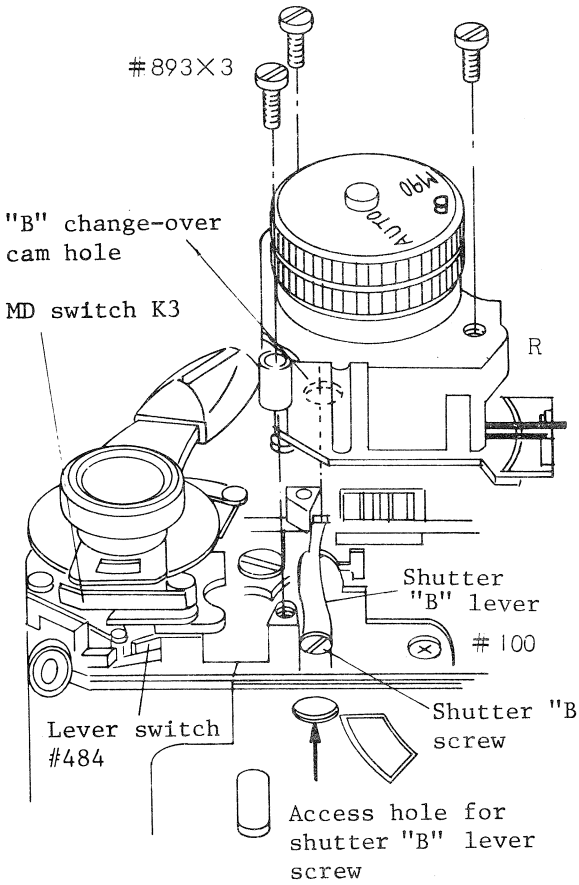

36. Shutter Speed Control(R) Installation

Body

Shutter Speed Control(R)

Set the shutter dial to "B", install Assy No.R in place so that shutter "B" Lever enters into the "B" change-over cam hole, and secure R with three screws (#893) aligning shutter speed film with screen frame. Fig.55) (See fig. 55)
Be careful not to scratch film nor to bend the needle.

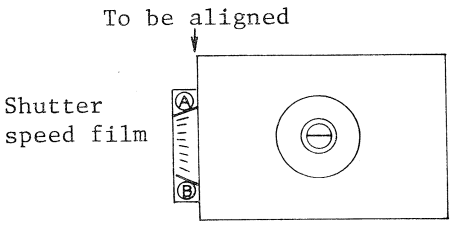

fig.55 Shutter speed film positioning

37. Mechanical Shutter Speed (B, M90) Adjustment

Adjust shutter "B" lever position through an access hole. Then, rotate shutter dial (Auto - M90 - B, B - M90 - Auto) to confirm proper change-over between M90 and B settings.

Lever switch · MD switch

For details of check and adjustment, refer to Item 39 in page 35

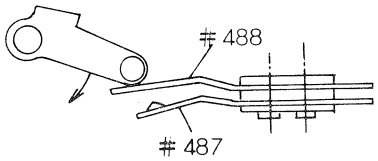

Lever switch

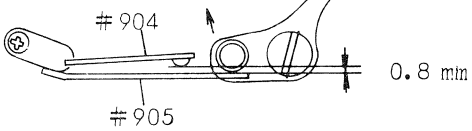

MD switch

38. Wiring diagram

Use Soldering iron with earth.
Solder in cloth-gloves.
Apply insulation coating at the area shaded in the diagram

Soldering Material:
Solder CCS
Flux L-35

35FB - R.3012.A

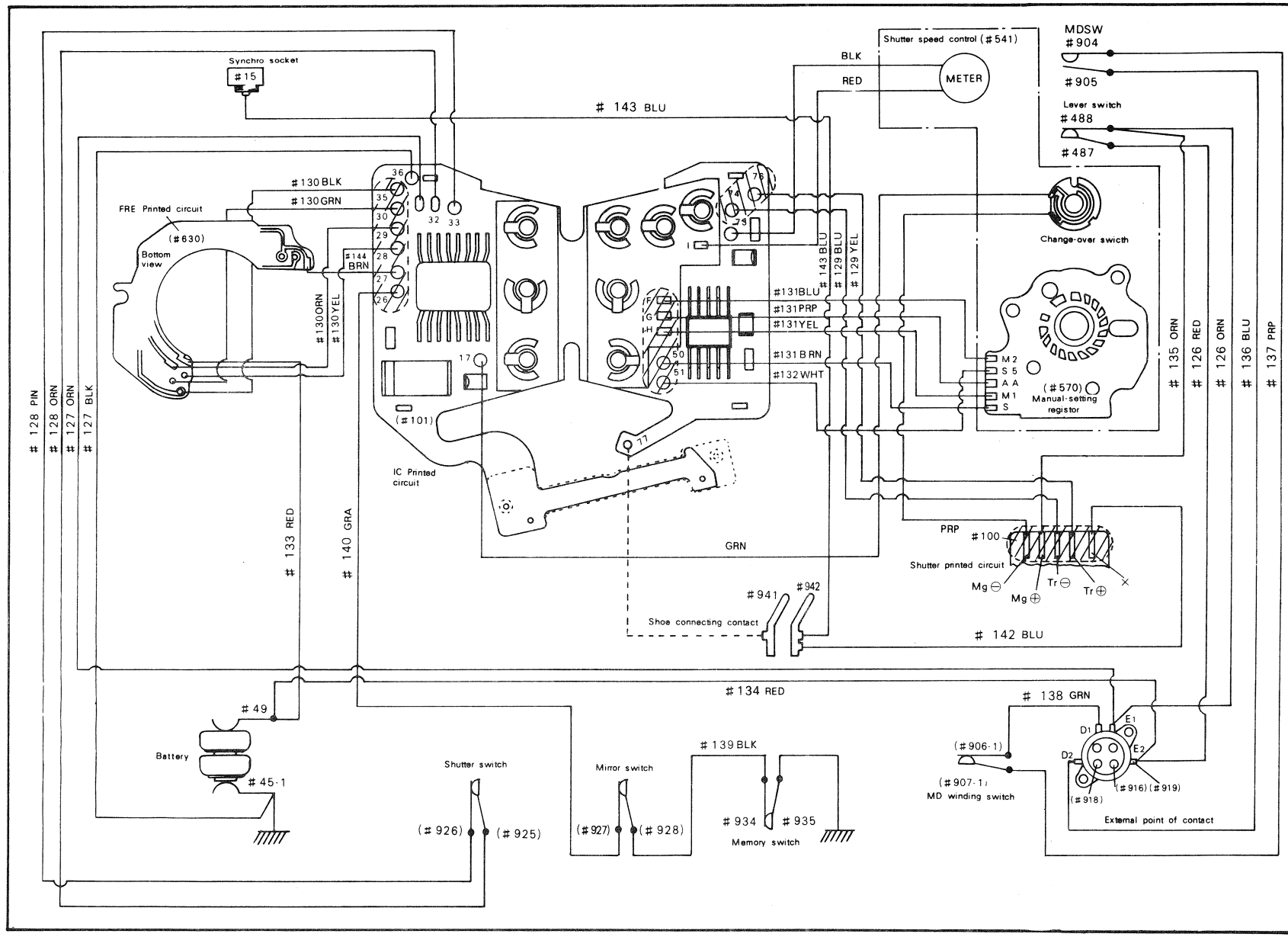

39. Lever Switch · MD switch check/ Adjustment Lever Switch(K4)

ON-OFF position standard:
ON: Within red index dot
OFF: Within the area as large as the red dot (shown in broken-line circle)

Bend switch contacts A, B(#487, #488) for proper ON-OFF timing (See page33)

Inspect ON-OFF timing by the needle operation.
Meter should be switched ON when red dot is uncovered.

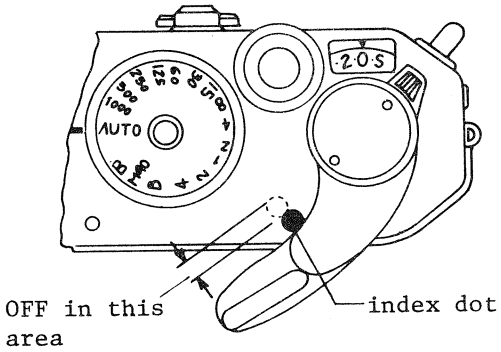

fig.56 Lever switch ON-OFF timing

MD switch(K3)

Setting general tester at resistance range, connect the terminals to D1 and D2. (See Figure 57)

Check the proper switch ON or OFF at the various settings shown in the table below from conduction into the tester.

Perform ON-OFF adjustment by bending MD switch contacts A, B(#904, #905). Contacts' interval between the two to be approx. 0.8mm when switched OFF. (See Lever switch · MD switch section on Page 33)

Note: MD switch(K3) should switch ON after lever switch(K4) switched OFF.
Before MD switch ON. there should be a timing where K3 and K4 are OFF.

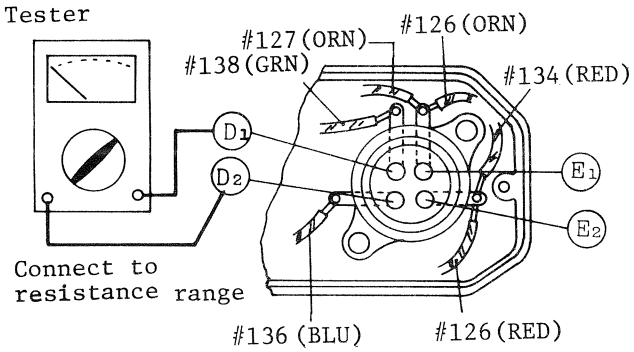

fig.57 MD switch conduction check

MD switch · Lever switch ON-OFF position

MD winding switch		MD switch		Tester
winding cycle	ON-OFF	Lever position	ON-OFF	Conduction
before winding	ON	Flush	ON	Conducted
		Stand-off	OFF	No conduction
Now winding	ON	Flush	ON	Conducted
		Stand-off	OFF	No conduction
Winding finished	OFF	Flush	ON	No conduction
		Stand-off	OFF	No conduction

Note: When MD winding switch and MD switch are ON, tester will be conducted.
For details of MD winding switch adjustment, refer to Page

40. Shutter/Meter Accuracy Adjustment

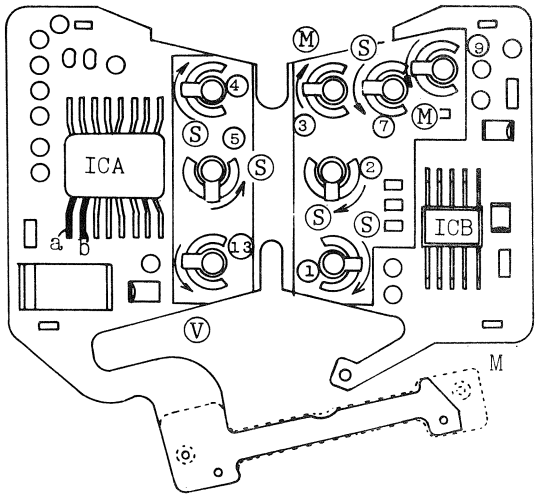

Fig.58 LC printed circuit

Marks:

Encircled No.: shows the number of variable resistor

Encircled alphabet

S : Variable resistor for shutter speed adjustment

M:: Variable resistor for meter needle swing adjustment

V : Variable registor for voltage adjustment

Arrows:
Show the directions to slow the shutter speed, to enlarge the needle swing or to lower the voltage.

e.g.: Ⓢ
Shutter speed can be lengthened by rotating the resistor.

Note: As a rule, when IC printed circuit is subassembled, its off-set adjustment and Auto- adjustment are performed. Thus, adjust in the sequences shown below (1) - (7) only when malfunctings observed.

Tools:

Digital Volt-meter: Imput impedance to be at least 1000MΩ
Resolution power to be at most 10mV

Shutter tester (J19022-1)

Tool lens for J19022-1, 50mm F1.4

Special Top cover for brightness adjustment (J15145)

Insulated screw driver (J15135)

1). OFF set Voltage Adjustment

Potential at ICA terminals a, b to be equal

Potential Difference standard: $|a-b| < 0.5mV$

Measurement: Setting at EV14, measure the voltage between Body(-) and terminal a, and the voltage between Body and terminal b with Digital volt meter(J9003-1). (See fig. 58)
Note: Before measurement, remove anti-humidity silicone coating on terminals a, b with xylol.

Adjustment: Made by rotating variable resistor ⑬.
Voltage change by RV ⑬ is larger at terminal a than terminal b, therefore, adjust the voltage at terminal a to be equal with the voltage at terminal b.

2). Automatic Shutter Speed Control Adjustment

When set at ASA100 and F16, shutter speed at EV9 should be 32 times as slow as that at EV14

Standard: 31.5 - 32.4 times

Adjustment: Made by rotating RV⑦. Shutter speed change by RV⑦ is larger at EV9 than at EV14, therefore, if shutter speed at EV9 is 32-times or more slower than that at EV14, rotate RV⑦ clockwisely.

3) FRE γ Adjustment

Shutter speeds between the two settings' combination (a) (b) should be equal.

a) ASA12, compensation +1, F5.6, EV14

b) ASA3200, Compensation -1, F5.6, EV4

Standard: Shutter speed difference 0.96 - 1.039 times each other

Adjustment: Made by rotating RV ⑤. Shutter speed change is larger at settings (1) than settings (2), therefore rotate RV ⑤ clockwisely if shutter speed at settings(1) is slower than that at (2).

4) Automatic Shutter Speed Control Level Adjustment

Made by rotating RV ④. At ASA100, F5.6 and EV9, shutter speed should be 1/15 sec.

Standard shutter speed: 60.2 - 64.9ms (1/15)

5) Manual Shutter Speed Control γ Adjustment

Shutter speed at 1/2sec.(Manual) should be 32 times as slow as that at 1/60sec.(Manual).

Standard: 31.5 - 32.4 times

Adjustment: Made by rotating RV ②. Shutter speed change by RV ② is larger at slower settings. Therefore, if shutter speed at 1/2sec. is 32-times or less slower than that at 1/60sec, rotate RV ② clockwisely.

6) Manual Shutter Speed Control Level Adjustment

Inspect shutter speeds at the settings of 1/125sec., 1/60sec., 1/2sec., 8sec. to be within standard. If out of standard, adjust by rotating RV ①

Standard: 1/125sec. . . . 8.67 - 9.61ms 1/2sec. . . . 467 -535ms

1/50sec. . . .14.6 - 16.7ms 8sec. . . . 7000 - 9000ms

7) Meter Level/γ Adjustment

a)Meter level Adjustment

At ASA200, F5.6 and EV14, the meter needle should point to the 1sec. setting, or at ASA200, F5.6 and EV9. the needle should point to the 1/30sec. setting. If not, adjust by rotating RV ③

b)Meter γ Adjustment

At ASA200, F5.6 and EV14, the meter needle should point to the 1/1000sec. setting. If not, adjust by rotating RV ⑨.

Note: Adjustment by RV ③ or RV ⑨ affects the meter level or meter γ each other. Therefore, one is adjusted, be sure to inspect the other.

Meter needle swing by rotation of RV ⑨ is larger at EV14 than at EV4. Therefore, adjust RV ⑨ so that the needle at EV14 will point as the needle at EV4 points, showing the similar deviation if any.

8) Shutter Speed Check

a)Automatic shutter speed setting

Sequence Check	F No.			Standard		
				Lower limit	Standard	Upper limit
1	5.6	100	9	44.2	62.5	88.4
2			14	1.38	1.95	2.76
3	16	25		44.2	62.5	88.4
4				1414	2000	2828
5	2	400	9	1.38	1.95	2.76
6			4	44.2	62.5	88.4
7	5.4	100		1414	2000	2828

b)Manual Shutter Speed Setting

Speed setting	Standard		
	Lower limit	Standard	Upper limit
1000	0.68	0.98	1.41
125	7.81	7.81	11.2
15	49.0	62.5	79.7
1	785	1000	1275
8	6277	8000	10190

9) Speedlight-coupling mechanism check

Tool: Speedlight-substitute tool(J15147)

a) Auto shutter speed setting:
Mounting J15147 and setting at ASA 100, F5.6 and EV9, shutter speed should be;

1/90 sec.

b) Manual shutter speed setting:
When set at 1/250 sec. or higher setting with J15147 mounted, the ready light should continuously turn ON and OFF.

Meter Accuracy Check

ASA	F No.	EV	Neadle points
100	8	4	4
100	4	14	1000

10) Memory Check

a) Set at ASA 100, F5.6 and EV9, and measure the shutter speed at Auto.
b) At the above settings, make the memory-lock operation. While changing exposure value (EV) from EV9 to EV14, measure the Auto shutter speed and compare the values with the values obtained without memory-lock operation. Extreme difference not permitted between the two.

41 FRE γ Adjustment by use of Reference Table

1) Adjust RV 5 to get shutter speed of 62.5±1.1ms at the settings of ASA12, exposure compensation setting +2, F5.6 and EV14.
2) Set the camera at ASA 3200, compensation 0, F5.6 and EV4, and read the shutter speed from the tester. Then, identify the corresponding speed in the FRE γ Adjustment Table, column T1.(Speed T1)
3) Keeping the settings of step (2) unchanged, adjust RV5 so as to change the speed in T1 to the speed in T2 column. (Speed T2)
4) Set the camera at the settings of step (1) and read the speed. Then, compare the value with the value in T2. The balance between the two should be within the value shown in the value shown in the table, column Balance. If out of the balance value, repeat the adjusting steps from (1).
e.g.: If Speed T1 obtained at step (2) is 45, the corresponding T2 speed FRE γ Adjustment Table is 27.67(Follow down). Therefore, speed at Step (4) should be 27.67±1.1because of the balance 1.1.

T1	29	31	33	35	37	39	41	43	45	47
T2	9.27	10.95	12.79	14.83	16.99	19.37	21.94	24.46	27.67	30.81
Balance	0.36	0.43	0.5	0.58	0.66	0.76	0.86	0.96	1.1	1.2
T1	49	51	53	55	57	50		65	67	69
T2	34.17	37.74	41.53	45.57	49.76	54.22	62.5	69.1	74.38	80.02
Balance	1.33	1.47	1.62	1.78	1.94	2.1		2.7	2.9	3.12
T1	71	73	75	77	79	81	83	85	87	89
T2	85.91	92.05	98.36	105.1	112.0	119.2	126.7	134.4	142.4	150.7
Balance	3.35	3.59	3.84	4.1	4.37	4.65	4.94	5.24	5.55	5.88
T1	91	93	95	97	99	101	103	105	107	109
T2	159.2	168.1	177.3	186.6	196.3	206.3	216.7	227.3	238.2	249.4
Balance	6.2	6.55	6.9	7.28	7.7	8.05	8.45	8.86	9.3	9.73
T1	111	113	115	117	119	121	123	125	127	129
T2	260.9	272.8	284.9	297.4	310.2	323.4	336.8	350.5	364.7	379.2
Balance	10.2	10.6	11.1	11.6	12.1	12.6	13.13	13.67	14.22	14.79

42 Manual Speed γ Adjustment

1) Adjust RV 2 so as to get 15.6±1ms at 1/60sec. manual setting
2) Set at 1/2sec. setting and read the shutter speed from the tester. Then, identify the corresponding speed in the Table below, column T1. (Speed T1)
3) Keep setting at 1/2sec., and adjust RV 2 so as to change the speed in T1 to that in T2 column. (Speed T2)
4) Setting at 1/60 sec. manual speed, read the speed. The speed should be within the value shown in the Table, Column T2/32(T2 speed ÷ 32).
If out of the value of T2/32 column, repeat the steps from (1).
e.g. If Speed T1 obtained at step (2) is 420, the corresponding T2 speed is 580. Therefore, the speed at step (4) should be 18.1±0.7ms.

Manual speed γ Adjustment Table

T1	350	360	370	380	390	400	410	420	430	440
T2	670	655	640	630	615	600	590	580	570	560
T2/32	20.9 ±0.8	20.5 ±0.8	20 ±0.8	19.68 ±0.8	19.22 ±0.8	18.75 ±0.7	18.43 ±0.7	18.1 ±0.7	17.8 ±0.7	17.5 ±0.7
T1	450	460	470	480	490		510	520	530	540
T2	550	540	530	520	510	500	495	490	483	475
T2/32	17.18 ±0.7	16.88 ±0.7	16.56 ±0.6	16.24 ±0.6	15.94 ±0.6		15.47 ±0.6	15.31 ±0.6	15.09 ±0.6	14.8 ±0.6
T1	550	560	570	580	590	600	610	620	630	640
T2	470	460	455	450	445	440	430	425	420	415
T2/32	14.7 ±0.6	14.38 ±0.6	14.22 ±0.5	14.06 ±0.5	13.9 ±0.5	13.75 ±0.5	13.43 ±0.5	13.28 ±0.5	13.12 ±0.5	12.97 ±0.5
T1	650	660	670	680	690	700	710	720	730	740
T2	410	405	400	395	390	388	385	380	375	372
T2/32	12.8 ±0.5	12.66 ±0.5	12.5 ±0.5	12.34 ±0.5	12.19 ±0.5	12.13 ±0.5	12.03 ±0.5	11.87 ±0.5	11.72 ±0.5	11.62 ±0.5
T1	750	760	770	780	790	800				
T2	368	365	360	355	350	347				
T2/32	11.5 ±0.5	11.41 ±0.5	11.25 ±0.5	111.1 ±0.5	110.9 ±0.5	10.8 ±0.5				

43. Shutter release · Hot-shoe Contact Inspection

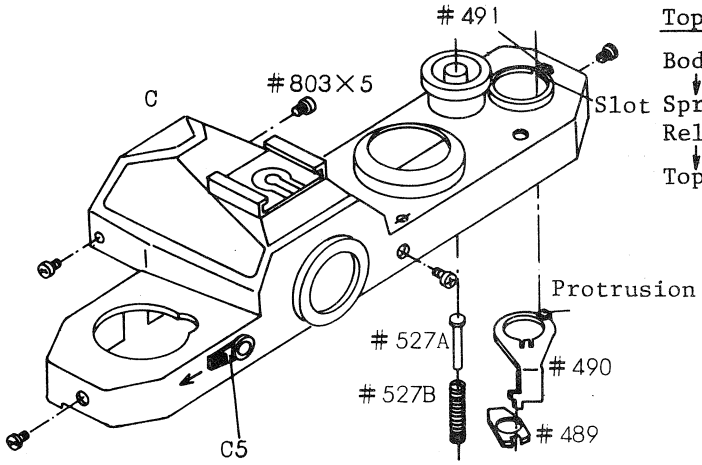

fig.59 Top cover Installation

Top Cover (Assy C) Installation

Body
↓
Spring(#527 B-1)
Release middle shaft(#527A)
↓
Top cover(C), Screw(#803x5)

Charge cam claw release lever (#489) should couple with Multi-exposure lever(#490).

Protrusion on #490 should engage into the cut of multi-exposure knob(#491)

Install checker lever(C5) positioning the lever as illustrated in Figure 59

Be careful not to damage the cover of lead wires.

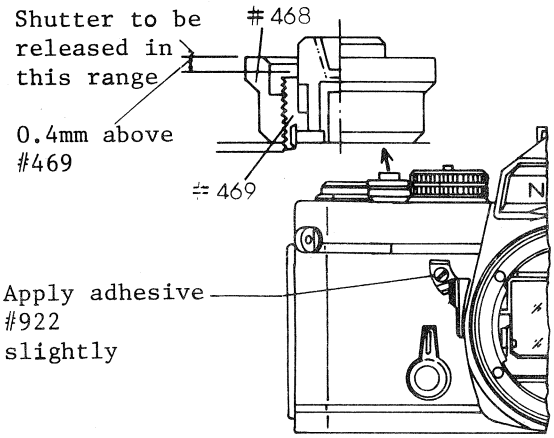

fig.60 Release button stroke

Shutter Release Timing

Shutter release button stroke:
2.7±0.3mm

Shutter should be released when release button depressed within the depth below #468 down to 0.4mm above #469. The button's stroke is 1.7mm.

Tool: Micrometer J18002

Release stroke adjustment is possible by eccentric pin(#519A)

Hot-shoe contact inspection

Check with tool J15147 ready light(#94), Auto-set shutter speed, X contact conduction.

Ready light ON/OFF

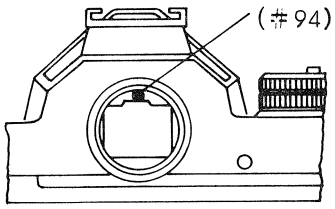

fig.61 Ready light

Shutter Speed dial	Ready light
Auto	ON
1/1000 - 1/250sec.	OFF
1/125 - B	ON

When ready light glows, auto-shutter speed should be automatically controlled to 1/90sec, regardless of the shutter speed indication inside the viewfinder.
X contact conduction is observed by the illumination of LED on J15147
Be careful not to release shutter with high-voltage insulation tester connected.

Section V. Troubleshooting Table

Content

1. Film-advance Mechanism Trouble

35FB - R.3012.A

Trouble	Cause		Solution	Code No.
Film-advance lever fails to return	Spool shaft spring (#529)	Disengagement	Re-install #529	21-01-1-1
		Breakage	Replace spool shaft (A9)	21-01-1-2
	Interference between pendulum #462 and ratchet cam (A10)		Adjust the positions of #538, #871 or both	21-01-2-1
Idle film-advance operation	Improper movement of charge cam claw (#414)		Replace set cam (A10)	21-02-1-1
	Inoperative blank exposure preventer lever (#26-1)		Adjust #26-1	21-02-2-1
	Claw spring #412	Disengagement	Re-install #412	21-02-3-1
		Breakage	Replace #412	21-02-3-2
	Sprocket screw (#435) comes off		Supplement ⊖ #435	21-02-4-1
	Spring #406	Disengagement	Re-install #406	21-02-5-1
		Breakage	Replace #406	21-02-5-2
	Broken Film advance shaft (#408)		Replace #408	21-02-6-1
Inoperative multiple exposures	Inoperative charge cam claw release lever #489		Engage Multi-exposure lever #490 with #489	21-03-1-1
	Foreign material enters into camera body.		Remove foreign material	21-04-1-1
	Defective shutter #100		Replace #100	21-04-2-1
	Stick of Blank exposure preventer lever #26-1		Adjust Motor switch coupling lever #25-1	21-04-3-1
	Stick of Pendulum #462 in set cam A10		Adjust Rendulm eccentric axle #538 and #871	21-04-4-1
Inoperative film-advance lever	Lock lever #464 fails to return	Disengagement of Lock lever spring #465	Re-install #465	21-04-5-1
		Broken #465	Replace #465	21-04-5-2
		#464 rubs with #1 and #539	Adjust and lubricate L 2113	21-04-5-3
	Catch of Sprocket stopper A12	A12 rubs against associated parts	Adjust #447 and #888 then lublicate L 2113	21-04-6-1
		Disengagement of spring #450	Re-install #450	21-04-6-2
		Broken #450	Replace #450	21-04-6-3
	Shutter release shaft #527 fails to return due to defective Release shaft spring #536		Re-install Release shaft E-ring #841	21-04-7-1
	MD Shaft #911 fails to return		Clean and lubricate L 2113	21-04-8-1
			Replace #911	21-04-8-2
Inoperative Anti-reversing	Screw #871 loosened		Adjust position of Pendulum eccentric axle #538	21-05-1-1
	Pendulum spring #538A	Disengagement	Re-install #538A	21-05-2-1
		Breakage	Replace #538A	21-05-2-2

Trouble	Cause		Solution	Code No.
Inoperative sprocket Anti-reversing	Improper movement of Anti-reversing claw A #443 and B #444		Adjust #443 and #444	21-06-1-1
			Replace Lower base plate A11	21-06-1-2
	Weak Anti-reversing claw spring #445		Adjust #445	21-06-2-1
			Replace Lower base plate A11	21-06-2-2
Excessive play of sprocket or Uneven frame-to-frame space	Incorrect position of sprocket stopper cam #429	Incorrect positioning	Adjust position of #429	21-07-1-1
		Loose Gear set screw #824	Adjust position of #429	21-07-1-2
	Sprocket stopper #447 bent		Adjust #447	21-07-2-1
			Replace sprocket stopper A12	21-07-2-2
	Broken sprocket stopper spring #496		Replace #496	21-07-3-1
Overlapped exposures	Pendulum #462 is released from Ratchet cam #530 too early		Adjust position of Pendulum eccentric axle #538	21-08-1-1
	Excessive play of sprocket		Refer to code No. (21-07-1-1)-(21-07-3-1)	21-08-2-1
	Weak spool tension		Adjust tension (220 - 260g)	21-08-3-1
Failure to cock shutter	Defective shutter #100		Replace #100	21-09-1-1
	Loose caulking of shutter charge lever A4		Replace A4	21-09-2-1
Failure to charge mirror	Loose caulking of charge lever A6		Replace A6	21-10-1-1
	Poor engagement of Mirror-down latch lever #330 and Mirror-down lever B13.		Adjust #330	21-10-2-1
			Replace #330	21-10-2-2
			Replace B13	21-10-2-3
	Spring #289	Disengagement	Re-install #289	21-10-3-1
		Breakage	Replace #289	21-10-3-2
	Bent tip of Mirror charge lever B11		Replace B11	21-10-4-1
Excessive play of Film-advance lever	Loose Wind-up lever screw #403		Re-tighten #403	21-11-1-1
Abnormal sound during film-advance operation				21-12-1-1

2. Frame Counter Mechanism Trouble

Trouble	Cause		Solution	Code No.
Failure of fame counter advance	Improper position of Counter eccentric shaft #516-1		Adjust position of #516-1	22-01-1-1
	Spring #521	Disengagement	Re-install #521	22-01-2-1
		Breakage	Replace #521	22-01-2-2
	Improper movement of advance claw #510-1		Adjust advance claw lever axle #512	22-01-3-1
	Incorrect shape of teeth of ratchet #532-1		Replace #532-1	22-01-4-1
Inoperative counter resetting	Disengagement of spring #505		Re-install #505	22-02-1-1
	Disengagement of spring #521		Re-install #521	22-02-2-1
	Failure of ratchet claw return #506		Adjust claw nut #507	22-02-3-1
Disaligned Index	Loose lever axle nut #405		Adjust Frame-counter index #533 and #405	22-03-1-1

3. Shutter Release Mechanism Trouble

Unsmooth shutter button operation	Shutter release shaft #527 rubs against Body die-casting #1		Adjust and grease G7100	23-01-1-1
	Release lever guide pin #879 rubs against body die-casting #1		Chamfer guide groove of #1	23-01-2-1
	Loose release lever guide pin #879		Re-tighten #879	23-01-3-1
	Release button rubs against Release ring #469		Clean, adjust and grease G7100	23-01-4-1
	Mirror-up lever B12 rubs against Mirror-up stop lever #329		Grind engaging portion with oilstone and grease G7100	23-01-5-1
Incorrect shutter release timing	Incorrect position of Eccentric pin #519A		Adjust position of #519A	23-02-1-1
Failure of Shutter release button depression	Lock lever #464 fails to return		Adjust movement of #464	23-03-1-1
	Broken lock lever spring #465		Replace #465	23-03-2-1
	Switch lock lever P4 fails to disengage from shutter release shaft #527	Disengagement of spring #476	Re-install #476	23-03-3-1
		Broken #476	Replace #476	23-03-3-2
		P4 rubs against #473	Adjust MD switch stopper axle #473	23-03-3-3
Unable to release shutter with motor drive	Release connecting screw #913 comes off		Install #913 and apply adhesive #410 B/M	23-04-1-1
	Defective Motor Drive		Refer to MD-11 Repair Manual	

4. Shutter Mechanism Trouble

35FB - R.3012.A

Trouble	Cause		Solution	Code No.
Incorrect shutter speed	Defective shutter #100		Replace #100	24-01-1-1
	Electrical circuitry trouble		Refer to electrical troubleshooting	
Shutter curtain jam during film advance	Defective shutter #100		Replace #100	24-02-1-1
Shutter rear curtain fails to return	Too tight Brake spring (#286-1)		Replace shutter brake B37	24-03-1-1
Inoperative 'B' setting	Incorrect position of shutter 'B' lever eccentric screw of #100		Adjust position of eccentric screw	24-04-1-1
	Improper movement of shutter 'B' lever	Lever bent	Adjust #100	24-04-2-1
			Replace #100	24-04-2-2
		Poor Eccentric axle caulking	Replace #100	24-04-2-3
	Defective shutter #100		Replace #100	24-04-3-1
Shutter curtain fails to open at M90	Defective shutter #100		Replace #100	24-05-1-1
Incorrect shutter speed at M90	Defective shutter #100		Replace #100	24-06-1-1
Shutter speed sometimes becomes 'B' at M90	Incorrect position of shutter 'B' lever eccentric screw of #100		Adjust #100	24-07-1-1

5. Self-timer Mechanism Trouble

Unable to cock self-timer	Defective self-timer		Replace shutter #100	25-01-1-1
Self-timer stops halfway	Self-gear assembly	Dust	Clean self-gear assembly	25-02-1-1
		Defective	Replace shutter #100	25-02-1-2
Unable to cancel setting	Incorrect position of self-timer shaft eccentric screw		Adjust position of Eccentric screw	25-03-1-1
	Defective self-timer		Replace shutter #100	25-03-2-1

6. Flash Synchronization Trouble

35FB - R.3012.A

Trouble	Cause		Solution	Code No.
Poor synchronization	Incorrect X contact clearance of #100		Adjust contact clearance	26-01-1-1
			Replace #100	26-01-1-2
	Incorrect shutter speed at M90	Poor adjustment of Shutter 'B' lever eccentric screw	Adjust position of shutter 'B' lever eccentric screw	26-01-2-1
		Defective shutter #100	Replace #100	26-01-2-2
Failure of flash output on hot-shoe contact	Defective sync socket #15		Replace #15	26-02-1-1
	X contact of #100	Incorrect clearance	Adjust clearance	26-02-2-1
			Replace #100	26-02-2-2
		Contamination or dust	Clean contact	26-02-2-3
	Lead wire A #142 Lead wire B #143	Disconnection	Replace #142 or #143	26-02-3-1
		Disengagement	Re-solder	26-02-3-2
	Incorrect clearance between upper shoe switch contact #69 and Lower shoe switch contact #70	Bend of #69 or #70	Adjust clearance between #69 and #70	26-02-4-1
		Loose nut #76	Re-tighten #76	26-02-4-2
Poor insulation	Defective sync. socket #15		Replace #15	26-03-1-1
	Lead wire A #142 Lead wire B #143	Broken vinyl cover	Replace #142 or #143	26-03-2-1
		Poor soldering	Re-solder	26-03-2-2
	Defective Hot-shoe mould (C1)		Replace C1	26-03-3-1
	Defective Ready-light printed circuit C6		Replace C6	26-03-4-1

7. Lens Mount Mechanism Trouble

Unable to release lens	Inoperative lens release lever B5		Clean and grease G7100	27-01-1-1
Excessively tight or loose lens releasing	Bayonet spring #208 x 3	Excessive spring pressure	Adjust bending of #208	27-02-1-1
		Weak spring pressure	" "	27-02-2-1
	Defective bayonet #202		Replace #202	27-02-2-1

8. Meter Coupling Mechanism Trouble

35FB - R.3012.A

Trouble	Cause		Solution	Code No.
Unsmooth Aperture Coupling ring operation	Incorrect position of Bayonet mount #201		Re-locate #201 to provide smooth operation of B4	28-01-1-1
	Improper combination of Bayonet mount #201 and Aperture coupling ring B4		Change parts combination for proper match	28-01-2-1
	Improper engagement of Brush coupling gear B25		Adjust position of B25	28-01-3-1
			Replace B25	28-01-3-2
	Tread #269	Disengaged from Roller lever B7	Re-install #269. Check position of Thread retaining plate #264	28-01-4-1
		Poor knot	Re-knot #269	28-01-4-2
			Replace B25	28-01-4-3
	Incorrect shape of Brush gear teeth #686		Replace #686	28-01-5-1
	Poor engagement of Brush gear #686 with Brush coupling gear B25		Adjust play between #686 and B25	28-01-6-1
	Brush B #698 disengages from FRE printed circuit J		Adjust position of #698	28-01-7-1
	Defective spring #694 of B25	Insufficient spring pressure	Replace B25	28-01-8-1
		Broken #694	Replace B25	28-01-8-2
	Uneven rotation of FRE		Adjust FRE rotation	28-01-9-1
			Replace FRE ring F2	28-01-9-2
Coupling ring fails to couple with FRE	Thread (269)	Sanpped	Replace Brush coupling gear B25	28-02-1-1
		Disengagement	Re-knot #269	28-02-1-2
			Replace B25	28-02-1-3
Excessive play of Aperture coupling piece	Coupling Piece Spring	Bend	Adjust bending of #210	28-03-1-1
		Incorrect position	Adjust position of #210	28-03-1-2
Unable to release Aperture coupling piece	Calking of Aperture coupling piece #209 comes off		Replace Aperture coupling ring B4	28-04-1-1
Incorrect Maximum Aperture (F1.4) compensation	Incorrect setting position of Brush coupling gear B25		Adjust position of coupling gear #224	28-05-1-1
	Improper movement of Roller lever B7		Adjust movement of B7	28-05-2-1
			Replace B7	28-05-2-2
	Roller lever spring #267	Disengagement	Re-install #267	28-05-3-1
		Breakage	Replace #267	28-05-3-2

9. Diaphragm Actuating Lever Trouble

Trouble	Cause		Solution	Code No.
Inoperative Diaphragm actuating lever	Diaphragm lever spring #340	Disengagement	Re-install #340	29-01-1-1
		Breakage	Replace #340	29-01-1-2
Failure to open to maximum operture	Incorrect height of Diaphragm actuating lever B10, with shutter cocked		Adjust height to be 3.1 +1 -0 by Eccentric pin #356	29-02-1-1
Shutter is released while stroking film-advance lever with lens mounted	Insufficient difference of height of B10 between before shutter cocking and after shutter releasing.		After releasing shutter, adjust Down lever eccentric axle #367 Difference to be 0.15mm or more	29-03-1-1
Incorrect height of Diaphragm acuating lever, with shutter cocked	Shock absorb rubber #363 comes off		Affix #363 with adhesive #501	29-04-1-1

10. Reflex-Mirror Mechanism Trouble

Abnormal mirror sound	Inoperative Air damper B20		Replace B20	30-01-1-1
	Cushion rubber #372 comes off		Affix #372 with adhesive #501	30-01-2-1
	Incorrect spring pressure of Brake spring #286-1		Replace B37	30-01-3-1
	Excessive play between Mirror holder B26 and Mirror G1	Defective Mirror holder A #345 or B #346	Replace B26	30-01-4-1
		G1 comes off	Affix G with adhesive #501	30-01-4-2
Incorrect position of Mirror	Incorrect angle of Mirror holder A #345 and B #346		Adjust #345 and #346	30-02-1-1
			Replace Mirror holder B26	30-02-1-2
Too early or late mirror-rising	Incorrect position of Eccentric pin #356		Adjust #356	30-03-1-1
Mirror stops midway during operation	Air damper B20 jams	Contamination	Clean B20	30-04-1-1
		Rust	Replace B20	30-04-1-2
Shift of Mirror position dependent on camera holding	Mirror spring (s) #379	Insufficient spring pressure	Replace #379	30-05-1-1
		Breakage	Replace #379	30-05-1-2

11. Viewfinder Mechanism Trouble

35FB - R.3012.A

Trouble	Cause		Solution	Code No.
Improper infinity focusing	Improper movement of 45° stopper B16		Adjust B16	31-01-1-1
			Replace B16	31-01-1-2
	Excessive play between Mirror holder B26 and Mirror G1	Defective Mirror holder A #345 and B #346	Adjust #345 and #346	31-01-2-1
			Replace B26	31-01-2-2
		G1 comes off	Affix G1 with adhesive #501	31-01-2-3
	Deformation of Mirror holder B26	Deformed Mirror holder #301	Replace B26	31-01-3-2
		Loose calking of pin A #307	Replace B26	31-01-3-2
		Loose calking of pin B #308	Replace B26	31-01-3-3
Incorrect picture format	Incorrect mirror angle		Adjust 45° stopper B16	31-02-1-1
	Incorrect position of Prism box B39		Adjust position of B39	31-02-2-1
Poor viewing	Fresnel screen G2	Distortion	Replace G2	31-03-1-1
		Poor installation	Adjust G2 installation	31-03-1-2
	Incorrect position of Prism box B39		Adjust height of B39	31-03-2-1
	Incorrect mirror angle		Adjust 45° stopper B16	31-03-3-1
Fresnel lens prone to come off	Insufficient spring pressure of screen lock spring #240		Adjust #240	31-04-1-1
Incorrect position of T-film	Incorrect position of shutter speed control R		Adjust position of R	31-05-1-1
Incorrect position of lens aperture indication window	Poor adjustment of Reflex Mirror G6		Adjust G6	31-06-1-1
	Poor adjustment of G10		Adjust G10	31-06-2-1
	Incorrect position of Prism box B39		Adjust position of B39	31-06-3-1
Incorrect position of green needle			Adjust R	31-07-1-2
			Replace R	31-07-1-2
Poor focusing	Improper infinite focusing		Refer to Code No. (31-01-1-1)-(31-01-3-3)	
	Incorrect flange back		Adjustment	31-08-1-1
Aluminum plating separation on penta prism			Replace G3	31-09-1-1
Dust or contamination in viewfinder			Clean	31-10-1-1
Scratch on fresnel screen			Replace G2	31-11-1-1

12. Exposure meter Mechanism Trouble

35FB - R.3012.A

Trouble	Cause			Solution	Code No.
Meter needle fails to swing	MD external contact pin (E1) and (E2) fail to be ON	Poor contacts between Lever switch contact A #487 and B #488		Clean #487 and #488	32-01-1-1
				Adjust clearance between #487 and #488	32-01-1-2
		Poor contact of Battery chamber A5		Clean contact of A5	32-01-1-3
				Replace A5	32-01-1-4
		Lead wire #126	Disconnection	Replace #126	32-01-1-5
			Unsolderd	Re-solder	32-01-1-6
	Meter needle fails to operate when MD external contact pin (E1) and (E2) is ON	Defective electrical circuitry		Refer to Electrical Trouble shooting	
	Defective only when motor drive mounted	MD's switch fails to be ON		Refer to MD repair manual	
Meter switch fails to be OFF	MD external contact pin (E1) and (E2) fail to be OFF	Lever switch contact A #487 touches B #488		Adjust clearance between #487 and #488	32-02-1-1
		Lead wire #126	Short circuit	Replace #126	32-02-1-2
			Poor soldering	Re-solder	32-02-1-3
	Defective only when motor drive mounted	MD's switch fails to be OFF		Refer to MD Repair Manual	

13. Memory Lock Mechanism Trouble

Inoperative memory lock	Memory switch fails to be OFF	Adjust by bending Memory switch #934	33-01-1-1
	Defective electrical circuitry	Refer to Electrical Trouble shooting	

14. ASA Setting Mechanism Trouble

35FB - R.3012.A

Trouble	Cause		Solution	Code No.
Unsmooth rotation of ASA film speed ring	Tight rotation of FRE(F2)		Adjust and clean FRE ring F2	34-01-1-1
			Replace FRE ring F2	34-01-1-2
Unable to change ASA setting	Protrusion of ASA click spring #670 does not disengage from ASA click plate #676		Adjust bending of #670	34-02-1-1
Unable to lock ASA setting	Protrusion of ASA click spring #670 does not fit into the cut-out of ASA click plate #676		Adjust bending of #670	34-03-1-1
	Loose ASA dial #672		Secure knob lock lever shaft #689 with screw ⊕ #802	34-03-2-1
Disaligned ASA index	ASA dial #672 comes off		Affix #672 with adhesive #501	34-04-1-1
Unsmooth rotation of Exposure correction ring	Exposure correction spring #692	Insufficient spring pressure	Adjust #692	34-05-1-1
		Contamination	Clean #692	34-05-1-2
	Unsmooth rotation of FRE ring F2		Adjust and clean F2	34-05-2-1
			Replace F2	34-05-2-2
Unable to compensate exposure	Broken Exposure correction click pin #695		Replace ASA dial F4	34-06-1-1

15. Rewinding Mechanism Trouble

Unsmooth rewinding	Creak of Rewind shaft #652 and Release shaft guide #665		Clean #652 and #665 and grease G7100	35-01-1-1
			Replace #652	35-01-1-2
			Replace #665	35-01-1-3
Inoperative camera back latch release	Spring #655	Disengagement	Re-install #652	35-02-1-1
		Breakage	Replace #665	35-02-1-2
Difficult to lift up rewind knob when opening camera back	Improper movement of Latch B #708		Clean contact of #708	35-03-1-1
Inoperative Film rewind button	AR lever #537	Improper movement	Adjust #537	35-04-1-1
		Disengagement of AR lever spring #537B	Re-install #537B	35-04-1-2
		Broken AR lever spring #537B	Replace #537B	35-04-1-3

16. Battery Consumption Trouble

Trouble	Cause	Solution	Code No.
Poor insulation between MD external contact pin (E1) and (E2)	Lever switch contact A #487 touches B #488	Adjust clearance between #487 and #488	36-01-1-1
	Vinyl cover of Lead wire #126(Orange) (Red) is broken and comes in contact with Body die-casting	Replace #126	36-01-2-1
	Poor soldering of Lead wire #126	Re-solder #126	36-01-3-1
	Defective electrical mechanism	Refer to electrical trouble shooting	

17. MD External Contact Pin Mechanism Trouble

Failure to operate with motor drive	Poor conduction between MD external contact pin (E1) and (E2)	Poor contact of MD terminal pin	Clean and adjust	37-01-1-1
		Poor contact between MD take-up switch A(#906-1) and B(#907-1)	Clean #906-1 and #907-1	37-01-2-1
			Adjust clearance between #906-1 and #907-1	37-01-2-2
			Replace Battery chamber A5	37-01-2-3
		Poor contact of MD switch K3	Clean #904 and #905	37-01-3-1
			Adjust clearance between #904 and #905	37-01-3-2
		Poor operation of switch lock lever P4	Adjust P4	37-01-4-1
			Replace P4	37-01-4-2
		Switch stopper spring #476 of P4 disengaged or broken	Re-install #476	37-01-4-3
			Replace #476	37-01-4-4
		Disconnection or poor soldering of Lead wire (#136, #137, #138)	Replace #136, #137, #138	37-01-5-1
			Re-solder #136, #137, #138	37-01-5-2
	MD external contact pin (E1) and (E2) fail to be OFF	Soldered portion of MD switch K3 contacts upper base plate K	Re-solder	37-02-1-1
		MD take-up switch A #906-1 and B #907-1 contact body die-costing	Adjust bending of #906-1 and #907-1	37-02-2-1
			Replace Battery chamber A5	37-02-2-2
		Short-circuit between Lead wire (#136,#137, #138) and Body die-casting due to breakage of vinyle cover	Replace #136, #137 #138	37-02-3-1
	Camera body only operative	Defective motor drive	Refer to MD repair manual	

18. Exterior Parts Trouble

35FB - R.3012.A

Trouble	Cause	Solution	Code No.
Camera back loosened	Defective Light-tight #58-1 " " #58A-1 " " #58B-1	Replace #58-1, #58A-1 and #58B-1	38-01-1-1
	Defective camera back E1	Replace E1	38-01-2-1
Loose shutter dial ring	Defective click of shutter speed control R	Replace R	38-02-1-1
Disengagement of eyelet	Eyelet set screw #848 falls off	Install #848	38-03-1-1
Scratch or crack		Replacement	38-04-1-1

1. Servicing procedures

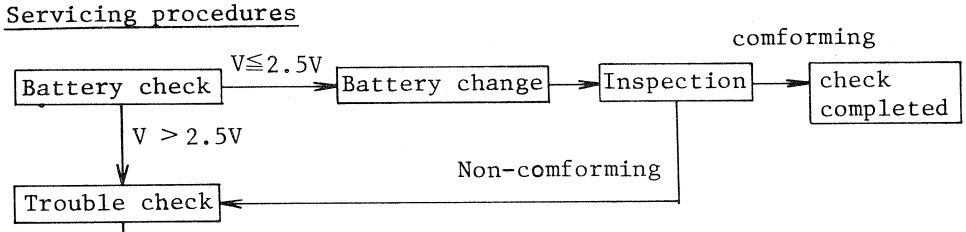

Auto	Manual	Meter	Classification code	page
normal	normal	normal	000	
normal	normal	ABNORMAL	001	
normal	ABNORMAL	normal	010	
normal	ABNORMAL	ABNORMAL	011	
ABNORMAL	nomal	normal	100	
ABNORMAL	normal	ABNORMAL	101	
ABNORMAL	ABNORMAL	normal	110	
ABNORMAL	ABNORMAL	ABNORMAL	111	

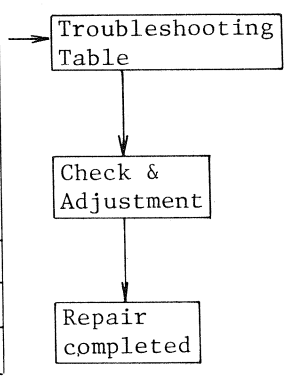

Note: Classification code is represented by three figures. The first figure from the left represents the normal or abnormal Condition of Auto setting. The middle figure is for the condition of manual setting, and the last figure for the condition of meter needle indication. If the operation is normal, "0" will be given in the corresponding place, and "1" if abnormal.

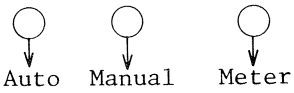

e.g.

Auto	Manual	Meter
↓	↓	↓
Normal	Abnormal	Normal
0	1	0

→ thus classification code is 010

Battery check

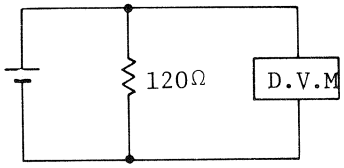

V<2.5V: conforming
V≦2.5V: Nonforming

D.V.M: Digital Volt meter

How to check the trouble

Use power source box (J19024) and Battery tool (J15148).
Unless otherwise specified, check at the settings of ASA100 and F5.6.

2. How to read troubleshooting table

Classification code ①			How to check	Cause	Code No.
Auto	Manual	Meter			
②	③	④	⑤	⑥	⑦

①: Classification code No.

②,③,④: Malfunctioning conditions given in these column.
If normal, the colums left blank.

⑤: Malfunctioning conditions except at Auto, Manual and Meter.
Left blank if additional phenomena not found.

⑥: Cause of the malfunctioning conditions

⑦: Code No. to refer to the cause

Marks and Terminology

#101 (31): Terminal No.(31) on IC printed circuit

#108 (1): Terminal No.(1) on Resistor block B(#108)

#630 (7): Terminal No.(7) on FRE printed circuit (#630)

#100 (Tr +): Terminal (Tr +) on shutter printed circuit (#100)

#570 [AA]: Terminal [AA] on manual printed circuit (#570)

Lever switch ON: By pulling out the film-advance lever to stand-off position.

Trigger switch ON: By turning the film-advance lever.

Shutter switch ON: Switches on while mirror is rising. To facilitate the check by keeping the switch ON, set the self-timer and depress the shutter release button, holding the mirror with finger to allow the mirror to gently rise.

Icc: Current at Power source

Standard Icc

With lever switch ON: Approx. 1 - 2.5mA

With Trigger switch ON: Approx. 1 - 2.5mA

With Shutter switch ON: Approx. 12 - 20mA

Note: Extremely large Icc may damage the IC. Therefore, switch off the power source immediately after completion of check.

3. Switches

Description	Abbreviation	Position
Lever switch	L. sw	Lower base plate
Mirror switch	M. Sw	Front plate
Shutter switch	S. Sw	Front plate
Trigger switch	Tr. Sw	Shutter
Second curtain switch		Battery chamber
Synch switch		Shutter
MD switch	MD Sw	Upper base plate
Memory lock switch	ML Sw	Front plate
Mech. speed changeover switch		Shutter speed control
Checker switch		FRE Printed circuit

Switch Operation

Camera operation	Film-advance lever pulled out	Film-advance starts	Film-advance finished	Shutter button pushed	Mirror-up starts	Shutter-release starts	Mirror-up finished	1st curtain starts	1st curtain travel finished	2nd curtain starts	2nd curtain travel finished	Mirror-down starts	Mirror-down finished	Film-advance lever pressed back
L. Sw	ON													OFF
M. Sw					OFF									
S. Sw													ON immediately after M.Sw OFF	
Tr. Sw		ON					OFF immediately before 1st curtain travel							
2nd curtain Sw			OFF								ON			
Synch. Sw									ON		OFF			
MD. Sw	OFF													ON
ML Sw.	OFF when memory lock lever pressed toward the lens													
Mech. speed change-over switch	OFF at "B" and M90													
Checker switch	ON when checker lever lowered													

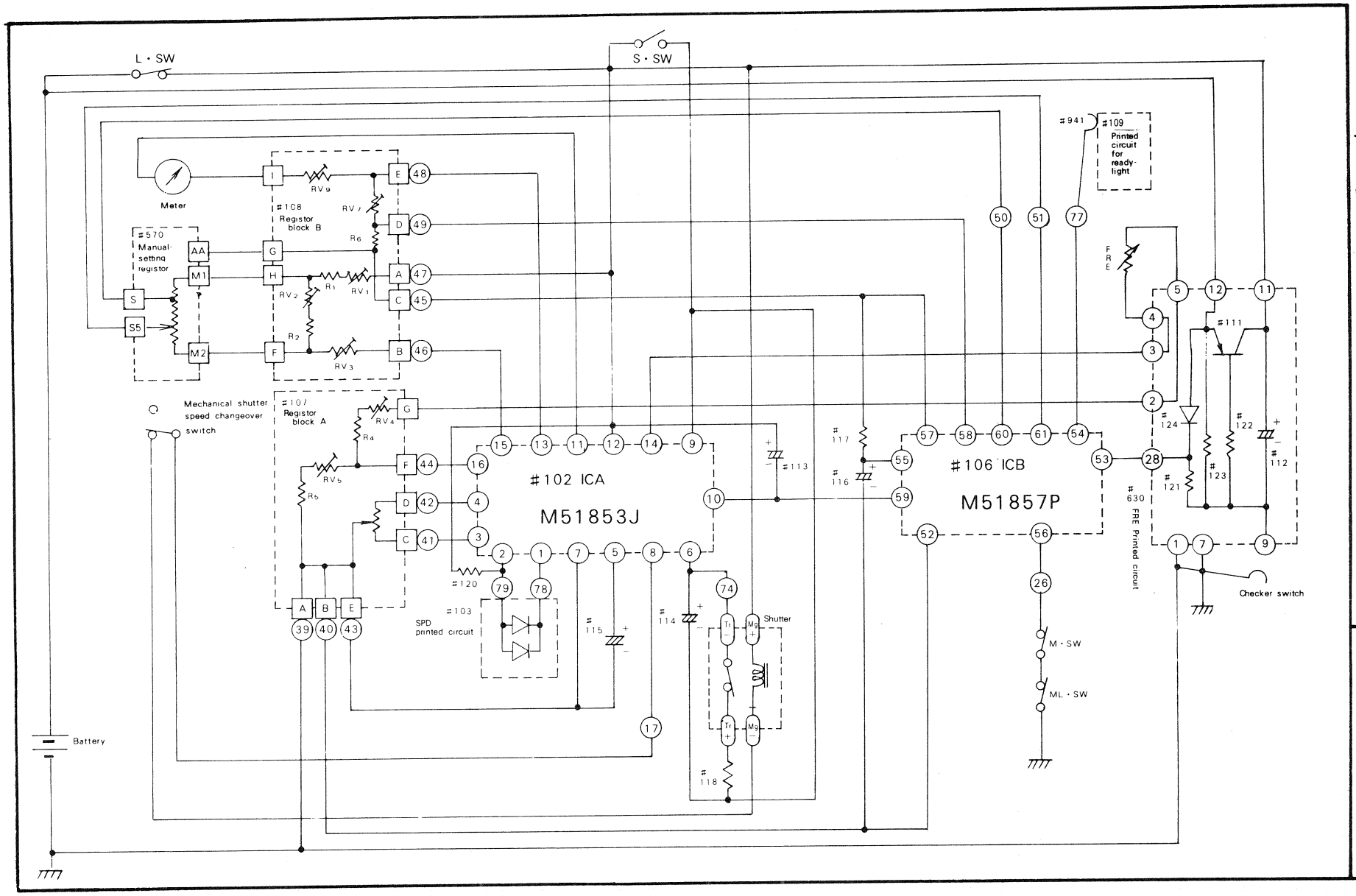
L · SW
S · SW
Meter
#108
Registor block B
#570
Manual-setting registor
Mechanical shutter speed changeover switch
#107
Registor block A
#102 ICA
M51853J
#106 ICB
M51857P
#941
#109
Printed circuit for ready-light
#111
#630 FRE Printed circuit
Checker switch
SPD printed circuit
#103
Shutter
M · SW
ML · SW
Battery

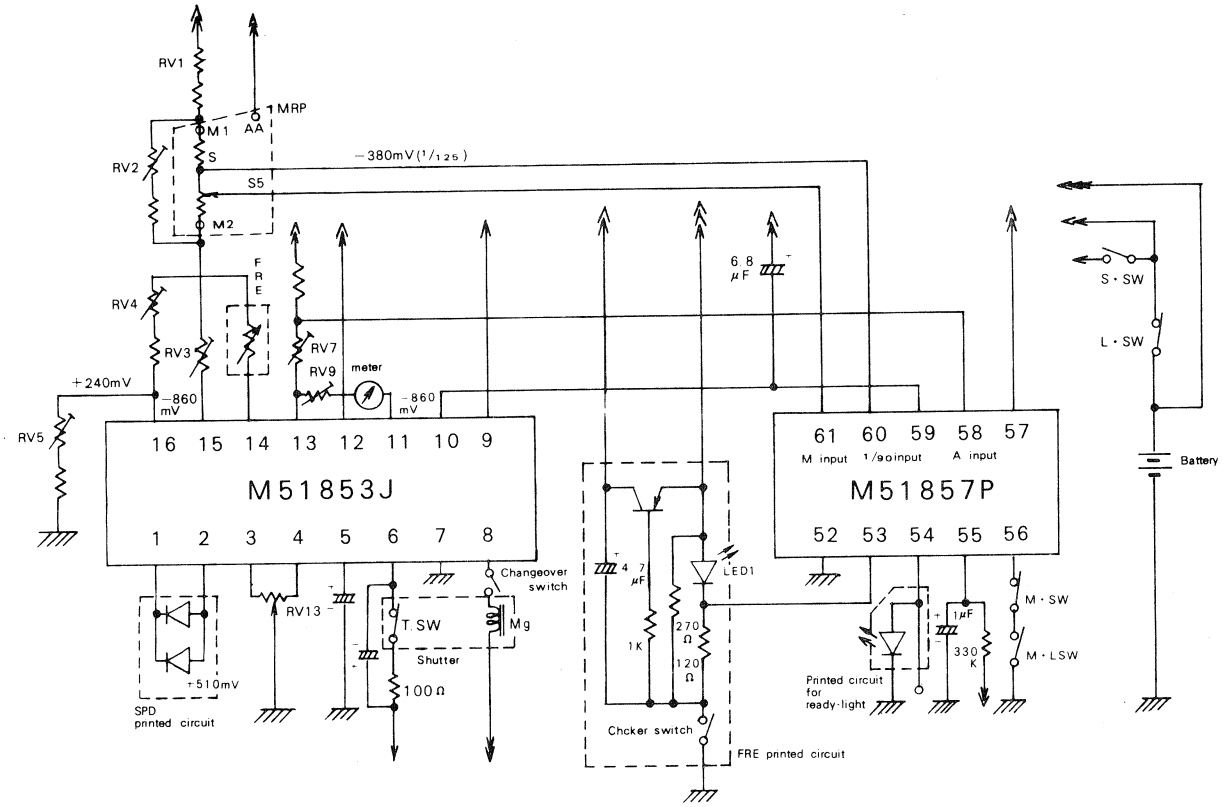

Voltage/Shutter speed relation (determined at computing circuit)

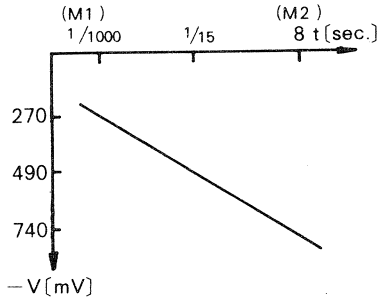

M51853 J:

for shutter speed control at Auto and Manual

for shutter speed indication inside the finder(meter)

M51857 P:

for battery check

for changeover between Auto and Manual

for memory or memory lock

for camera control for proper SB-10 operation

Voltage at 6 pin of M51853 J varies until it matches with the voltage(shutter speed) memorized in memory circuit as shown in the graph.

Voltage at pins 59 and 61 of M51857 P, and at pin 10 of M51853 J are traceable from the graph. When in use of SB-10 at Auto, voltage of approx. - 400mV(1/90)

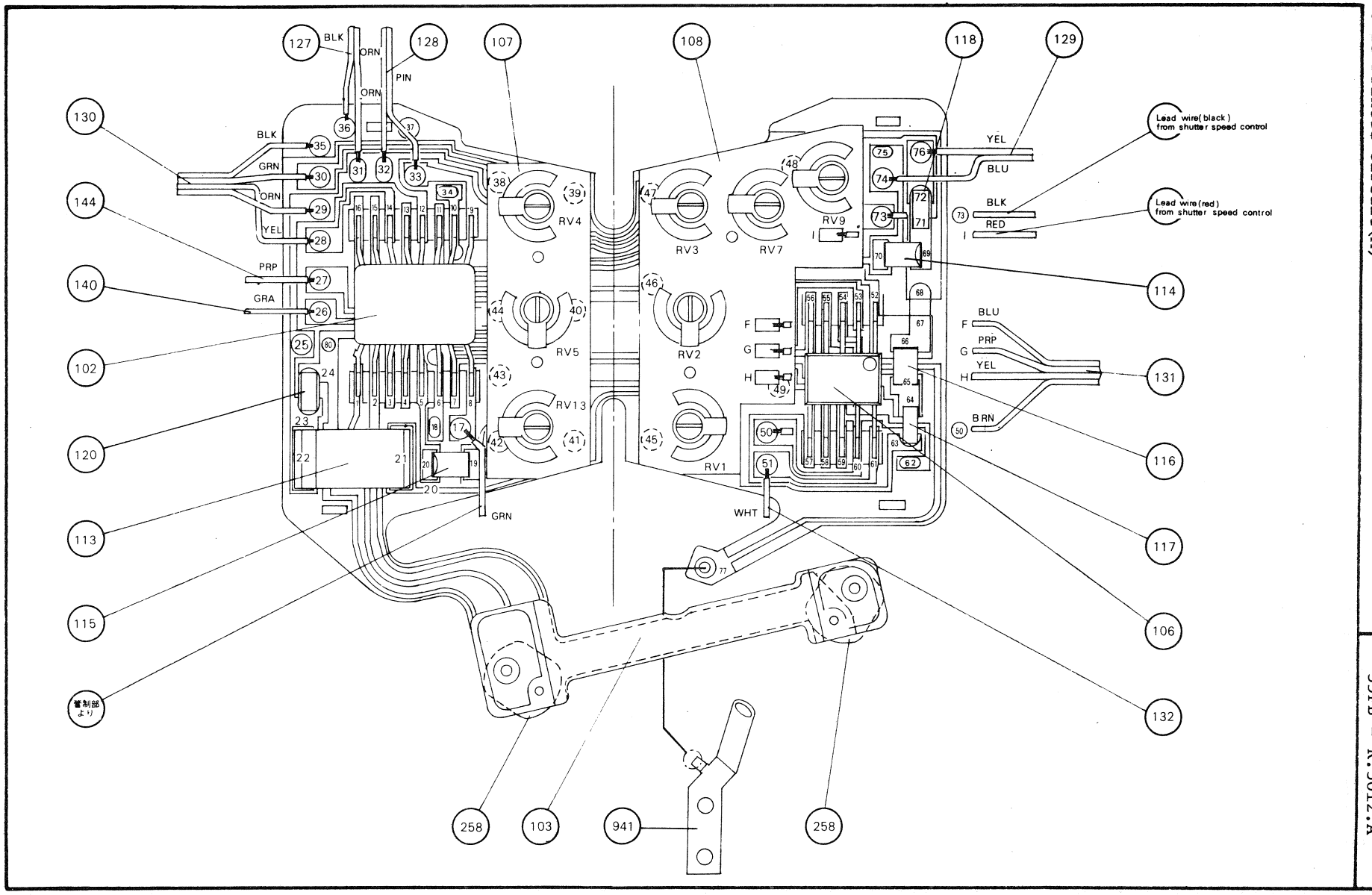
127
BLK
ORN
128
PIN
ORN
107
108
118
129
130
BLK
GRN
ORN
YEL
144
PRP
140
GRA
102
120
113
115
管制部より
RV4
RV5
RV13
RV3
RV7
RV9
RV2
RV1
YEL
BLU
BLK
RED
Lead wire(black) from shutter speed control
Lead wire(red) from shutter speed control
114
BLU
PRP
YEL
BRN
131
116
117
106
132
GRN
WHT
258
103
941
258

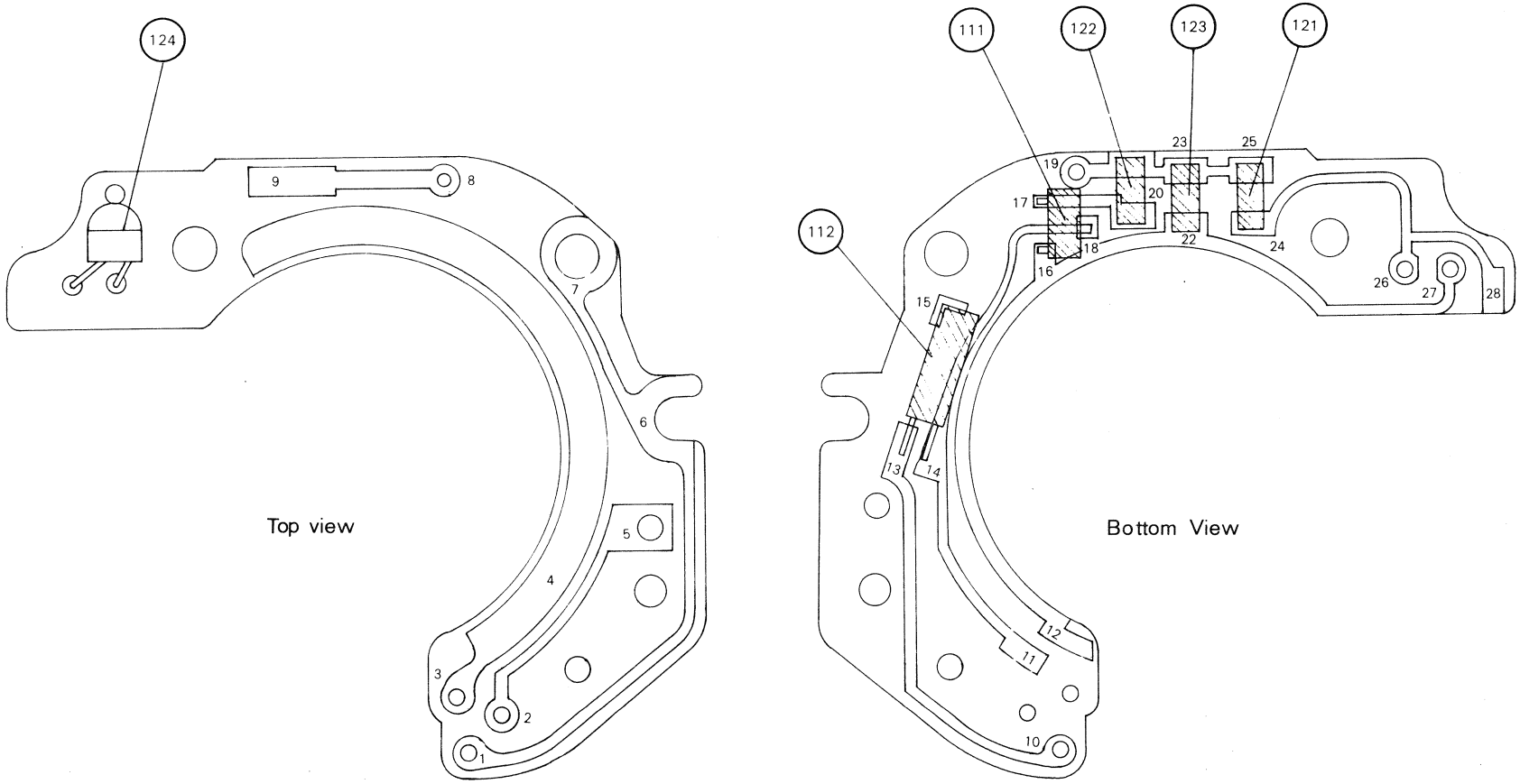
124
9
8
7
6
5
4
3
2
1
Top view
111
122
123
121
112
23
25
19
20
17
18
22
24
16
26
27
28
15
13
14
12
11
10
Bottom View

35FB - R.3012.A

Classification Code: 000					
Auto	Manual	Meter	How to check	Cause	Code No.
			Failure of memory lock	Memory Lock cord, Black(#139) shorts to body	000-01-1
				Memory lock switch(#934) shorts to body	000-01-2
				Switch(#934) does not switch OFF	000-01-3
				Mirror switch(#928) shorts to body	000-01-4
			With Trigger switch ON, Icc of Approx. 15mA	Short between Orange and Pink shutter switch cords(#128)	000-02-1
				Short between terminals 12 and 33 or between 32 and 33 on #101	000-02-2
				Self-timer switch does not switch off	000-02-3
			with shutter switch ON, Icc of 40-45mA current flows	Short between Tr + and X on #100	000-03-1
			with lever switch OFF, Icc of Approx. 2mA Too fast battery consumption	Lever switch does not switch OFF	000-04-1
				Short between Red and Orange cords (#126)	000-04- 2
				Short between terminals 11 and 12 on #630	000-04-3
			with lever switch OFF, Icc of Approx.10mA or extremely large Icc. Too fast battery consumption checker always glow on or is broken	Checker cord, Purple (#144) shorts to body	000-05-1
			with checker switch ON, needle jumps down to B-M zone limit	Resistor C(#120) unsoldered between terminals 23 and 24 on #101	000-06-1
			Failure of checker LED illumination	Lead wire A, Red (#133)	000-07-1
				Cord, Red (#133) unsoldered from #49 or #630 12	000-07-2
				Checker resistor A(#121) unsoldered between 24 and 25 on #630	000-07-3
				Checker LED(#124) unsoldered from 26 or 27 on #630	000-07-4
				Short between 27 and 28 on #630	000-07-5
			With checker switch ON, LED glows down to Vcc of approx. 1.5V With lever switch ON Normal Vcc	Checker resistor B(#122) unsoldered between 20 and 21 on #630	000-08-1
				Base of transistor (#111) unsoldered from #630 17	000-08-2
				Emitter of #111 unsoldered from #630 16	000-08-3
				Corrector of #111 unsoldered from #630 18	000-08-4

Classification Code: 000			How to check	Cause	Code No.
Auto	Manual	Meter			
			With checker switch ON, LED glows down to Vcc of approx. 1.5V	FRE cord, Orange (#130) broken	000-09-1
				#130 (Orange) unsoldered from #101 (29) or #630 (11)	000-09-2
				Checker cord, purple (#144) broken	000-09-3
				#144(Purple) unsoldered from #101 (27) or #630 (28)	000-09-4
			By use of SB-10, Auto speed becomes Time. If set at manual speed, Ready-light turns on and off	Shutter speed control cord A Brown (#131) broken	000-10-1
				#131(Brown) unsoldered from #101 (50) or #570 [S]	000-10-2
			By use of SB-10, Ready-light fails to turn ON, and Auto speed does not become 1/90 sec.	Shoe connecting contact A(#941) shorts to body	000-11-1
				Poor contact of #941	000-11-2
				Signal contact (#77) in poor contact	000-11-3
			SB-10 does not flash	Synch cord A, Blue (#142)broken	000-12-1
				#142(Blue) unsoldered from #100 (X) or shoe connecting contact B(#942)	000-12-2
				Synch cord B, Blue(#143) broken	000-12-3
				#143(Blue) unsoldered from shoe connecting contact B(#942) or synch socket(#15)	000-12-4
				Poor contact of #942	000-12-5
				Upper and lower shoe switch contact (#69, #70) does not switch ON	000-12-6
				X contact on #100 does not switch ON	000-12-7
				Synch contact (#75) in poor contact	000-12-8
			Immediately when SB-10 charged, continuous flash output occures	Synch cord A, Blue(#142) shorts to body	000-13-1
				Synch cord B, Blue(#143) shorts to body	000-13-2
				Shoe connecting contact B(#942) shorts to body	000-13-3
				Lower shoe switch contact (#70) shorts to body	000-13-4
				X contact on #100 does not turn OFF	000-13-5
				#100 (X) shorts to body	000-13-6
			When SB-10 connected to synch socket, electric shock occures at synch contact	Upper and lower shoe switch contact (#69, #70) does not switch OFF	000-14-1

Classification Code: 001			How to check	Cause	Code No.
Auto	Manual	Meter			
		No meter needle swing		Meter cord, Red on shutter speed control(R) broken	001-01-1
				Meter cord, Red on R unsoldered from #108 (I)	001-01-2
				Meter cord, Black on R broken	001-01-3
				Meter cord Black on R unsoldered from #101 (73)	001-01-4
				Meter coil on R broken	001-01-5
		With lever switch OFF, needle swings	With lever switch OFF, Icc of approx. 2mA	Lower switch does not turn OFF	001-02-1
				Lever switch cords(#126) short between Red and Orange	001-02-2
				Short between terminals (11) and (12) on #630	001-02-3
			With lever switch OFF, Icc of Approx.10mA or extremely large ICC. Checker LED always glows or is broken	Checker cord, Purple(#144) shorts to body	001-03-1

Classification Code: 010			How to check	Cause	Code No.
Auto	Manual	Meter			
	Becomes Auto speed		With SB-10 attached, warning lamp does not glows at Manual high speed	Short between terminals (51) and (57) on #101	010-01-1
				Short between [AA] and [S5] on #570	010-01-2

Classification Code: 011			How to check	Cause	Code No.
Auto	Manual	Meter			
	Time	Needle jumps up to the A-zone limit	With SB-10 attached, warning lamp does not glows at manual high speed. Auto and manual settings become Time	Shutter speed control cord A, yellow (#131) broken	011-01-1
				#131(yellow) unsoldered from #108 Ⓗ or #570 Ⓜ	011-01-2
		Needle swings Approx 8 steps toward A-zone	By use of SB-10, warning lamp does not glow at manual high speed at Auto, spprox. 1.4mS	Pattern of manual printed circuit(#570) broken between [S] and [M2]	011-02-1
			By use of SB-10, warnign lamp does not glow at certain speed down to 1/250sec. at manual high speed. At Auto, Time	Pattern of #570 broken between [S] and [M1]	011-03-1
	Failure of shutter opening	Needle jumps down to B-M zone limit		Short between #101 ⑤⓪ and #101 ⑤⑦	011-04-1
		Needle swings approx. 8 steps toward B-M zone			
	Auto	Needle jumps down to B-M zone limit	By use of SB-10, warning lamp does not glow at Manual high speed. AT Auto, failure of shutter opening;	Short between Purple wire and Blue one of #131 cord A	011-05-1
				Short between #108 Ⓖ and #108 Ⓕ	011-05-2
				Short between #101 ⑮ and #101 ③① or between #101 ⑮ and #101 ③②	011-05-3
		Needle swings 7 steps or more toward B-M zone	By use of SB-10, warning lamp does not glow at Manual high speed. At Auto, approx. 1.4mS.	Short between #101 ⑤① and #101 ⑤⑦	011-06-1
				Short between #570 [S5] and #570 [AA]	011-06-2
	Every setting becomes 1/1000sec.	Needle jumps up to A-zone limit	By use of SB-10, warning lamp does not glow at Manual high speed. At Auto, approx. 1.4mS	Shutter speed control cord A, Blue(#131) broken	011-07-1
				#131(Blue) cord unsoldered from #108 Ⓕ or #570 [M2]	011-07-2
		Needle jumps down to B-M zone limit		Short between #108 Ⓕ and RV ②	011-07-3
		Needle swings 12 steps toward B-M zone			
	Normal at 1/1000sec. and 8sec. only	Needle jumps down to B-M zone limit		Short between #570 [M2] and #570 [S5]	011-08-1
		At Auto or Bulb, the faster the speed, the more the needle swings toward B-M zone			

Classification Code: 011			How to check	Cause	Code No.
Auto	Manual	Meter			
	Normal at 1/1000sec.and 1/125sec. only	Needle swings approx. 1 - 8 steps toward B-M zone		Short between #101 (50) and #101 (51)	011-09-1
	At higher speed above cartain speed, 1/1000. At lower speed below certain speed, Time	Needle jumps up to A-zone limit or Needle swings approx. 8 steps toward A-zone	By use of SB-10, warning lamp does not glow at Manual high speed. At Auto, approx. 1.4mS	Pattern of #570 broken between [S] and [M2]	011-10-1
			By use of SB-10, warning lamp does not glow at certain speed down to 1/250sec. At Auto, Time	Pattern of #570 broken between [S] and [M1]	011-11-1
	At higher speed above certain speed, 1/1000sec. At lower speed below certain speed, slower speed than normal (8sec. becomes 3sec.)	Needle swings approx. 1.3 steps toward B-M zone	By use of SB-10, warning lamp does not glow at Manual high speed. At Auto, approx.1.4mS	Shutter speed control cord A (#131) short between a Brown and a yellow cord	011-12-1
				Short between #570 [S] and #570 [M1]	011-12-2
	At higher speed above certain speed, same as Auto. At lower speed below certain speed, failure of shutter opening, or extremely high speed	Needle jumps down to B-M zone limit		Short between #101 (50) and #101 (57)	011-13-1
		Needle swings approx. 7 or 8 steps toward B-M zone		Shutter speed control cord A (#131) short between a yellow and a purple cord	011-13-2
				Short between #108 (G) and #180 (H)	011-13-3
				Short between #570 [M1] and #570 [AA]	011-13-4

Classification Code: 100			How to check	Cause	Code No.
Auto	Manual	Meter			
			Failure of memory lock	Mirror switch cord, Grey (#140) shorts to body	100-01-1
				Mirror switch A(#927) shorts to body	100-01-2
				Mirror switch A(927) does not switch OFF	100-01-3
			Even in use of SB-10, Auto speed becomes Time	Memory lock cord, Black (#139) broken	100-02-1
				#139(Black) unsoldered from memory switch A(#934) or mirror switch B(#928)	100-02-2
				Mirror switch cord, Grey(#140) broken	100-02-3
				#140 cord(Grey) unsoldered from #101 26 or Mirror switch A(#927)	100-02-4
				Mirror switch does not turn ON	100-02-5
				Memory switch A(#934) does not turn ON	100-02-6
			With lever switch OFF, Icc becomes extremely large or approx. 10mA. Checker LED always glows or breaks. Faster battery consumption	Short between #101 26 and #101 27	100-03-1
				Shutter speed control cord A, Purple (#131) broken	100-04-1
				#131 cord (Purple) unsoldered from #108 G or #570 AA	100-04-2
Slower speed			Failure of memory lock	Mirror switch cord, Grey(#140) shorts to body	100-05-1
				Mirror switch shorts body	100-05-2
				Mirror switch does not turn OFF	100-05-3
Erratic speed			Even with SB-10 used, Auto speed becomes Time	Memory lock cord, Black (#139) broken	100-06-1
				#139 cord (Black) unsoldered from memory switch A(#934) or mirror switch B(#928)	100-06-2
				Mirror switch cord, Grey(#140) broken	100-06-3
				#140 cord(Grey) unsoldered from #101 26 or mirror swith A(927)	100-06-4
				Mirror switch does not switch ON	100-06-5
				Memory switch (#934) does not turn ON	100-06-6
A few steps slower speed				Short between #108 I and RV 7	100-07-1

Classification Code: 101			How to check	Cause	Code No.
Auto	Manual	Meter			
		Needle jumps down to B-M zone limit	With lever switch ON Icc becomes approx 30mA	Meter cord, Red on shutter speed control broken	101-01-1
				Short between #101 (26) and #101 (80)	101-02-1
		Needle jumps up to A-zone limit	With lever switch ON, Icc becomes approx. 30mA	Meter cord, Black on shutter speed control shorts to body	101-03-1
Shutter does not open		Needle jumps up to A-zone limit		Short between #101 (16) and #101 (30)	101-04-1
				FRE cord #130 short between a yellow and a Green cord	101-04-2
				Short between #630 (3) and #632 (2), or between #630 (2) and #630 (4)	101-04-3
				Short between #101 (16) and #101 (28)	101-04-4
A few steps longer speed		Needle swings 1/3 step toward A-zone than normal		Short between #108 (I) and RV (7)	101-05-1
Extraordinary speed		Needle jumps up to A-zone limit	With shutter switch ON Icc becomes approx. 16mA	Short between #101 (17) and #101 (20)	101-06-1
At EV4, approx. 1/1000		Needle swings approx. ten steps toward A-zone	Auto speed varies by rotation of FRE	Short between #101 (16) and #101 (30)	101-07-1
			Auto speed does not vary by rotation of FRE	FRE cord #130 shorts between a yellow and a Green cord	101-08-1
				Short between #630 (2) and #630 (3), or between #630 (2) and #630 (4)	101-08-2
Extraordinary speed		No Needle swing	With lever switch ON, extremely large Icc. With checker switch ON, extremely large Icc. No LED illumination	Short between #101 (25) and #101 (26)	101-09-1

Classification Code: 110			How to check	Cause	Code No.
Auto	Manual	Meter			
Time	Time		With lever switch ON, Icc of approx, 15mA. At M90 or Bulb, Time	Mech. speed changeover switch cord, purple, on shutter speed control shorts to body	110-01-1
				#100 (Mg-) shorts to body	110-01-2
			With lever switch ON, Icc of approx. 15mA	Changeover switch cord, green, on shutter speed control shorts to body	110-02-1
				Short between #101 (17) and #101 (19)	110-02-2
				Short between #100 (Mg+) and #100 (Tr-)	110-02-3
			In use of SB-10, warning lamp does not light at manual high speed	Shutter speed control cord B, White (#132) broken	110-03-1
				#132 cord(White) unsoldered from #101 (51) or #570 [S5]	110-03-2
				Trigger switch does not switch OFF	110-04-1
				Trigger switch cord(#129)shorts between a yellow and a blue cord	110-04-2
				Short between #101 (74), (75) and #101 (72), (76)	110-04-3
				Short between #100 (Tr+) and #100 (Tr-)	110-04-4

Classification Code: 110			How to check	Cause	Code No.
Auto	Manual	Meter			
Failure of shutter opening	Failure of shutter opening		With trigger switch ON, Icc of approx. 35mA	Trigger switch cord, Blue(#129) shorts to body	110-05-1
				#100 (Tr-) shorts to body	110-05-2
			With shutter switch ON, extremely large Icc	Shutter switch (#926) shorts to body	110-06-1
				Shutter switch cord, Pink(#128) shorts to body	110-06-2
			With shutter switch ON, Icc of approx. 100mA	Short between #100 (Mg+) and #100 (Mg-)	110-07-1
			With shutter switch ON, Icc of approx. 35mA	#100 (Tr+) shorts to body	110-08-1
				Trigger switch cord, yellow (#129) shorts to body	110-08-2
			With shutter switch ON, Icc of approx. 3-5mA	Short between #101 (33) and #101 (10), or between #101 (33) and #101 (34)	110-09-1
				Magnet coil of #100 broken	110-09-2
				Mech. speed changeover switch cord, purple, on shutter speed control broken	110-09-3
				Mech. speed changeover switch cord (Purple) unsoldered from #100 (Mg-)	110-09-4
				Mech. speed changeover switch cord (Green) on shutter speed control broken	110-09-5
				Mech. speed changeover switch cord (Green) on shutter speed control unsoldered from #101 (17)	110-09-6
			Icc when shutter switch switched ON is same as Icc when lever switch switched ON	Shutter switch cord, Orange (#128) broken	110-10-1
				#128 cord (Orange) unsoldered from #101 (32) or shutter switch A(#925)	110-10-2
				Shutter switch cord, Pink (#128) broken	110-10-3
				#128 cord (Pink) unsoldered from #101 (31) or shutter switch B(#926)	110-10-4
				Shutter switch does not switch ON	110-10-5
				Trigger switch does not switch ON	110-10-6
				Trigger switch cord, yellow (#129) broken	110-10-7
				#129 cord (yellow) unsoldered from #101 (76) or #100 (Tr+)	110-10-8
				Trigger switch cord, Blue(#129) broken	110-10-9
				#129 cord (Blue) unsoldered from #101 (74) or #100 (Tr-)	110-10-0

Classification Code: 111			How to check	Cause	Code No.
Auto	Manual	Meter			
Failure of shutter opening	Failure of shutter opening	No needle swing	With lever switch OFF, extremely large Icc	Lever swith cord, Red(#126) shorts to body	111-01-1
				Plus cord A, Red(#133) shorts to body	111-01-2
				Plus cord B, Red(#134) shorts to body	111-01-3
				Lever switch (#487) shorts to body	111-01-4
				Battery contact B ⊕ (#49) shorts to body	111-01-5
				MD external contact lug(#919) shorts to body	111-01-6
			With lever switch ON, extremely large Icc (Measure the Icc by disconnecting power supply cord, orange (#127) from #101 31) No resistance (0Ω) between #127 and body	Lever switch cord, Orange(#126) shorts to body	111-02-1
				Power source cord, Orange(#127) shorts to body	111-02-2
				Magnet plus cord, Orange(#135) shorts to body	111-02-3
				Lever switch (#488) shorts to body	111-02-4
				#100 (Mg+) shorts to body	111-02-5
				Power supply cord(#127) shorts between a Orange and a black cord	111-02-6
			With lever switch ON, extremely large Icc. No resistance (0Ω) between #101 31 and body	Shutter switch cord, Orange(#128) shorts to body	111-03-1
				FRE cord, Orange (#130) shorts to body	111-03-2
				Shutter speed control cord, purple (#131) shorts to body	111-03-3
				#570 [AA] shorts to body	111-03-4
				Shutter switch (#925) shorts to body	111-03-5
				Short between #101 (31), (32) and #101 (35), (36)	111-03-6
			No Icc observed. Checker LED does not illuminate	Power supply cord, Black(#127) broken	111-04-1
				#127 cord, Black(#127) un-soldered from #101 (36) or Battery chamber earth contact (#45-1)	111-04-2
				Battery plus contact B(#49) in poor contact	111-04-3
				Battery earth contact (#45-1) in poor contact	111-04-4
			No Icc observed	Lever switch cord, Red(#126) broken	111-05-1
				#126 cord(Red) unsoldered from Lever switch (#487) and MD external contact lug (#919)	111-05-2
				Lever switch cord, Orange (#126) broken	111-05-3

Classification Code: 111			How to check	Cause	Code No.
Auto	Manual	Meter			
Failure of shutter opening	Failure of shutter opening	No needle swing		Lever switch cord, Orange(#126) unsoldered from Lever switch (#488) or external contact lug (#919)	111-05-4
				Power source cord, Orange(#127) broken	111-05-5
				#127 cord (Orange) unsoldered from #101 (31) or the contact lug (#919)	111-05-6
				Plus cord B, Red (#134) broken	111-05-7
				#134 cord (Red) unsoldered from battery contact B ⊕ (#49) or the external contact lug (#919)	111-05-8
				Lever switch does not turn ON	111-05-9
		Needle jumps up to A-zone limit Needle swings toward A-zone away from normal position	With lever switch ON, Icc of approx. 10mA	Short between #101 (73) and #101 (70), or between #101 (73) and #101 (74)	111-06-1
		Needle swings approx. one step toward B-zone away from normal position	With lever switch ON, Icc of approx. 5mA. With trigger switch ON, Icc of approx. 8mA.	Short between #101 (17) and #101 (6), or between #101 (17) and #101 (18)	111-07-1
		Needle jumps up to A-zone limit	With lever switch ON, extremely large Icc (at auto speed) With lever switch ON, normal Icc (at manual)	Shutter speed control cord B, White(#132) shorts to body	111-08-1
		No needle swing		#570 [S5] shorts to body	111-08-2
			Unsoldering FRE cords, yellow and green(#130), from IC printed circuit, measure the resistance. If infinity value detected, one of the causes to the right considerable Normal value: approx. 9.45 K at ASA 100, F5.6	Yellow or Green FRE cord (#130) broken	111-09-1
				Sliding brush A(#685) in poor contact	111-09-2
				Brush A(#682) in poor contact	111-09-3
				Sliding brush B(#698) in poor contact	111-09-4
				Sliding brush A(#685) unsoldered from #630 (5)	111-09-5
				FRE(#680) unsoldered from FRE conducting plate(#684)	111-09-6
				FRE cord, yellow (#130) unsoldered from #630 (3)	111-09-7
				FRE cord, green(#130) unsoldered from #630 (2)	111-09-8
				FRE cord, yellow(#130) undoldered from #101 (28)	111-10-1

Classification Code: 111			How to check	Cause	Code No.
Auto	Manual	Meter			
Time	Time	Needle jumps down to B-M zone limit		FRE cord, Green(#130) unsoldered from #101 (30)	111-10-2
				Short between #101 (16) and one of #101 (29), (31), (32)	111-10-3
				Short between #101 (27) and #101(28)	111-10-4
				Short between #101 (30) and on of #101 (29), (31)	111-10-5
				Short between #101 (14) and one of #101 (31), (32)	111-10-6
				Short between #101 (28) and #101 (29)	111-10-7
				Short between Green and Yellow FRE cord(#130)	111-10-8
Extraordingary speed	Time	Needle jumps up to A-zone limit	With SB-10 used, manual high speed warning lamp does not glow. Both at Auto and Manual, Time	Shutter speed control cord, Yellow(#131) shorts to body	111-11-1
				#570 [M1] shorts to body	111-11-2
			When SB-10 used, warning lamp glows properly at Manual high speed. At Auto and Manual, Time 1 - 2mA higher Icc than normal	Shutter speed control cord, Brown (#131) shorts to body	111-12-1
				#570 [S] shorts to body	111-12-2
				FRE cord, Green(#130) shorts to body	111-12-3
				FRE conducting plate (#684) shorts to body	111-12-4
				Sliding brush A(#685) shorts to body	111-12-5
				FRE cord (#130) shorts between a Green and a Black cord	111-12-6
				Short between #101 (30) and #101 (35)	111-12-7
				Short between #630 (1) and #630 (2)	111-12-8
			When SB-10 used, warning lamp glows properly at Manual high speed. At Auto and Manual, Time (Normal Icc)	Shutter speed control cord, Blue(#131) shorts to body	111-13-1
				#570 [M2] shorts to body	111-13-2
				FRE cord, Yellow (#130) shorts to body	111-13-3
				Brush A(#682) or Brush mount (#683)	111-13-4
				Sliding brush B(#698) shorts to body	111-13-5
				Short between one of #630 (1), (6), (7) and one of (3), (4)	111-13-6
				Short between one of #630 (6), (7) and #698 brush B	111-13-7
				Short between #630 (4) and checker switch (#633)	111-13-8
	1/4 - 1EV longer speed than normal	Needle jumps up to A-zone limit by 5 steps with lever switch on, and 7 steps with Trigger switch ON	With shutter switch ON, Icc of approx. 30mA	Short between #101 (11) and #101 (33)	111-14-1
				Short between #101 (71) and #101 (73)	111-14-2
	High speed slower than normal Low speed, normal	Needle jumps up to A-zone limit	With shutter switch ON Icc of approx. 16mA	Short between #101 (17) and #101 (20)	111-15-1

Section VI. Inspection Standard

INSPECTION STANDARD FOR REPAIR

Item	Position	Subject	Tool
Wind-up & Shutter release Mechanism	Wind-up lever	Wind-up touque: Within 1.5kg.cm (No film loaded) Within 4.5kg.cm (Film loaded)	Torque meter
	Spool	Spool friction: 200 - 260g	J15003
	Sprocket	Sprocket slack (at wind-up limit): within 0.8mm at top of tooth	J18064
	Wind-up coupling	Wind-up angle at start: -1° - +2° at wound-up: 132° - 138° Wind-up torque: Equal to or less than the torque on wind-up lever.	Torque meter
	Rewind button	To be set at the position pushed 2.7mm above bottom cover surface	Vernier
	Rewind crank	Friction toruqe when no film loaded: 25 - 40g.cm	J5018
	Shutter release button	Shutter-release force: 240 - 400g	J5019
		Full Stroke: 2.7 ±0.3mm	J18002
		Release stroke: Shutter should be released when the button depressed below #468 down to 0.4mm above #469 (Button's stroke: Approx.1.7mm)	
	MD releasing shaft	Shaft protrusion height: $0.7^{+0.3}_{-0.2}$ mm	Vernier
		Shaft-actuating power 500g or less	Vernier
		Shaft's height to release shuttrr above bottom plate surface: 3.4mm or less	Vernier
Shutter Accuracy	Exposure time		J19022-1 When in use of different model from J19022-1: Auto Measure between EV14 and EV15. 1/1000, 4, 8sec.: ±0.65EV 1/500 - 2sec.: ±0.5EV MANUAL 1/1000 - 1/250 sec.: ±0.525EV 1/125: +0.525EV -0 EV 1/60 - 8sec.: ±0.35EV

Shutter speed setting (or theoretical speed	Standard	Allowance (ms) Auto	Allowance (ms) Manual
1000	0.98	0.62- 1.54	0.68- 1.41
500	1.95	1.38- 2.76	1.36- 2.81
250	3.91	2.76- 5.53	2.72- 5.63
125	7.81	5.53- 11.0	7.81- 11.2
60	15.6	11.0 - 22.1	12.2 - 19.9
30	31.3	22.1 - 44.3	24.6 - 39.9
15	62.5	44.2 - 88.4	49.0 - 79.7
8	125	88.4 - 177	98.1 - 159
4	250	174 - 354	196 - 319
2	500	354 - 707	392 - 637
1	1000	707 - 1414	785 - 1275
2	2000	1414 - 2828	1569 - 2549
4	4000	2549 - 6277	3138 - 5098
8	8000	5098 -12553	6277 -10190

Item	Position	Subject	Tool
Shutter Accuracy	Shutter speed difference	Shutter speed difference between the adjacent settings: 1/1000 - 1/125sec.:1.2 - 3.4 times 1/60 - 8sec: 1.4 - 2.8 times	J19022-1
	Uneven exposures (in one frame)	Allowable exposure difference: Max. 0.25EV among the values measured at Start(S), Center(C) and End(E), setting to 1/1000sec.	J19033
	Uneven exposures (among frames)	When measured at Auto-speed 1/15sec., ASA100, F5.6 and LV9 five times, the speed deviation should be within 10ms.	J19022-1
	Self-timer	Can be set for 8 - 14sec. delay. Setting "Cancellable" by manually rotating back self-timer lever to the memory-lock position.	Stop-watch
	X contact	Time lug: 0.3 - 1.0ms(Full open: 2.2ms or more)	J19008-1
		Contact efficiency:70% or more(specified 1ms, 2.5ms)	J19028-1
		Insulation: 30MΩ or higher	
Exposure meter accuracy	Needle indication accuracy	ASA100 compensation 0	J19022-1 J18041-1
		cd/m^2 / EV / F No. / Meter needle indication	
		2 / 4 / F8 / To be within the range of the center "0" of the digit 1000	
		2040 / 14 / F4 / To be within the range of "4"	
		In case of the other combinations of the settings, meter needle should be within the range of the digit to show theoretical speed.	
	Meter needle Starting position	With lever switch OFF, the needle should be locked above the center of B-M zone.	Visual Inspection
	Infinity( ) coincidence	Coincidence:±30" Conspicuous blurs should not be visible at four corners of the viewfinder.	J19001 J18010
	Parallax	Parallax: Within 0.5mm vertically and horizontal	J18006 Lens: 50mmf1.4
	Frame coverage	At least 93% vertically and horizontally at the center of the viewfinder	
	Viewfield frame	Inclination: within 1°30'	
	F No.window position	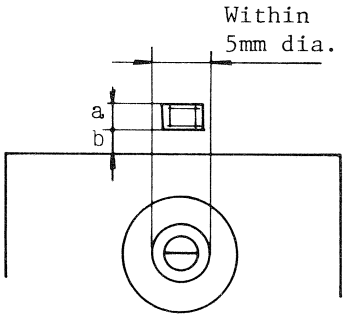 F No. window position Sideways: Within 5mm dia. of split-image spot Height : b=0.3a-1.5a Position of frame on J18063 Within the F No.window The window's inclination should not be conspicuous	J18063 Visual inspection

Item	Position	Subject	Tool
Finder accuracy	Shutter speed film position	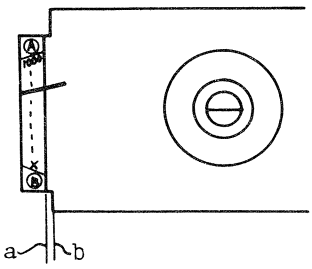 The film and (a) and finder frame end (b) should be aligned within an allowable interval of max.0.2mm. (a) should not exceed (b). Vertical deviation of the film not allowed.	Visual inspection
	Green needle and speed indication digit alignment	Meter needle should overlay at least half of the hight of speed digits or letter (A, B, M). Be sure to check at click position. 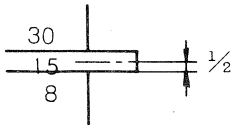	Visual inspection
Lens mount	Aperture coupling lever	Height: $3.1^{+0.1}_{-0}$mm(after shutter cocking) 3.5mm or less(Before shutter cocking) Height difference between after and before shutter cocking: 0.15mm or more	J18004
		Stroke: 7.1mm or more	
		Power to depress the lever: 90 - 120g at 3.1mm height	J18003
	Aperture coupling ring	Start position $52.5^{\circ}{}^{+0^{\circ}}_{-1^{\circ}}$	J18063
		Max. rotation angle $112.5^{\circ}{}^{+3^{\circ}}_{-1^{\circ}}$	J18058
		Rotation torque Min. aperture direction 950g·cm Max. aperture direction 100 - 350g·cm	J18058
	Back focus	Flange back dimension 46.67 ±0.2mm	J18001-1
		Parallelism allowance within 0.02mm	
		Height difference between outer and inner rails 0.23 ±0.02mm	
Others	Battery checker	Lowest voltage for illumination: 2.25 ±0.15 (with lever switch ON)	J19024
	Ready light	Shutter dial setting — LED Auto — ON 1/1000 - 1/250 (Manual) — OFF 1/125 - B (Manual) — ON	J15147
	Pressure plate	Flatness within 0.02mm	