Mamiya

REPAIR MANUAL

M645 SUPER

CONTENTS

1 GENERAL SPECIFICATIONS

2 CAMERA BODY

3 ROLL FILM HOLDER

1. GENERAL SPECIFICATIONS

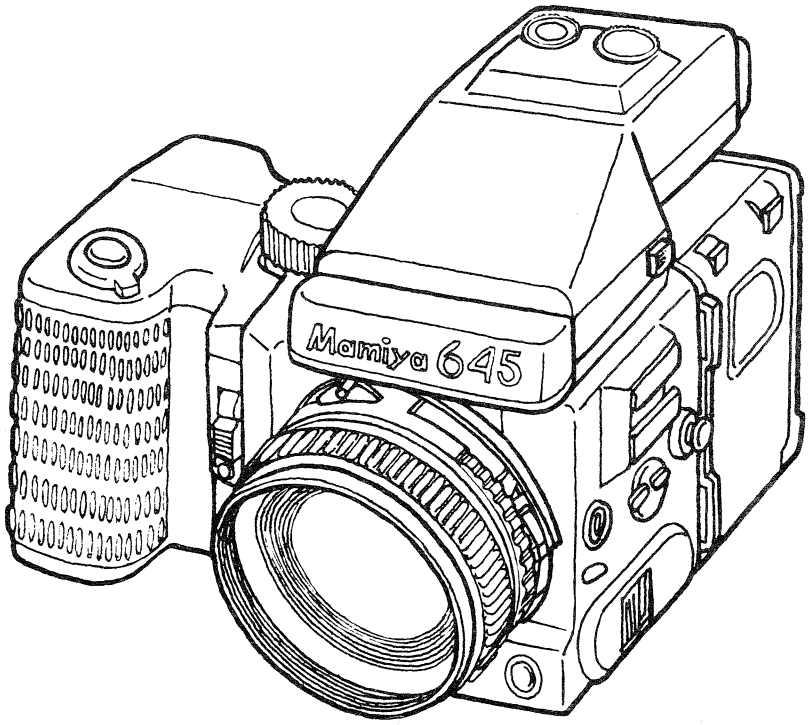

1. GENERAL SPECIFICATIONS

The camera system consists of the following components: Camera body, lens, viewfinder, film holder, film advance mechanism and power drive.
The camera body and film holder have the respective parts assembled into one unit, and high-reliability functions are incorporated into each unit, thus assuring the entire reliability of this system and at the same time enhancing working efficiency in assembly processes.

1. CAMERA BODY

The film back enchanging mechanism is incorporated without changing the flange back of current M645 series, thus moving the mirror to the 3 mm lens side, and to flatten the body back face, the shutter curtain shafts are located ingeniously as a lateral focal palane-shutter, thereby substantially reducing the camera body width.

2. FOCAL PLANE SHUTTER

For the lateral focal plane shutter, the film winding mechanism assembled into one unit including the shutter release mechanism by electronic moving coil (MC) and manual control mechanism M/60 is located at the lower part, and besides 3 shutter curtain shafts, to secure a sufficient space for preliminary and backward run, 2 rollers are provided, thus increasing the travelling distance, and the shutter speed is increased accordingly, so that the mass of constituent parts is reduced, and ball bearings are employed, increasing the brake power. For the shutter release mechanism by electronic moving coil (MC), the release of 1st and 2nd curtains is performed with the same MC, and the mirror latch is disengaged via coupling mechanism with 1st operation of MC, thus operating 1st curtain, then the release signal for 2nd curtain is transmitted, thereby disengaging 2nd curtain latch, whereby it allows 2nd curtain to run.

3. MIRROR

The mirror mechanism consists of a unit having a built-in a mirror housing, finder screen basement, and finder screen fixing frame and a driving mechanism inside the winding unit. The driving mechanism has a compactly built-in centrifugal governor used for RB67 and RZ67 series to assure a quiet and stable operation.

6. AE-PRISM FINDER

This finder has a Dachprism which gives an upright, lateral correct image and a built-in quartz control digital circuit and analog measuring circuit, thus allowing TTL automatic exposure of aperture priority shutter AE. This finder has a manual release control function, thereby permitting manual measuring.

The measuring system can be selected from among 3 systems: average measuring with the same system as RZ67 AE prism finder, spot measuring and average/spot automatic changeover measuring systems.

For average/spot automatic changeover measuring, when the difference in brightness between average and spot measuring is less than 0.75 EV (the difference is small or spot measuring brightness is higher), the average measuring mode is selected. When it is 1.5 EV or more (spot measuring brightness is lower), the spot measuring mode is selected. When it is between 0.75 and 1.5 EV, the exposure value is obtained as its in-between value, thus permitting automatic correction against a bright light source. For the circuit configuration, information from the measuring system such as aperture from the lens and film sensitivity information from the film holder are introduced to operational IC, and shutter release information calculated according to analog processing is converted to a digital value by the double integrating A/D conversion system, which is in turn sent to control IC. Then the signal goes into the LED display circuit to illuminated LEDs infinder. Simultaneously a quartz-control shutter time signal goes into circuits of camera body.

7. POWER DRIVE

The operating electric signal is connected to the camera body, using 4 contact pins and ground, two of which are for shutter release and the remaining two of which are for control. The film advance is started with a photographing completion signal from the camera body, and a film advance completion signal stops film winding. When a power drive is mounted and the film holder is replaced, the film advance is started if the selector switch is set at "START" since no shooting end signal is present, thus completing all preparations for the exposure. After the given number of exposures, the film is automatically advanced, thereby stopping operation, using the timer.

4. FILM ADVANCE MECHANISM

The mechanism is divided into the camera body side film winding unit and the roll film holder side winding unit. The camera body side film winding unit has a built-in shutter cocking, mirror charge, film advance and coupling lever charge (Winding stop release/reverse turning prevention) mechanism: film advance is stopped by a 360-degree turn of wind-up crank. The roll film holder side unit has a built-in film advance, manual wind-up mechanism and exposure counter detective mechanism: a holder side signal pin is located in the position corresponding to the signal lever coupled with the camera body. When the winding mechanism in film holder is would, the back cover is opened and when the film holder is not attached to camera body, the signal lever maintains a neutral position by the spring action; film winding mechanism in camera body stops in one full turn. When the film holder is in the state before a film is advanced, the signal pin protrudes to the camera body side, thereby releasing the wind-up stop via the signal lever of camera body. Just before the mechanical operation of the shooting is completed, the camera body, side signal lever pushes the signal pin of the film holder, thereby actuating it, whereby the film advance stop mechanism in film holder is released.

5. ELECTRONIC CIRCUIT

This circuit digitally converts and controls each analog data with 32.768 kHz quartz oscillation as fundamental, centering about C-MOS and IC at the camera body side.

The present shutter speed data is inputted from the shutter speed dial, and the aperture, shutter speed, film sensitivity, power supply and release signal are inputted and outputted to AE prism finder, using 15 terminals. Start signal of measuring exposure and shutter release signal are given through the contacts of auxiliary release socket and winder terminals. Film wind-up completion signal and shooting completion signal appear through winder terminals. Iso sensitivity input signal and dark slide input signal are given from the film holder.

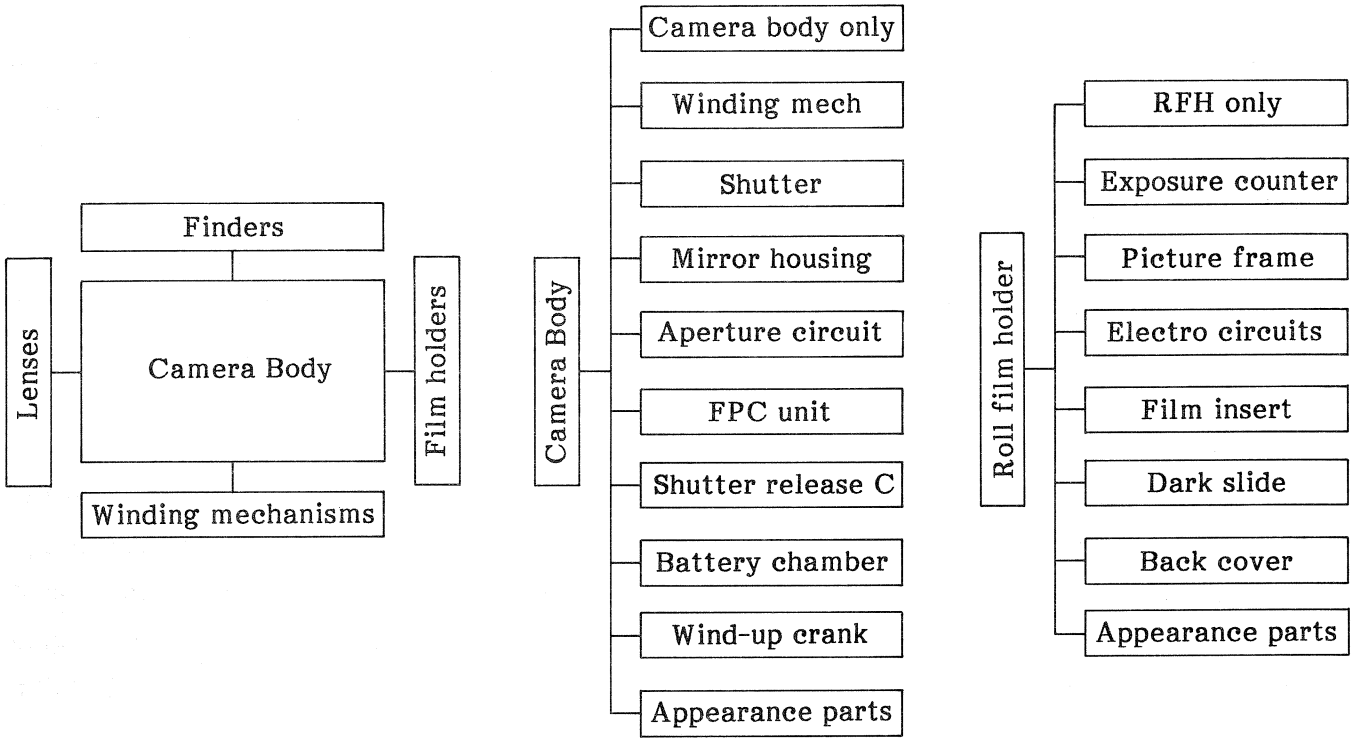
Finders
Lenses
Camera Body
Film holders
Winding mechanisms
Camera Body
Camera body only
Winding mech
Shutter
Mirror housing
Aperture circuit
FPC unit
Shutter release C
Battery chamber
Wind-up crank
Appearance parts
Roll film holder
RFH only
Exposure counter
Picture frame
Electro circuits
Film insert
Dark slide
Back cover
Appearance parts

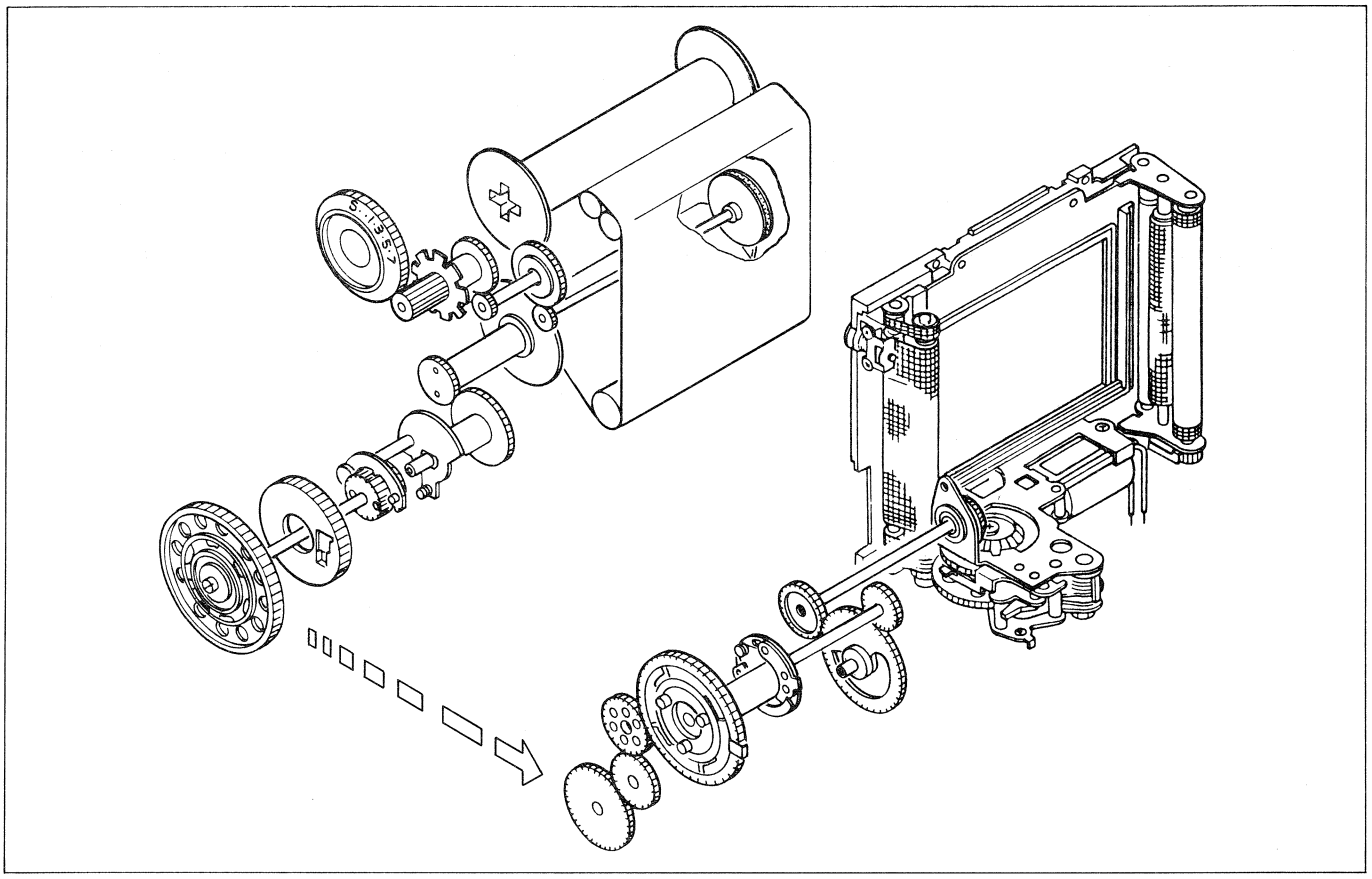

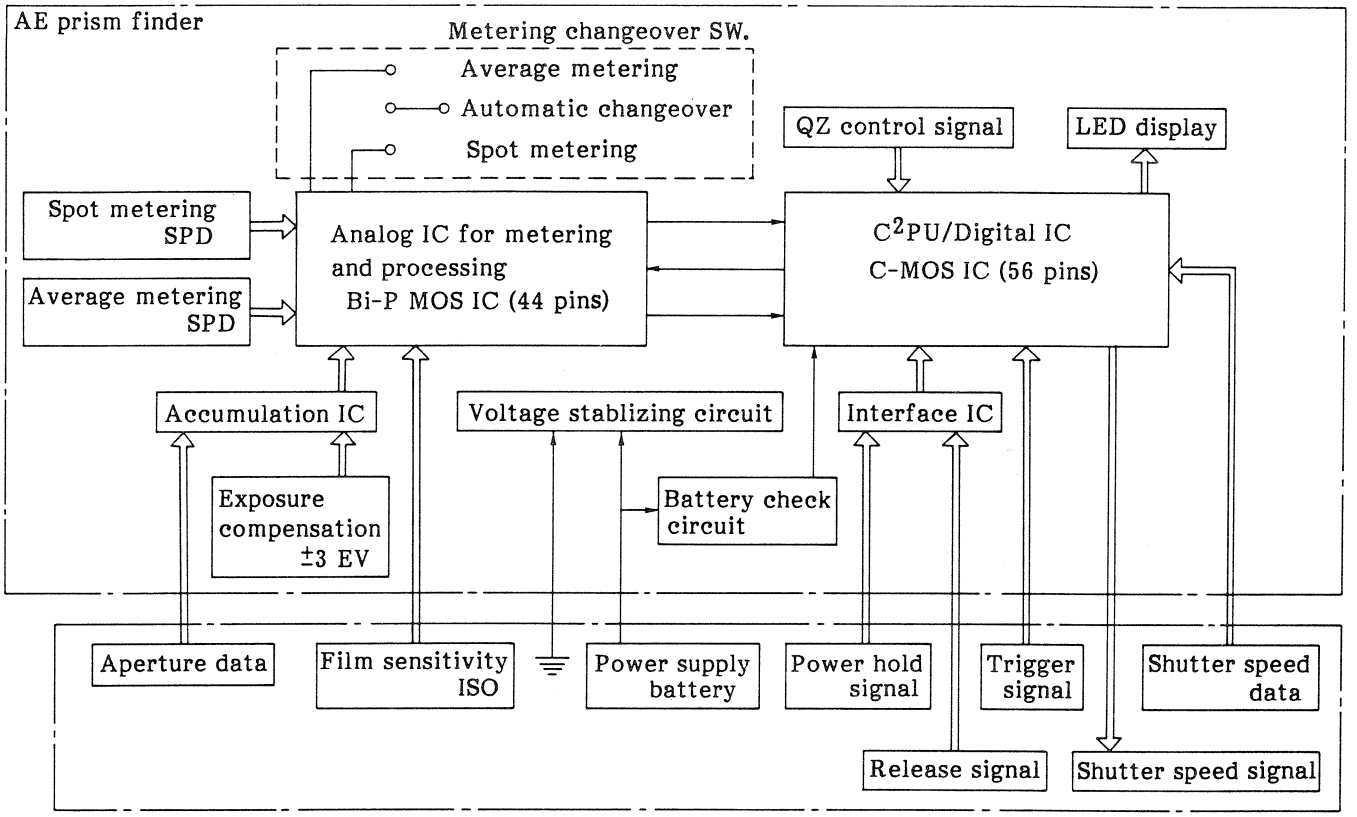
AE prism finder
Metering changeover SW.
Average metering
Automatic changeover
Spot metering
QZ control signal
LED display
Spot metering SPD
Average metering SPD
Analog IC for metering and processing Bi-P MOS IC (44 pins)
C2PU/Digital IC C-MOS IC (56 pins)
Accumulation IC
Voltage stablizing circuit
Interface IC
Exposure compensation ±3 EV
Battery check circuit
Aperture data
Film sensitivity ISO
Power supply battery
Power hold signal
Trigger signal
Shutter speed data
Release signal
Shutter speed signal

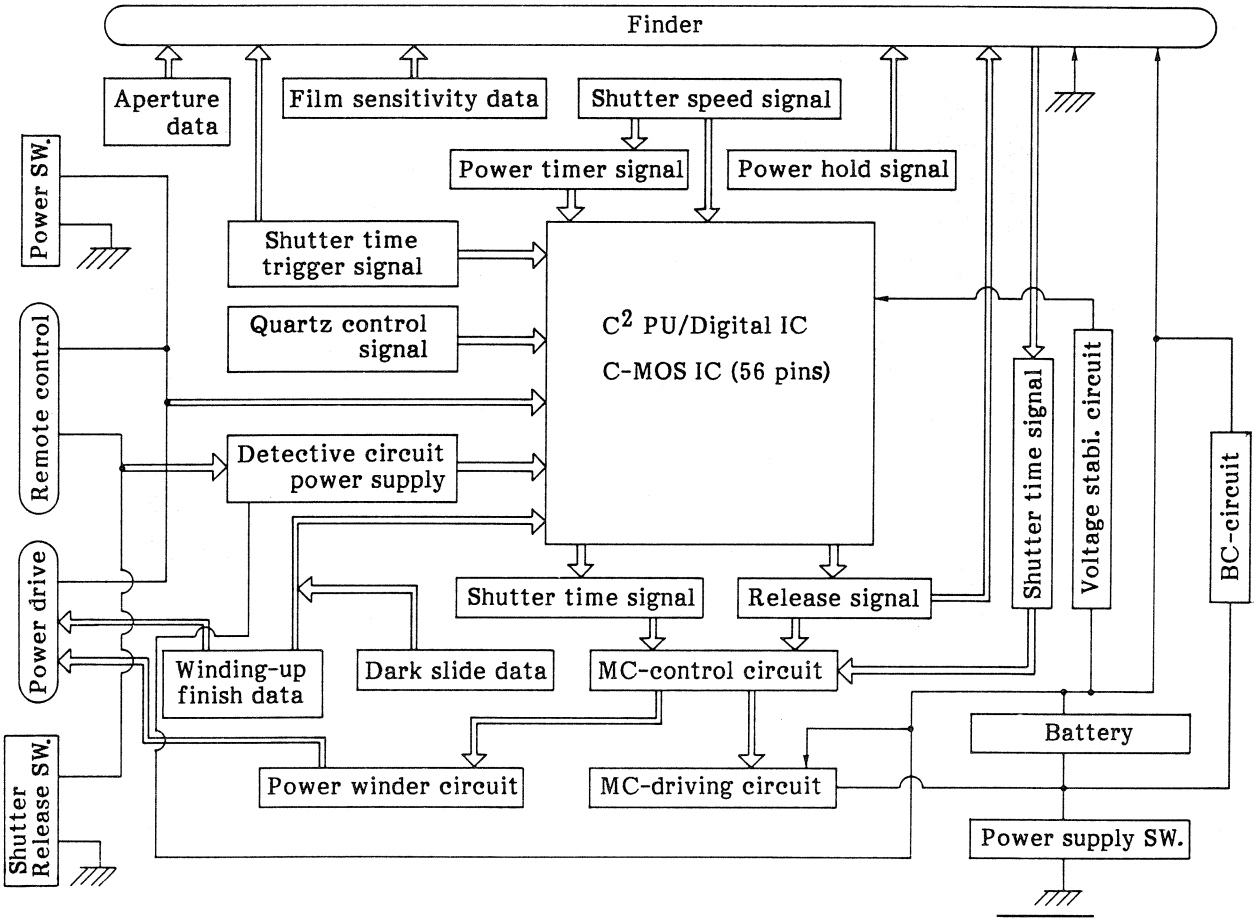
Finder
Aperture data
Film sensitivity data
Shutter speed signal
Power timer signal
Power hold signal
Power SW.
Shutter time trigger signal
Quartz control signal
C2 PU/Digital IC C-MOS IC (56 pins)
Remote control
Detective circuit power supply
Shutter time signal
Voltage stabi. circuit
BC-circuit
Power drive
Shutter time signal
Release signal
Winding-up finish data
Dark slide data
MC-control circuit
Battery
Shutter Release SW.
Power winder circuit
MC-driving circuit
Power supply SW.

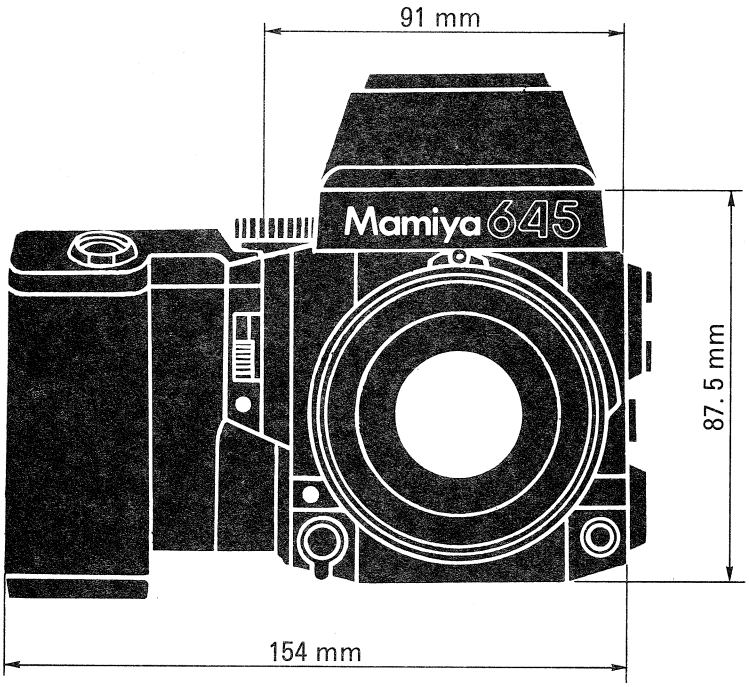
91 mm
Mamiya 645
87.5 mm
154 mm

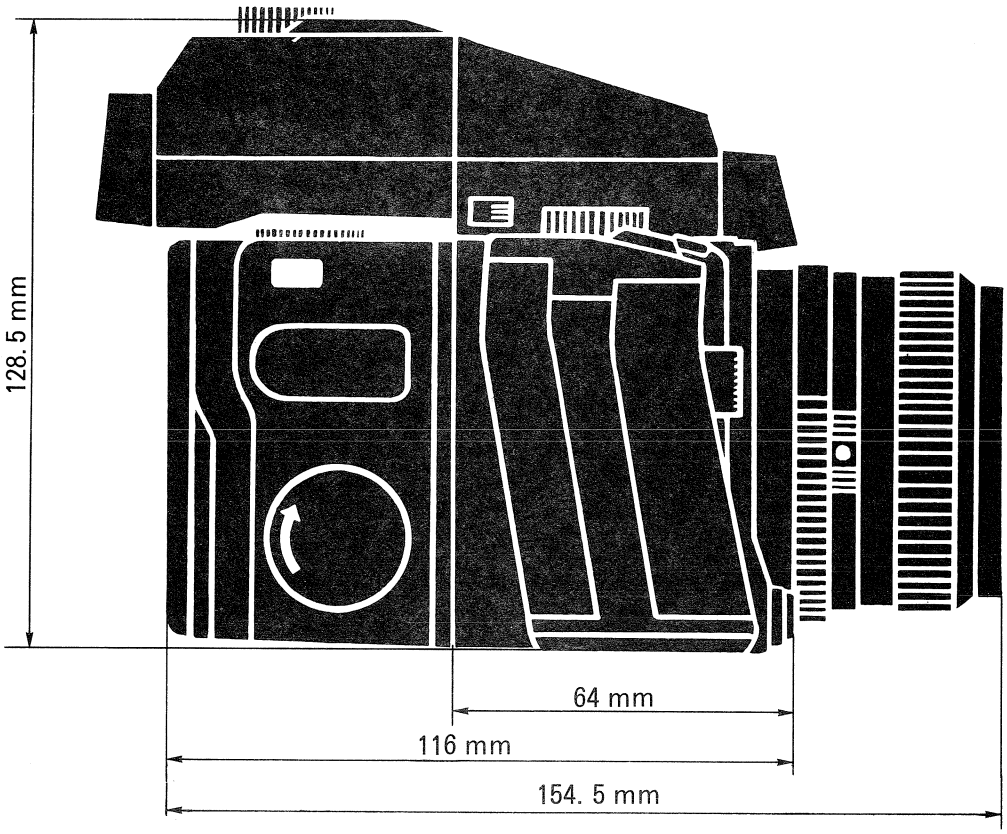
128.5 mm
64 mm
116 mm
154.5 mm

CAMERA TYPE	: 6 x 4.5 cm format, electronically controlled focal-plane shutter, Single Lens Reflex.
ACTUAL FILM IMAGE SIZE	: 56 x 41.5 mm
FILM TYPE	: 120 Roll Film (15 exposures), 220 Roll Film (30 exposures) 6 x 45 cm format, Polaroid Land Pack Film (100 & 660 Series), 135 Roll Film (36, 24, 12 exposures).
STANDARD LENS	: Mamiya-Sekor C 80 mm f/1.9 Mamiya-Sekor C 80 mm f/2.8 N
LENS MOUNT	: Mamiya M645 Bayonet Mount.
SHUTTER	: Moving coil, electronically controlled horizontal focal-plane shutter.
SHUTTER SPEED	: B, 4 - 1/1000 sec. (Quartz controlled) Mechanical shutter speed of 1/60 sec.
SHUTTER RELEASE	: Electro-magnetic release and Mechanical release (1/60 sec.) with shutter release lock provision.
MIRROR	: Instant return, with Mirror lock-up provision.
INTERCHANGEABLE FINDER	: Waist Level Finder N Prism Finder N AE Prism Finder N
INTERCHANGEABLE FOCUSING SCREEN	: Type A (Matte) Type A4 (Checker) Type B (Rangefinder Spot) Type C (Microprism) Type E (Rangefinder Spot/Microprism) Standard equipment
FIELD OF VIEW	: 94% of the horizontal and vertical picture area visible.
EXPOSURE COUNTER	: Progressive type, automatic reset. Automatically changes with insertion of 120/220 Roll Film Insert. 135 Roll Film Holder counts up to 36.
FILM ADVANCE	: Film transport by a signal turn of the Wind-up Crank N and Power Drive N is also available.
INTERCHANGEABLE FILM HOLDER	: 120 Roll Film Holder N 220 Roll Film Holder N 135 Roll Film Holder N Polaroid Land Pack Film Holder N

BATTERY CHECK	:	Depressing the Battery Check Button illuminates red LED if battery is satisfactory.
FILM SPEED RANGE	:	ASA/ISO 25 - 6400
FLASH SYNCHRONIZATION	:	X (1/60 sec.)
REMOTE CONTROL	:	Camera has remote control capability by using the Power Drive N in combination with the Transmitter/Receiver MZ.
DEMENSION	:	91 (Width) x 87.5 (Height) x 116 (Length) mm (with 120 Roll Film Holder N)
Weight	:	895 g (with 120 Roll Film Holder N, and without battery)

2. CAMERA BODY

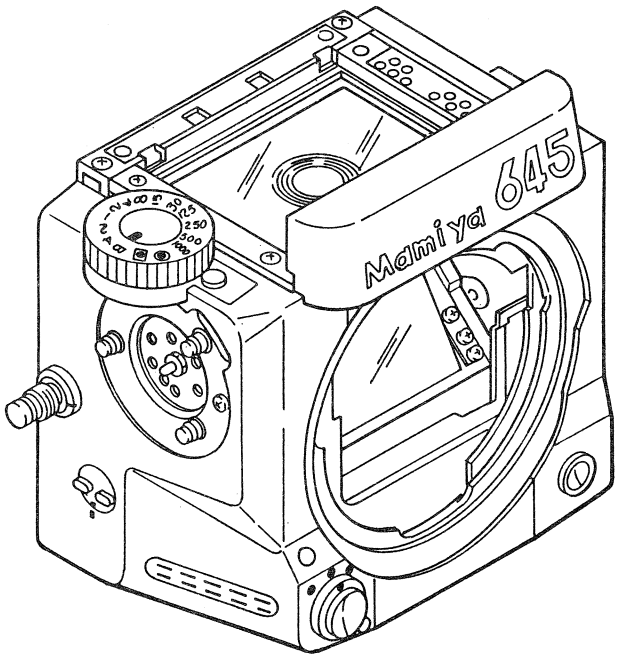

2-1 OUTLINE OF MECHANISM

1 SIGNAL TRANSMITTING LEVER OPERATION

1 : F1 gear
2 : Cam
3 : Film advance lever
4 : S inverting lever
5 : Signal transmitting lever
6 : Counter signal lever
7 : W contact

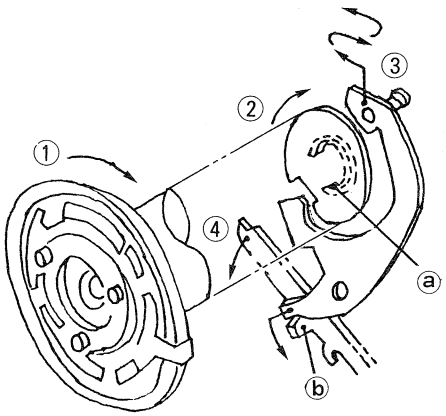

Fig. 1

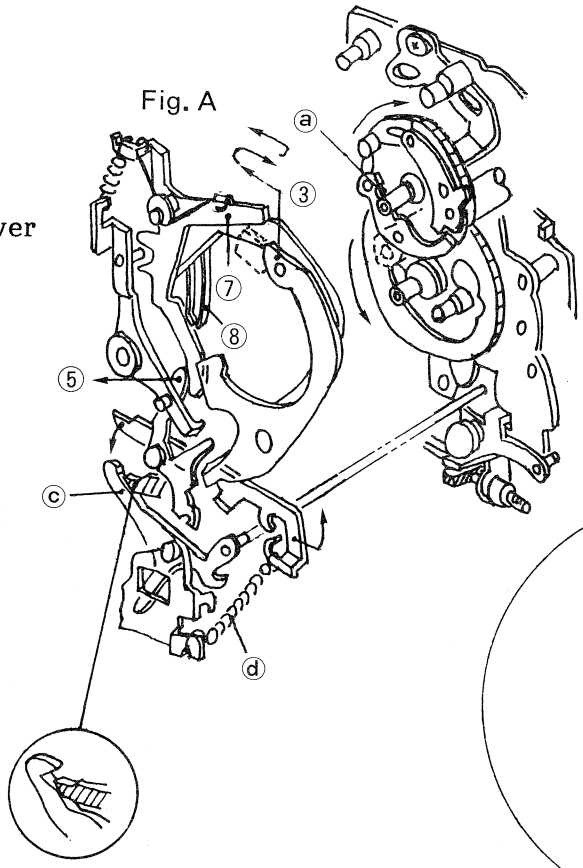

Fig. A

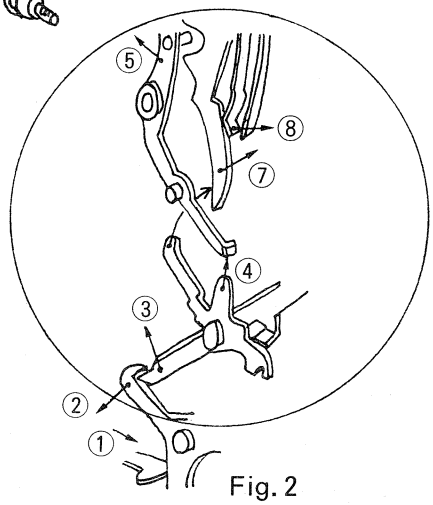

Fig. 2

1. When F1 gear (shown in Fig. 1) coupled with the film advance crank is would up, operation is started in the numerical order as illustrated, film advance lever ③ moves counterclockwise along cam ② direct coupled to ①, part ⓑ is pushed, ⑤ directly coupled to ④ also operates in the same direction, the tip of ④ is in mesh with lever ⓒ (shown in Fig. A), and it is charged with spring ⓓ.
   Then, ⑤ moves in the arrow direction, whereby ⑥ starts to lower. At the same time, film advance lever ③ changes the movement clockwise by cam motion, whereby ⑥ lowers completely.
   Further, when the film is advanced, the movement changes in the counterclockwise direction, but the tip of ③ hits against that of ⑥, thus stopping film advance crank movement. On the other hand, winder signal contact ⑦ is OFF since ⑥ lowers.

2. The release receives the movement of wind-up unlocking lever ① (within the shutter unit), which operates in the numerical order as shown in Fig. 2.

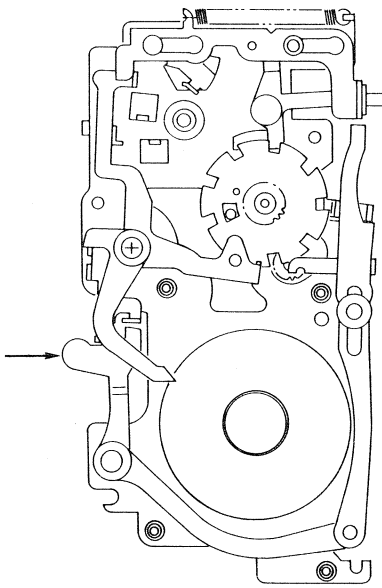

Fig. 3

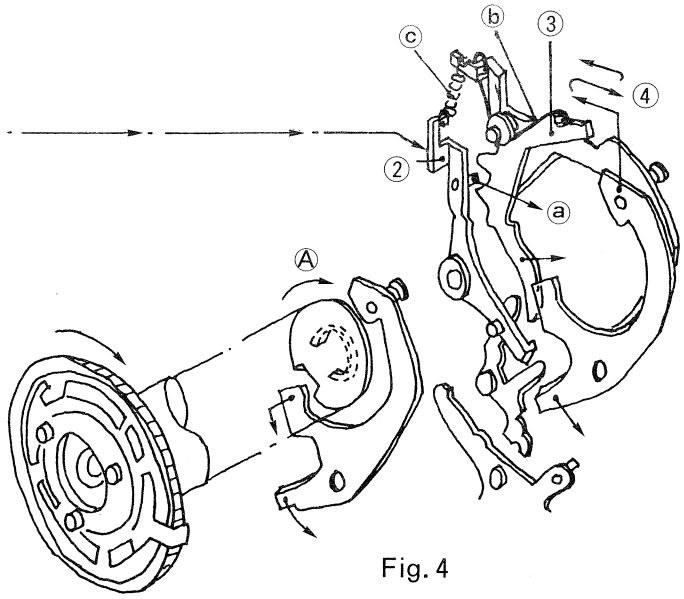

Fig. 4

For the film winding mechanism of camera body unit, since signal lever ② maintains a neutral position by spring ⓒ, film winding stop lever ③ stops lever ④ by the spring action, thus allowing a 360-degree turn film winding. (See Fig. 4)

When the film holder is installed on the camera body and the film holder side is in a state before film winding, holder side signal pin ① (shown in Fig. 3) is pushed out to the camera body side, signal pin ② is pushed and film winding stop lever ③ is pushed upward in the arrow direction by pin ③ caulked to ②, so that the film advance lever ④ is not stopped, whereby the film advance crank is rotating continuously. (See Fig. 4)

* When the film advance is started, and when the 15th, 30th exposure is completed, the state before one frame advance is transmitted to the camera body (at the film holder side).

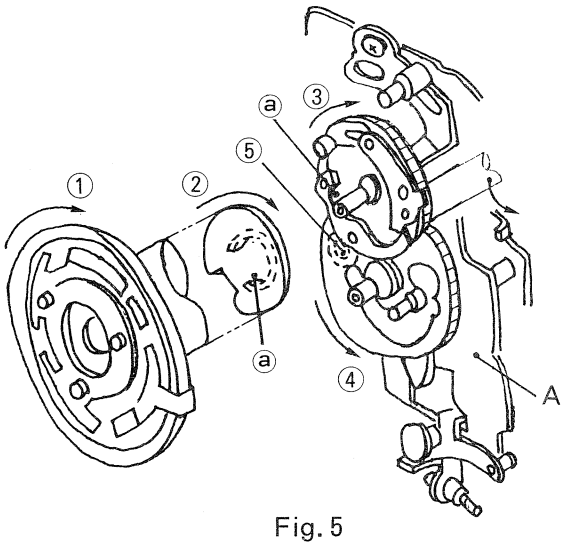

Fig. 5

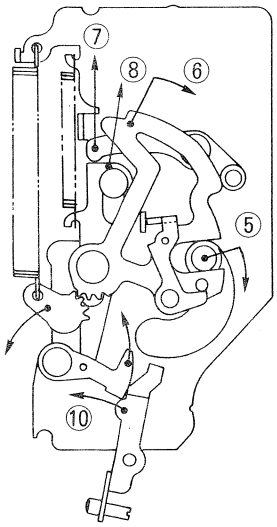

Fig. 6 (Rear A)

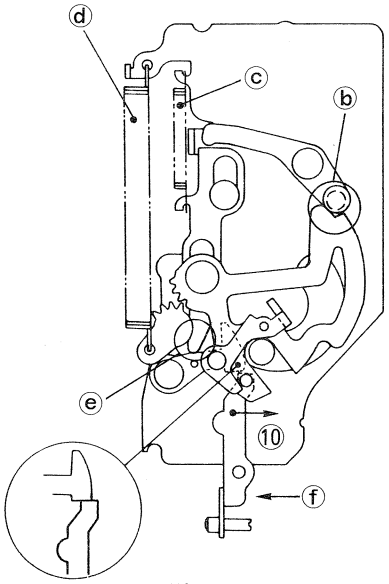

Fig. 7

4 : S2 gear
6 : M charge cam
7 : M release claw
8 : M transmitting lever
9 : M release latch
10 : M release lever

1. Cam part ⓐ is coupled to ③ clutch part ⓐ, rotating ③, ④ and ⑤. (See Fig. 5) Then, pin ⑤ coupled direct to ④ rotates M charge cam ⑥ in the arrow direction (Fig. 6), whereby the tip pushes ⑦ up, and ⑧ operates by means of ⓒ spring action accordingly, then ⑨ is unlocked, and the force of charge spring ⓓ coupled direct to ⑥ is divided into ⓑ and ⓔ (Fig. 7), while M release lever ⑩ receives it for setting.

2. The release is actuated in the arrow direction after M release lever ⑩ and S release lever ⓕ (within the shutter mechanism unit) receive information from the moving coil.

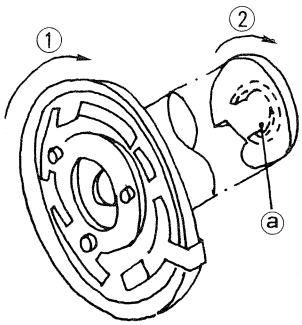

Fig. 8

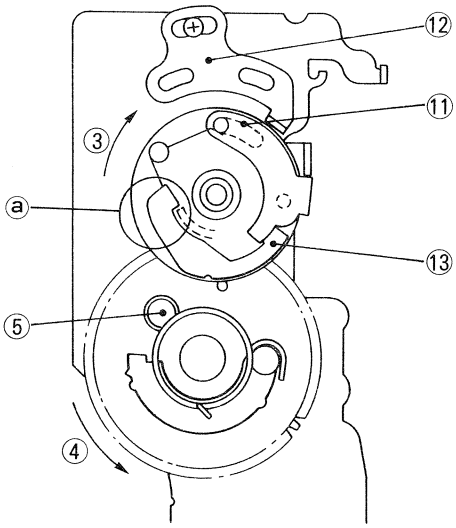

Fig. 9

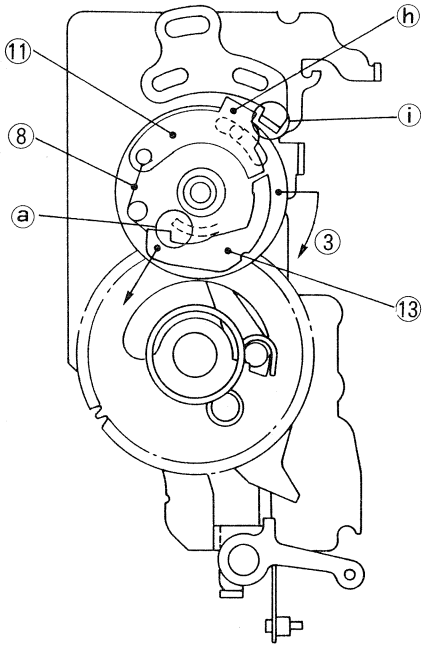

Fig. 10

11 : S clutch lever A

12 : S clutch lever releasing plate

13 : S clutch lever B

3. When clutch ③ (Fig. 9) receives a message from cams ①,② (Fig. 8), rotates in the arrow direction and it is set, part ⓗ (Fig. 10) of S clutch lever Ⓐ,⑪ hits against par ⓘ of S clutch unlocking plate ⑫ and stops, and cam base plate ③ attempts to continue to turn, but ⑬ is disengaged from ⑪, and ② cam coupling part ⓐ is separated from S clutch lever B ⑬, thus stopping the film advance.

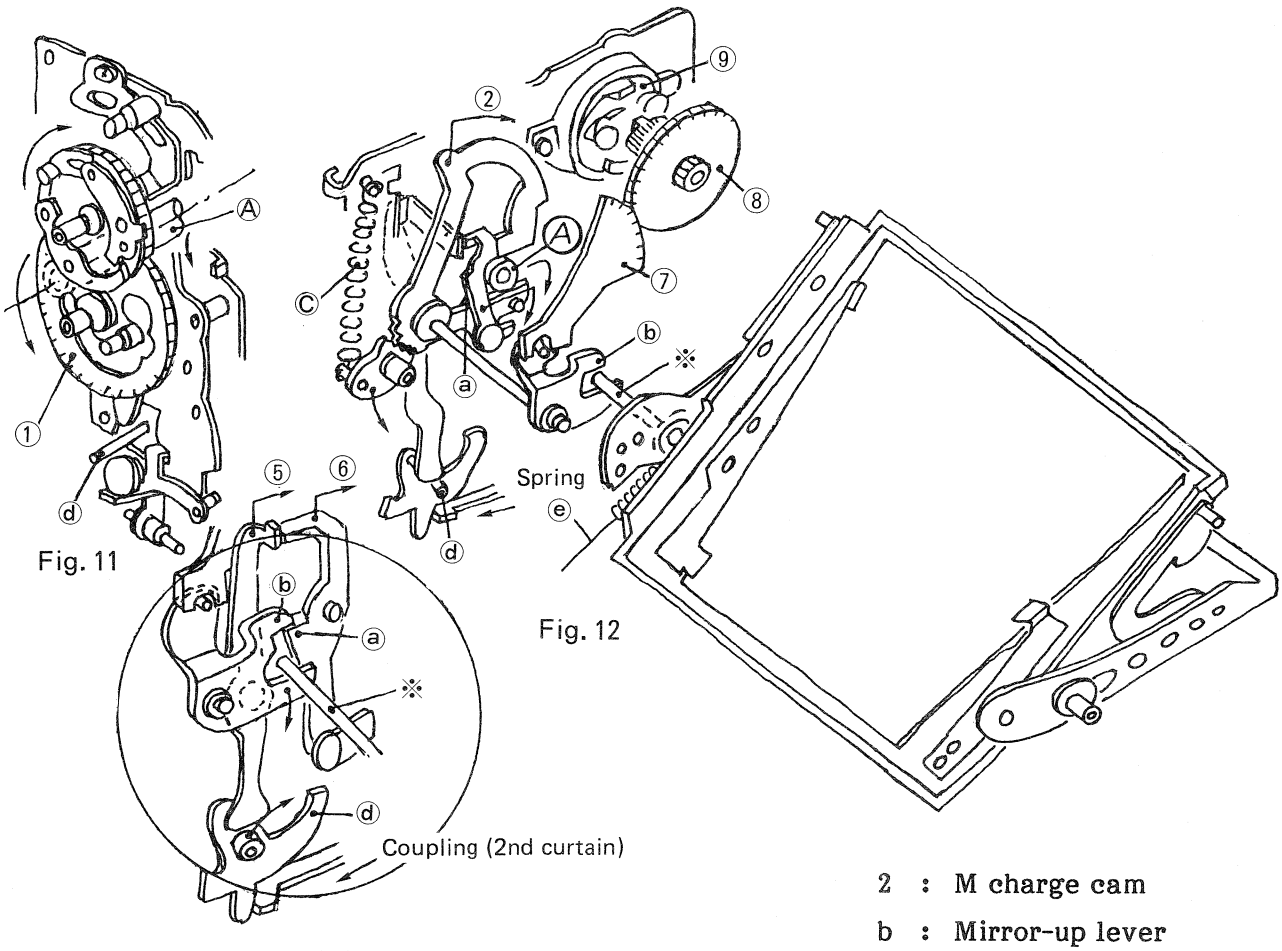

Fig. 11

Fig. 12

Fig. 12-1

2 : M charge cam
b : Mirror-up lever
9 : Governor brake

1. Pin (A) of S2 gear (1) (Fig. 11) actuates M charge cam (2) (Fig. 12), thus rotating a coupled direct to (2) in the same direction, whereby (a) is engaged with (b).

2. (A), (1) and (2) are inverted by (c) spring force according to the release, whereby (a) pushed (b) up, and (8) which is in mesh with (7) coupled with (b) rotates, thus actuating governor brake (9). (Fig. 11 - Fig. 12)

3. When 2nd curtain is closed, lever (d) coupled direct to 2nd curtain is pushed, and (5), (6) move in the arrow direction, setting (b) free, and the mirror starts to lower by means of mirror-down (e) spring force, but (7) and (8) interlocked with (b) rotate, whereby governor brake (9) is actuated. (Fig. 12-1)

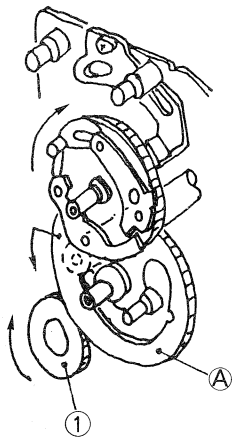

Fig. 13

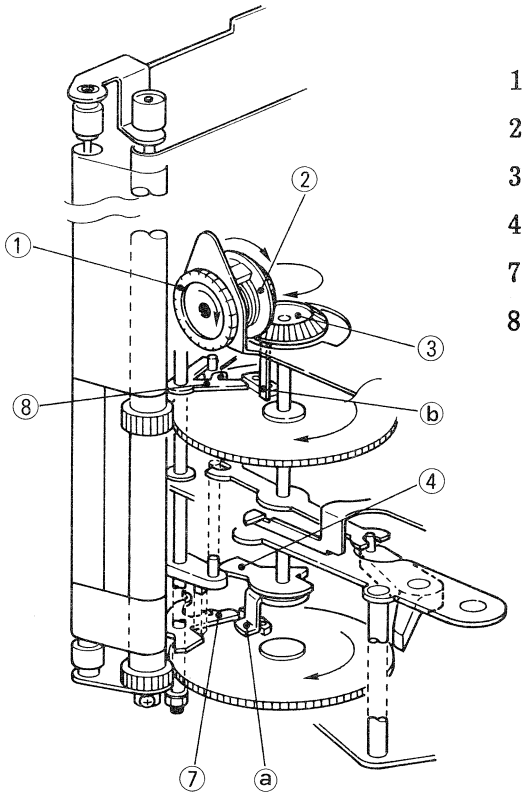

1 : S3 gear
2 : S3 bevel gear
3 : S4 bevel gear
4 : S4 charge claw
7 : 1st curtain stop lever
8 : 2nd curtain stop lever

Fig. 14

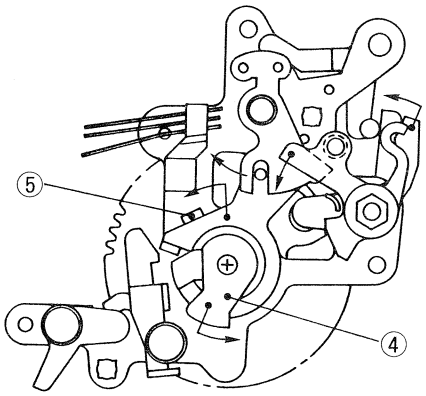

Fig. 15-1

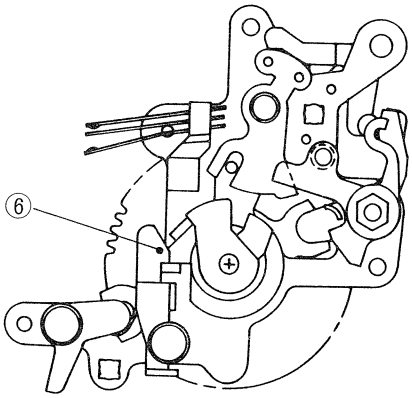

Fig. 15-2

1. ①, ② and ③ (Fig. 14), receiving Ⓐ S2 gear rotation (Fig. 13), rotate in the arrow direction and claw ⓐ (Fig. 14) of ④, ⓐ, ⓑ pushes the claw of 1st curtain charge gear, and ⓑ pushes that of 2nd curtain charge gear, thus rotating, when while winding up the shutter curtain, they are set to stop levers ⑦, ⑧. At the same time, charge claw 4 pushes the hook unit (Fig. 15-1) of 1st curtain start lever ⑤, whereby it is in mesh with 1st curtain claw ⑥ (Fig. 15-2), thus charging each interlocking unit.

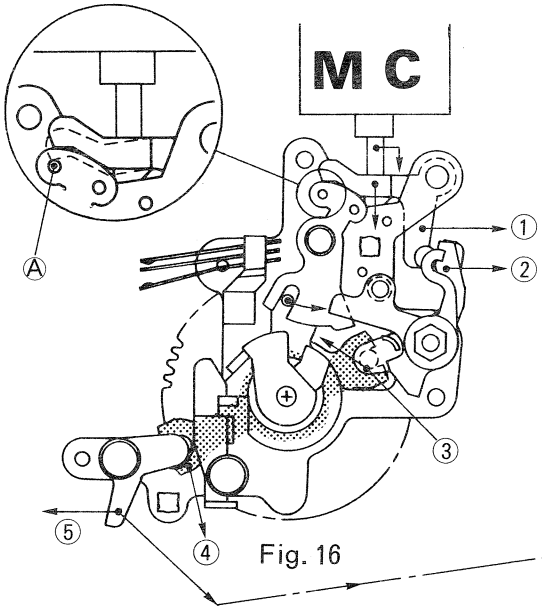

Fig. 16

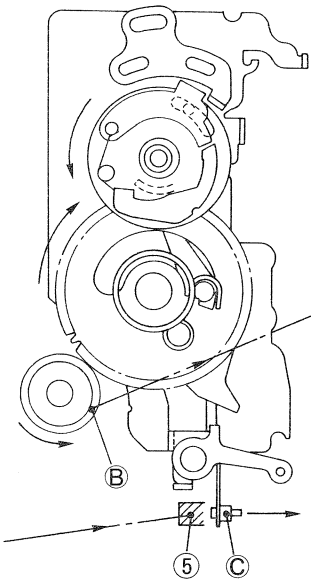

Fig. 17

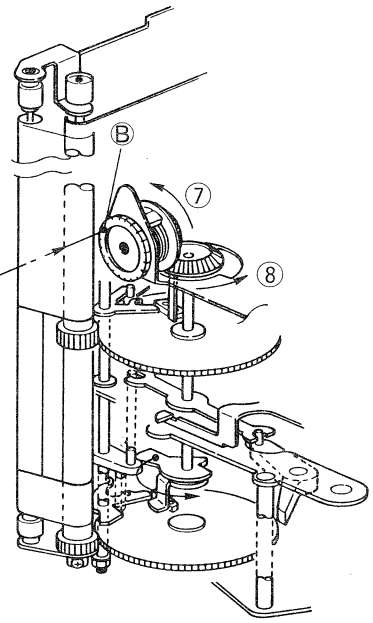

Fig. 18

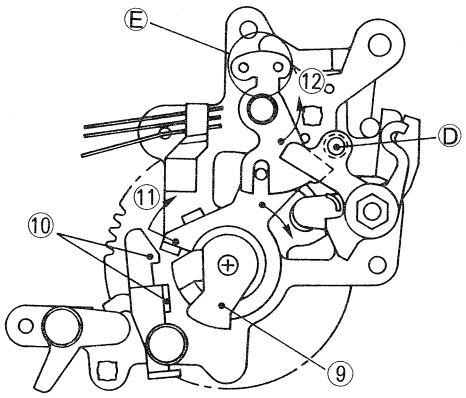

Fig. 19

2. RELEASE

When MC, receiving a release signal in charged conditions shown in Fig. 16, is actuated, each transmitting lever moves in the arrow direction of ①②③④, and S release ⑤ pushes M release ⓒ (Fig. 17), thus unlocking mechanical charge. (Since MC pin controls lever ①, using stop pin Ⓐ (Fig. 16), MC force is actuated in a half-reduced position, thus moving only levers ②③④⑤.)

M charge cam thus unlocked actuates the mirror-up lever. On the other hand, gear Ⓑ coupled with gear S2 transmits the rotation in the arrow direction of ⑦⑧ (Fig. 17 - Fig. 18), and charge lever ⑨ (Fig. 19) coaxial to ⑧ disconnects hook ⑩ after the mirror goes to the specified uppermost position. At the same time, the interlocking units ⑪ ⑫ move in the arrow direction, and when ⑫ disengages 1st curtain stop lever claw Ⓓ, 1st curtain runs, while the 1st curtain shutter charge gear is rotating. (Stop pin Ⓔ in Fig. 19 is unlocked, so that lever ① is set free.)

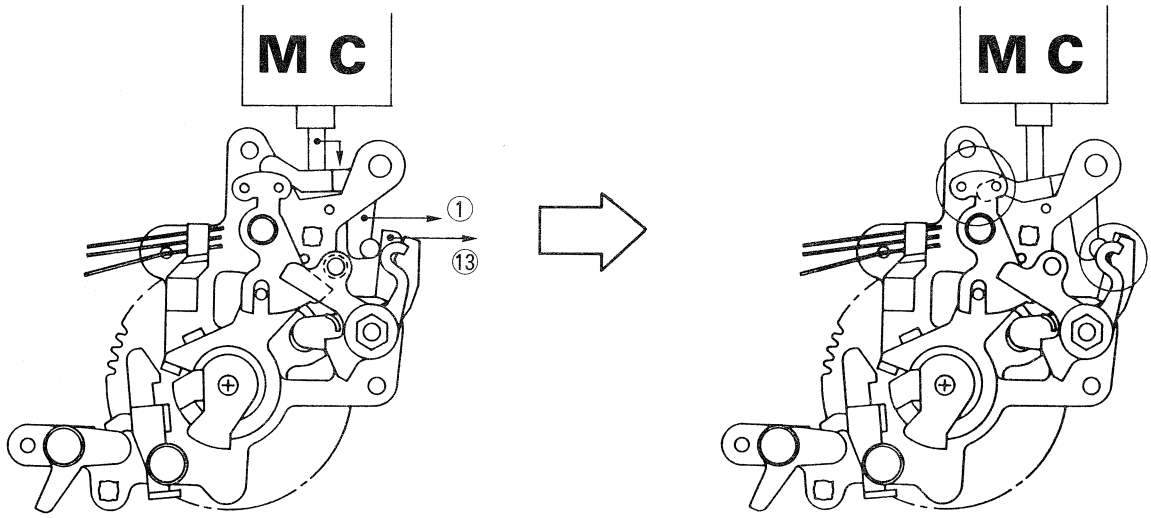

Fig. 20

3. When 1st curtain runs, MC, receiving a release signal, is actuated again, and when lever ① (Fig. 20) is pushed, 2nd curtain stop claw ⑬ is disengaged directly, and 2nd curtain runs, while 2nd curtain shutter charge gear is rotating.

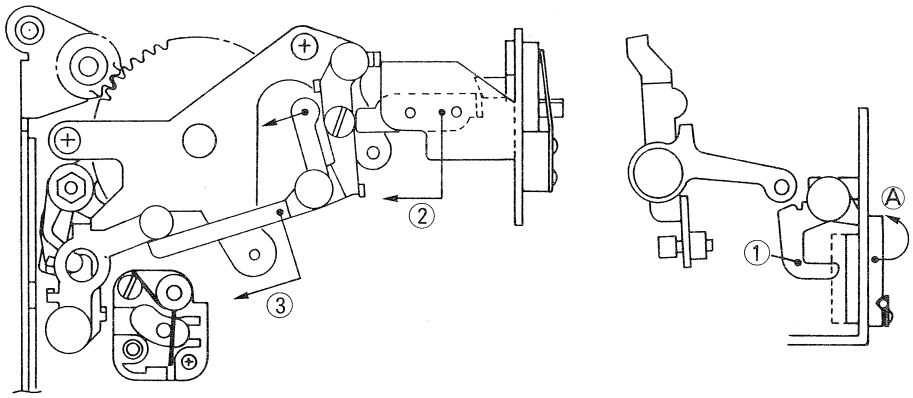

1 : MR lever

2 : MR selector plate

3 : Mechanical S lever

Fig. 21

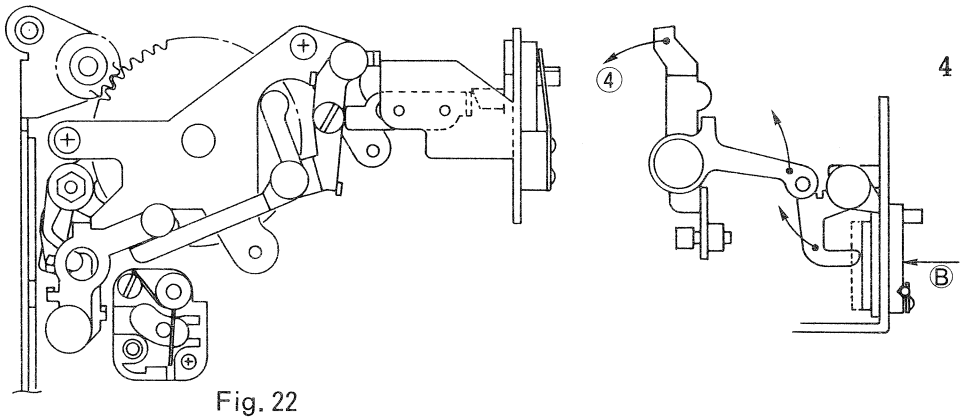

4 : M release latch

Fig. 22

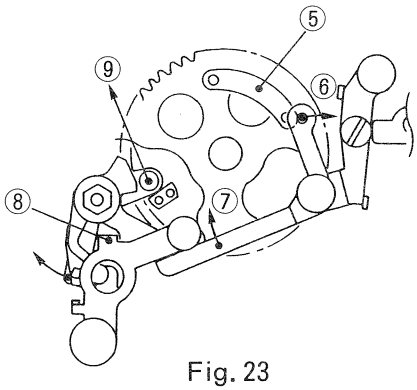

5 : Cam

6 : Mechanical MC lever

9 : 2nd curtain latch

Fig. 23

1. When shutter release selector (A) is set to the mechanical release position, the lever is actuated in the arrow direction of 1 (2) and (3), and set (Fig. 21 - Fig. 22). Then, a push on shutter release button B (Fig. 22) unlocks M release latch (4) directly, and each mechanism is actuated. When 1st curtain shutter charge gear rotates, while running 1st curtain, cam (5) (Fig. 23) caulked to 1st curtain shutter charge gear pushes (6), thus actuating (7) (8) and (9), then 2nd curtain latch (9) is disengaged and 2nd curtain shutter charge gear starts to rotate, thereby operating 2nd curtain. (Approx. 1/60 second shutter speed is set according to the shutter curtain speed and the time between the start of rotation of 1st curtain shutter charge gear and a push of cam (5) on (6).)

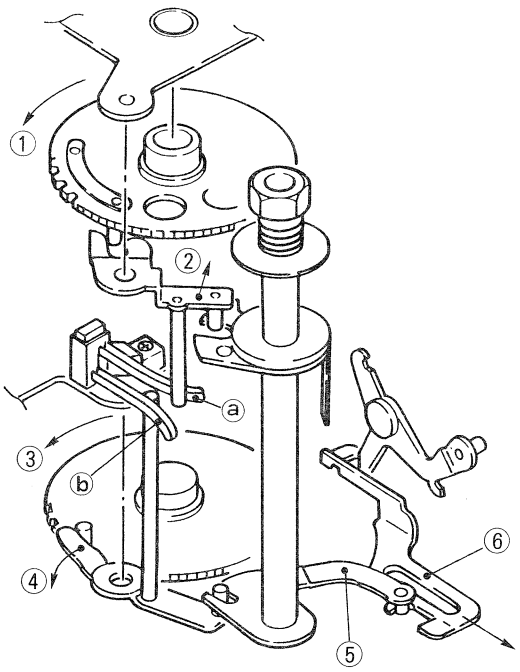

Fig. 24

1 : 1st curtain charge gear
2 : 1st curtain brake lever
3 : 2nd curtain charge gear
4 : S-signal lever
5 : Wind-up unlocking lever

a : Synchro contact piece (upper) (1st curtain)
b : Synchro contact pipe (lower) (2nd curtain)

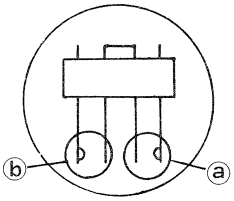

(Synchro contact piece)

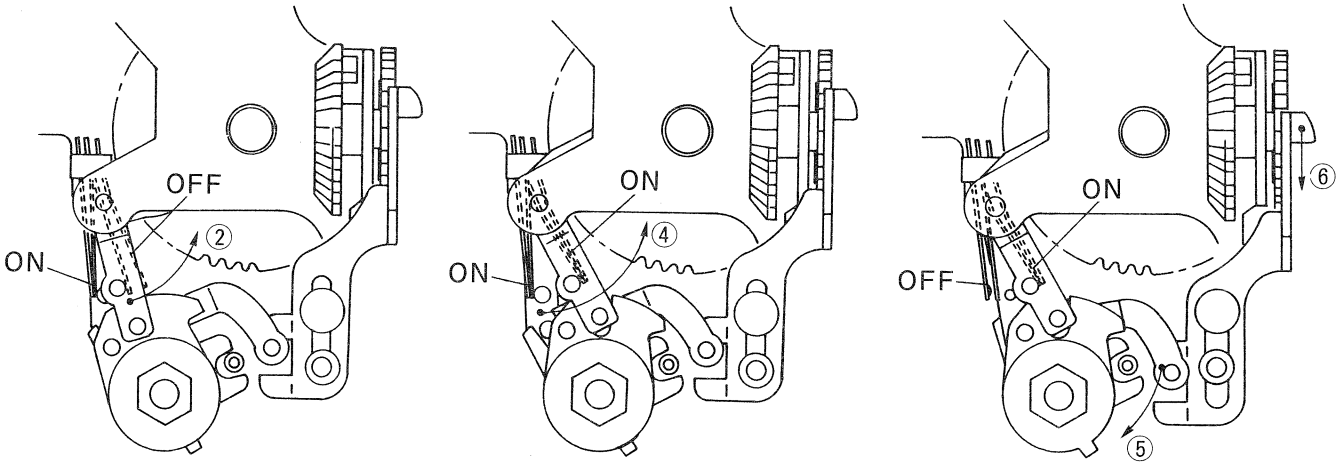

A B C

Fig. 25

1. Fig. 25-A shows the synchro contact piece conditions at shutter charge, B at fully open 1st curtain and C at 1st/2nd curtain release respectively. (Operation is performed in the order of (2) (4) (5) and (6).)

2. When the shutter is released to full open, with (1) rotating as Fig. 24, 1st curtain running, synchro contact piece (a) is ON, and the flash ignites. Then, (3) rotates, and when 2nd curtain is closed, (b) is OFF. While these synchro contact pieces are ON, then OFF, the flash tuning time is preset.

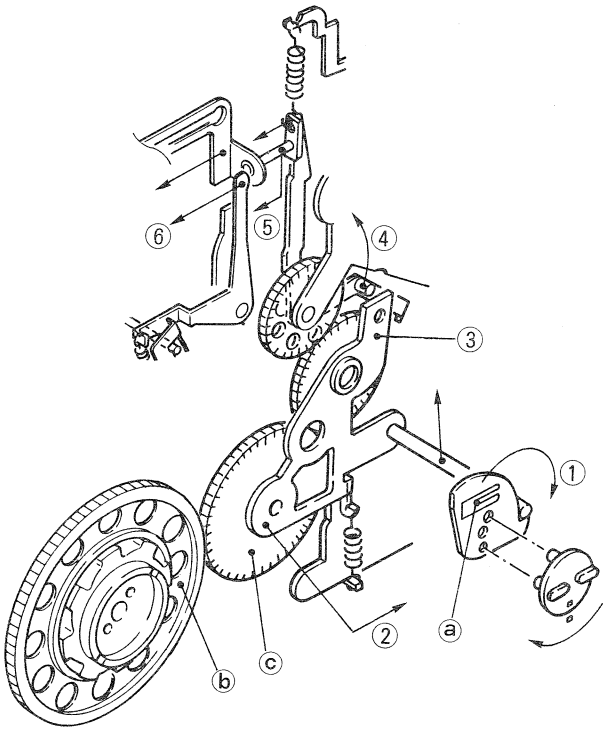

Fig. 26

When S-multi button is turned to "MULTI" position, (1) to (6) are actuated in the arrow direction in sequence as illustrated, part (a) is set to a click point and the holder side gear (b) is disengaged with the camera body side gear (c).

On the other hand, the tip of (3) pushes pin (4), setting signal pin (5) for the holder always in the winding complete position (film holder side), thereby retreating it from the camera body side, and the camera body side is placed in one-turn winding conditions.

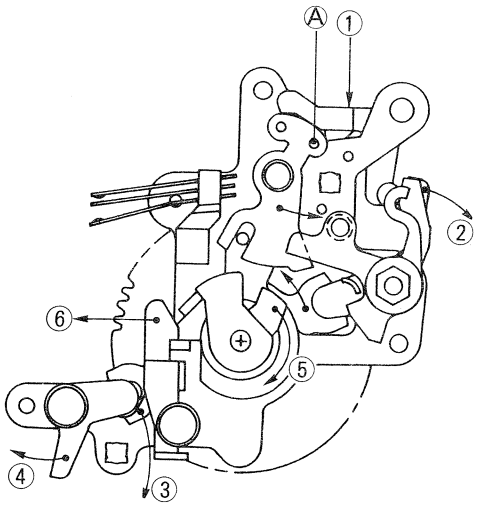

Fig. 27

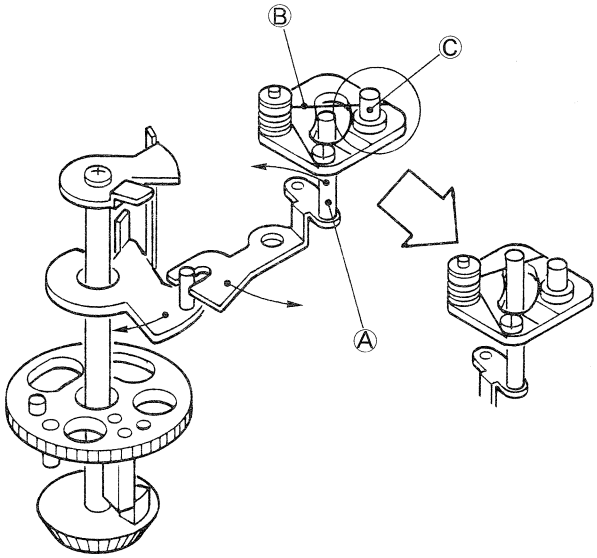

Fig. 28

1. Drawing of shutter mechanism after cocking is shown in Fig. 27. When shutter release button is released, each lever operates in direction of the arrow, in numerical order as shown in Fig. 27. ⑥ charge latch is unlated and 1st curtain runs. Simultaneously Ⓐ pin (Fig. 28) pushes Ⓑ contact, thereby the contact is released from Ⓒ pin. At that time a start signal for counting shutter time value goes to IC1 of F.P.C. board.

2. The time which will be required for Ⓑ is disengaged from Ⓒ is applied as a reference time. Total calculation for the signal of closing 2nd curtain will be done in IC1 within the reference time. Second operation of MC will be made by the signal to close 2nd curtain.

2-2 DIS/REASSEMBLY AND REPLACEMENT

1	DISASSEMBLING OF SIDE BOARDS/BOTTOM COVER	1/2	21

For other disassembly and reassembly than described here, refer to the exploaded views of parts catalog as a rule.

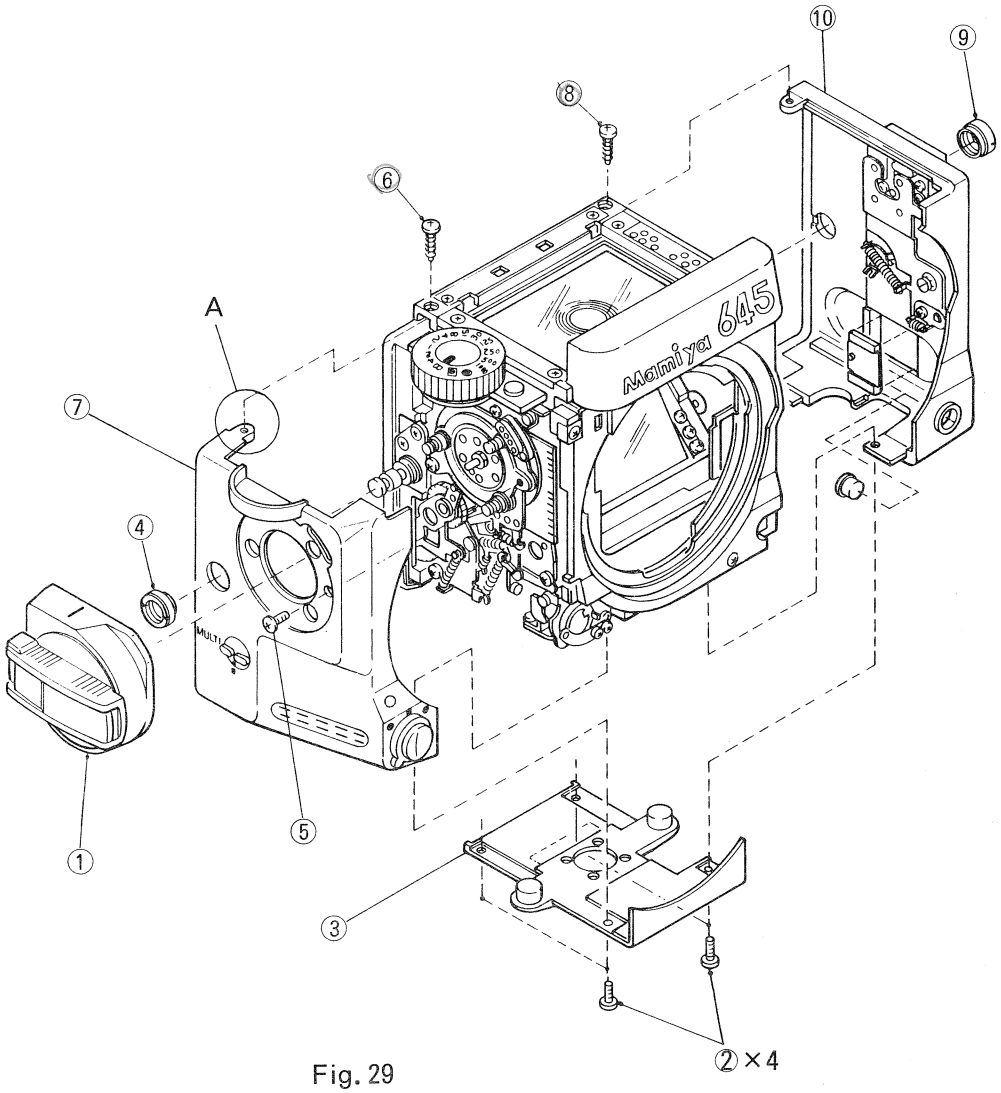

Fig. 29

A. DISASSEMBLY

For disassembly, follow numerals in circle below.

1. When removing neck strap lug nuts (4), (9), always use SLA-neck strap lug nut driver (Tool No. SLA01). (Fig. 29)
2. When removing the left side board, set the shutter release selector lever to "LOCK" position (Red index). (Fig. 30)
3. However, when removing the right/left side board and bottom cover, the respective units can be removed.

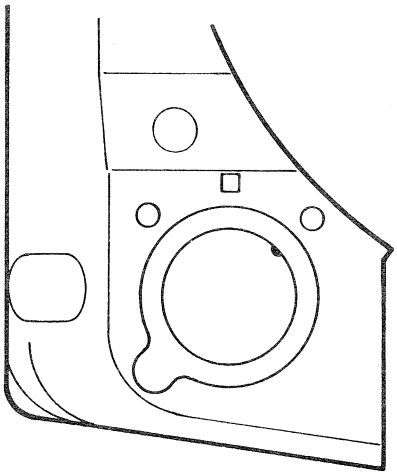

Fig. 30

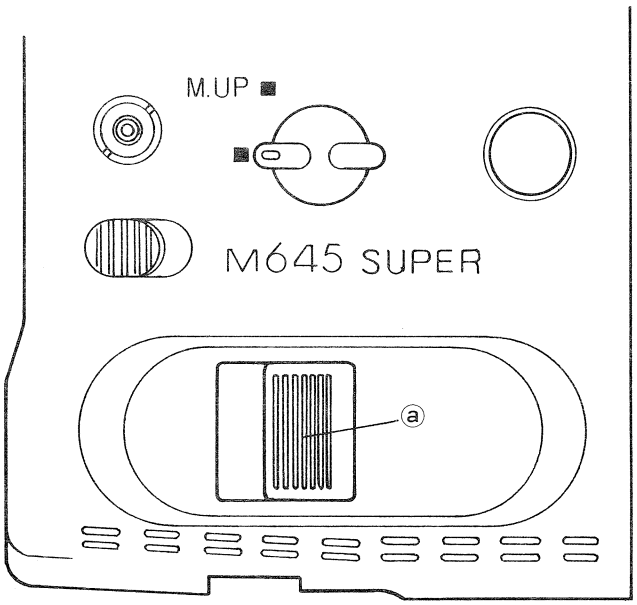

Fig. 31

B. REASSEMBLY

For reassembly, reverse the disassembly procedure described above as a rule.

1. When reassembling the right-side board, as shown in Fig. 31, set RC cover *P/N: 6200-11941) (a) aside to the right. Set the mirror-up lever in the horizontal (normal) position.

Note: Take care not to pinch a part of FPC board when assembling.

2 DIS/REASSEMBLY OF WINDING BASE PLATE ASS'Y

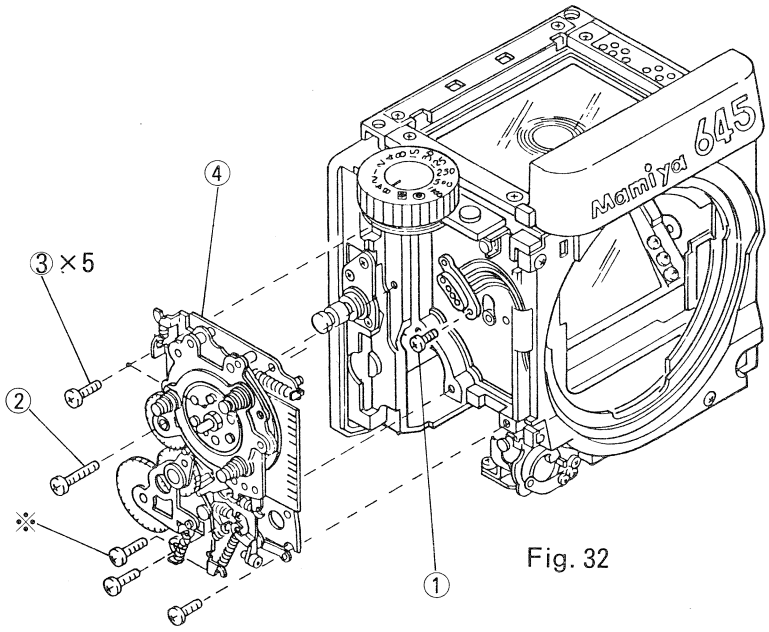

Fig. 32

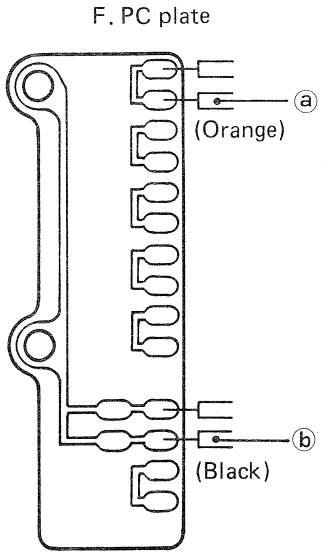

Fig. 33

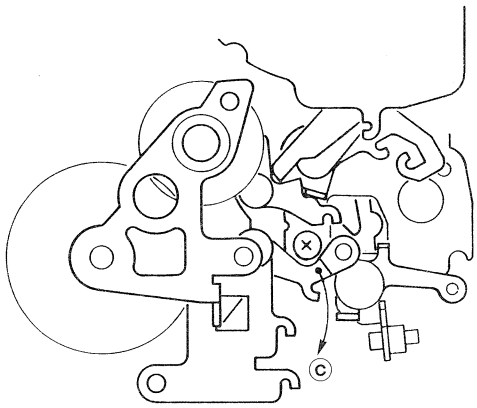

Fig. 34

A. DISASSEMBLY

1. Remove orange and black lead wires ⓐ and ⓑ (Fig. 33) to F PC place (Parts No. 6200-15611).

2. Disassemble the assembly unit in the numerical order above. (Fig. 32)

   Note: When unscrewing asterisked (*) screw, it is recommended to give the film advance crank a 1/4 turn and disengaged mirror unlocking lever ⓒ. (Fig. 34)

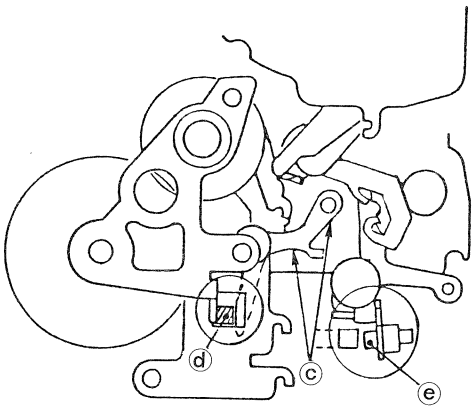

Fig. 35

B. REASSEMBLY

For reassembly, reverse the disassembly procedure above. However, push up mirror unlocking lever ⓒ and set release lever ⓔ to the right side of lever ⓓ as illustrated above. (Fig. 35)

3	DIS/REASSEMBLY OF MIRROR HOUSING	1/1	24

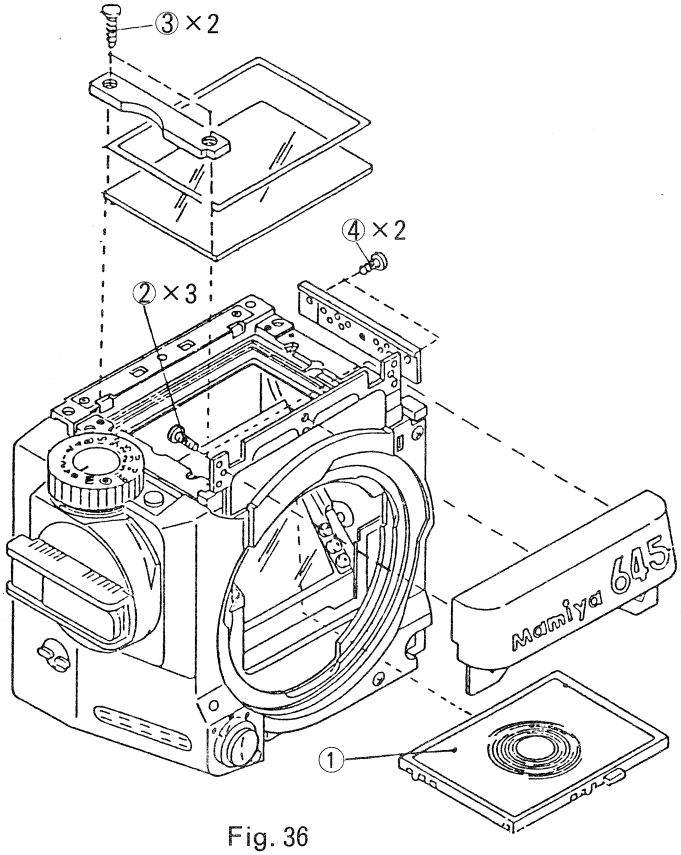

Fig. 36

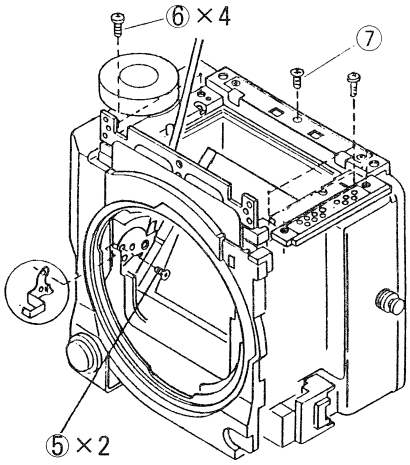

Fig. 37

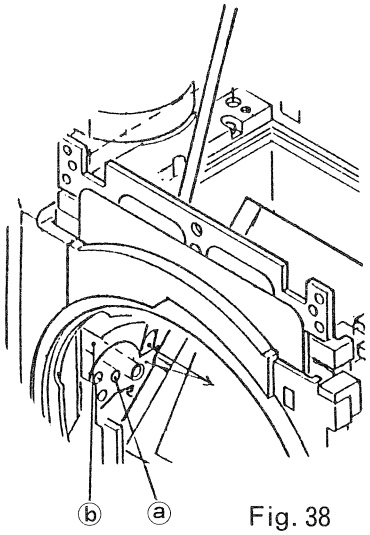

Fig. 38

A. DISASSEMBLY

1. Remove the right-side plate. Refer to Fig. 29.

2. Disassemble this unit in the numerical order illustrated above. (Fig. 36 - 38)

3. Insert a screwdriver (-) between the mirror arm and mirror housing (Fig. 38), and push the mirror arm in the arrow direction to remove the arm from pin ⓐ, then at the same time, remove arm pin ⓑ from the winder unit and mirror-up lever, and while pushing it toward the mirror side, pull up the mirror housing.

B. REASSEMBLY

For reassembly, reverse the disassembly procedure described above.

4 REMOVAL AND RE-INSTALLATION OF FPC PLATE

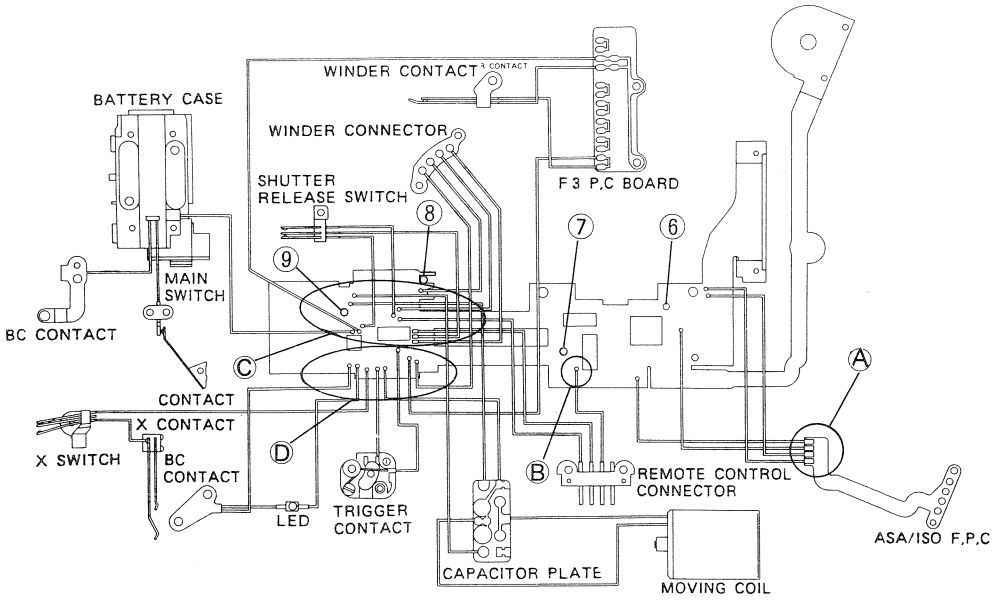

Fig. 39

A. REMOVAL

1. Remove (1) to (4) in the numerical order illustrated above, and get the mirror housing as well ready for removal. (Fig. 40)
2. Remove solder of each lead wire from FPC plate.

   Total 25 lead wires (Fig. 39)

   4 from part (A)
   1 from part (B)
   12 from part (C)
   8 from part (D)
3. Then, remove (5) to (9) and keep the mirror housing afloat, then separate black tape at part (E) and double-face-coated tape at part (F) to take out FPC plate. (Fig. 40)

B. INSTALLATION

1. For FPC plate installation, reverse the removal procedure above.

   Note: Bend a flexible part at part (F) toward the lens side. (Fig. 40)

   Referring to the wiring diagram, solder 25 lead wires.

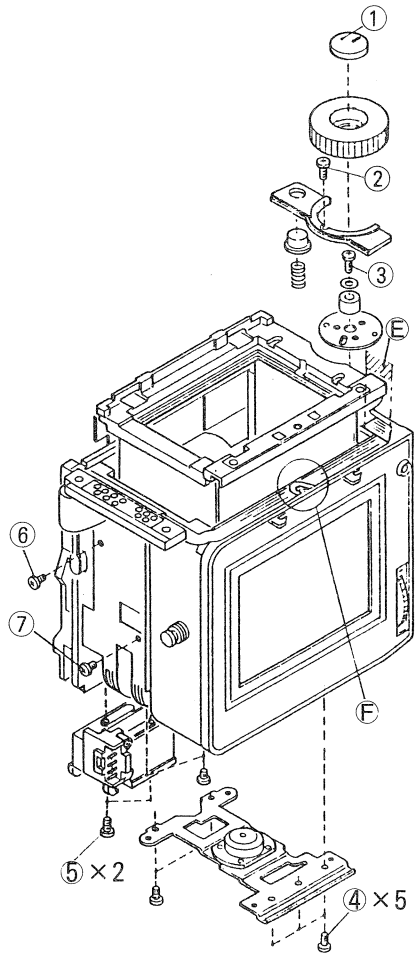

Fig. 40

5	REMOVAL AND RE-INSTALLATION OF SHUTTER ASS'Y	1/1	26

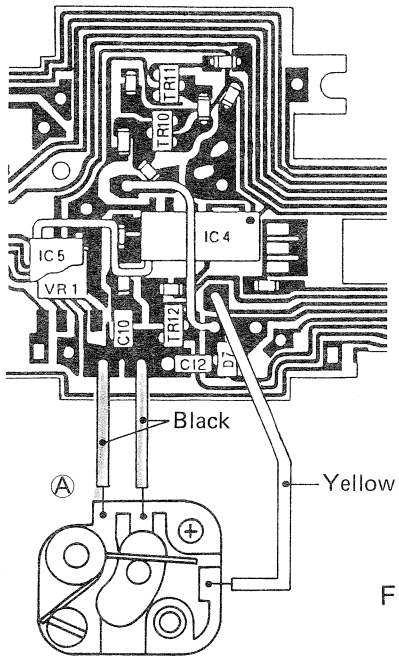

Trigger contact

Fig. 42

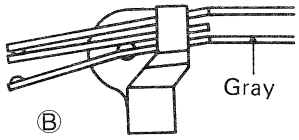

X switch

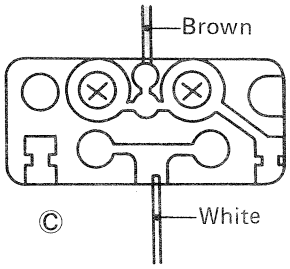

Capaciter plate

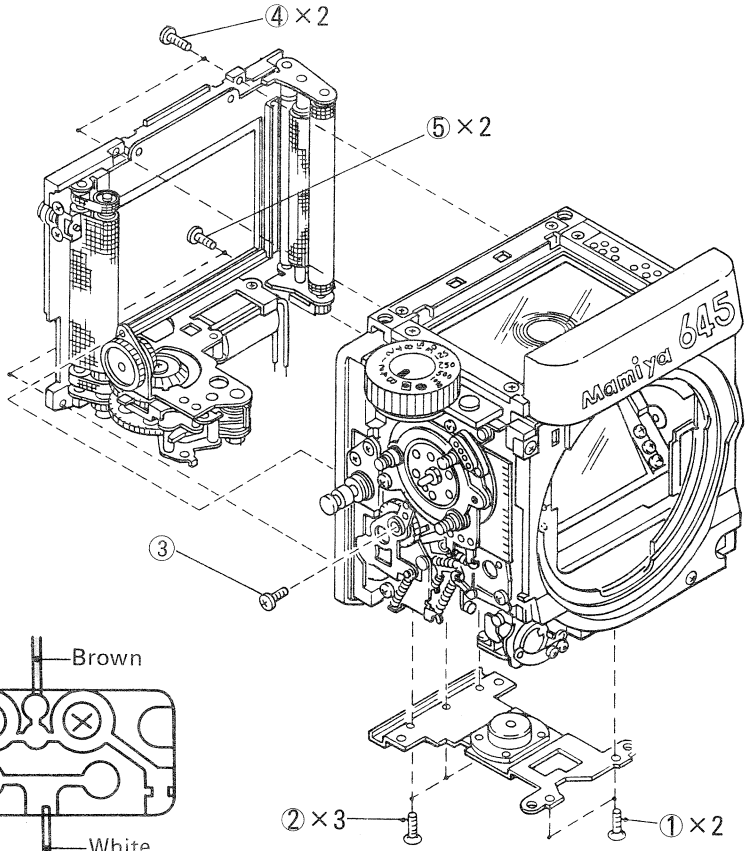

Fig. 41

A. REMOVAL

1. Remove the right/left side plates and bottom cover.

2. Disassemble this unit in the numerical order illustrated above. (Fig. 41)

3. Ⓐ Unsolder two black and yellow lead wires from FPC plate (Fig. 42)
   Ⓑ Unsolder gray lead wire from X switch contact.
   Ⓒ Unsolder brown/white lead wires from the moving coil.

B. RE-INSTALLATION

1. For re-installation, reverse the disassembly procedure described above.

Note: Take care so that brown and gray lead wires from MC (moving coil) are not pinched in the frame of camera body.

6 REMOVAL AND RE-INSTALLATION OF SR BASE PLATE

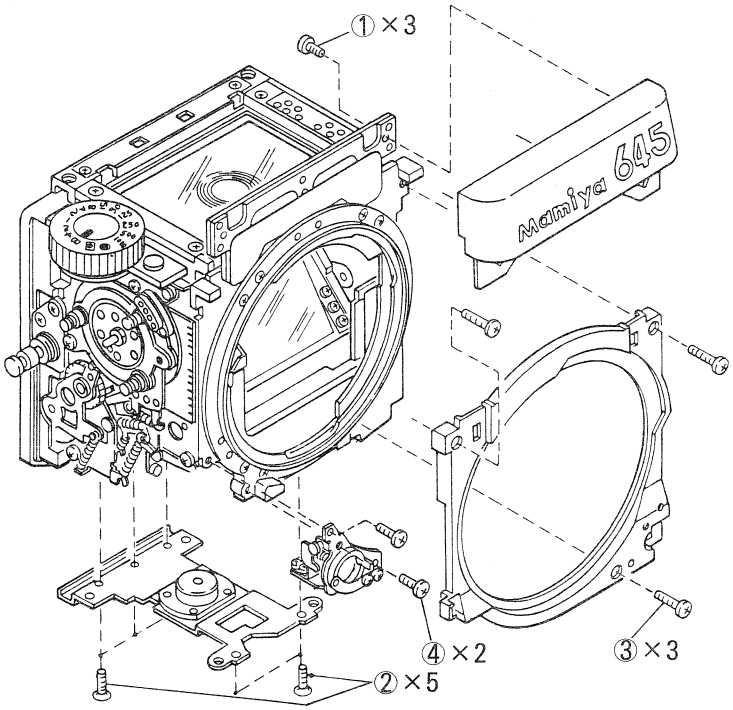

Fig. 43

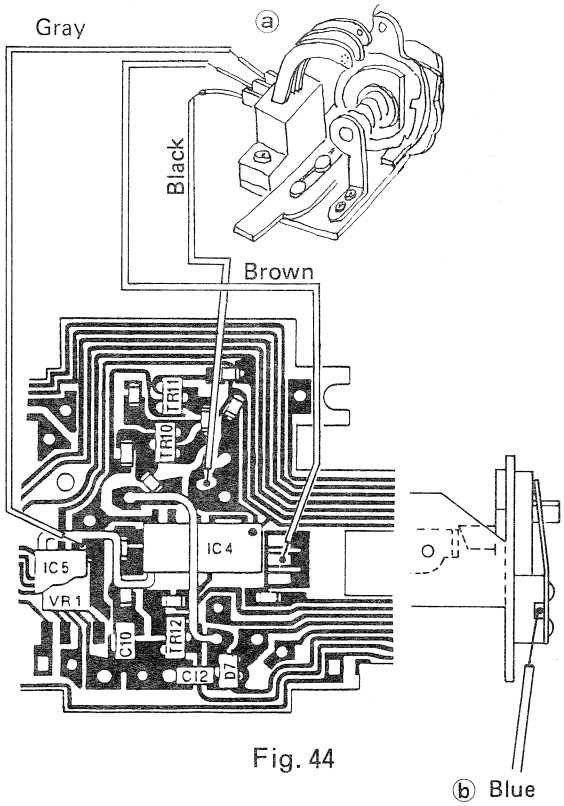

Fig. 44

A. REMOVAL

1. Remove the right/left side plates and bottom cover.

2. Remove ① to ③ in the numerical order as illustrated above (Fig. 43).

3. Detach solder of each lead wire of SR base plate.
   ⓐ: Disconnect 3 lead wires (black, brown and gray 1 ea.) from FPC plate (Fig. 44)
   ⓑ: Disconnect one blue lead wire from SR base plate (Fig. 44)

4. Then, remove ④ and take out SR base plate.

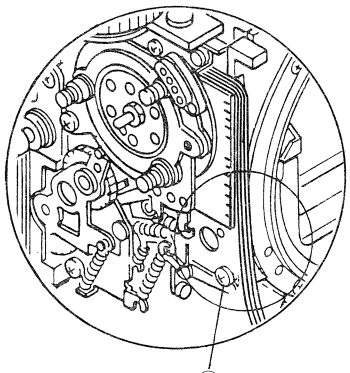

Fig. 45

B. RE-INSTALLATION

1. For re-installation, reverse the removal procedure described above.
   Note: When mounting the front cover, take care so that a lead wire from W. connector ⓒ (Fig. 45) is not pinched in the bayonet ring.

7	DIS/REASSEMBLY OF WINDING BASE PLATE	1/2	28

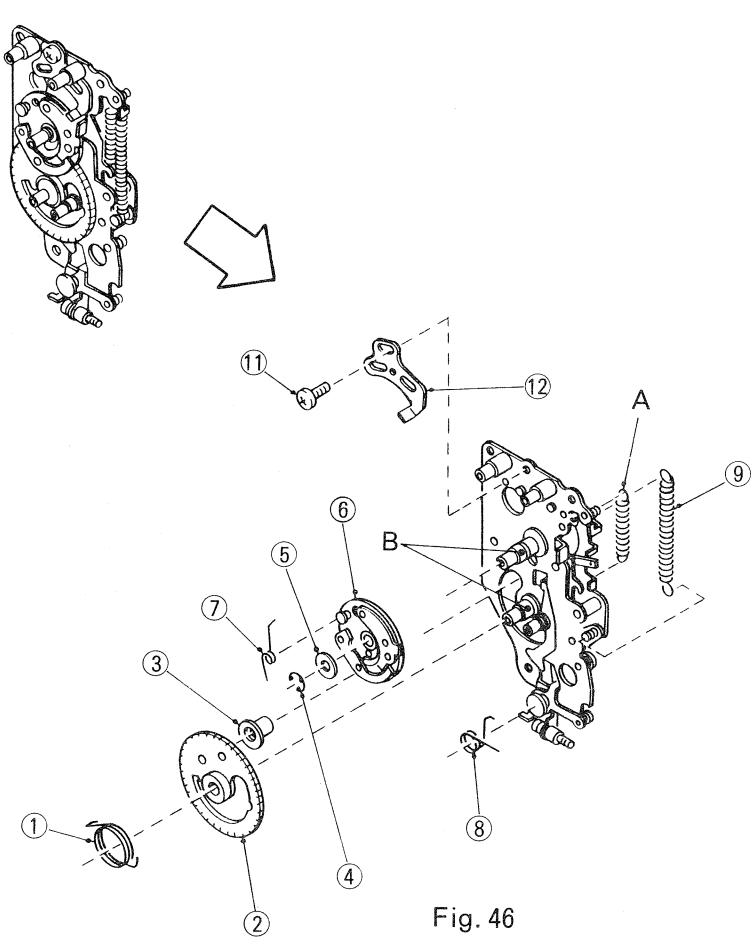

Fig. 46

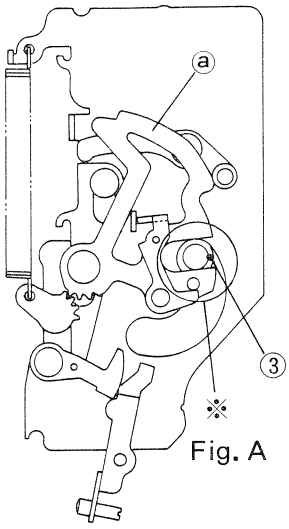

Fig. A

Fig. 47

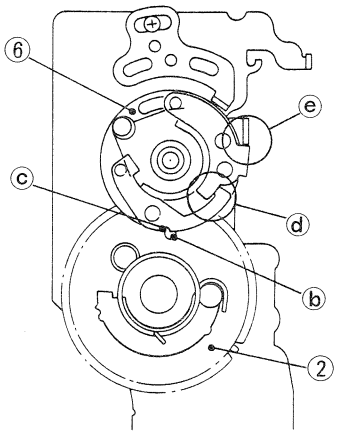

Fig. 48

A. DISASSEMBLY

1. Disassemble the winding base plate in the numerical order as illustrated. (Fig. 46)

B. REASSEMBLY

1. For reassembly, reverse the disassembly procedure above.

2. Install S2 gear (2) so that the charge pin (3) of S2 gear (2) (Fig. 47) fits M charge cam (a) (Fig. 47) (in Fig. A), and align hole mark (b) (Fig. 48) with notch c mark, and at the same time, engage S2 gears (2) (3) with the clutch gears in the position where each lever at parts (a) (d) contacts each other for reassembly.

Note: Apply Moebius grease (#No. 8300) to the pillar (B) (Fig. 46).

7 DIS/REASSEMBLY OF WINDING BASE PLATE

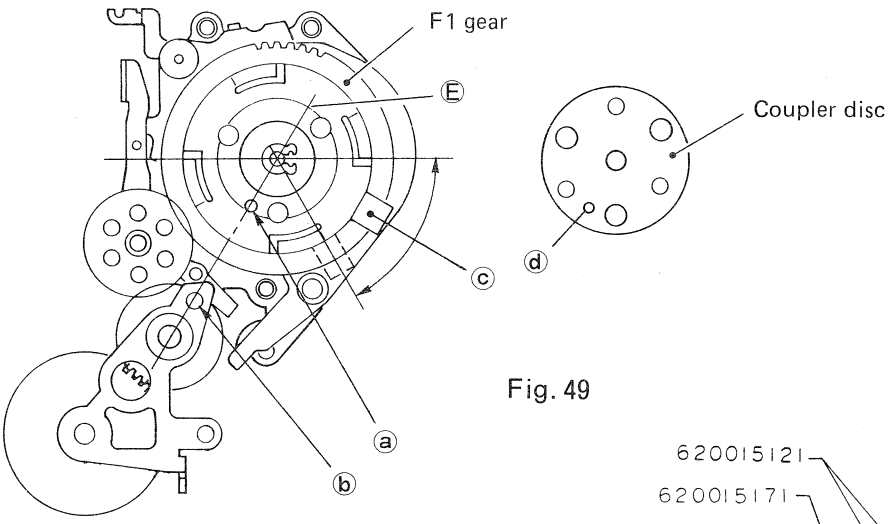

Fig. 49

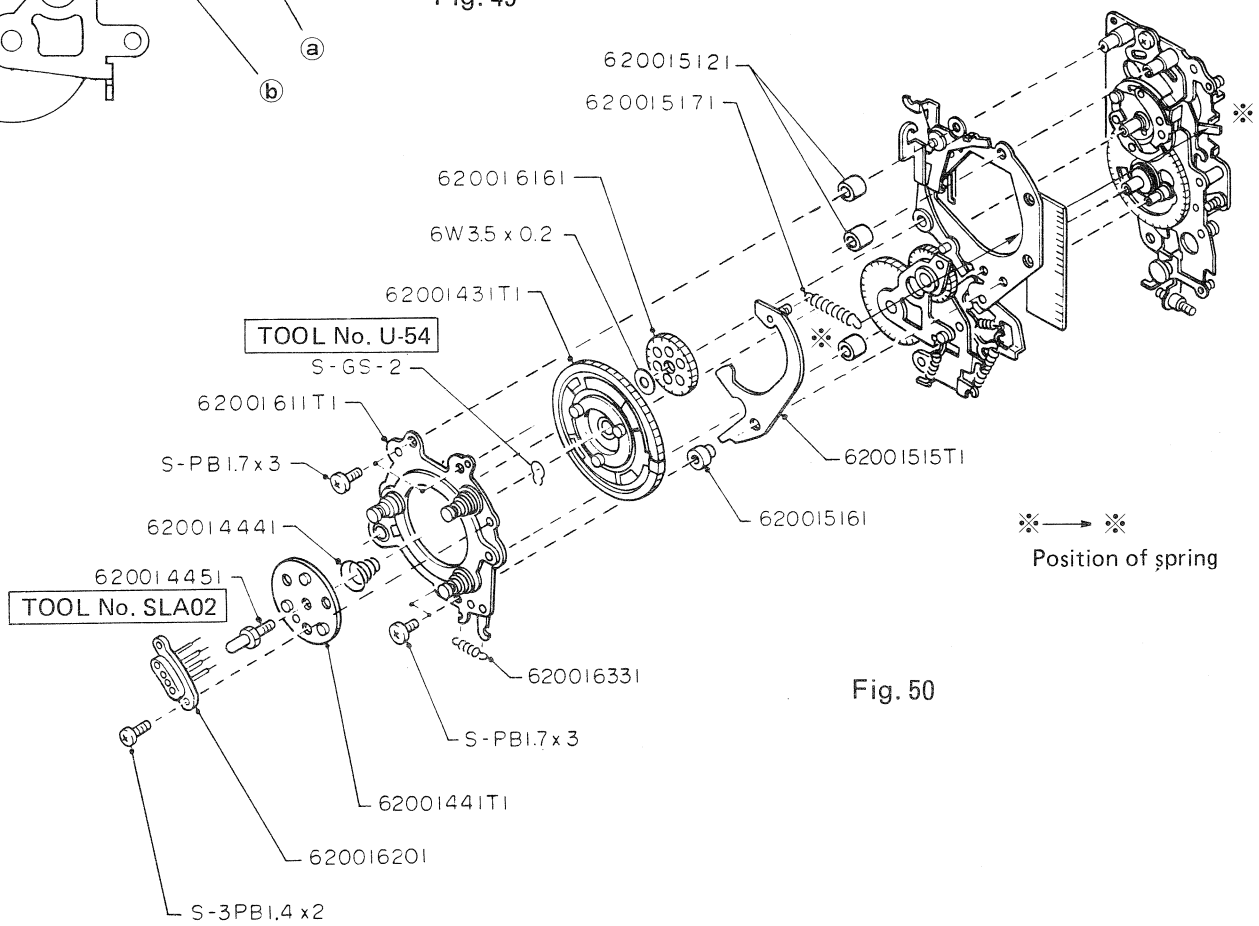

Fig. 50

3. 1) When installing F1 gear, engage the F1 gear as the ⓐ hole is aligned with ⓑ on the line Ⓔ. (Fig. 49)
   2) Set the ⓒ plate in allowable range with arrow mark. (Fig. 49)
   3) Install S-GS-2 ring with U-54 spanner.
   4) Install coupler disc as the hole ⓓ of coupler disc coincide with hole a of F1 gear.
   5) Set the guide pin by SLA-02.

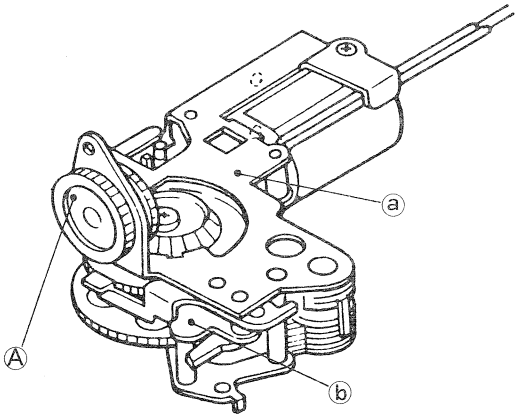

Fig. 51

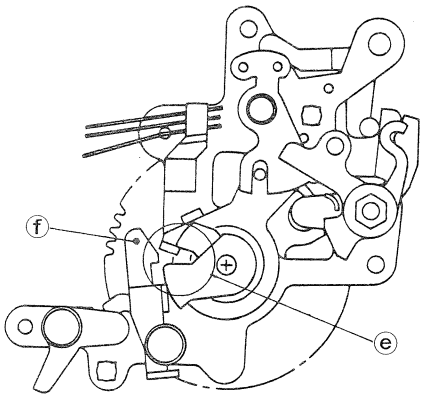

Fig. 52

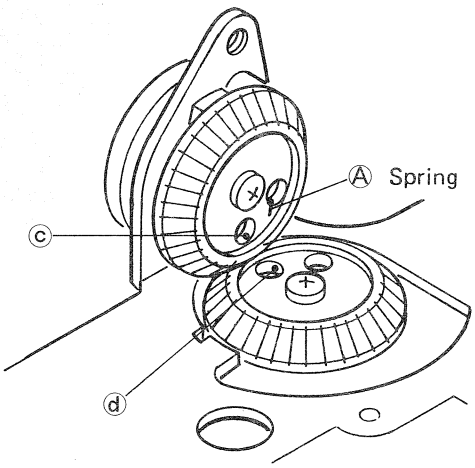

Fig. 53

The shutter mechanism assembly (S3 base plate ass'y: P/No. 620018001) is to be exchanged in unit. Therefore, spare parts will be supplied as one assembly unit: no disassembly procedure is shown here.

Note: If disassembly is unavoidable:

With charge claw (e) (Fig. 52) and 1st curtain start claw (f) released, align part (c) (Fig. 53) of bevel gear of base plate (a) (Fig. 51) with part (d) (Fig. 53) of bevel gear of base plate (b) (Fig. 51) to engage gears with each other before reassembly.

9 REASSEMBLING SHUTTER CURTAIN UNIT

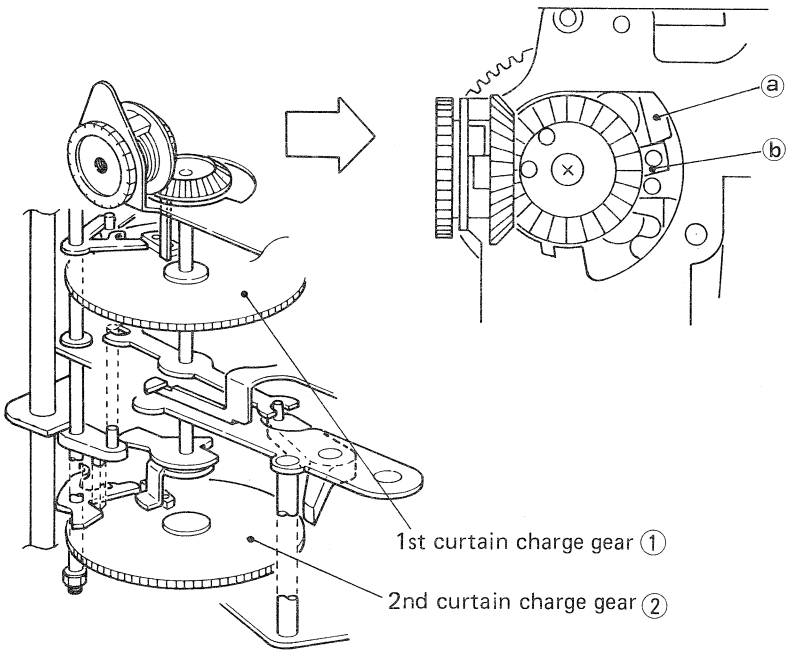

Fig. 54

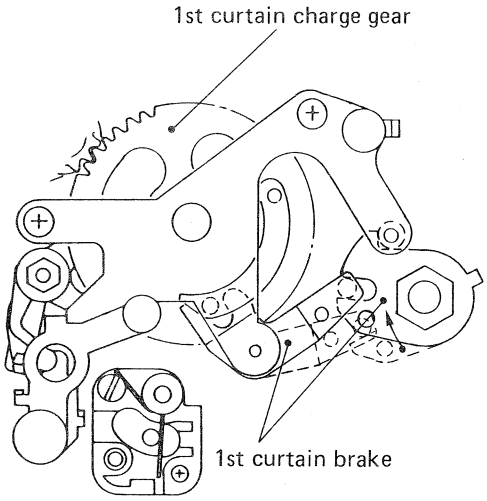

Fig. 55

Before installing the shutter curtain unit, give 1st spring drum shaft of shutter curtain speed adjusting gear four turns and 2nd curtain spring drum shaft two turns to eliminate shutter curtain looseness.

1. Turn ① 2nd curtain charge gear (Fig. 54) of shutter mechanism unit clockwise by the finger and hook stopper pin ⓐ on 2nd curtain charge start claw ⓑ to select set conditions. Then, hook 1st curtain charge gear ② on 1st curtain brake (Fig. 54) to select release conditions.

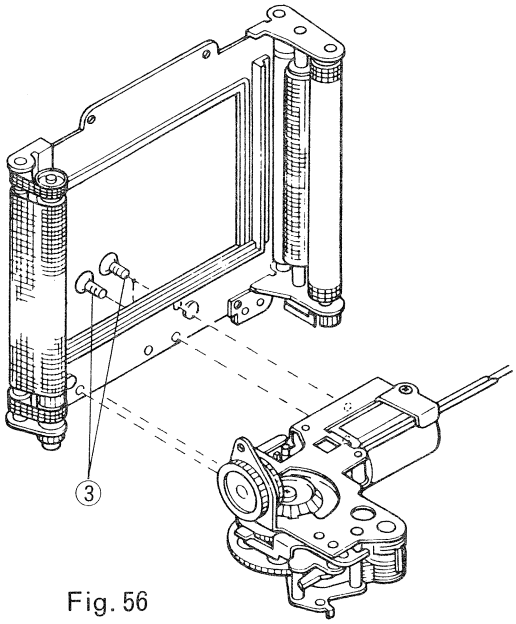

Fig. 56

2. Temporarily secure the shutter mechanism unit set to shutter curtain unit in para. ① above, using two screws ③ (Fig. 56)

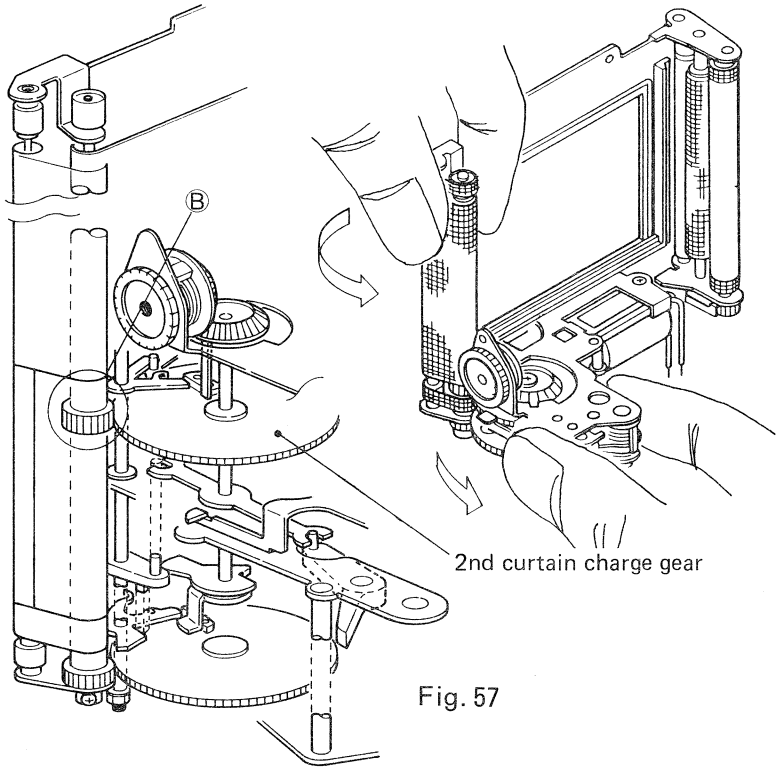

Fig. 57

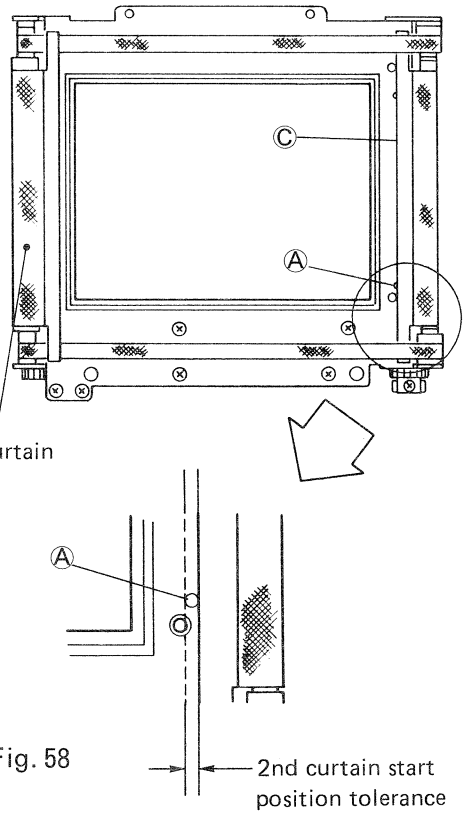

Fig. 58

A. POSITIONING 2ND CURTAIN START

1. Move the entire shutter mechanism unit in the arrow direction, while holding 2nd curtain charge gear (Fig. 57) by the right thumb so that the set does not come off, and disengage (B) then wind up 2nd curtain (Fig. 57) using the left hand.

2. Further, after winding, engage the shutter curtain gear (B) with 2nd curtain charge gear so that 2nd curtain metal tip (C) is located at the right end of concave mark (A) (Fig. 58) or within the allowable range.

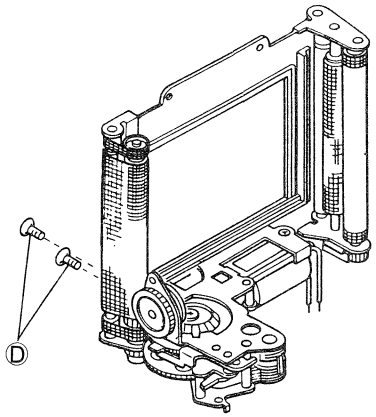

Fig. 59

3. Tighten the temporarily fixed screw and the two remaining screws (D). (Fig. 59)

   Note: When winding up 1st and 2nd curtains, take care not to damage both curtains.

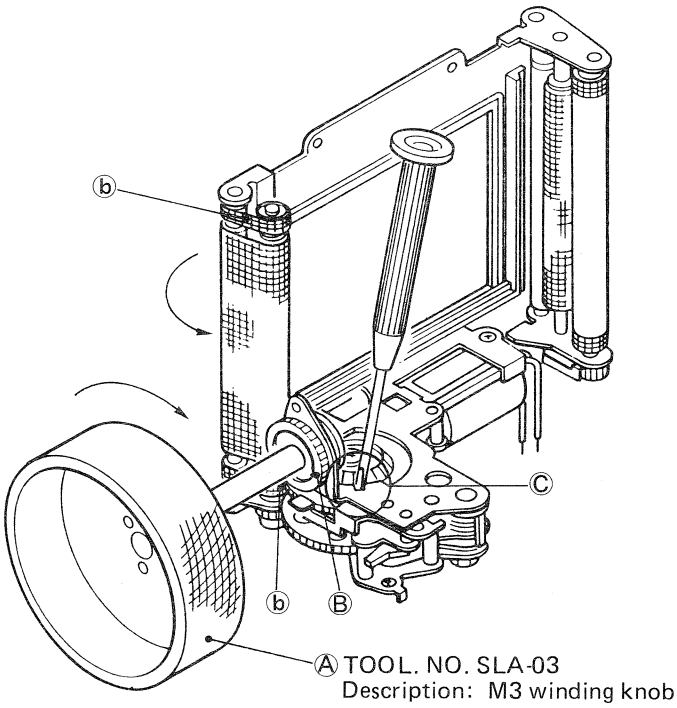

Fig. 60

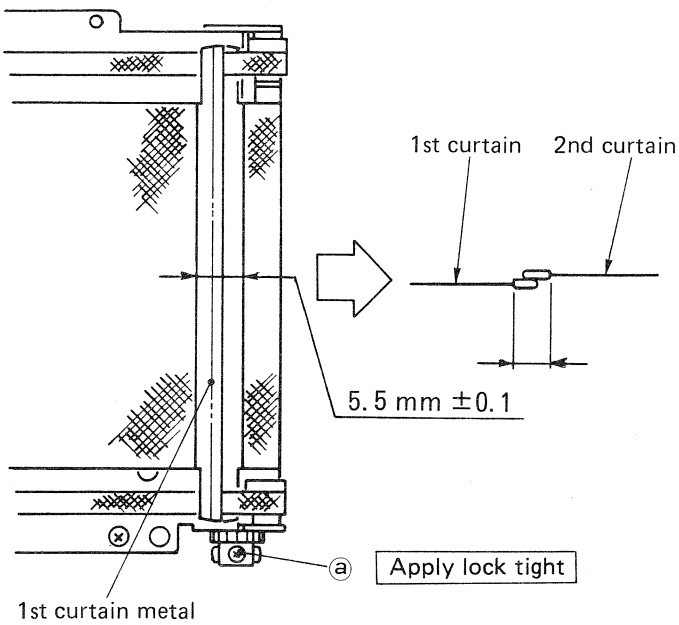

Fig. 61

B. POSITIONING 1ST CURTAIN START

1. After 2nd start positioning, install M3 winding knob, special tool (NO. SLA-03) for Ⓐ to bevel gear Ⓑ(Fig. 60), and wind up 1st curtain clockwise until it stops, then return M3 knob Ⓐ a little from that position and insert No. 3 screwdriver or toothstick into notch Ⓒ (Fig. 60) at the position where first curtain metal returns and stops (1st curtain charge gear pin is hooked on the first curtain start claw) in order to stop the bevel gear from returning. (1st curtain is also stopped) 1st and 2nd curtain overlapped width in this state is shown in Fig. 61. Loosen three screws ⓐ (Fig. 61) so that this width falls within the allowable range of 5.5 mm ±0.1 and turn 1st curtain ribbon roller for adjustment, and tighten screw ⓐ.

Note: After adjustment, be sure to apply "screw lock tight" to screw ⓐ.

2-3 ADJUSTMENT · POSITIONING

1 ADJUSTMENT OF SHUTTER CURTAIN SPEED

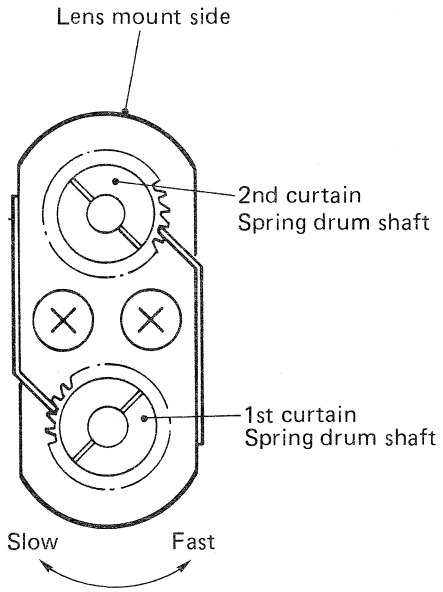

Fig. 62

1. Turn each spring drum shaft to adjust the shutter curtain speed so that it becomes 13.5 ms ±0.2 ms at 1/1000 second.

1st curtain		13.5 ms	
————	1/1000	————	±0.2 ms
2nd curtain		13.5 ms	

Note: The 1st/2nd curtain speed should be the same or the 1st curtain speed may be 0.1 ms higher than the 2nd curtain speed.

Check for supply voltage 6 V. (Fig. 62 shows the position of spring drum, as viewed from the bottom camera body.)

2 ADJUSTMENT OF SHUTTER SPEED

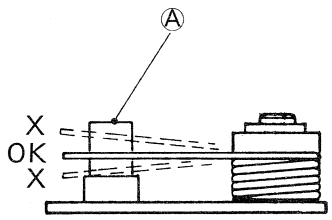

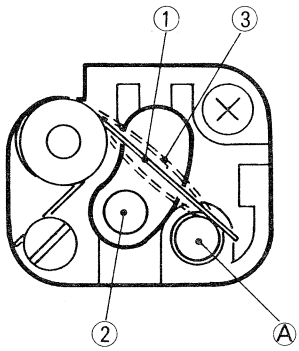

Fig. 63

1. The shutter speed should be adjusted for high shutter speed 1/1000. (A correct shutter speed value is obtained for 1/500 to 4 seconds, but in this case, the shutter speed should be checked.)

2. To adjust the shutter speed, bend contact ① for adjustment of the clearance between trigger switch contact ① (Fig. 63) and operation pin. If the clearance is increased for ②, the shutter speed is reduced. (3)

Note: When bending this contact, pin Ⓐ (Fig. 63) and contact should hit each other in parallel. Check that supply voltage is 6 V.

3 1ST CURTAIN BOUNCE ADJUSTMENT

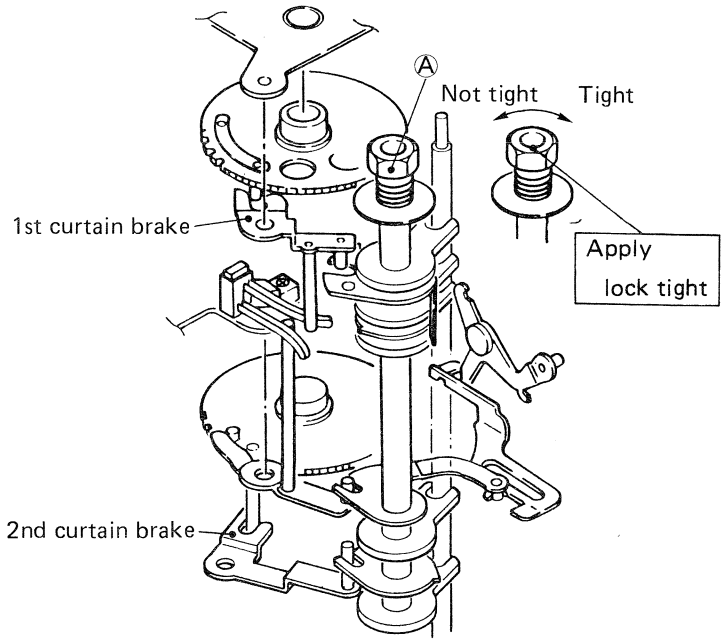

Fig. 64

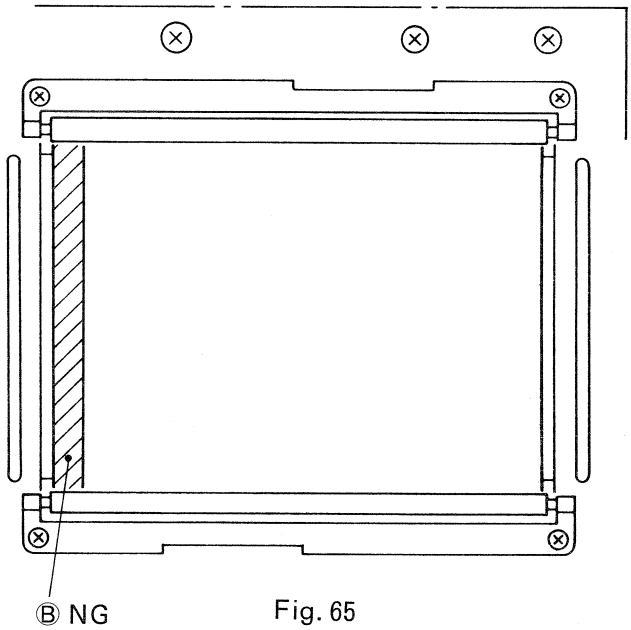

Fig. 65

A. CHECK OF 1ST CURTAIN BOUNCE

Set the shutter speed dial to 1/60 sec. and check 1st curtain bounce by using a shutter tester (F1400).

B. CHECK OF REMAINING 1ST CURTAIN METAL

Attach F. holder to camera body and check the remaining 1st curtain metal in F. holder picture frame (Fig. 65).

Note: The metal must not remain in the picture frame.

C. ADJUSTMENT

Adjustment for above #A and #B will be made by turning nut Ⓐ (Fig. 64).

D. RE-CHECK

Check it by releasing shutter at 1/1000 sec. and 1/60 sec. or 1/30 sec. alternately. The metal must not remain in the picture frame.

Note: After adjusting apply screw-lock tight to the Ⓐ nut.

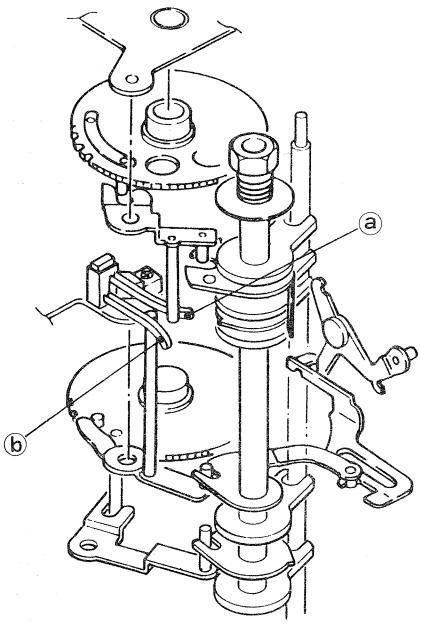

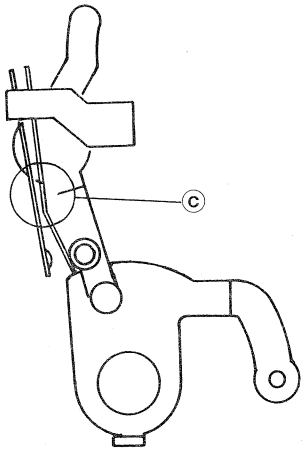

Fig. 67

ⓐ : 1st curtain side synchro contact

ⓑ : 2nd curtain side synchro contact

Fig. 66

After shutter speed and shutter bound adjustments, flash/synchro adjustments are required.

1. Set the shutter speed to 1/60 ms, and bend 1st curtain side contact ⓐ (Fig. 66), then make timing adjustments with a shutter tester so that the contact interval becomes 0.2 ms or more.

2. Adjust so that 2nd curtain side contact ⓑ (Fig. 66) is ON when the shutter is charged, and when it is released, the contact is OFF.

   Note: For 2nd curtain side contact, bend it as shown in ⓒ (Fig. 67) to avoid chattering, and bend the operating pin side contact in such as manner that the operating pin is pushed.

   * Synchro contact employs a double contact to enhance contact efficiency.

5 MECHANICAL SHUTTER LEVER ADJUSTMENT

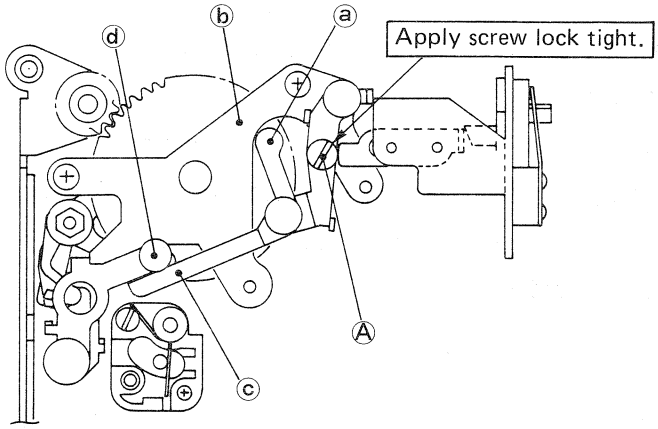

Fig. 68

1. Set the release selector to the mechanical shutter position to cock the shutter.

2. Turn eccentric screw (A) to adjust it so that there is no clearance between tips (a) and (b), and section (c) does not push pin (d).

Note: Change the release selector several times to check for each lever clearance. After adjustment, be sure to lock the screws as well as eccentric screw (A).

6 ADJUSTING THE WIND-UP OVERSETTING AMOUNT

When the film advance crank is turned continuously, the shutter charge gears (1st/2nd curtains) are set, then the film advance crank and clutch are disengaged, thus completing the film wind-up. (When the clutch is disengaged before shutter charge, the 1st curtain unexpectedly runs at the same time as the film is advanced, and when the oversetting amount is small, sometimes the mirror will rises up suddenly. When the oversetting amount is large, no film can be wound up, and even when the wind-up can be set, the clutch becomes unsmooth when the film advance crank is released - irregular wind-up occurs.)

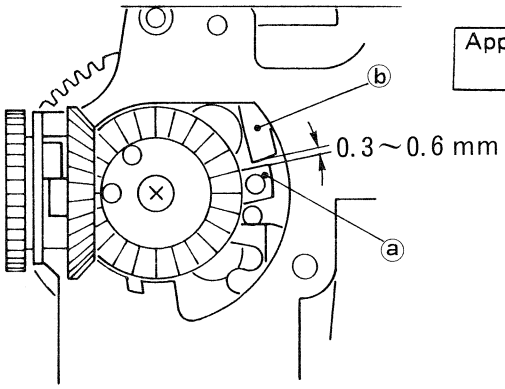

Fig. 69

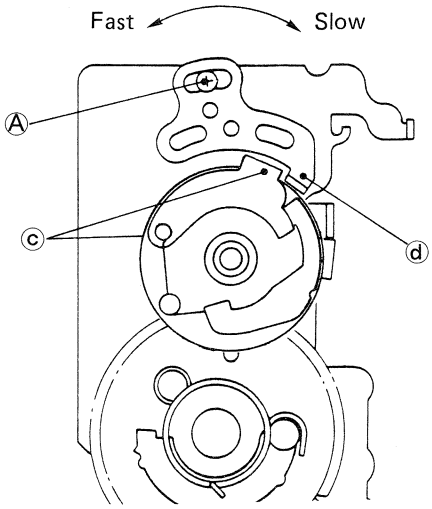

Fig. 70

A. ADJUSTMENT

When the film advance crank is turned continuously and the clearance between (a) (Fig. 69) of 2nd curtain charge gear and 2nd curtain latch (b) becomes 0.3 to 0.6 mm, adjust stopper (d) so that the clutch (c) (Fig. 70) on the wind-up base plate is disengaged, by loosening screw (A).

Note: This adjustment can be made only when the mirror housing is removed.

B. CONFIRMATION

When the film advance crank is slowly turned, 1st curtain should not run, and no mirror should be up. The crank should operate smoothly when the clutch is OFF. (Check it by releasing the shutter several times.)

Note: Apply Screw Lock Tight to the threaded portion (A).

7 ADJUSTMENT OF SHUTTER RELEASE LEVER

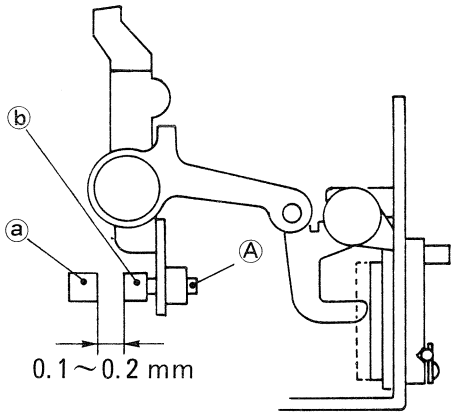

Fig. 71

A. ADJUSTMENT

Set the lever in wind-up conditions, and turn adjust screw (A) to adjust so that the clearance between (a) and (b) is 0.1 to 0.2 mm. (Fig. 86)

Note: If this spacing cannot be adjusted, the shutter will not be released from time to time, and it may cause the shutter to be loose; therefore, when the film advance crank base plate is removed, be sure to release the shutter a few times for checking.

After adjustment, apply Screw Lock Tight to screw (A).

8 ADJUSTMENT OF S4 SWITCH

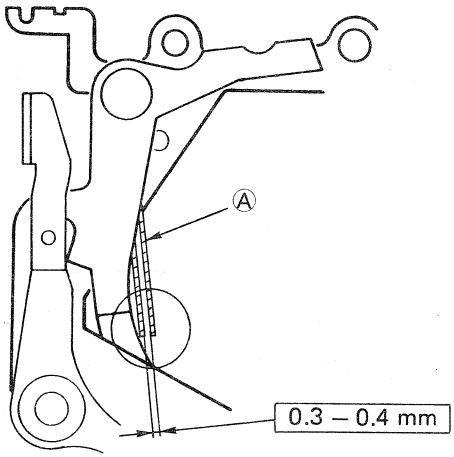

Fig. 72

A. ADJUSTMENT

Bend the contact Ⓐ for adjustment so that the clearance between contacts is 0.3 to 0.4 mm with the film advanced.

Note: If the contact pressure is weak, the winder may not operate from time to time.

9	ADJUSTMENT OF MIRROR ANGLE	1/1	42

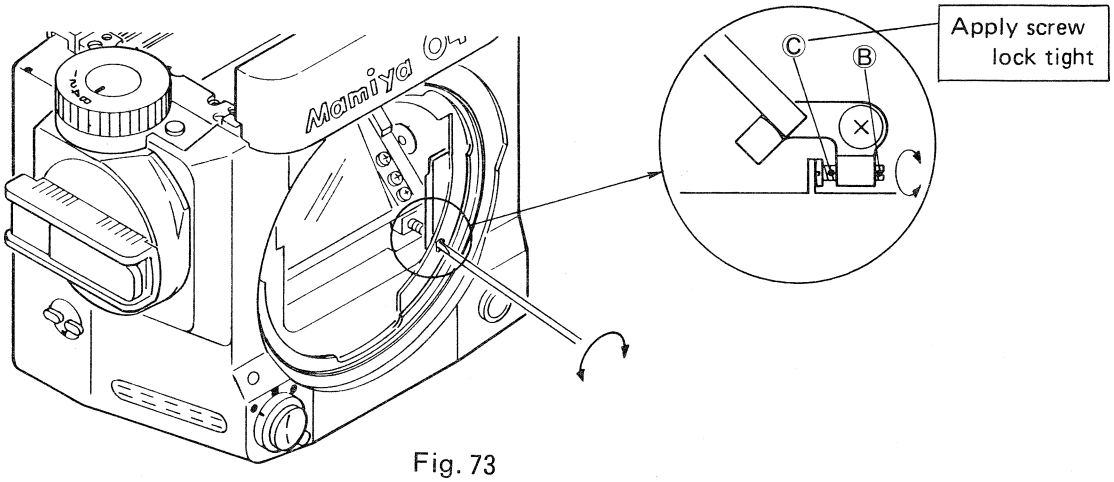

Fig. 73

Adjustment is made by turning (B) screw.

Note: Apply screw-lock tight to the screw after adjustment. (C)

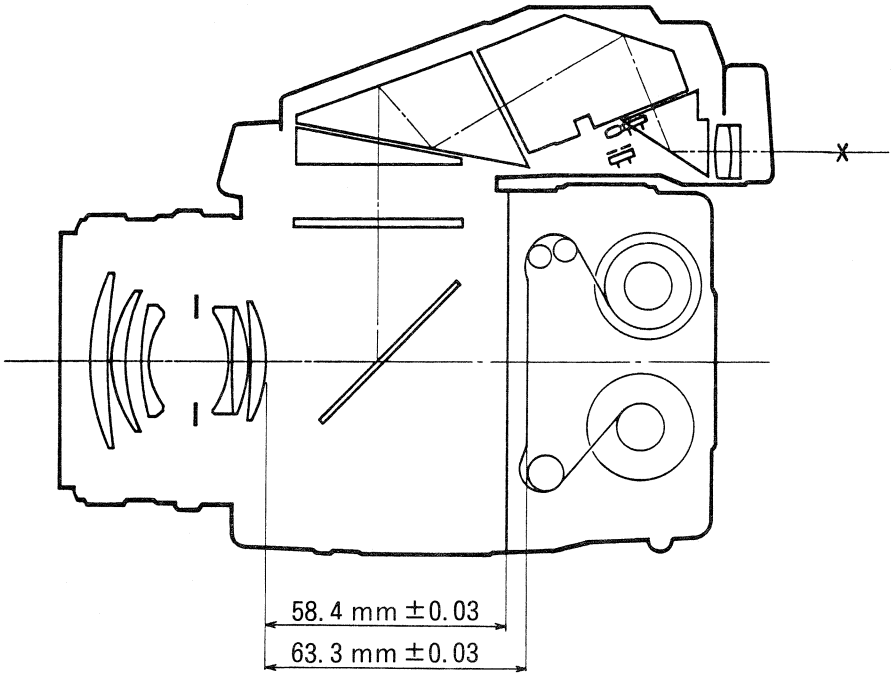

Fig. 74

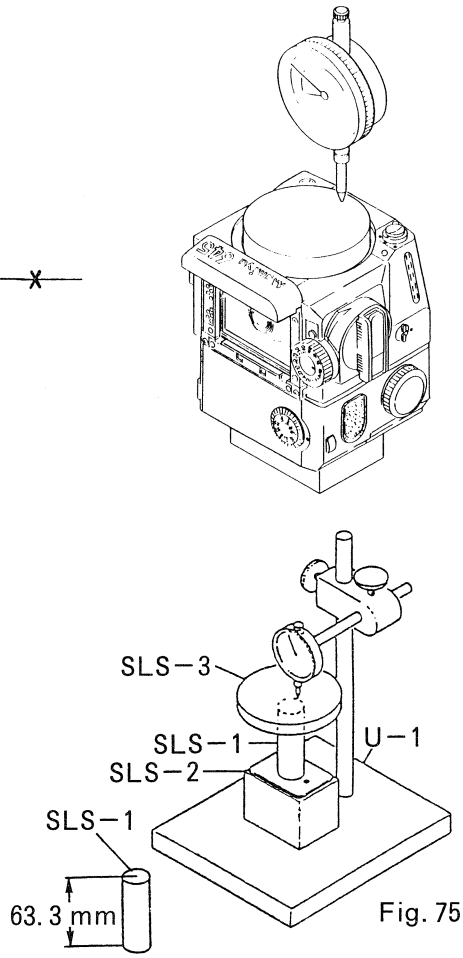

Fig. 75

With this camera, no adjustment for bayonet surface flatness is possible: with the bayonet installed on the camera body, milling is applied to the body back surface to enhance accuracy of the flange back and bayonet surface flatness, and these parts are assembled into one unit.

* If an unexpected trouble takes place or the film holder frame is replaced, accuracy is maintained, but recheck is required. For checking, the flange back is the same as with SLS.SLT (M645, M645 1000S.J), so that with film holder frame installed on the camera body, a tool for SLT/SLS shown in Fig. 75 should be used for checkup.

11 ADJUSTMENT OF FINDER INFINITY

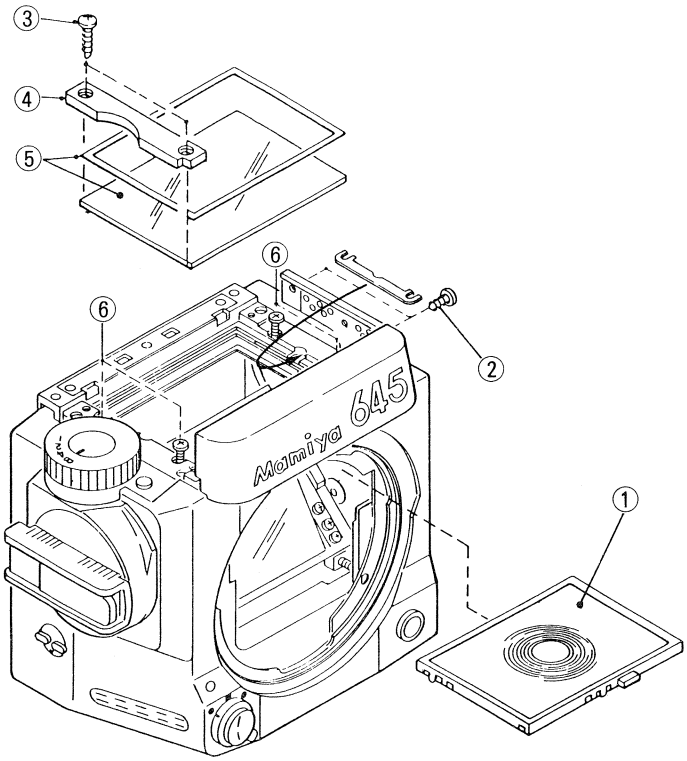

Fig. 76

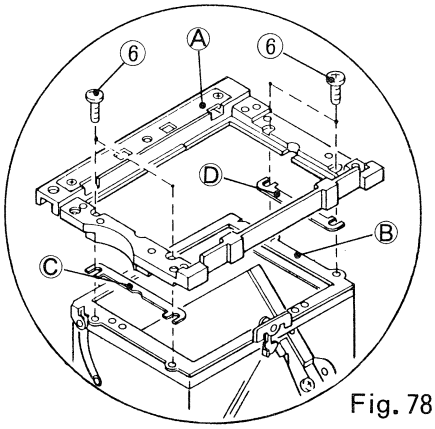

Fig. 78

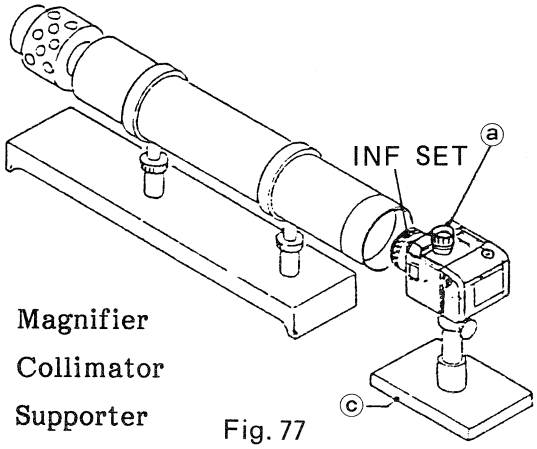

a : Magnifier
b : Collimator
c : Supporter

Fig. 77

1. Remove ① to ⑤ in the numerical order illustrated above after checking mirror angle (Fig. 76) and loosen four screws ⑥.

2. Install the Fresnel lens again and attach the standard lens (80 mm/F.2.8) to camera body, set it as shown in Fig. 77 and check the focus.

ADJUSTMENT

1. Insert special washers Ⓒ Ⓓ into the gap between Ⓐ and Ⓑ Fresnel frames (Fig. 78) for adjustment.

Ⓒ Washer (left)		Ⓓ Washer (right)	
Parts No.	Thickness (t)	Parts No.	Thickness (t)
6200 25491	t = 0.03 mm	6200 25411	t = 0.03 mm
25481	0.05 mm	25431	0.05 mm
25471	0.1 mm	25421	0.1 mm
25461	0.3 mm	25411	0.3 mm
25451	0.5 mm	25391	0.5 mm

2-4 ELECTRONIC CIRCUIT

1. SHUTTER

B. 4 - 1/100 sec.

⦿ AE, ▣ AE lock

AE and AE lock devices are only functionable in usage of AE prism finder. Shutter will be operated at 1/1000 sec. When shutter dial is set at these position, without AE prism finder.

2. BATTERY CHECK

To check the condition of the Battery, depress the Battery check button. If Battery voltage is still good enough, the Battery check lamp should illuminate. If the lamp does not illuminate, the Battery voltage is lower than 4.8 volt and the Battery should be replaced as soon as possible. While the power drive operation, depress the Battery Check Button. If the Battery check lamp flickers or does not light up, it also indicates to replace the Battery.

3. SAFETY FEATURE

When attempting to release shutter without removing the Dark Slide from the film holder, the shutter release button will lock.

4. ISO/ASA FILM SENSITIVITY

Iso dial has been built in the film holder

Film speed range: ISO 25 - 6400 in 1/3 step

5. REMOTE CONTROL

It is possible to operate the camera in remote control by using Transmitter/Receiver RZ together with the power drive N.

6. CONTROL BY POWER WINDER N

Controlled by a signal from switch for completion of film advance.

7 BATTERY TYPE

One 6 V silver-oxide battery 4SR44 or 6 V Alkaline-Manganese battery 4LR44

EACH SWITCH

1. POWER SWITCH: S0

   ON: Current flows into circuits.

   OFF: Shutter release is locked by cutting current.

2. RELEASE SWITCH S1 (S0, S1)

   ON: Electrical current in the circuits will be maintained for 10 sec. by this switch although S0-switch is turned off by your finger detaching the release button.

3. RELEASE SWITCH S2 (S0, S1, S2)

   ON: 1st shutter curtain is released by 1st operation of MC. on condition that S1 and S3 switches are in "ON" and S4 and S5 switches are in "OFF".

4. TRIGGER SWITCH S3

   OFF: This switch is turned off, when the mirror rises completely and a signal of start for shutter speed computation goes into IC-1.

5. WINDER SWITCH S4

   ON: This switch is turned on when the 2nd shutter curtain closes and a signal for start of film advance is sent into winder curcuit. This switch is turned off when film is would completely.

6. DARK SLIDE SWITCH S5

   ON: Input voltage to the circuit will become low when this switch is turned on by the dark slide. Consequently shutter release is locked electrically.

TERMINALS AND PINS

Body front

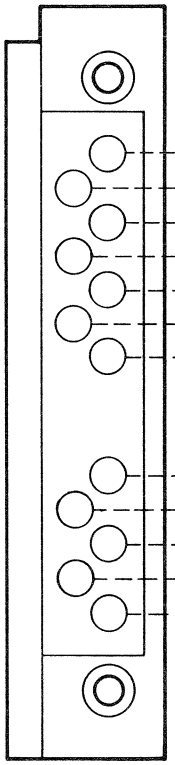

Body back

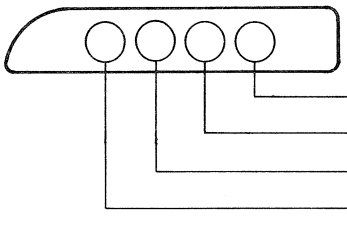

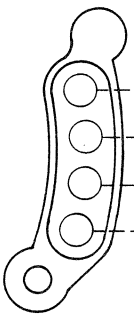

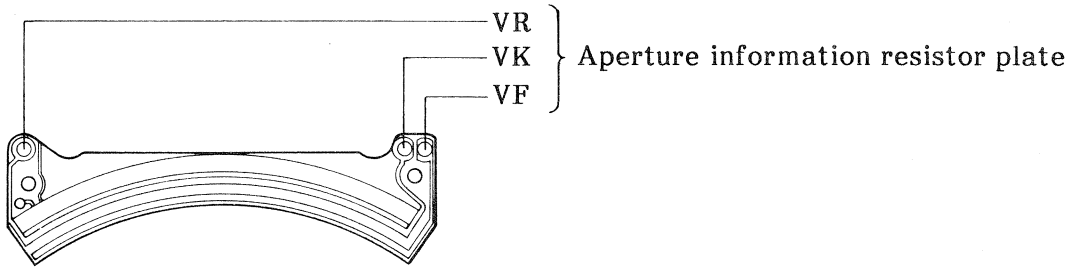

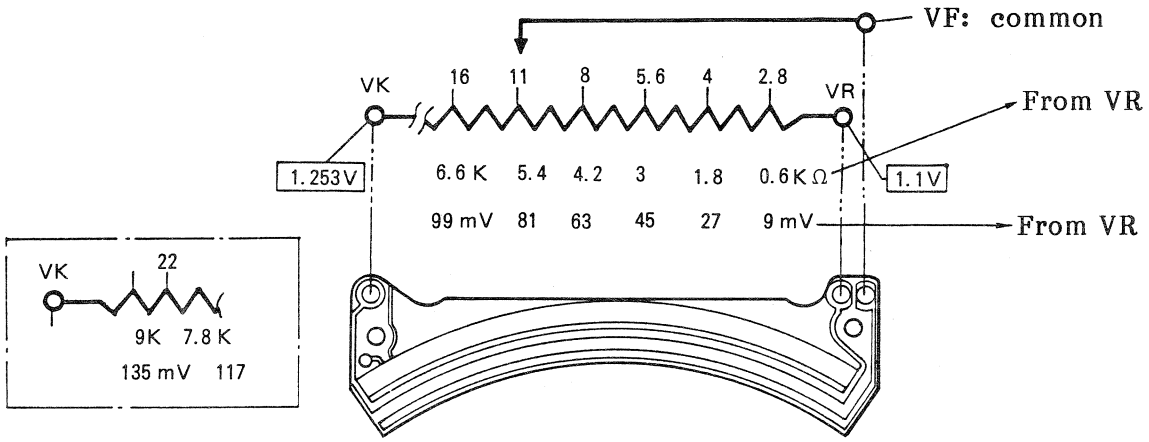

Input remote controll

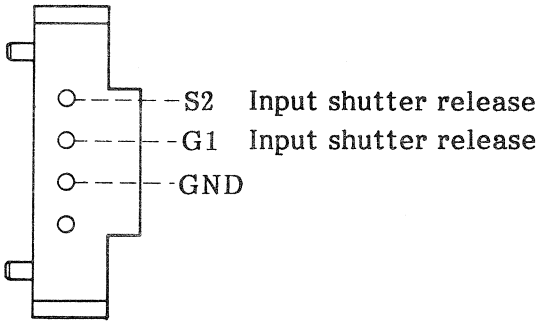

Hot-shoe

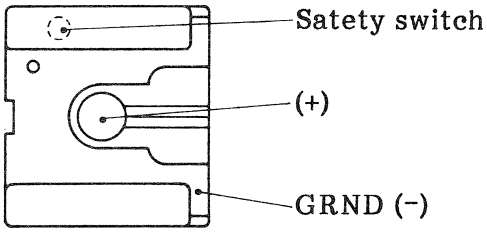

x-synchro terminal

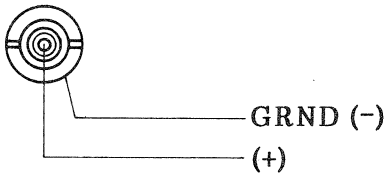

4 TIMING CHART

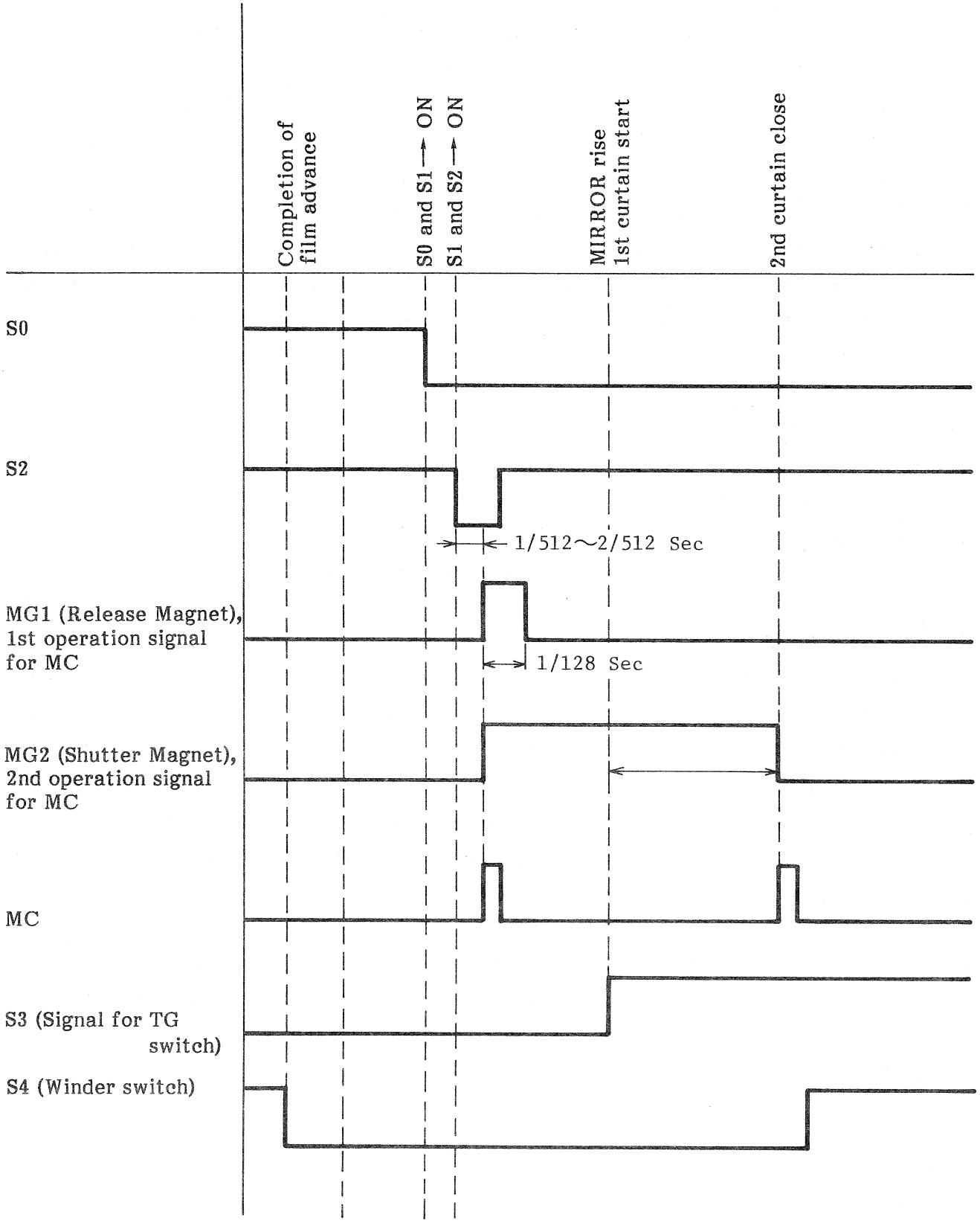

1. S0 POWER SWITCH

1) Current flows into circuits with S0 switch being turned on. Simultaneously capacitors of C1, C2 and MC are charged within 500 msec.
2) As power supply voltage 6 V are supplied to IC2, approximately 3 V (2.85 V - 3.15 V) will appear as an output volt. to operate IC1. (IC1 is converter to change analogue data to digital data and control such data.)
3) IC5 detector stabilizes power supply volt. and will supply volt. to No. 8 pin of IC4.

   Note: If power supply voltage lower less than 4.8 V, potential to No. 8 pin in IC4 will be in LOW level, so that potential to No. 27 pin in IC1 will also become low. Consequently shutter release signal is blocked and shutter release is locked electrically.

2. S1 RELEASE SWITCH

1) When power switch signal goes into No. 35 pin of IC1 from No. 11 pin of IC3 through TR7, power timer in pin circuit will operate to hold power supply volt. for 10 sec.
2) Metering of exposure time will begin in AE prism finder.

   Note: IC3 stabilizes operation of MC by generating pulse.

3. S2 RELEASE SWITCH

1) A release signal goes into No. 34 pin of IC1 from IC4 through TR12. A signal for MG1 release magnet is generated from No. 24 pin of IC1 and MC will operate and then 1st shutter curtain will run after mirror rising up.

   Note: A signal for MG2 shutter magnet will be generated from No. 25 pin of IC1. It will take 40 msec. to 50 msec. until IC1 operating MC from S2 release switch - ON. This time lag will be required to avoid miscalculation of IC1 if shutter release button depresses continuously and quickly.

2) When S3 trigger switch is turned off, start signal for counting shutter time value is transmitted to No. 26 pin of IC1. After the lapse of determined shutter time MG2 shutter magnet is turned off by the signal from No. 25 pin of IC1. Then moving coil is activated and 2nd curtain closes.

6 CHECK OF REFERENCE VOLTAGE

TERMINALS FOR AE PRISM FINDER

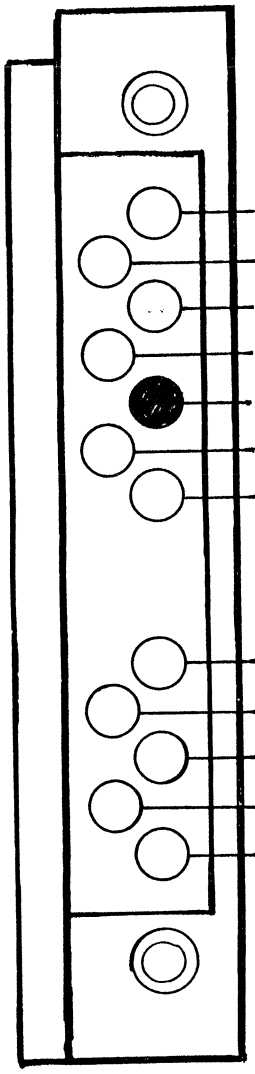

	DCV Meter connection (+) Red terminal	(-) Black	S1	Out put
G3, G2, G1, G0	Shutter TV.	GRND	ON	1.3 V or 0 V
GRND	(-)			
TG	After completion of ~~winding up~~ shutter	GRND	ON	1.3 V
Vcc	(+)	GRND	OFF	6 V
AMG2	2nd curtain start signal	GRND	ON	0 V
ASL	S_2 (Hi.Lo) - AE.p.f	GRND	ON	6 V
AS1	S_1 (Hi.Lo) - AE.p.f.	GRND	ON	3 V
SV	ISO data	GRND	ON	0 V
VK	Reference voltage	GRND	ON	0 V

G0	G1	G2	G3	
0	0	0	0	AE
1	0	0	0	1/1000
1	1	0	0	1/500
0	1	0	0	1/250
0	1	1	0	1/125
1	1	1	0	1/60
1	0	1	0	1/30
0	0	1	0	1/15
0	0	1	1	1/8
1	0	1	1	1/4
1	1	1	1	1/2
0	1	1	1	1
0	1	0	1	2
1	1	0	1	4
1	0	0	1	B
0	0	0	1	AEL

Fig. A

Note: G3, G2, G1, G0 — When shutter speed dial is set at any shutter speed, 1.3 volt will appear on each terminal marked "1". **(Fig. A)**

If 1.3 volt does not appear on the "1" terminals or 1.3 volt appears on the terminals marked "0", check of contact brush for the shutter speed dial will be requried.

* 3 output voltage will appear for 10 sec. on AS1 terminal by power timer operation.

2-5 TROUBLE SHOOTING

1 CANNOT RELEASE SHUTTER

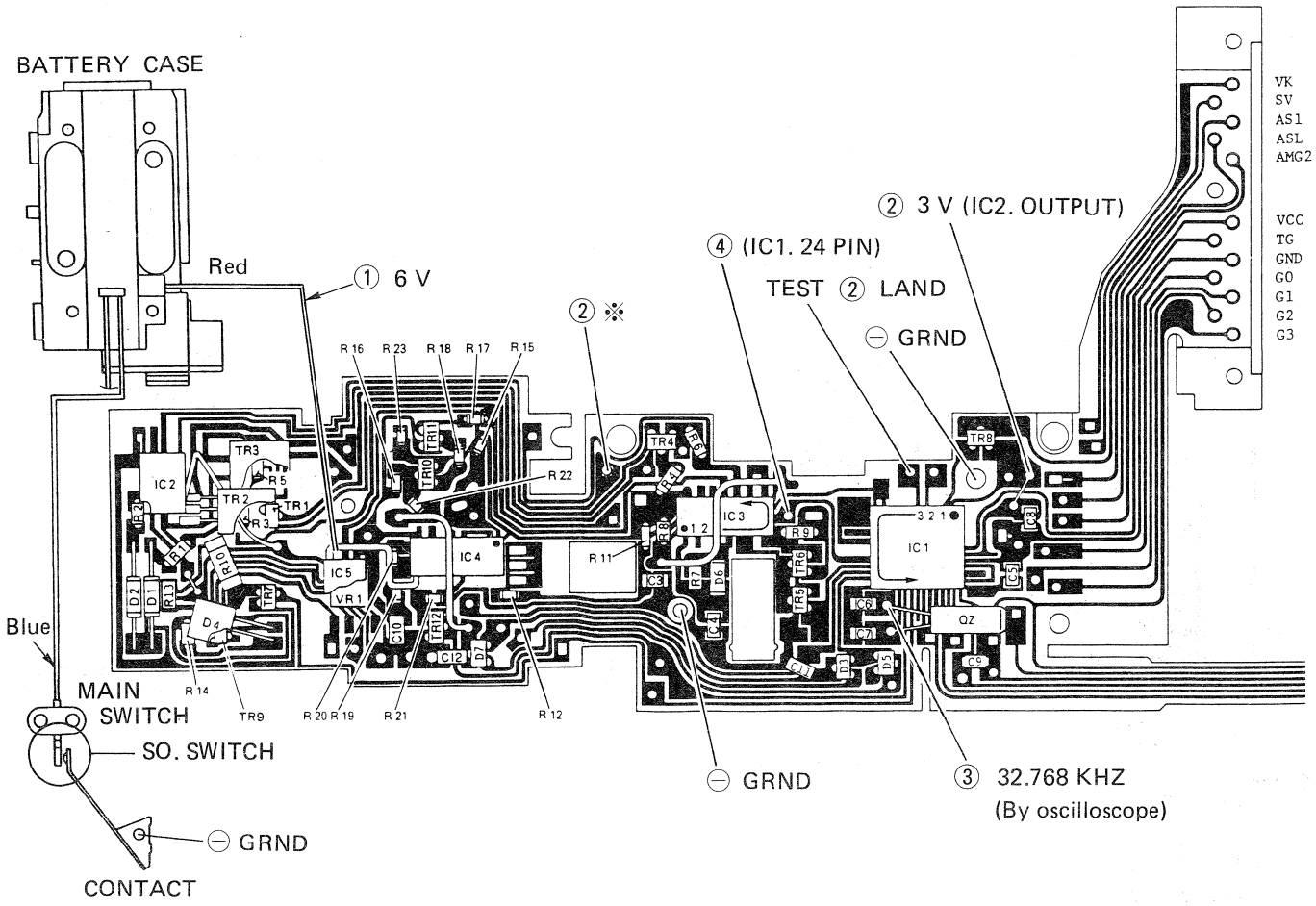

DCV Meter connection

(+) Term - Each land

(-) Grand

Land	Output	Check piont
①	6 V: Power supply Volt: (SO = ON)	Check point 1) Battery Contact 2) Red leadwires - Body earth 3) Contact efficiency of SO-switch 4) (-) Blue leadwires - Cold solder or broken
②	Approx 3 V, IC2 (SO = ON)	1) Hard PC board - Cold solder 2) IC2 - Cold solder 3) IC2 - Defect
③	32.768 kHz Quartz oscilator (SO = ON)	By using osciloscope 1) Quartz - Cold solder 2) Quartz - Defect 3) C6 or C7 - Cold solder or defect 4) IC 44 pin or 45 pin - Cold solder

1	CANNOT RELEASE SHUTTER	2/6	53

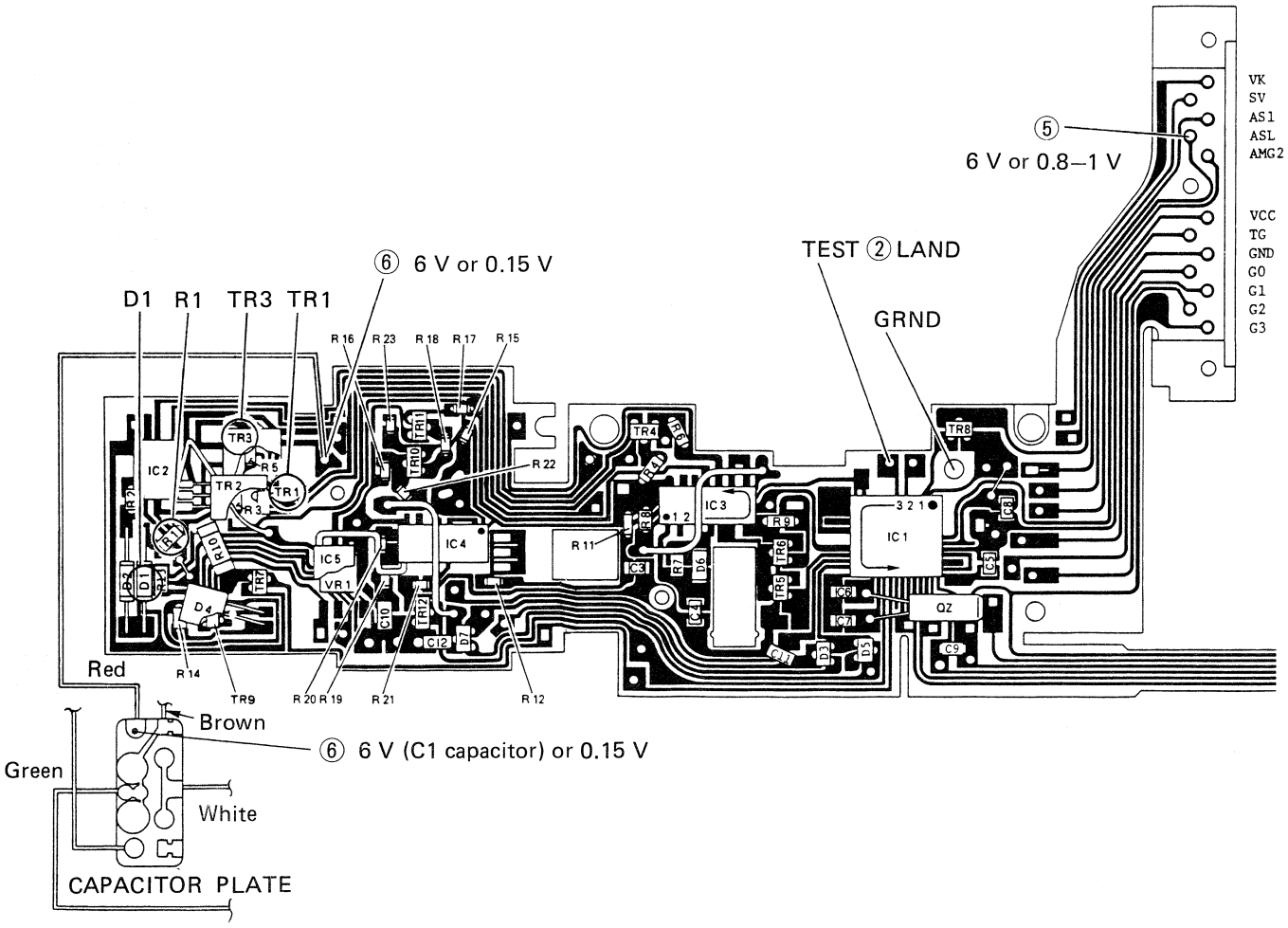

④	2 V or more IC1 24 pin	When test land ② is earthed 2 V output will appear. If no output, IC1 will be defect. Note: When test land ② is earthed and detached from GRND, shutter release signal and 2nd curtain release signal will appear respectively. You can confirm the above by shutter operation.
⑤	6 V or 0.8 - 1.0 V ASL monitor (SO = ON)	When land ② is earthed, the output 0.8 V - 1.0 V will appear. 1) TR1 or TR3 - Cold solder or defect 2) R5 (1 kΩ) or R3 (200 Ω) - Cold solder or defect
⑥	6 V or 0.15 V (C1 capacitor)	When test land 2 is earthed, 0.15 V or less output will appear. 1) R1 (150 Ω) or D1 - Cold solder or defect 2) MC - Coil cut or weak power. * When test land ② is detached from GRND, C1 is charged within 500 msec and 6 V output will appear on land ⑥.

1 CANNOT RELEASE SHUTTER

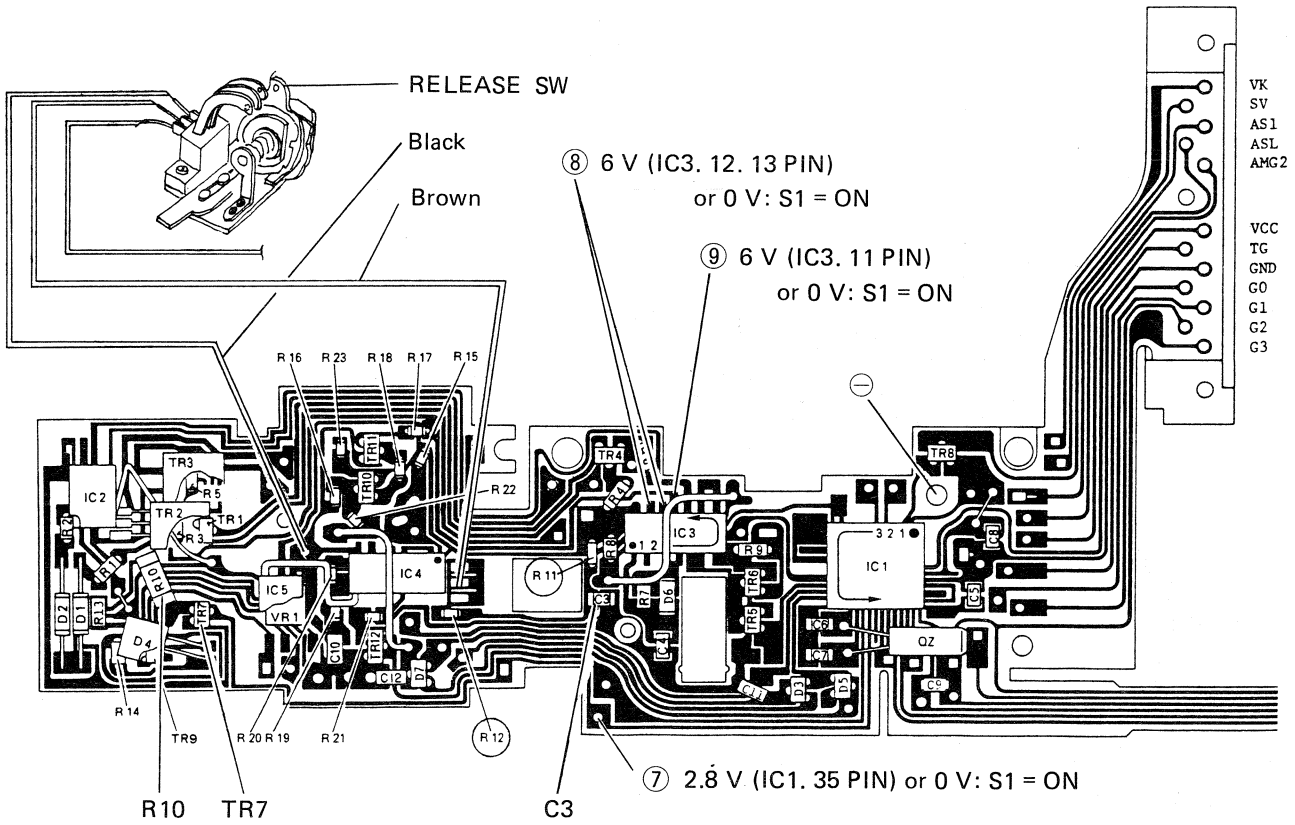

⑦	2.8 V or 0 V IC1 35 pin (SO = ON)	Input terminal of power switch
⑧	6 V or 0 V IC3 12 and 13 pin (SO = ON)	For prevention output of Time lag 1) Release switch S1 – Contact efficiency 2) Brown and black leadwires – Broken 3) R11 (100 kΩ), R12 (10 kΩ) C3 (0.47 μF) – Cold solder or defect Note: When the above is checked by an osciloscope, 6 V output will appear approximately 50 msec. later from S1 switch OFF.
⑨	0 V or 6 V, IC3 11 pin (SO = ON)	Transmit a signal to IC1, 35 pin for time lag prevention. 1) TR7, R10 (100 kΩ) – Cold solder or defect 2) IC3 – Defect Note: When S1 switch is turned on IC3-11 pin will receive a signal from IC3-12, 13 pins and the signal goes to IC1-35 pin. Current in IC3 circuit will be kept by C3 even if the S1 switch is turned off, so that the signal is continuously generated from IC3-12, 13 pins.

1 CANNOT RELEASE SHUTTER

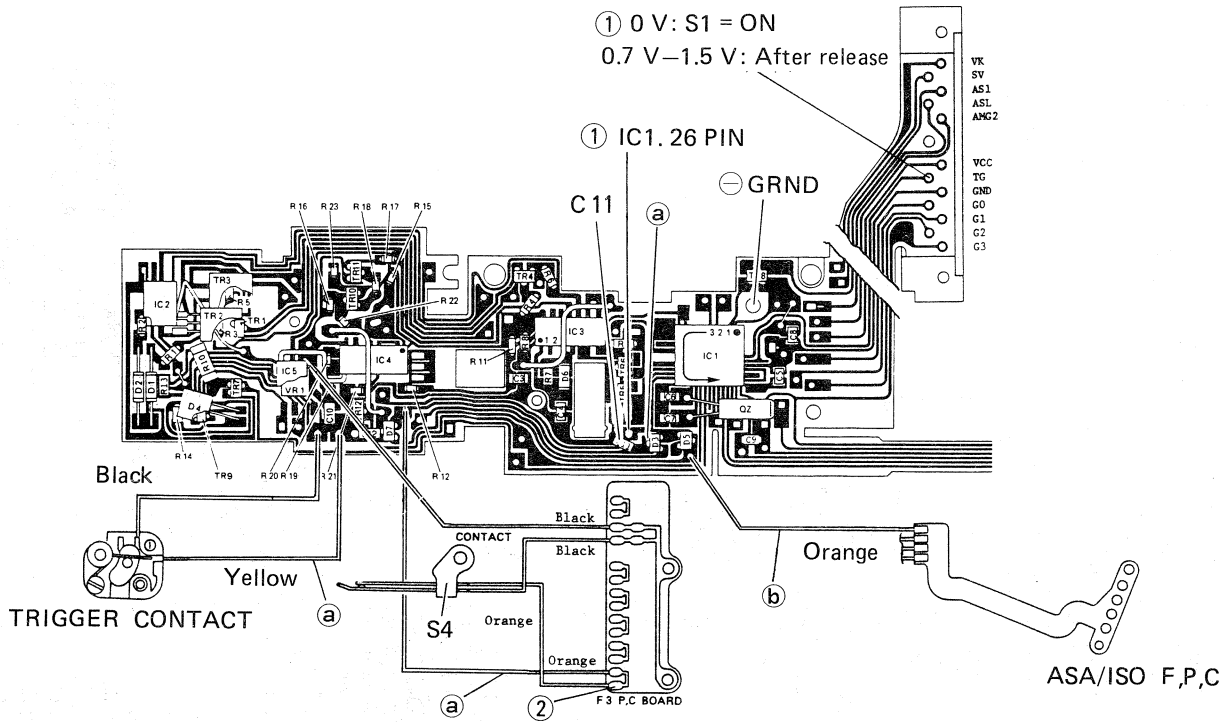

A. FUNCTION OF S3 TRIGGER SW, S4 AND S2 SWITCHES

S3 SW: Shutter time

S4 SW: Shutter release

S2 SW: Operation of power timer

Land	Output	Check piont
①	0 V or 0.7 to 1.5 V IC1-26 pin TG term	When S1 Sw is turned on with shutter cocked, there is no output voltage on IC1-26 pin, but after shutter is released 0.7 to 1.5 V output will appear. 1) S3 Trigger SW - Contact efficiency 2) (+) Yellow leadwire of S3 - Cold solder or broken ⓐ 3) (-) Black leadwire of S3 - Cold solder or broken ⓐ
②	5.5 V or 0 V S4 switch, Orange leadwire land	When S1 SW is turned on with shutter cocked, 5.5 V output voltage will appear on the land. After shutter is released output voltage will become Zero volt. 1) S4 Sw contact - Contact efficiency 2) Orange leadwire - Body earth or short circuit * If approx. 1 volt output will appear, check circuit in RFH. 4) Orange leadwire - Body earth or short circuit 5) C11 - Defect

1 CANNOT RELEASE SHUTTER

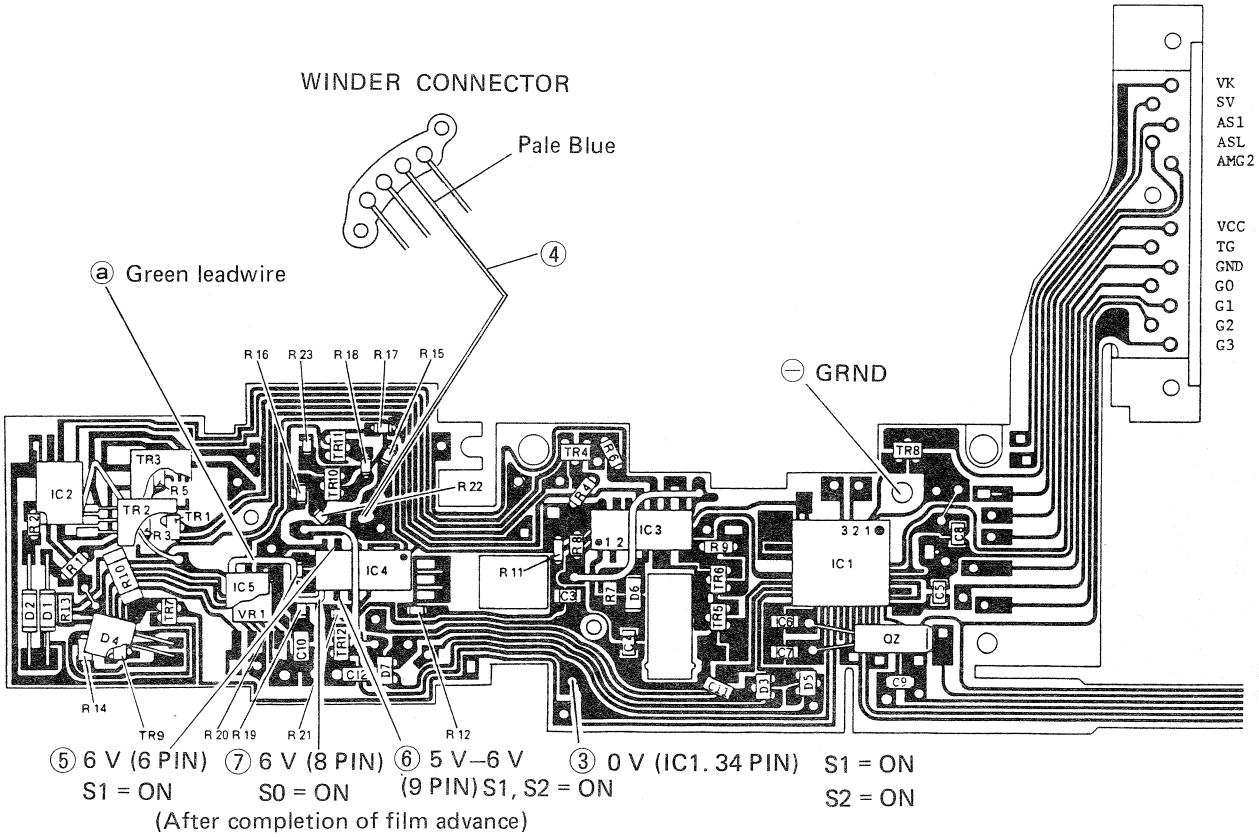

③④	0 V, IC1-34 pin (S1, S2 = ON)	③ Release input Land ④ Land of pale blue leadwire from winder contact 1) R1 (100 kΩ) – Cold solder or defect 2) S2 SW – Contact efficiency 3) Pale blue leadwire – Cold solder or broken
⑤	6 V IC1-6 pin (S1 = ON)	When Winding lever is wound 6 volt output will appear on IC1-6 pin. 1) TR10 and 11 – Cold solder or defect 2) R17 (100 kΩ), R18 (10 kΩ) – Cold solder or defect 3) S4 switch – Closed contact
⑥	5 V – 6 V, IC4-9 pin	1) R20 (100 kΩ) or R11 (10 kΩ) – Cold solder or defect 2) C10 (0.33 μF) – Cold solder or defect
⑦	6 V, IC4-8 pin (SO = ON)	1) Green leadwire between IC 2) IC5 – Cold solder or defect Note: IC5 detector send a signal of battery voltage to IC4-8 pin. When the Battery voltage falls to under 4.6 volt potential of IC4-8 pin will be LOW level. Therefore shutter release is locked.

1	CANNOT RELEASE SHUTTER	6/6	57

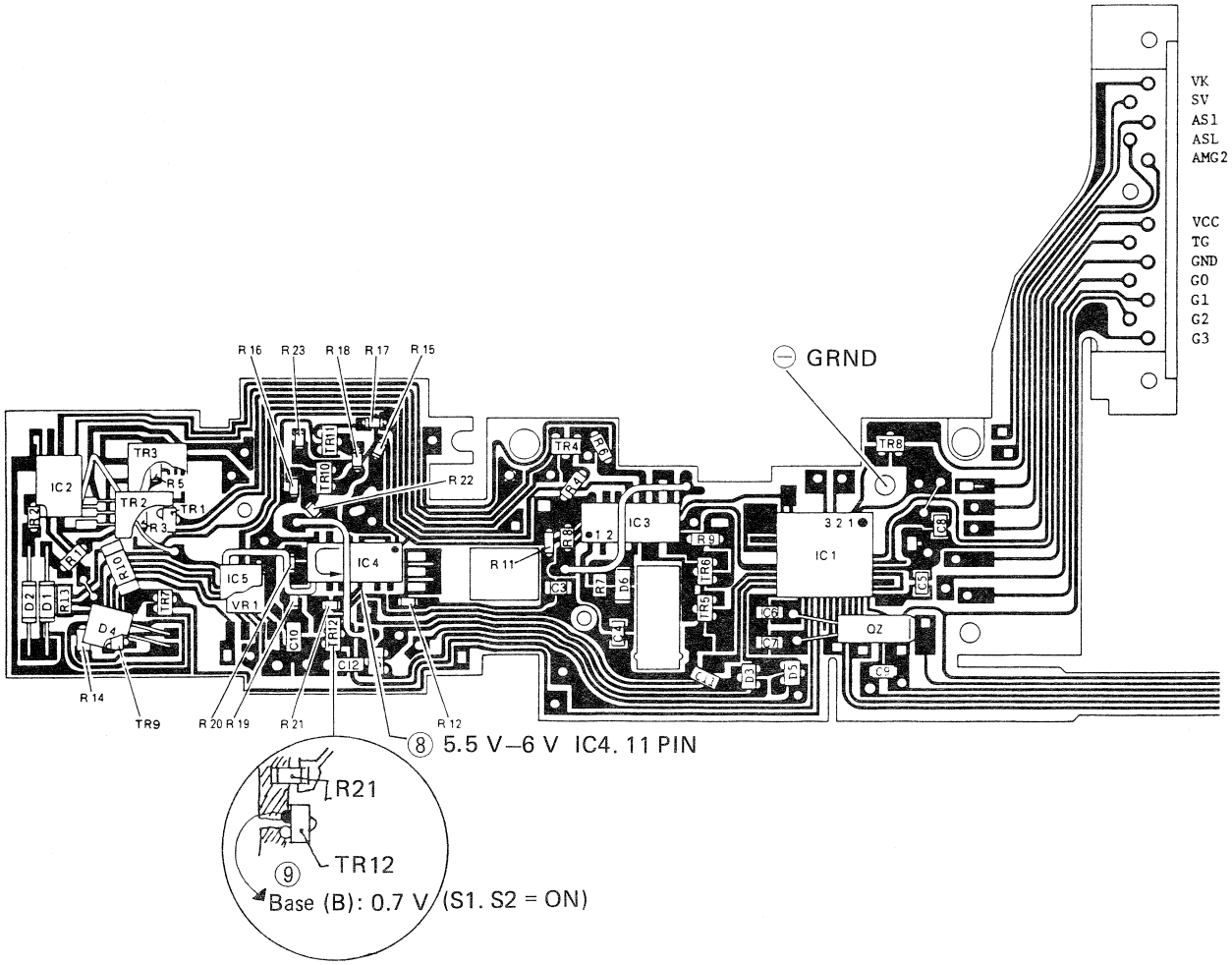

⑧	5.5 - 6 V, IC4-11 pin S1, S2 = ON	1) IC4-10, 11, 12 and 13 - Cold solder defect
⑨	0.7 V, TR12 Base (S1, S2 = ON)	1) R12 (100 kΩ) TR12 - Cold solder defect

2	2ND CURTAIN DOES NOT CLOSE	1/2	58

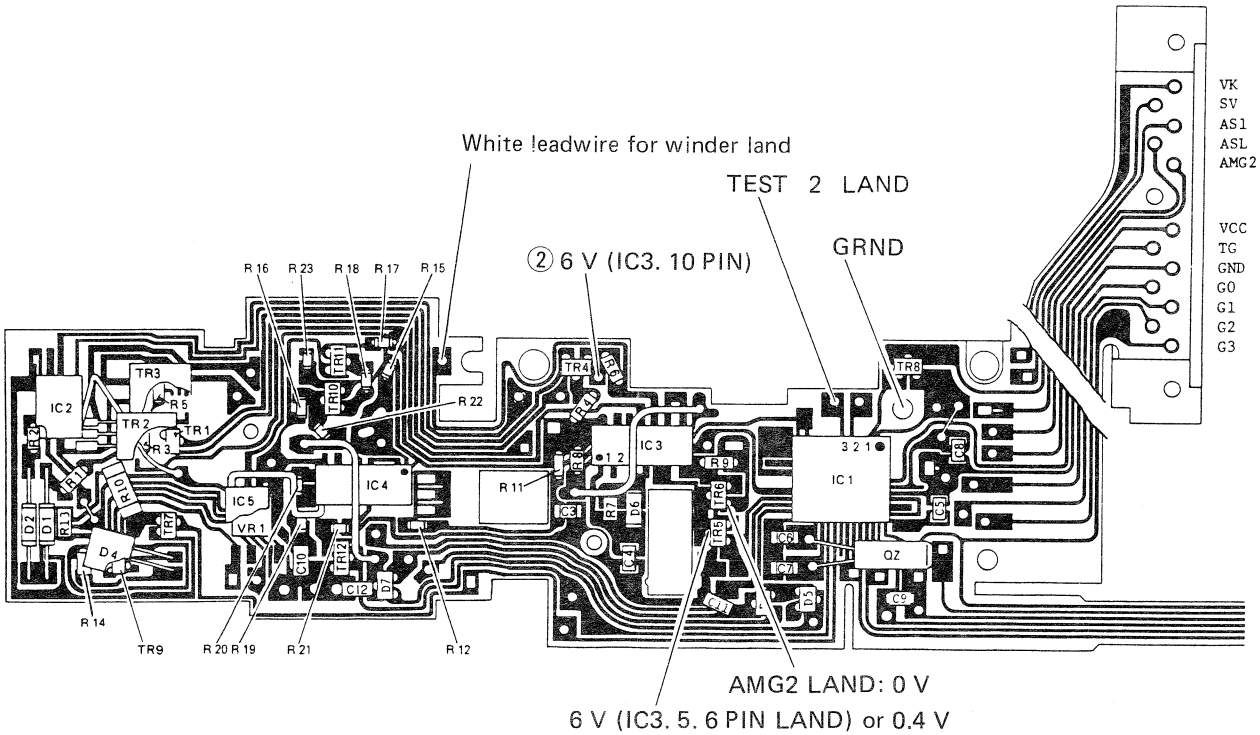

Land	Output	Check piont
①	6 V or 0.4 V, IC3-5 and 6 pins	When shutter is closed and IC3-5 and 6 pins is earthed, 6 volt output will appear. When shutter is cocked and land ② is earthed, 0.4 volt output will appear. 1) R8 (100 kΩ) - Cold solder or defect 2) TR5 - Cold solder or defect 3) Yellow leadwire - Cold solder or broken
	Always 0 volt IC3-1 pin	1) TR6 - Defect With land ② earthed the frequency will appear. (By oscilloscope) 1) R7 (200 kΩ), C4 (0.33 μF) - Cold solder or defect 2) IC3-4, 5 and 6 pin - Cold solder
②	6 V or wave frequency IC3-10 pin	When land ② is detached from GRND, 6 volt output will appear on IC3-10 pin for 40 msec to 60 msec. Frequency will appear by checking with oscilloscope. 1) IC3-1, 2, 3, 8, 9 or 10 pin - Cold solder 2) White leadwire for winder - short 40~60 msec (When land ② is detached from GRND)

2 2ND CURTAIN DOES NOT CLOSE

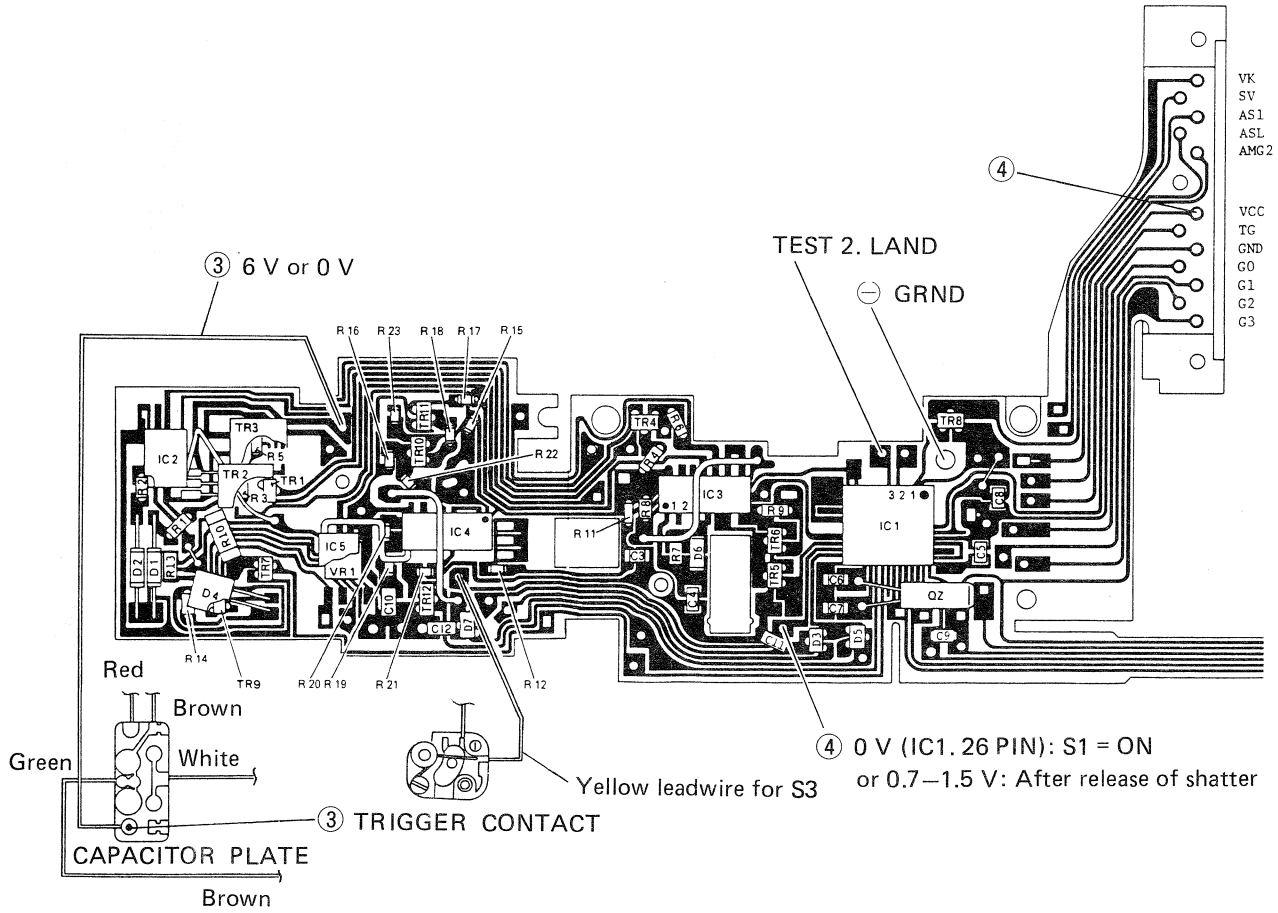

③	6 V or 0 V Green leadwire term for C2 (SO = ON) 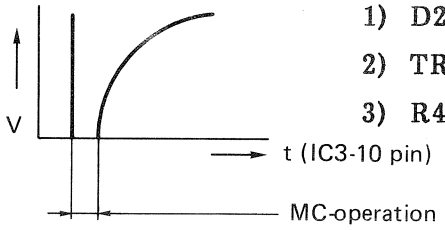	When land ② is earthed and then detached, output will be Zero bolt. After operation of MC 6 volt output will appear. 1) D2, R2 (150 Ω) - Cold solder or defect 2) TR2, TR4 - Cold solder or defect 3) R4 - Cold solder or defect
④	0 V or 0.7 - 1.5 V IC1-26 pin (S1 = ON)	Check of trigger switch When shutter cocked and S1 switch is turned on, output will be Zero volt. After release of shutter output will be 0.7 V to 1.5 V. 1) Trigger SW - Must be OFF when MIRROR rised. 2) Yellow leadwire for S3 - Body earth or short. 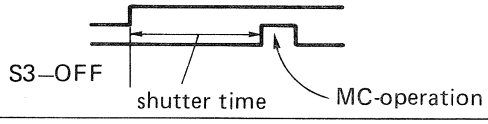

3	BCK LED DOES NOT ILLUMINATE, BUT BATTERY VOLT IS OK	1/1	60

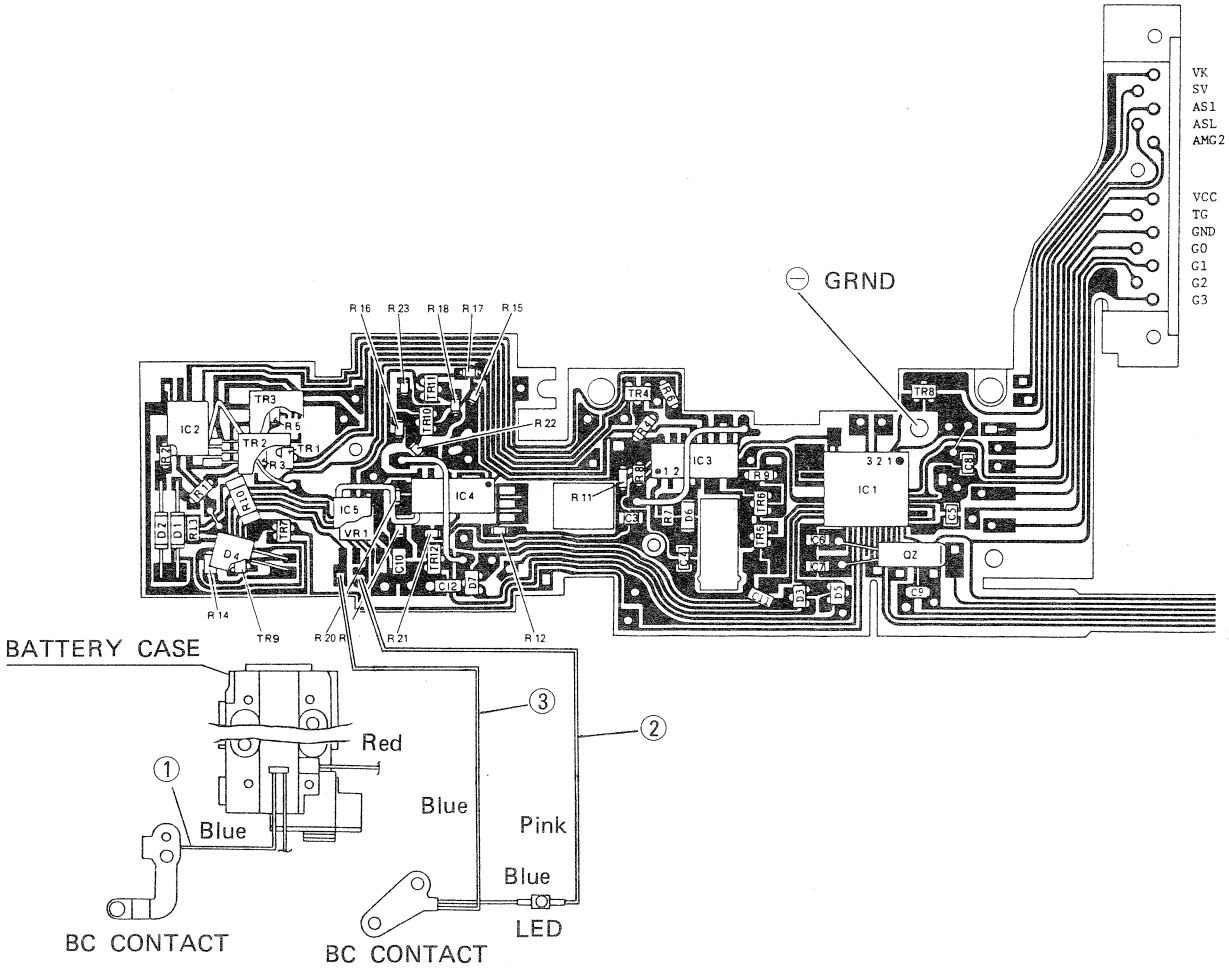

Land	Output	Check piont
①	6 V or 1.6 - 2 V	BC-contacts - Contact efficiency
	(SO = ON)	1) Blue leadwire - Cold solder or broken
③		2) Leadwires ② and ③ - Cold solder or broken
②		6 volt output will appear on pink leadwire of LED.
		When BCK button is pressed, output will be 1.6 to 2 volt.
		1) TR9 - Cold solder or defect
		2) LED - Defect
		3) Pink leadwire - Body earth or short
		4) VR1 - Wrong Adjustment (By Factory Adjustment)
		5) TR7 - Cold solder or defect
		6) D4 - Defect
		* Adjustment of VR1
		4.9 volt: LED is put out.
		5.2 volt: LED illuminates.
		(Must use a stabilizing power supply.)

4	CANNOT RELEASE SHUTTER WITH POWER WINDER ATTACHED	1/2	61

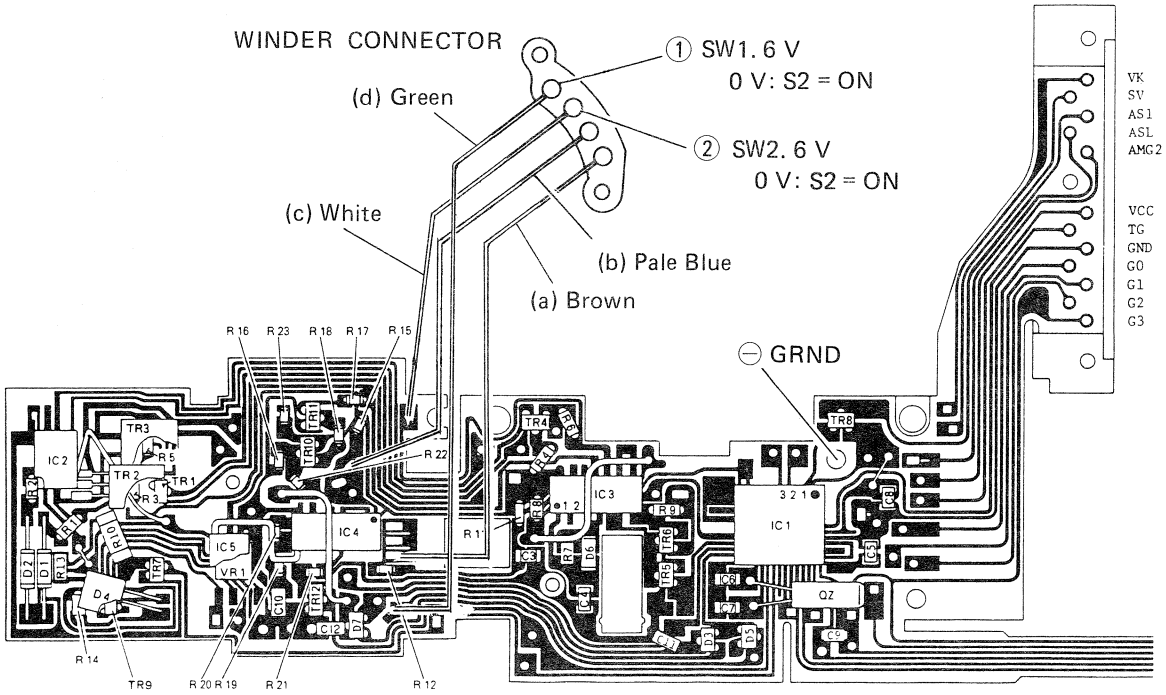

Land	Output	Check piont
①	6 V, SW1 Winder terminal S1 = ON 0 V, (S1 = ON)	6 volt output will appear on winder terminal ① at SO is ON. When S1 SW is turned on, the output volt becomes Zero.
②	6 V SW2, Winder terminal (SO = ON) 0 V, (S2 = ON)	6 volt output will appear on winder terminal ② at SO SW is ON. When S2 SW is turned on, the output volt becomes Zero. 1) Brown (a), pale blue (b) leadwire – Cold solder or broken A. Shutter is released with power winder, but power winder does not work. 1) White leadwire (c) of winder – Cold solder or broken 2) Green leadwire (d) – Cold solder or broken 3) D3 – Cold solder or defect B. After film advanced with winder shutter cannot be released. 1) S4 SW – Contact efficiency 2) S4 SW – Chattering

C. Interval of shutter release is getting longer at continuous photography.

1) Battery voltage - Lower

* When stable battery volt will drop to less than 4.6 V, shutter release will be locked.
When battery energy will return to more than 4.8 V, shutter will be released again.

D. Shutter release and film advance will be repeated after shutter release button depressed.

1) D7 - Cold solder or defect

5	ACTUAL SHUTTER SPEED DOES NOT MATCH WITH SHUTTER SPEED DIAL	1/1	63	

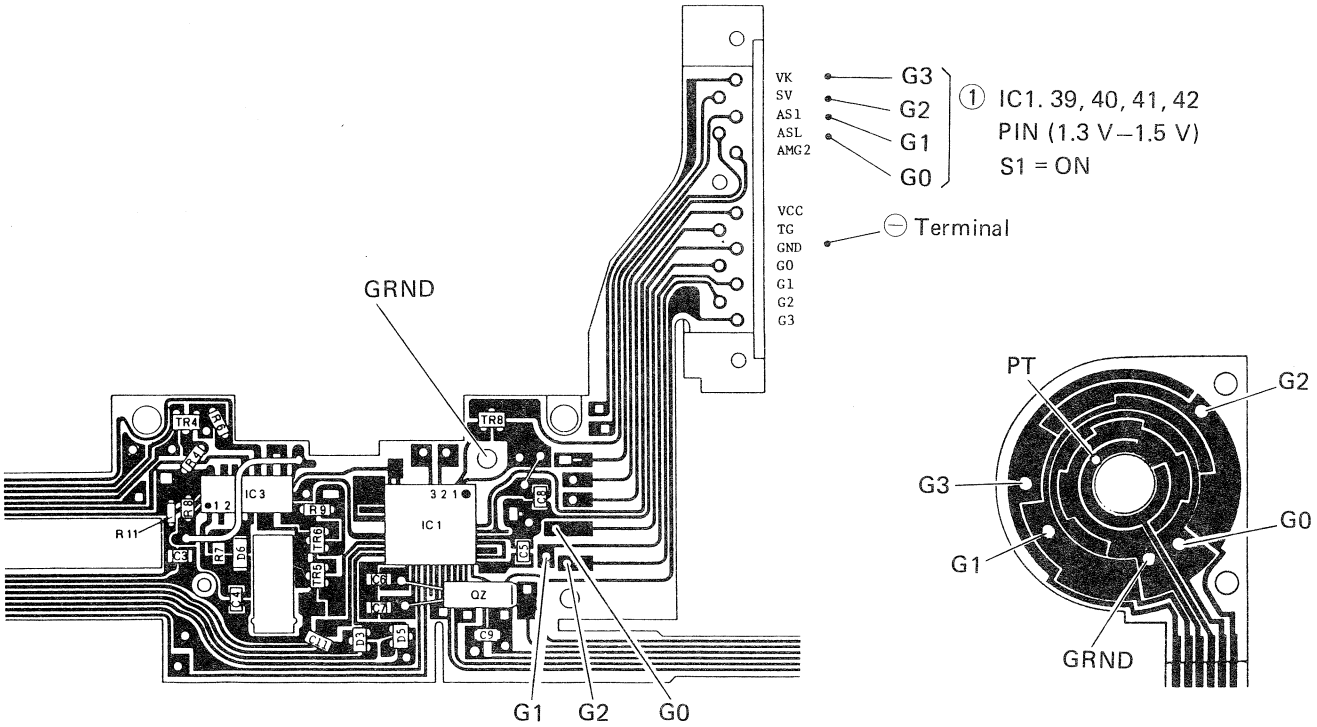

Land	Output	Check piont
①	1.3 V - 1.5 V IC1-39, 40, 41, or 42 pin or G0 - G3 term (S1 = ON)	1.3 V - 1.5 V output volt will appear on the land 1 at shutter dial 1/2. 1) Speed dial brush - Contact efficiency 2) FPC - Broken 3) Soldering joint between FPC and shutter speed dial plate - Cold solder 4) IC1-39 to 42 pin - Cold solder

VOLT

G0 (39)	G1 (40)	G2 (41)	G3 (42)	MODE モード
0	0	0	0	AE
0	0	0	1.3	AEL
1.3	0	0	0	1000
1.3	1.3	0	0	500
0	1.3	0	0	250
0	1.3	1.3	0	125
1.3	1.3	1.3	0	60
1.3	0	1.3	0	30
0	0	1.3	0	15
0	0	1.3	1.3	8
1.3	0	1.3	1.3	4
1.3	1.3	1.3	1.3	2
0	1.3	1.3	1.3	1
0	1.3	0	1.3	2
1.3	1.3	0	1.3	4
1.3	0	0	1.3	B

6 LED DISPLAY OF AE PRISM FINDER

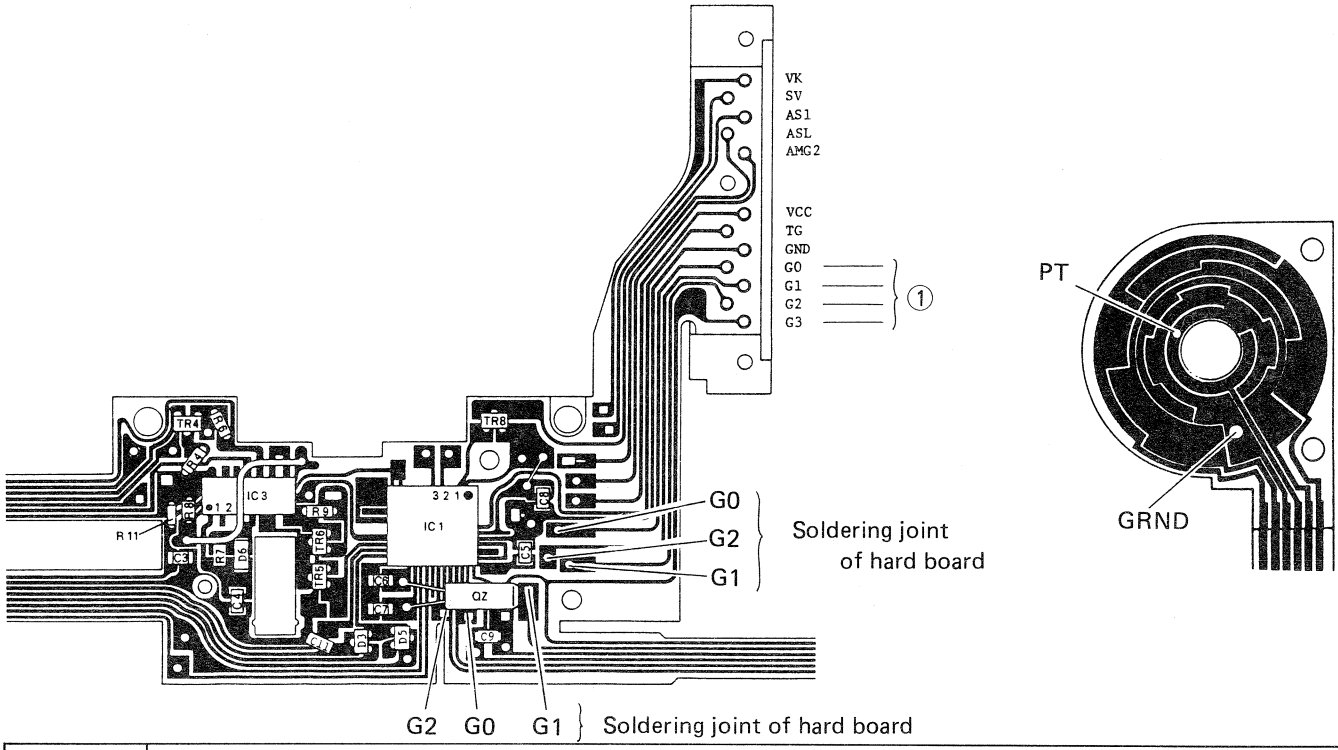

Land	Output	Check piont
①	A. There is no shutter speed display into the AE prism finder.	
	1.2 V - 1.5 V G0 - G3, (SO = ON)	1.2 V - 1.5 V output will appear on Land ① at shutter speed dial 1/2 sec. 1) Finder contact pins - Cold solder 2) Soldering joint of hard board - Cold solder
	B. While shutter button is pressed in halfway turn shutter speed dial a little AE ◉ position. At that time shutter speed LED in finder display will putout within 10 sec.	1) Shutter speed dial (PT) - Contact efficiency or chattering 2) C9 (0.1 μ F) - Cold solder or defect

6 LED DISPLAY OF AE PRISM FINDER

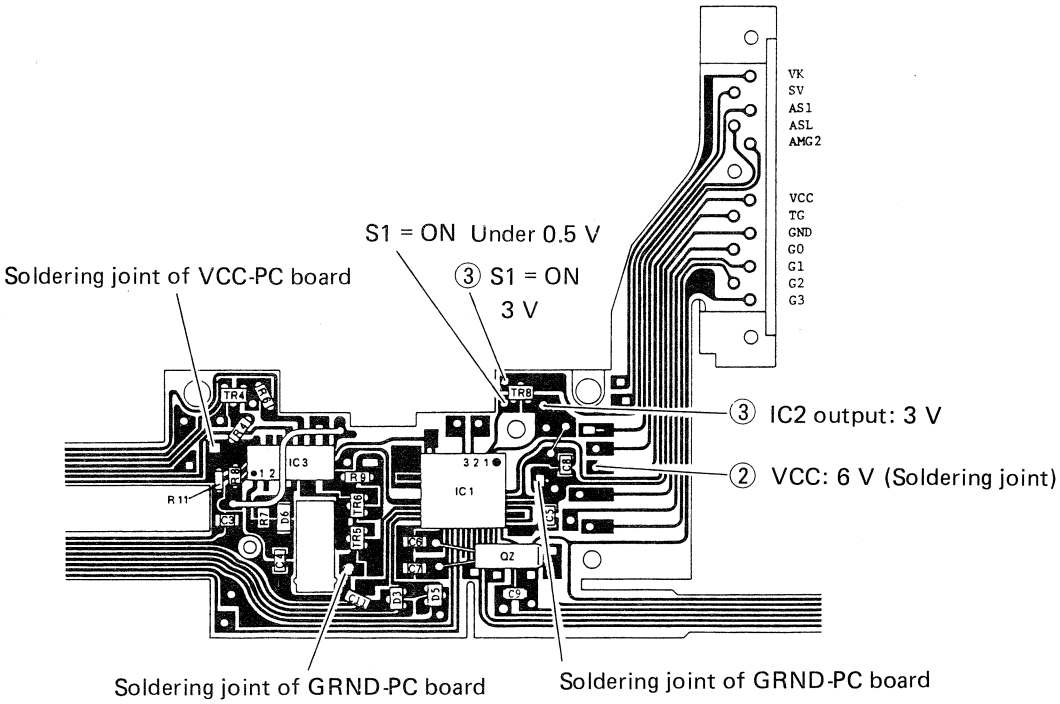

	C. Power timer does not operate so that LEDs putsout soon. (Shutter speed dial: 1/1000 - B)	1) Shutter speed dial (GRND: PT) contacts - Contact efficiency 2) Soldering joint between speed dial PC board and FPC board - Cold solder 3) IC1-40 pin - Cold solder
	D. Finder display (LED) does not appear at S1 SW.ON.	
②	6 V	1) Hard PC board of VCC-GRND - Cold solder 2) Finder contact pin - Cold solder
③	3 V, AS1 - GRND (S1 = ON)	1) Finder contact pin - Cold solder 2) TR8 - Cold solder or defect 3) IC1-19 pin - Cold solder.

6 LED DISPLAY OF AE PRISM FINDER

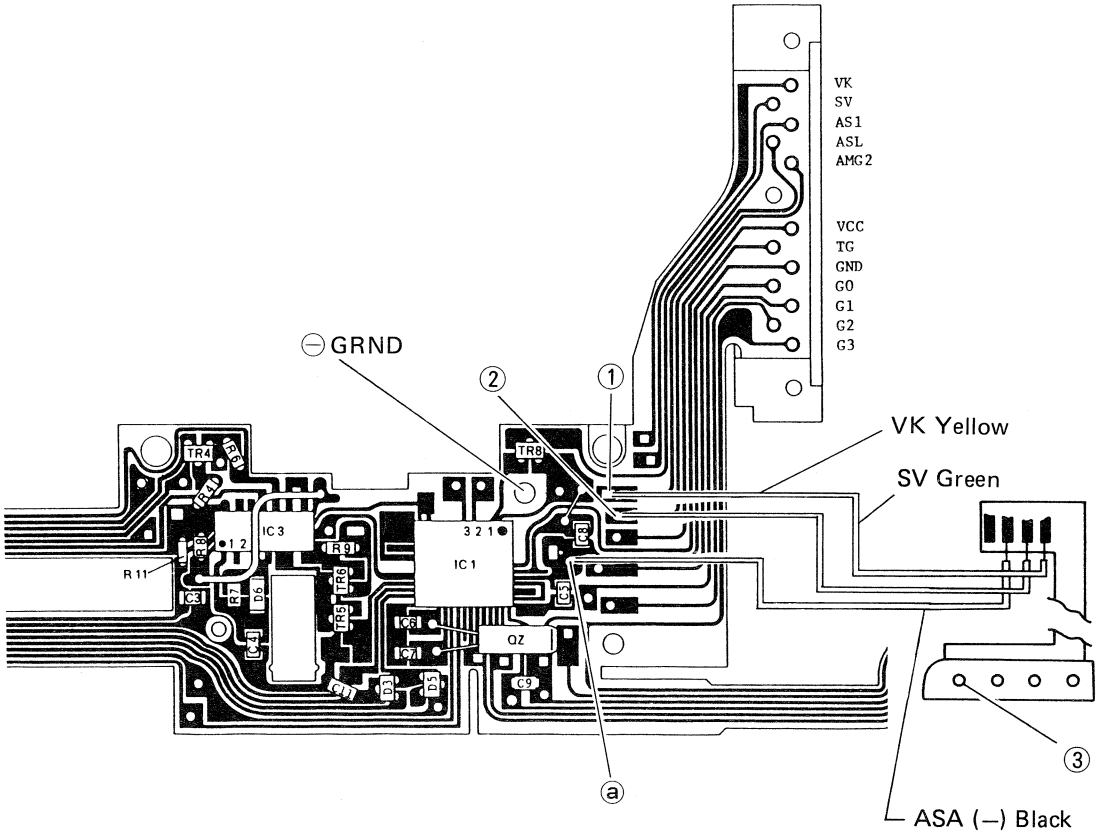

	F. When AE prism finder and FRH are attached to Body, output voltage on land ①, ② or ③ is 0 volt and LEDs are flashing at ISO/100.
①	1.253 V — 1) VK and SV - Cold solder
②	(S1 = ON) — Transmitting pins of RFH
③	1) Yellow leadwire VK - Broken
	2) Soldering joint of the pins - Cold solder
	3) (-) Black leadwire (ASA) - Broken
	G. Two or three steps difference of finder display will occurs when dark slide is inserted and removed.
	1) Black leadwire a - Broken

6 LED DISPLAY OF AE PRISM FINDER

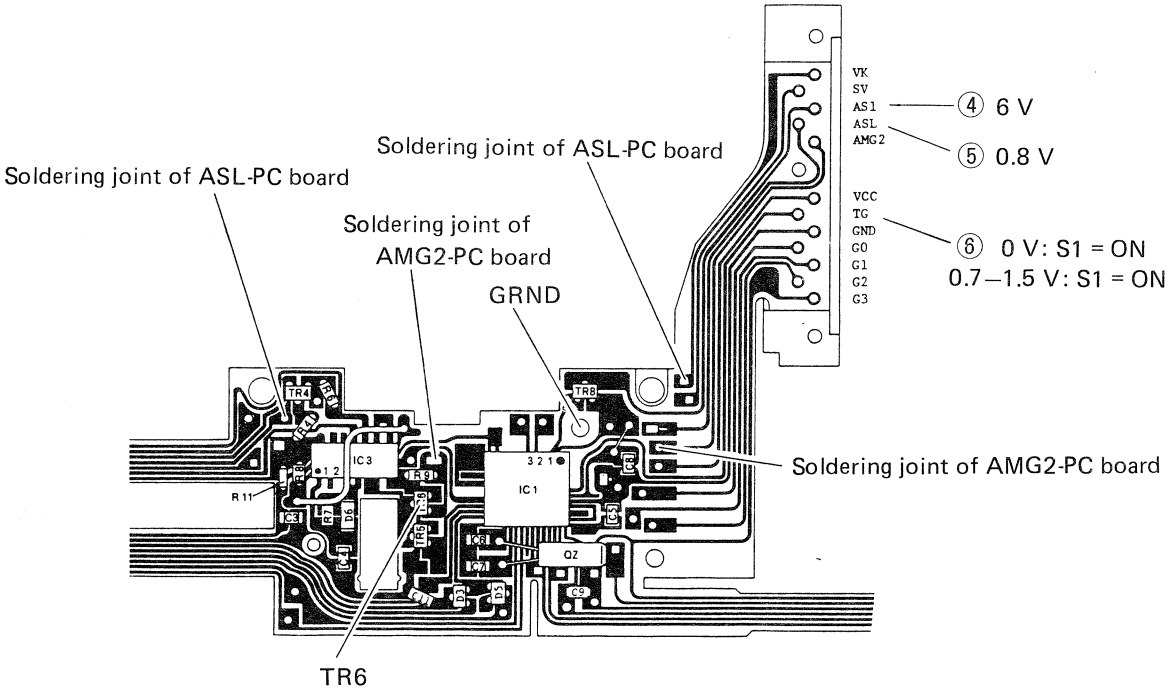

	E. When shutter speed dial is set at AE ◉ position; a) Shutter runs at 1/1000 even if finder display LED illuminates at LT. b) When mirror rises up LED light up at LT.	
④	6 V	Check it in lighting LED at LT. 1) ASL and finder contact pin – Cold solder 2) ASL and Hard PC board – Cold solder
⑤	0.8 V	While shutter operates at LT. 1) AMG2 and Finder contact pin – Cold solder 2) AMG2 and Hard PC board – Cold solder 3) TR6 – Cold solder or defect Note: Output volt: Approx. 6 V
⑥	0.7 V – 1.5 V (S2 = ON) 0 V, (S1 = ON)	After shutter is closed. After completion film winding. 1) TG finder contact pin – Cold solder

7	APERTURE INFORMATION IS INCORRECT	1/1	68	

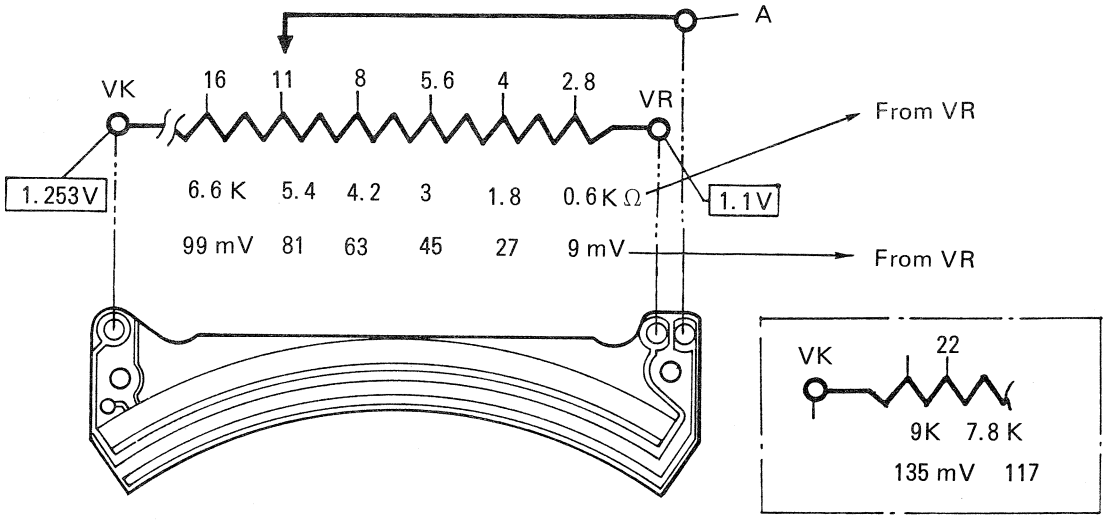

A. LED does not change when aperture ring is turned. (80 m/F 2.8 LENS' and F. HOLDER into THE CAMERA BODY)

1) VK pin - Contact efficiency

2) PC board - Defect

Note: VK-VR = 10.2 k

B. LEDs are flashing.

1) VR and VF - Short

2) VF and GRND - Short

C. LEDs are flashing at LT position.

1) VR and GRND - Short

2) VF pin - Contact efficiency

3) Contact brushes - Get out of place

8	DARK SLIDE INFORMATION IS INCORRECT	1/1	69

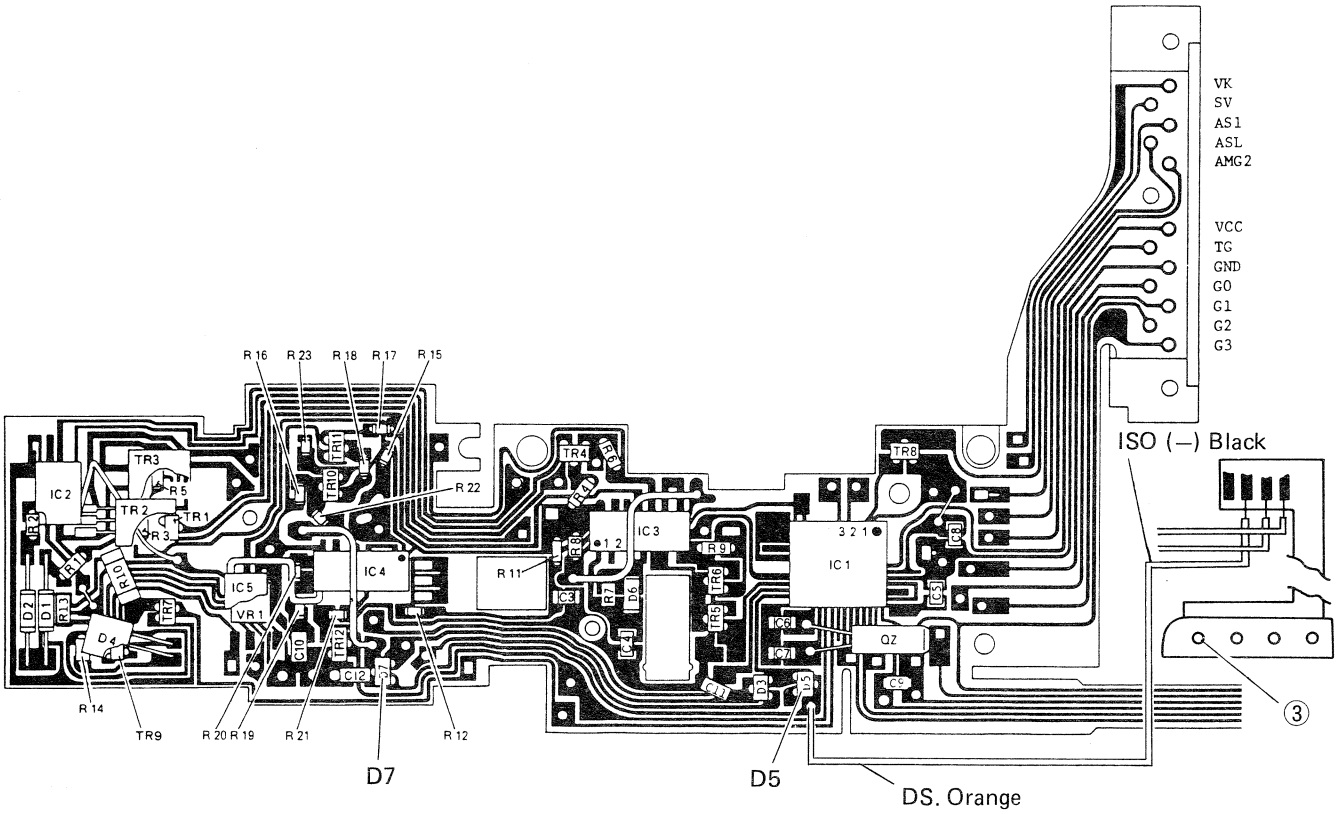

A.	Shutter would be released even if dark slide is inserted. 1) Orange (DS) and black (ISO) leadwires – Cold solder or broken 2) Contact pin – No contact 3) D5 – Cold solder or defect
B.	Depress the shutter button after dark slide is inserted and then remove the dark slide. Shutter will be released without depressing shutter release button. 1) D7 – Cold solder

2-6 OTHERS

1 WIRING DIAGRAM

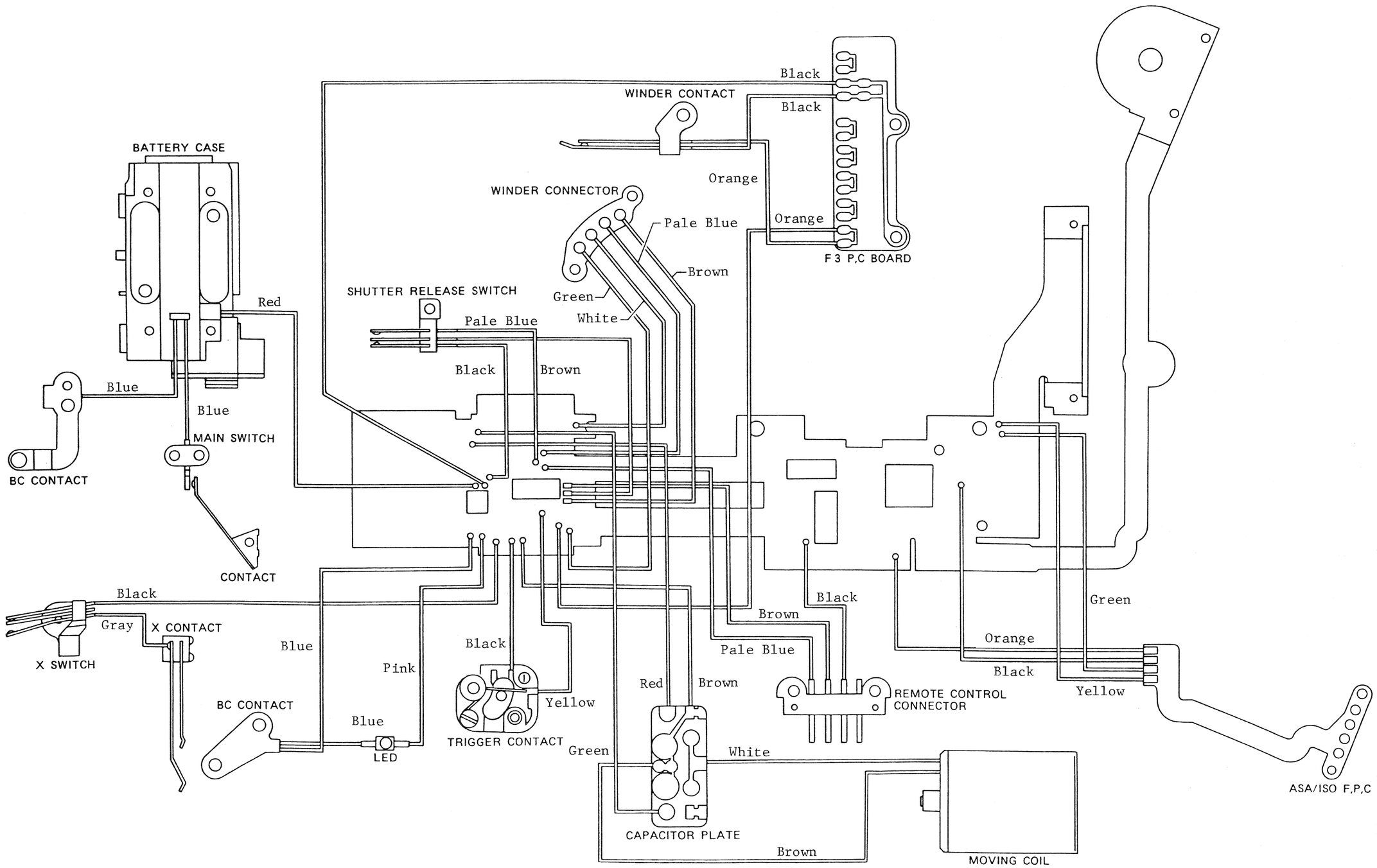

1 WIRING DIAGRAM

Notation	Rating	Notation	Rating	Notation	Rating	Notation	Rating	Notation	Rating
IC 1	MSM5224GS	TR 9	2SC2712GR or 2SC2812	C 1	1000μF 6.3V	R 2	150 Ω	R 15	100K Ω
IC 2	S-81230AG	TR 10	2SA1162GR or 2SA1179	C 2	1000μF 6.3V	R 3	200 Ω	R 16	100K Ω
IC 3	4011	TR 11	2SC2712GR or 2SC2812	C 3	0.47μF 25V	R 4	200 Ω	R 17	100K Ω
IC 4	4011	TR 12	2SC2712GR or 2SC2812	C 4	0.47μF 25V	R 5	1K Ω	R 18	10K Ω
IC 5	S-8054ALR	D 1	OA90A	C 5	0.1μF 35V	R 6	10K Ω	R 19	10K Ω ±5%
TR 1	2SD1246	D 2	OA90A	C 6	30PF 50V	R 7	200K Ω	R 20	100K Ω
TR 2	2SD1246	D 3	DC13015 or 155184	C 7	30PF 50V	R 8	100K Ω	R 21	100K Ω
TR 3	2SC2712GR or 2SC2812	D 4	MA522-Q	C 8	0.1μF 30V	R 9	1K Ω	R 22	100K Ω
TR 4	2SC2712GR or 2SC2812	D 5	155184	C 9	0.1μF 15V	R 10	100K Ω	R 23	100K Ω
TR 5	2SC2712GR or 2SC2812	D 6	MA221	C 10	0.33μF	R 11	300K Ω		
TR 6	2SC2712GR or 2SC2812	D 7	ISS181	C 11	0.1μF 15V	R 12	1K Ω		
TR 7	2SC2712GR or 2SC2812	VR 1	RG4-FAS 10KΩ	C 12	1000PF	R 13	1.5K Ω		
TR 8	2SA1162GR or 2SA1179	QZ	DT-38 32,768KHZ	R 1	150 Ω	R 14	15K Ω		

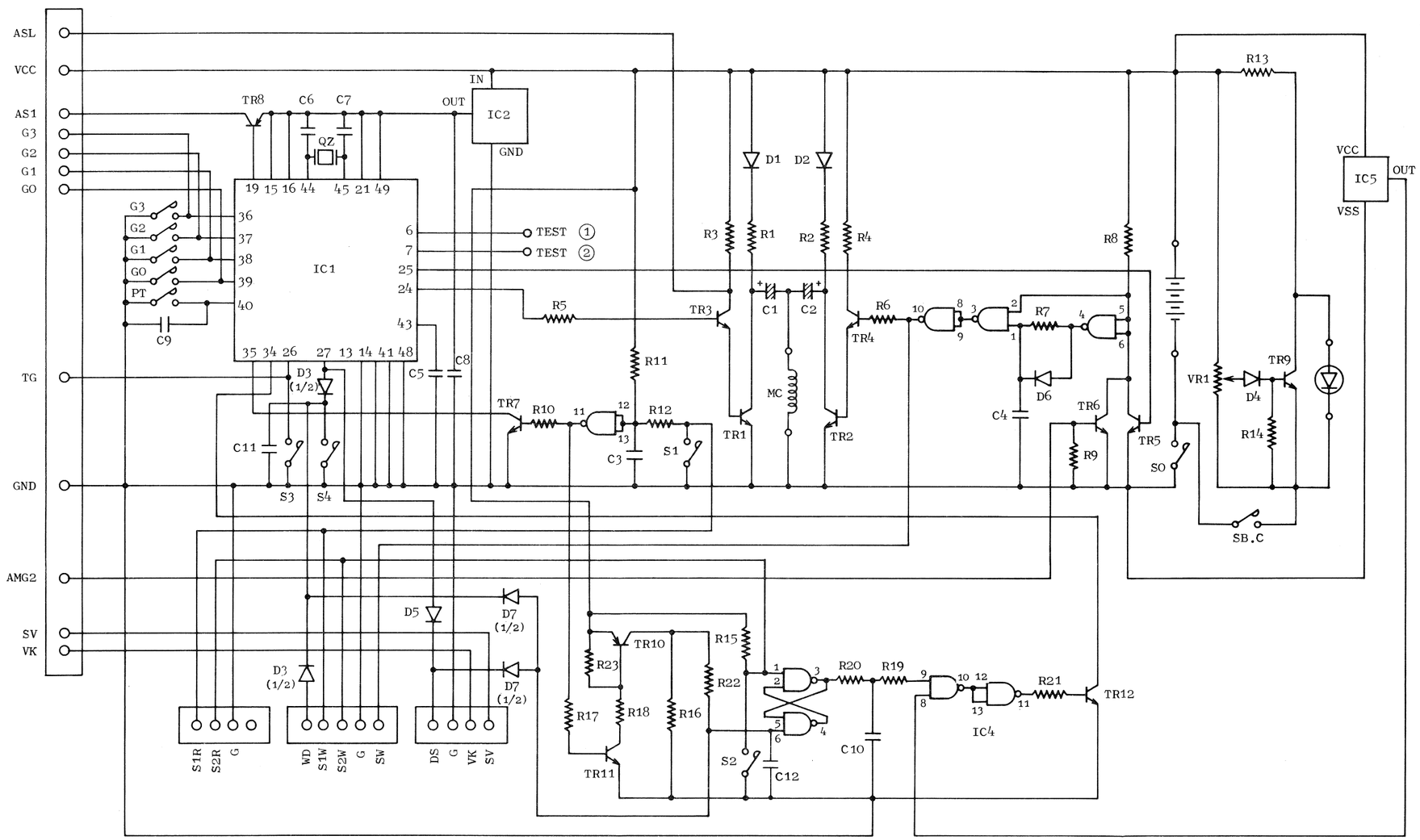

1 WIRING DIAGRAM

Notation	Rating	Notation	Rating
IC 1	MSM5224GS	C 6	30PF 50V
IC 2	S-81230AG	C 7	30PF 50V
IC 3	4011	C 8	0.1μF 30V
IC 4	4011	C 9	0.1μF 15V
IC 5	S-8054ALR	C 10	0.33μF
TR 1	2SD1246	C 11	0.1μF 15V
TR 2	2SD1246	C 12	1000PF
TR 3	2SC2712GR or 2SC2812	R 1	150Ω
TR 4	2SC2712GR or 2SC2812	R 2	150Ω
TR 5	2SC2712GR or 2SC2812	R 3	200Ω
TR 6	2SC2712GR or 2SC2812	R 4	200Ω
TR 7	2SC2712GR or 2SC2812	R 5	1KΩ
TR 8	2SA1162GR or 2SA1179	R 6	10KΩ
TR 9	2SC2712GR or 2SC2812	R 7	200KΩ
TR 10	2SA1162GR or 2SA1179	R 8	100KΩ
TR 11	2SC2712GR or 2SC2812	R 9	1KΩ
TR 12	2SC2712GR or 2SC2812	R 10	100KΩ
D 1	OA90A	R 11	300KΩ
D 2	OA90A	R 12	1KΩ
D 3	DC13015 or 155184	R 13	1.5KΩ
D 4	MA522-Q	R 14	15KΩ
D 5	155184	R 15	100KΩ
D 6	MA221	R 16	100KΩ
D 7	ISS181	R 17	100KΩ
VR 1	RG4-FAS 10KΩ	R 18	10KΩ
QZ	DT-38 32,768KHZ	R 19	10KΩ ±5%
C 1	1000μF 6.3V	R 20	100KΩ
C 2	1000μF 6.3V	R 21	100KΩ
C 3	0.47μF 25V	R 22	100KΩ
C 4	0.47μF 25V	R 23	100KΩ
C 5	0.1μF 35V		

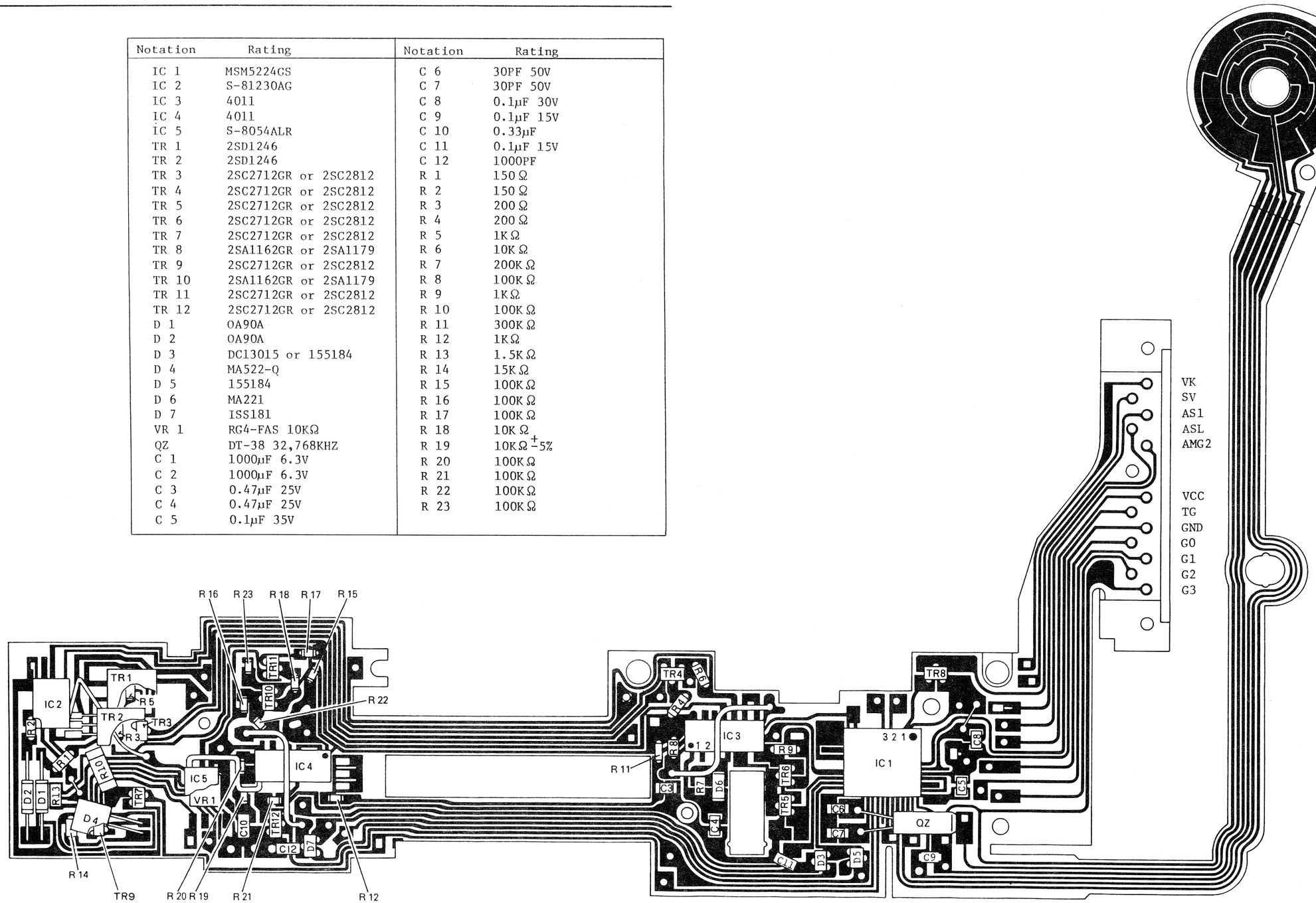

1 SPECIAL INSTRUMENT AND HAND TOOL

Tool No.	Description	Sketch	Use of Portion
SLA-01	NECK STRAP LUG Spanner	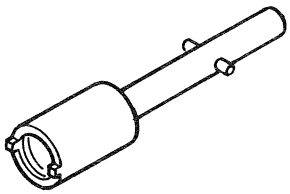	For Dis/Re ass'y of Neck Strap Lug Parts No. (620011441 620011521)
SLA-02	CUPPLER PLATE DRIVE	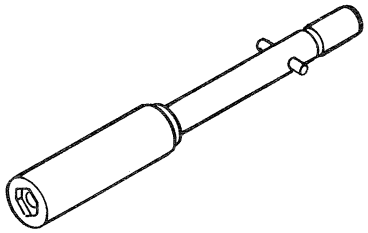	For Dis/Re ass'y of Cuppler Plate Screw Parts No. (620014451)
SLA-03	WIND-UP CRANK	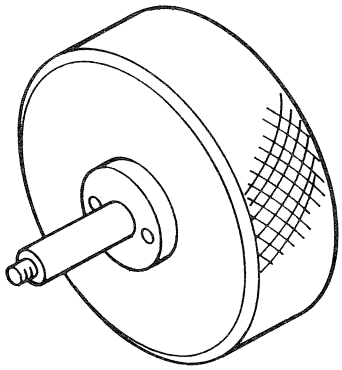	For Adjsting Curtion Portion Parts No. (620018001)
SLA-07	BRAKE NUT ADJUSTMENT SPANNER	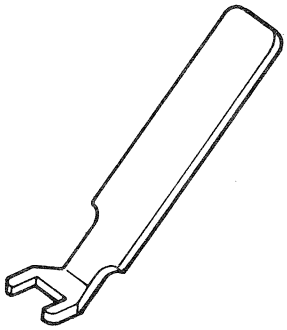	For Adjsting Brake

Tool No.	Description	Sketch	Use of Portion
U-54	STOP RING PLIER	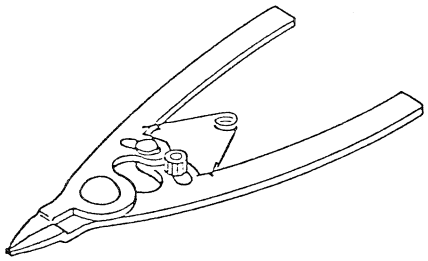	For Dis/Re ass'y of GS1.5 and 2.0 Ring
U-56	SENSOR For MULTIPLE SHUTTER TESTER	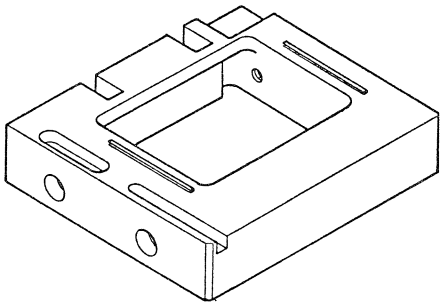	For Attachment Multi Tester

3. ROLL FILM HOLDER

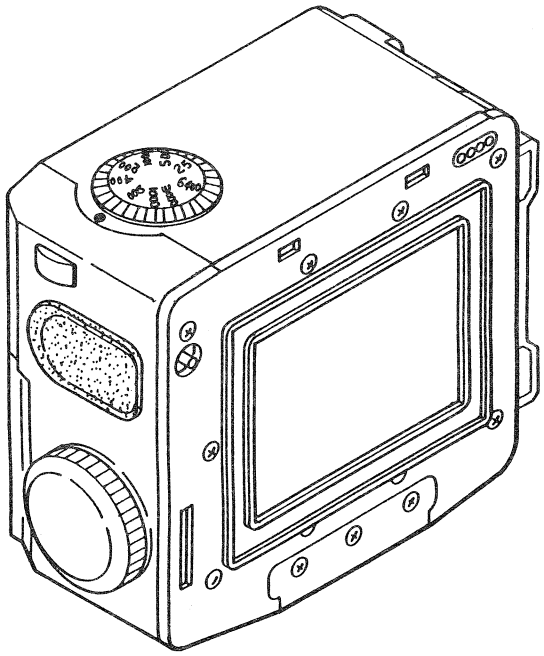

3-1 OUTLINE OF MECANISM

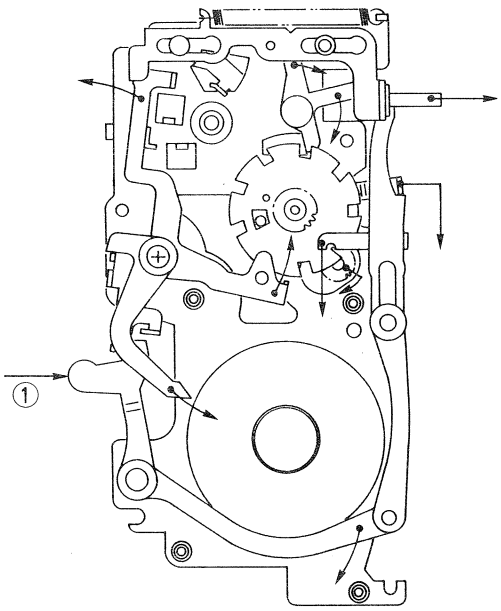

Fig. 79

A. FILM ADVANCE

1. When the film is loaded and the back cover is closed, ① is pushed (Fig. 79) and each lever is actuated in the arrow direction for setting.

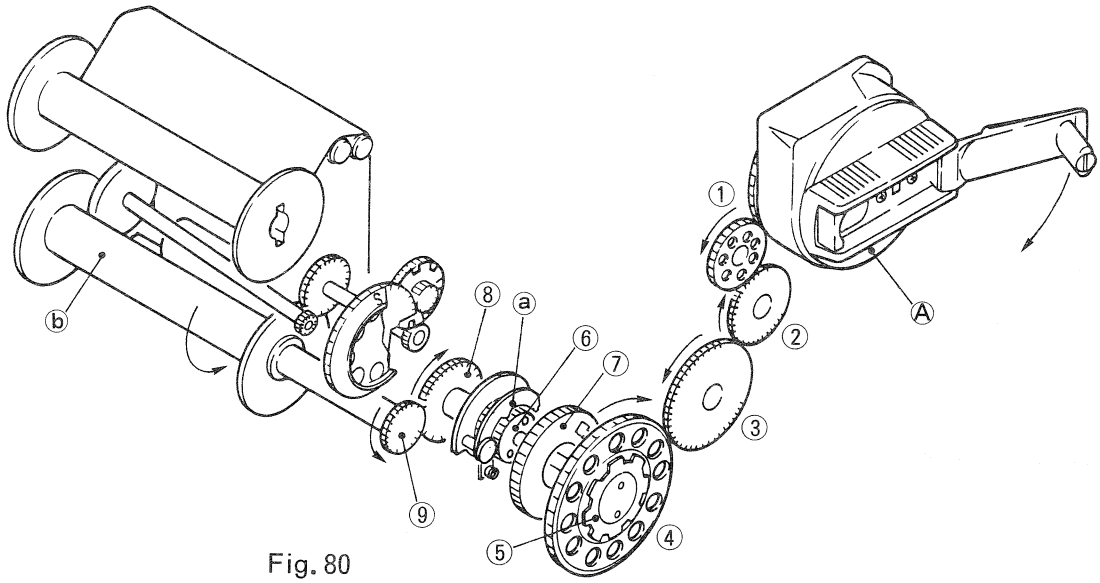

Fig. 80

2. When film advance crank Ⓐ (Fig. 80) or film advance knob (F. holder side) is would up, it is in mesh with ① ② ③ and holder side friction gear ④, rotating in the arrow direction. Then, ratchet gear ⑥ coupled direct to friction plate ⑥ which maintains friction with ④ and rotates is engaged with clutch ⓐ within clutch wheel ⑦, transmitting the rotation to ⑦ and ⑧, whereby the spool gear of film insert ⑨ rotates counterclockwise, and take-up spool ⓑ rotates, thus advancing the film.

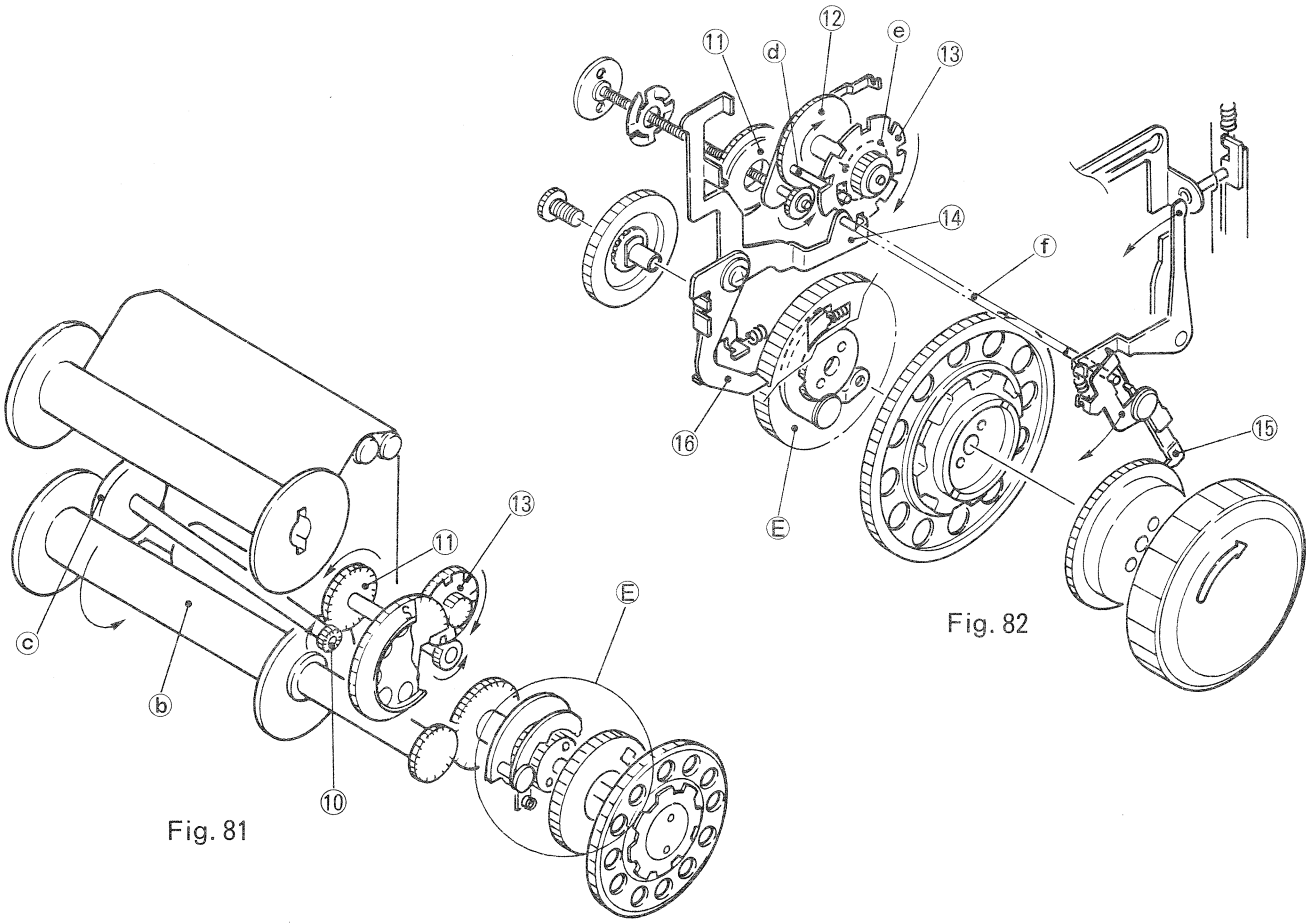

Fig. 81

Fig. 82

3. The friction wheel ⓒ (Fig. 81) contacts the film leader paper wound around ⓑ and rotates in the arrow direction, then detects the film advance length. At the same time, coaxial gear ⑩ rotates gears ⑪ ⑫ (Fig. 82), thus rotating dividing device ⑬ via pin ⓓ coupled direct to ⑫. When the film is further advanced, the tip of lever ⑭ jumps into the slit of dividing device. At the same time, the pin ⓕ pushes down lever ⑮, whereby a claw is engaged with the film advance knob stop gear, stopping the film advance knob winding. On the other hand, the tip ⑯ is engaged with clutch wheel tooth Ⓔ, and the clutch is disengaged, stopping the film advancing.

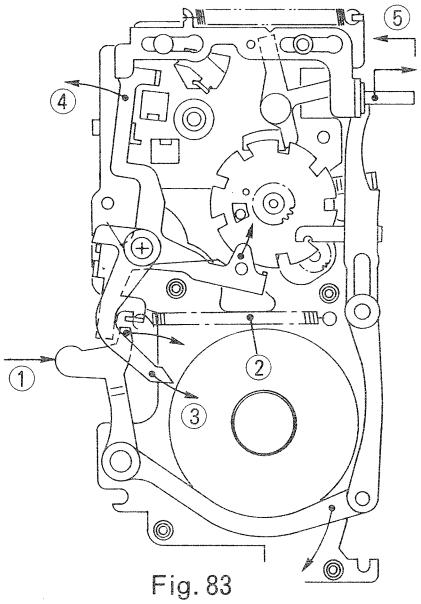

Fig. 83

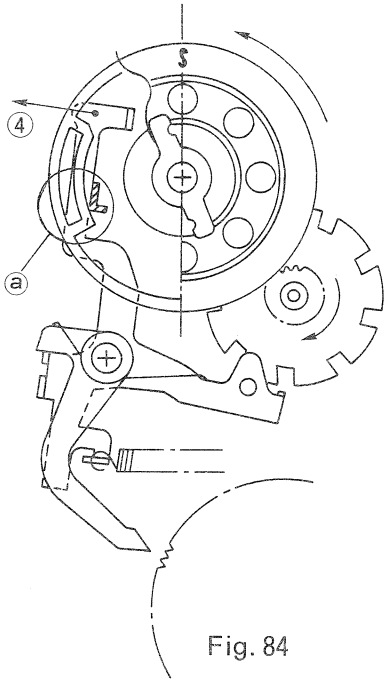

Fig. 84

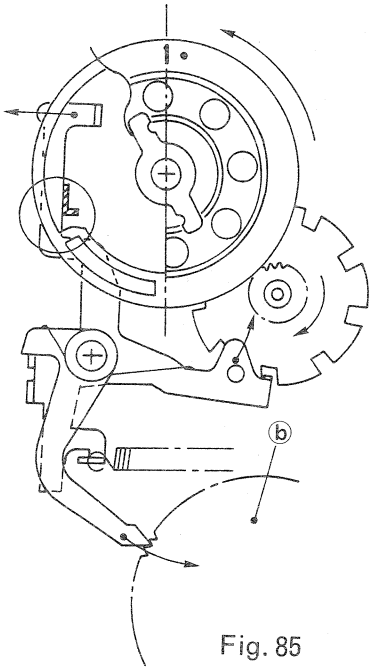

Fig. 85

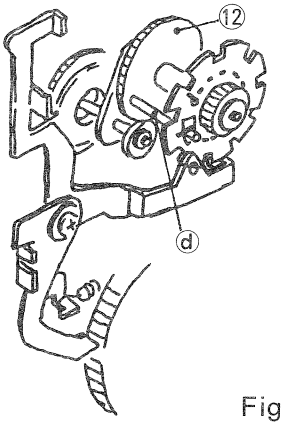

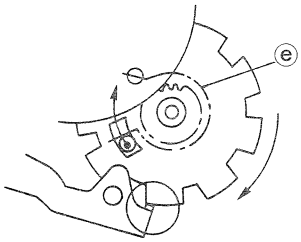

Fig. 86

B. ONE-FRAME ADVANCE AND EXPOSURE COUNTER OPERATION

1. When a film is loaded and the back cover is closed, (1) is pushed (Fig. 83) and (3) (4) (5) operate in the arrow direction by means of (2) spring action, whereby the pin (5) transmits information before wind-up to the camera body.

2. When the exposure counter disk rotates, the movement of lever (4) is restricted by the protrusion (a) (Fig. 84) of counter disk, and lever (4) (Fig. 85) is disengaged by the restriction of protrusion before the counter disk No. is 1, then the tip of (4) hits against the top of dividing device (Fig. 86), and when the film is advanced, the dividing device attempts to rotate, but the rotation of dividing device is restricted according to the friction of tip (4), and the pin (d) of gear (12) charges spring (e), rotating the dividing device. When Exposure Counter No. is 1, the tip of (4) jumps into the slit, whereby the signal pin (5) is returned to the holder side, transmitting the completion of wind-up at the holder side.

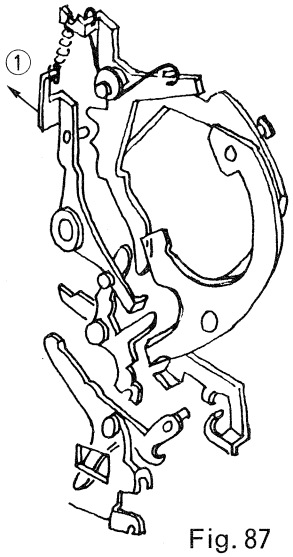

Fig. 87

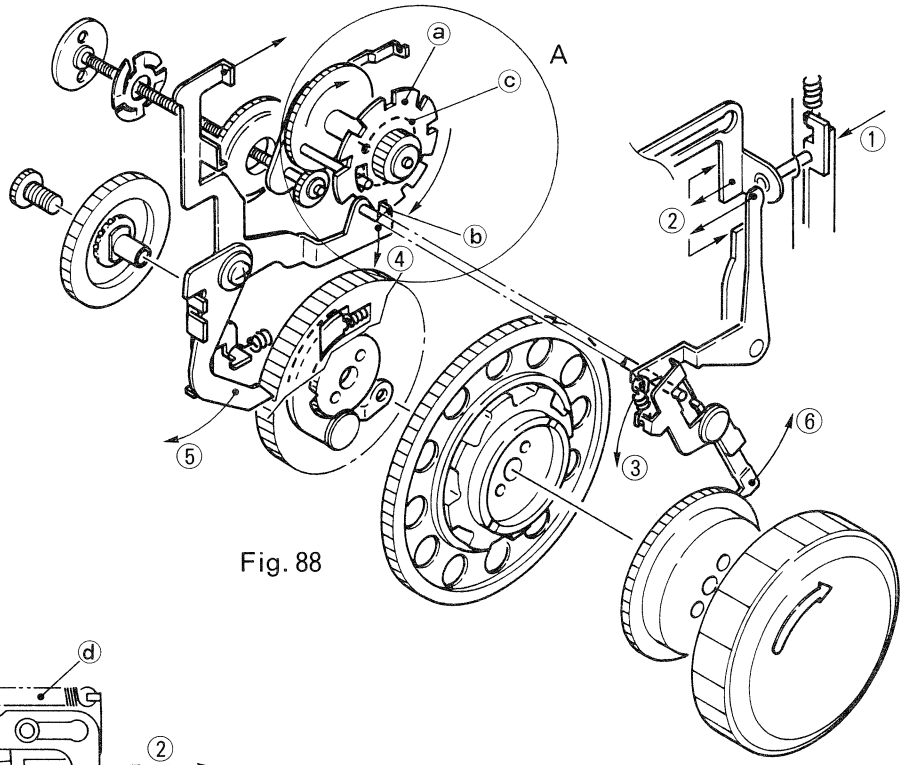

Fig. 88

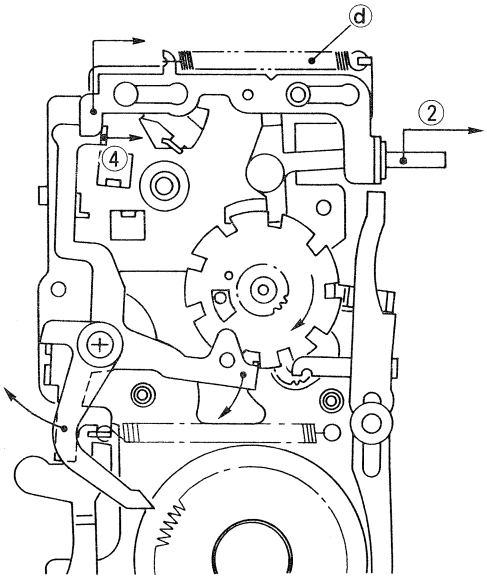

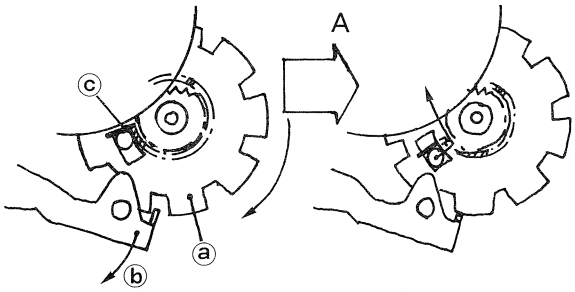

Fig. 89

3. When the shutter is released, the camera body side ① (Fig. 87) pushes signal pin ② at the holder side(Fig. 88), and ③ ④ ⑤ ⑥ are moved in the arrow direction, whereby the tip ⓑ is disengaged by ⓐ dividing device slit, and at the same time, the dividing device ⓐ moves in the clockwise direction by means of ⓒ spring action, ready for the next film advance. (Fig. A) On the other hand, for signal pin ② (Fig. 89), the lever ④ is actuated, thus operating spring ⓓ, whereby the holder side wind-up stop release is transmitted to the camera body side.

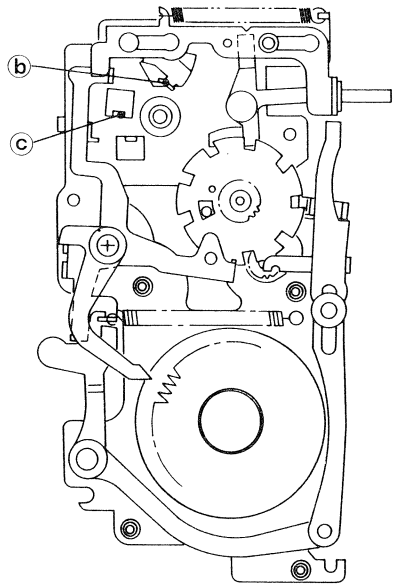

Fig. 90

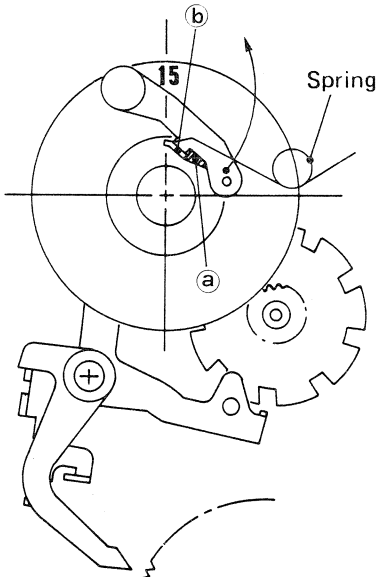

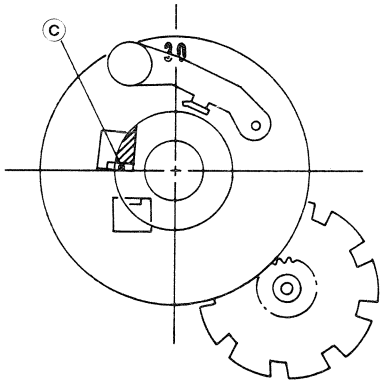

Fig. 92

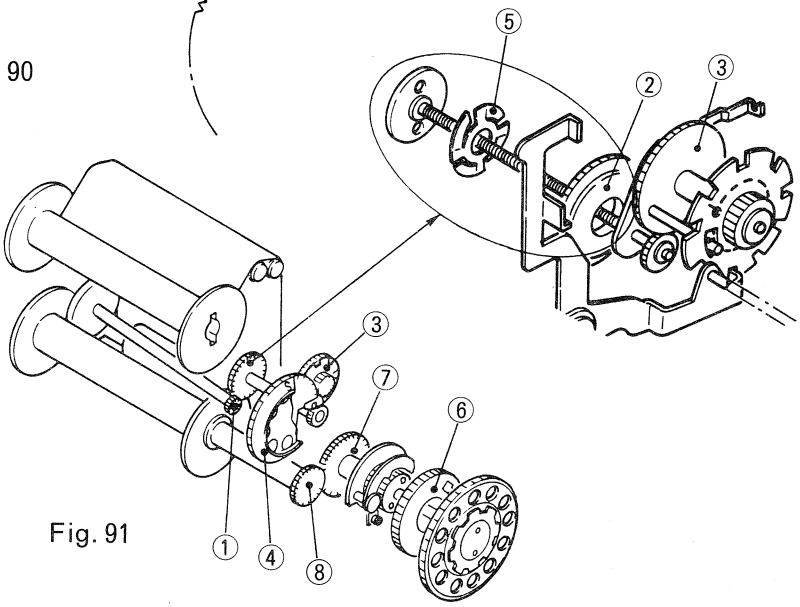

Fig. 91

C. 15TH EXPOSURE OF FILM/STOP AT 30TH EXPOSURE

1. When the 15th exposure is completed, and the 16th frame is advanced, the protrusion of exposure counter disk ⓐ (Fig. 90) hits against part ⓑ, thus stopping the exposure counter disk rotation, and when the film is further advanced, with ② and ③ which are engaged with friction gear ① (Fig. 91), exposure counter disk ④ is stopped, so that friction spring ⑤ is actuated, and gear ② rotates, while slipping, then the film leader paper is wound up by ⑥ ⑦ ⑧, but no exposure counter disk advances.

2. When 220 film insert is used, lever ⓑ is disengaged in the arrow direction (Fig. 90) and the protrusion of exposure counter disk is stopped at part ⓒ (Fig. 92).

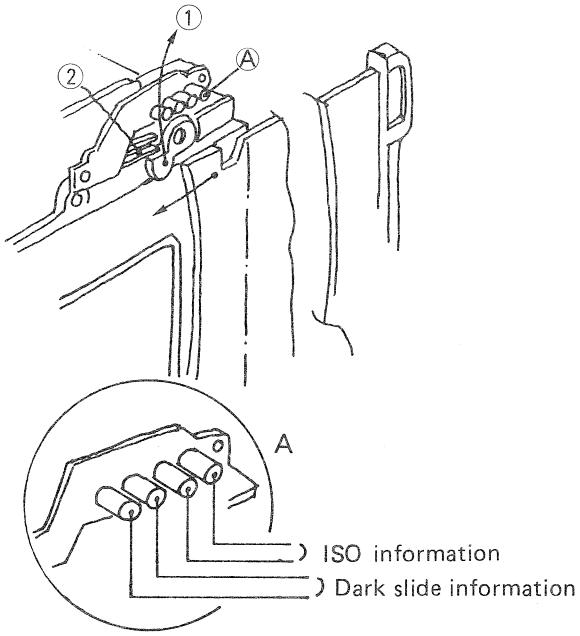

Fig. 93

When the holder is installed on the camera body, and dark slide is inserted, lever (1) pushes contact (2), turning it ON. Even when the shutter release button is depressed in this rate, release signal does not appear and MC is not actuated, whereby shutter cannot be released.

3-2 DISASSEMBLY AND REASSMBLY

1 DISASSEMBLING AND REASSEMBLING F. HOLDER

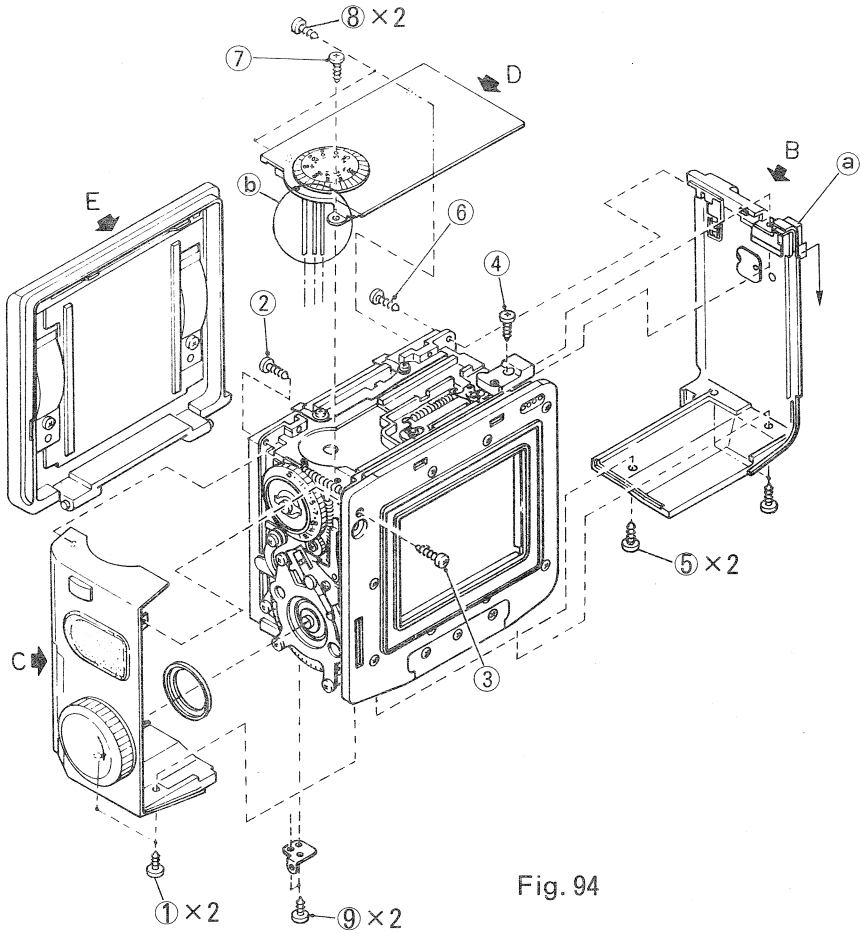

Fig. 94

A. DISASSEMBLY

Disassemble F. holder in the numerical order as illustrated in Fig. 94 below.

1. The right/left side plates, top cover and front cover can be removed individually.

   Notes: Right side plate: Unscrew screws ④ ⑤ ⑥, and remove this board while pushing release knob ⓐ in the direction of the arrow.

   Top cover D: Undo screws ⑦ ⑧ and push the cover up a little to peel off adhesives on ISO/ASA lead wires bonded to the main body. Remove top cover Ⓓ carefully in slackening leadwires.

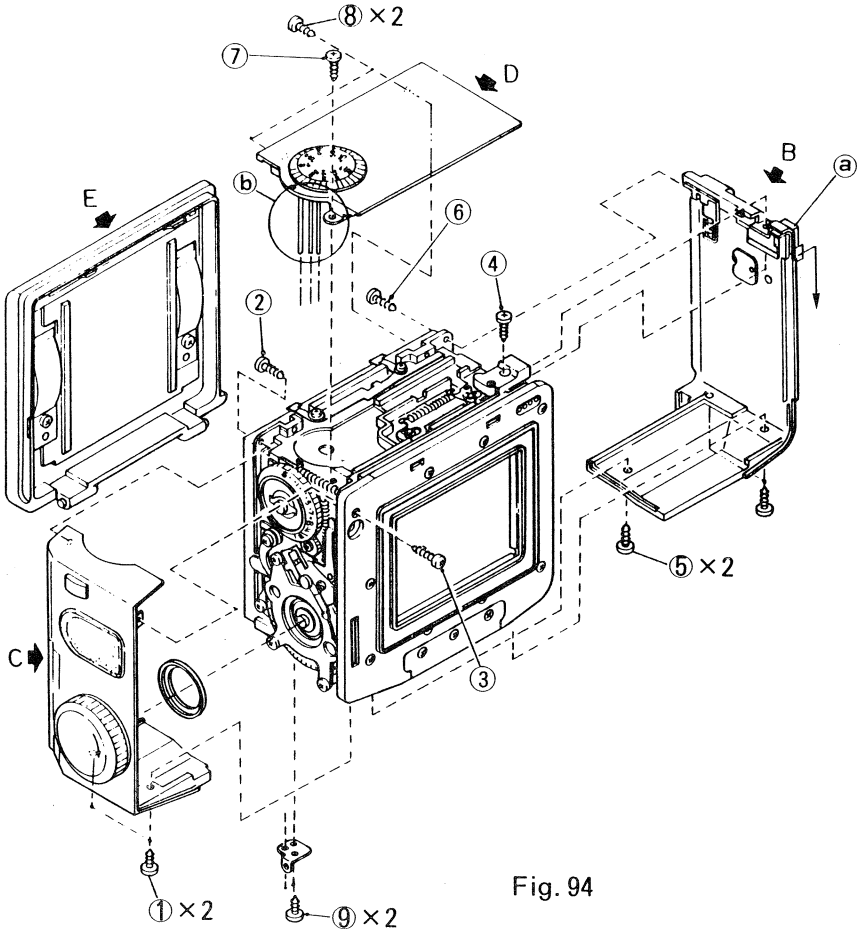

Fig. 94

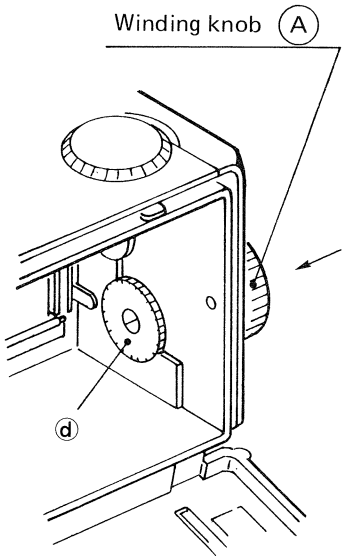

Fig. 95

B. REASSEMBLY

1. For reassembly, reverse the disassembly procedure described.
2. Left side plate C:
   - I. Hold the F6 gear ⓓ with left hand. (Fig. 94)
   - II. Push the film advance knob in direction of the arrow with right hand and then turn the knob clockwise.
   - III. Check following two points
     - a) Operation of hook on rear face of film advance knob and F-clutch.
     - b) Rotation of F6 gear.

2 DIS/REASSEMBLING WINDING BASE PLATE UNIT

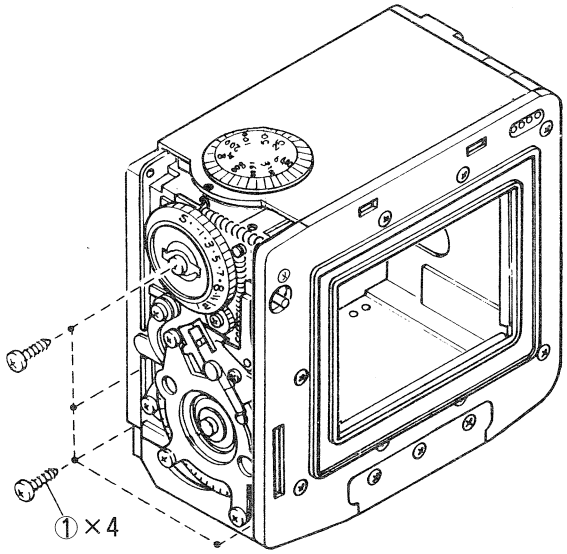

Fig. 96

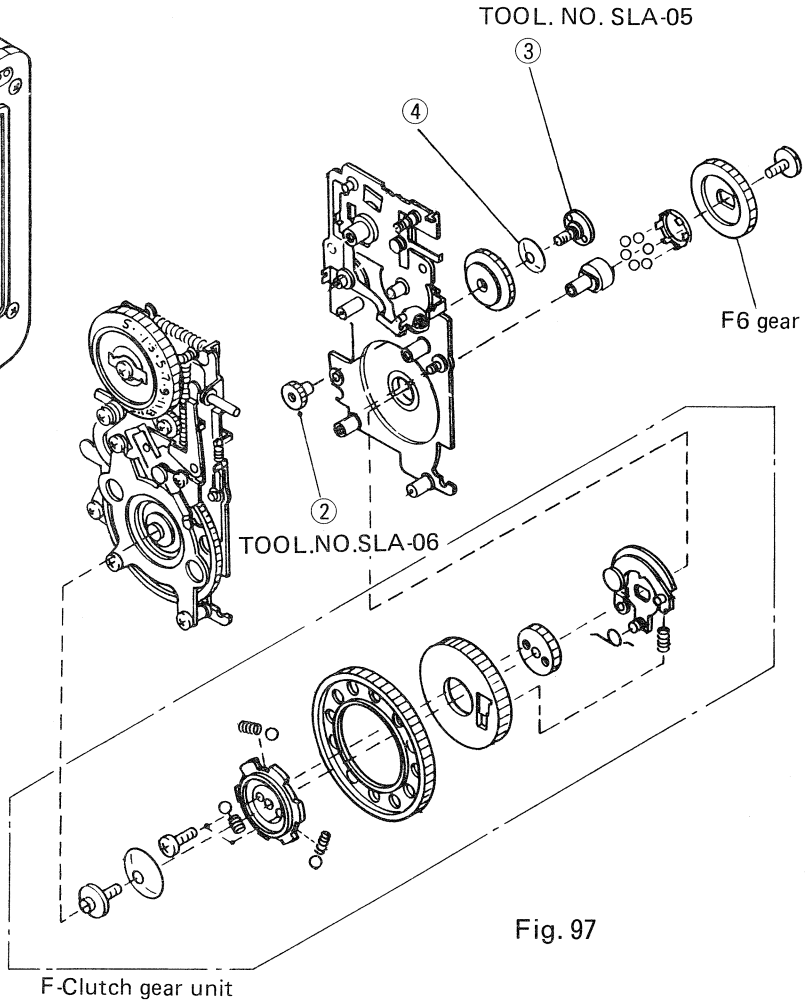

Fig. 97

For other disassembly and reassembly than described here, refer to the exploded view in Parts Catalog as a rule.

A. DISASSEMBLY

Disassemble this unit in the numerical order illustrated above. When removing ② and ③, however, use special tools (Tool No. SLA-06 for ②, No. SLA-05 for ③). (Fig. 96)

B. REASSEMBLY

1. For reassembly, reverse the disassembly procedure described above.
2. To make easy assembly of F-clutch gear unit first set the film insert into the RFH to prevent the drop of the F6 gear. (Fig. 97)

   Note: The strength of spring ④ should be 100 to 120 gr. If the spring pressure is high, noise will occur when the 16th frame or 31st frame and subsequent frames are advanced.

3-3 ADJUSTMENT

1	ADJUSTMENT OF FILM START POSITION	1/1	84

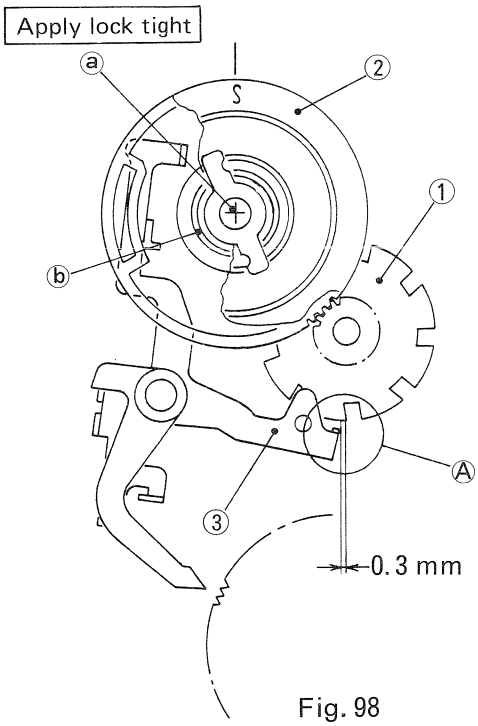

Fig. 98

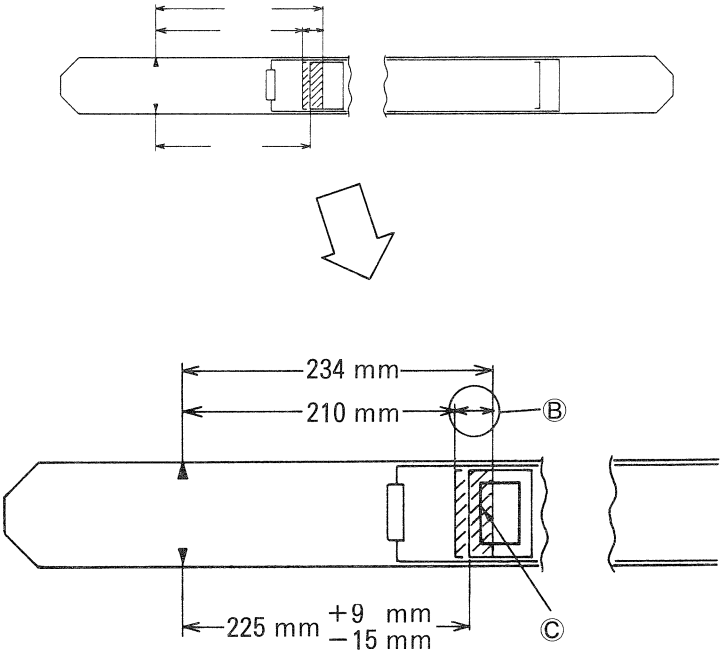

Fig. 99

3-12 ADUSTMENT OF FILM START POSITION

ADJUSTMENT

1. Install the 120 type Insert into Roll film holder (RFH) and close the back cover.
2. Remove screw (a) and disengage both gears of the dividing plate (1) and film counter disk. (Fig. 98)
3. Engage exposure counter disk gear (2) with the dividing plate gear (1) as dividing lever (3) gets in position (A) with dividing plate (1).
4. Rotate spring (b) one and half turn and tighten screw (a).

CHECK

1. Mark the allowable range on the film by a hall point pen (Fig. 99) and load the film into the Insert and attach the RFH with film loaded to camera body.
2. Advance the film by winding wind-up crank at B position of shutter speed dial until figure 1 appears in the exposure counter window.
3. Depress shutter release button to release 1st curtain only and check as follows:
   a) (C) lower line of RFH frame should be in the allowable range marked on the film. (While depressing shutter release button at bulb, mark the picture frame on the film by a ball point pen: This is easier to see.)
4. If it is out of the allowable range, repeat above steps 1 to 3.
5. Apply screw-lock tight to the screw (a) after adjustment

3-4 OTHERS

1 SPECIAL INSTRUMENT AND HAND TOOL 1/1 85

Tool No.	Description	Sketch	Use of Portion
SLA−05	C−1 GEAR SCREW WRENCH	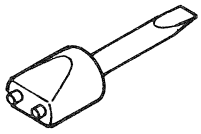	For Dis/Re ass'y C1 GEAR of SCREW Parts No. (627043181)
SLA−06	C−2 GEAR WRENCH	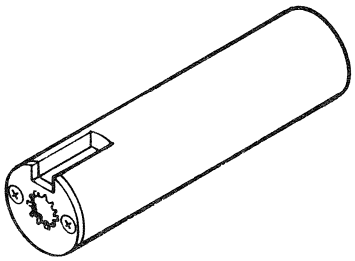	For Dia/Re ass'y of C−2 GEAR Parts No. (627043171)

Mamiya

PARTS CATALOG

M645 SUPER

Camera Body
Wind-up Crank N

PC85-M645S-101

Camera Body

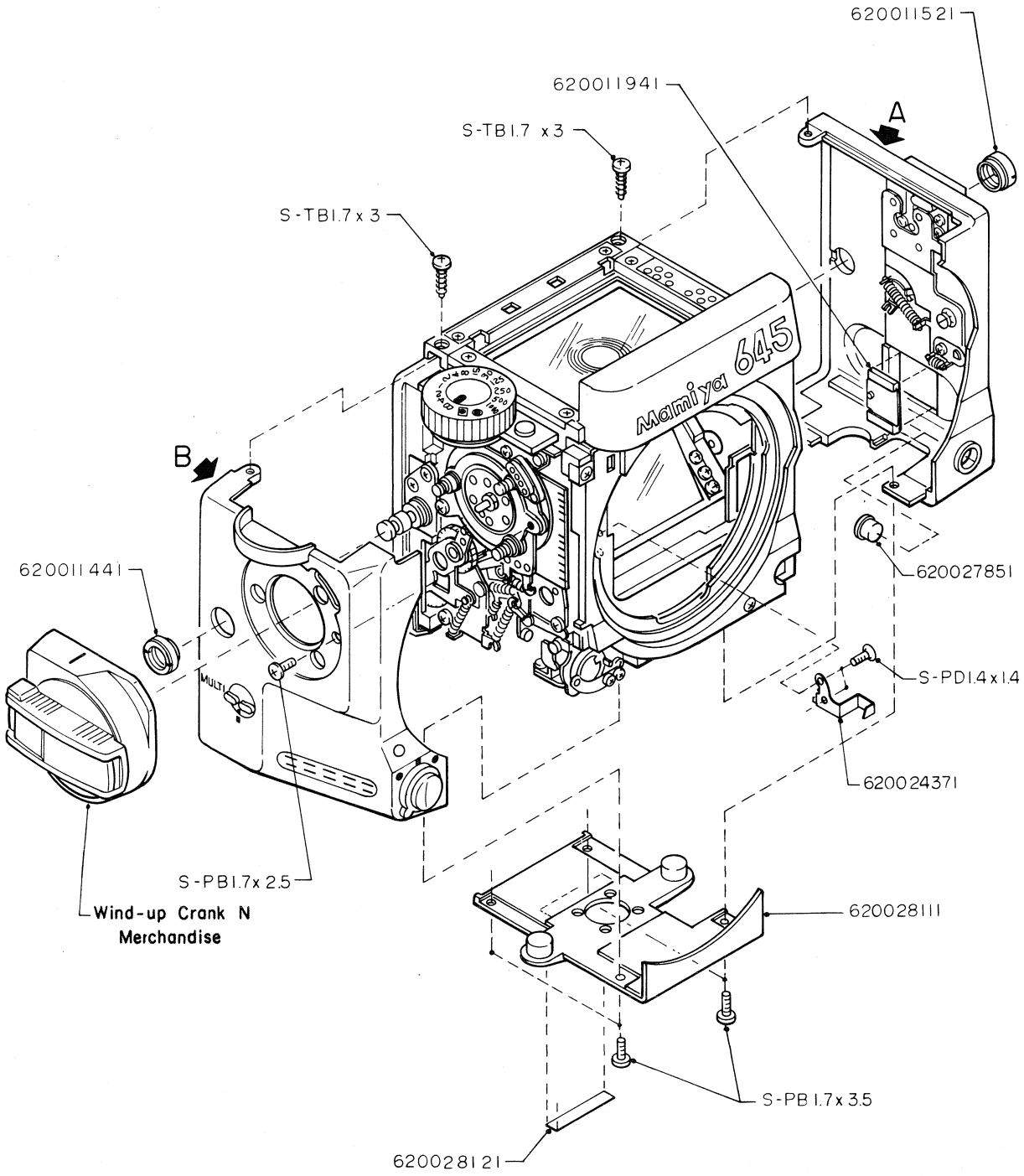
620011521
620011941
S-TB1.7 x3
A
S-TB1.7x3
Mamiya 645
B
620011441
620027851
S-PD1.4x1.4
620024371
S-PB1.7x2.5
Wind-up Crank N
Merchandise
620028111
S-PB1.7x3.5
620028121

PARTS LIST

Parts No.	QTY.	Description	部品名称
620011441	1	Nut	左金具ナット
620011521	1	Nut	吊金具ナット
620011941	1	RC cover	RC 蓋
620024371	1	Aperture coupling lever	絞り込みレバー
620027851	1	BC button	BC ボタン
620028111	1	Botton cover	下カバー
620028121	1	Number plate	No. プレート
S-PB1.7×2.5	1	Screw	左カバー止ネジ
S-PB1.7×3.5	4	Screw	下カバー止ネジ
S-TB1.7×3	1	Screw	左カバー止ネジ
S-TB1.7×3	1	Screw	右カバー止ネジ
S-PD1.4×1.4	2	Screw	絞り込みレバー止ネジ

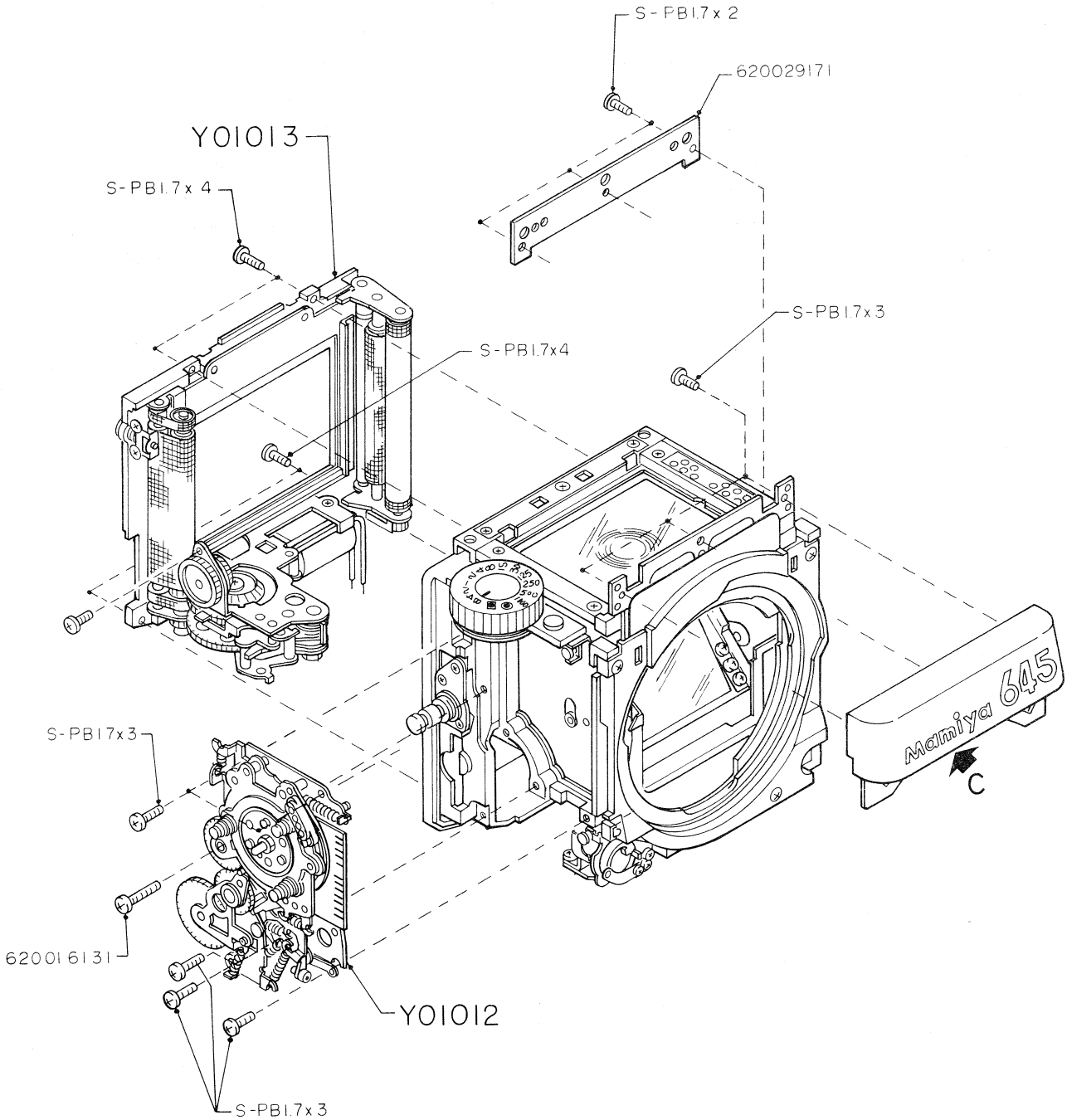
S-PB1.7x2
620029171
Y01013
S-PB1.7x4
S-PB1.7x4
S-PB1.7x3
S-PB1.7x3
620016131
Y01012
S-PB1.7x3
Mamiya 645
C

PARTS LIST

Parts No.	QTY.	Description	部品名称
620016131	1	Screw	巻上げ基盤 F2止ネジ
620029171	1	Frame plate	ネーム枠カバー
Y01012	1	Winding mechanism Ass'y	巻上げAss'y
Y01013	1	Shutter Ass'y	シャッターAss'y
S-PB1.7×2	3	Screw	ネーム枠カバー止ネジ
S-PB1.7×3	5	Screw	M基盤止ネジ
S-PB1.7×3	3	Screw	ネーム枠基盤止ネジ
S-PB1.7×4	5	Screw	シャッター基盤止ネジ

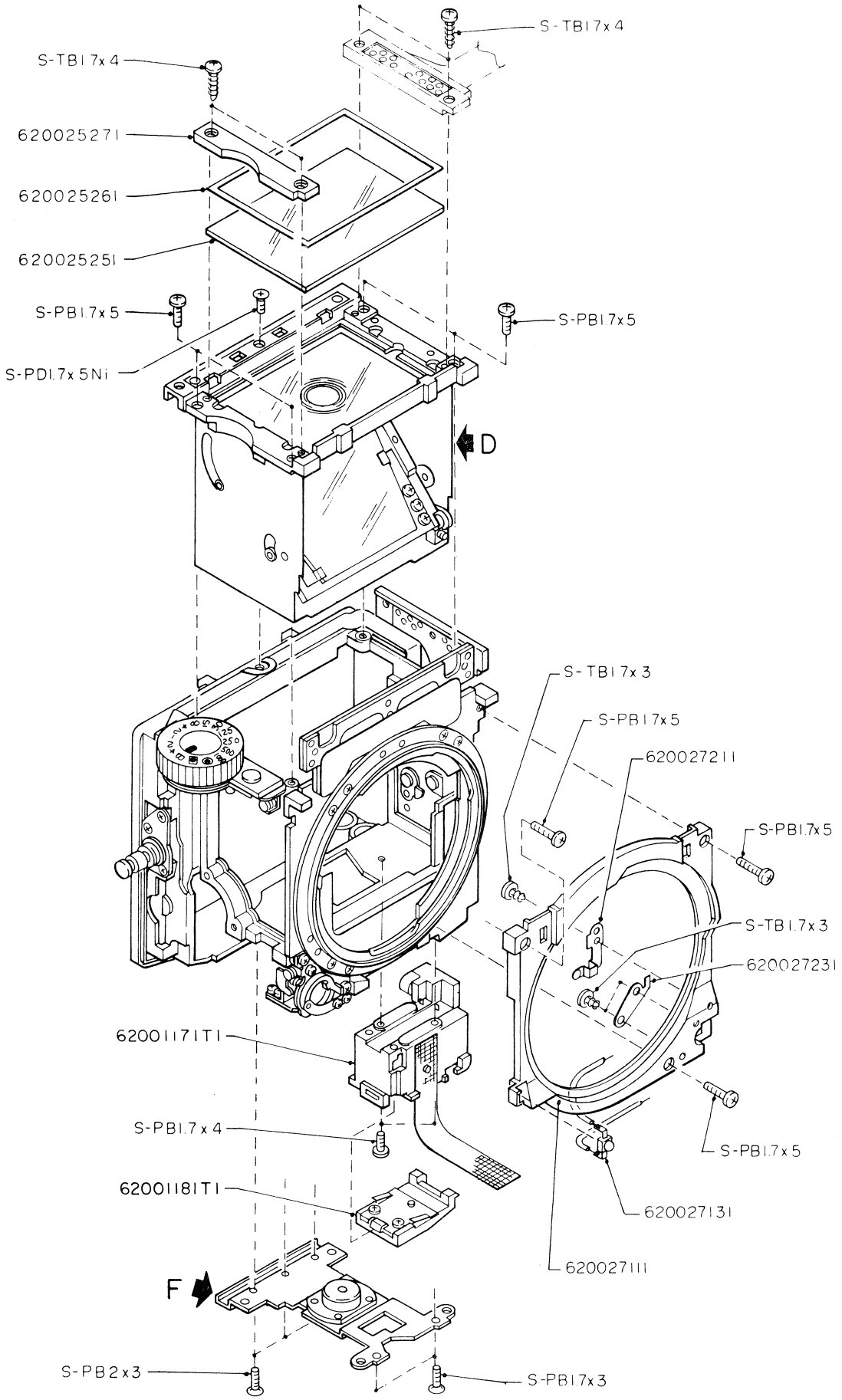
S-TB1.7x4
S-TB1.7x4
620025271
620025261
620025251
S-PB1.7x5
S-PB1.7x5
S-PD1.7x5Ni
D
S-TB1.7x3
S-PB1.7x5
620027211
S-PB1.7x5
S-TB1.7x3
620027231
62001171T1
S-PB1.7x4
S-PB1.7x5
62001181T1
620027131
620027111
F
S-PB2x3
S-PB1.7x3

PARTS LIST

Parts No.	QTY.	Description	部品名称
62001171T1	1	Battery case Ass'y	電池ケースAss'y
62001181T1	1	Battery chamber Ass'y	電池フタAss'y
620025251	1	Protecting glase	フレネル保護板
620025261	1	Frame	フレネル保護板枠
620025271	1	Fitting plate	フレネル保護板押え
620027111	1	Front cover	前カバー
620027131	1	Front cover LED	前カバー LED
620027211	1	BC contact	BC 可動片
620027231	1	BC contact	BC 固定片
S-PB1.7×3	2	Screw	下基板止ネジ
S-PB1.7×4	2	Screw	電池ケース止ネジ
S-PB1.7×5	4	Screw	MB台枠止ネジ
S-PB1.7×5	3	Screw	前カバー止ネジ
S-PB2×3	3	Screw	下基板止ネジ
S-TB1.7×3	1	Screw	BC 可動片止ネジ
S-TB1.7×3	2	Screw	BC 固定片止ネジ
S-TB1.7×4	2	Screw	フレネル保護板押え止ネジ
S-TB1.7×4	2	Screw	MB接点台止ネジ
S-PD1.7×5Ni	1	Screw	MB台枠後板止ネジ

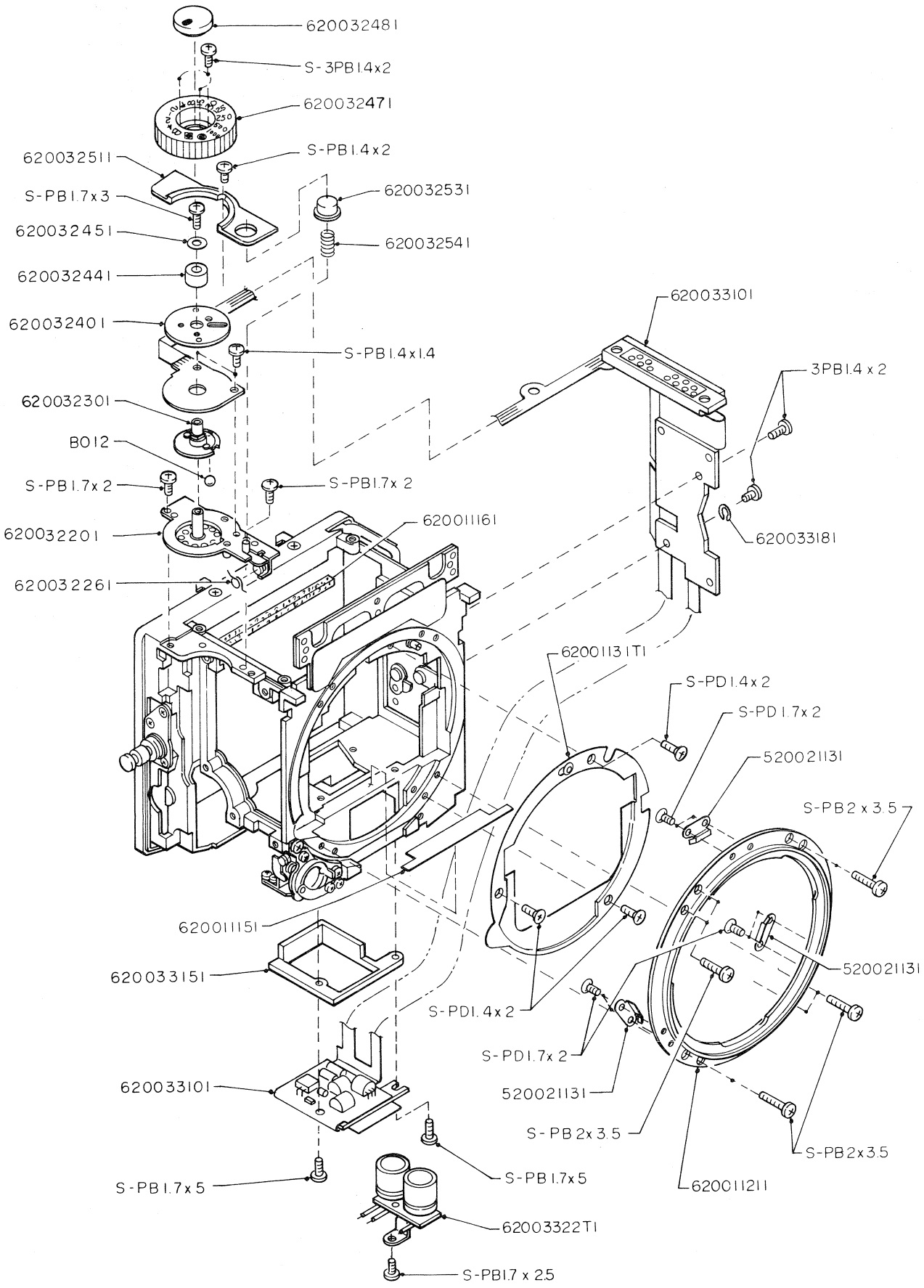
620032481
S-3PB1.4x2
620032471
S-PB1.4x2
620032511
S-PB1.7x3
620032531
620032451
620032541
620032441
620033101
620032401
S-PB1.4x1.4
3PB1.4 x 2
620032301
B012
S-PB1.7x 2
S-PB1.7x 2
620011161
620032201
620033181
620032261
6200113 1T1
S-PD1.4x 2
S-PD 1.7x 2
520021131
S-PB2 x 3.5
620011151
620033151
520021131
S-PD1. 4x 2
S-PD1.7x 2
620033101
520021131
S-PB 2x 3.5
S-PB2x3.5
S-PB 1.7x5
S-PB 1.7x5
620011211
62003322T1
S-PB1.7 x 2.5

PARTS LIST

Parts No.	QTY.	Description	部品名称
620011151	1	Sealing paper	Mボディ遮光紙
620011161	1	Sealing moltopren	Mボディ遮光モルト
620011211	1	Bayonet ring	バヨネットリング
62001131T1	1	Shading frame	バヨネ下カバー
620032201	1	TV base plate Ass'y	TV 基板Ass'y
620032261	1	Spring	TV ロック レバー バネ
620032301	1	TV click	TV クリック板
620032401	1	TV brush disk	TV ブラシ
620032441	1	Collar	TV ブラシ基板カラー
620032451	1	Washer	TV ブラシ止板
620032471	1	TV dial	TV ダイヤル
620032481	1	TV indicator plate	TV ダイヤル指標
620032511	1	TV cover	TV部 カバー
620032531	1	TV release button	TV ロック解除ボタン
620032541	1	Spring	TV ロック解除ボタンバネ
620033101	1	F.P.C board	メイン フレキ
620033151	1	MC base plate	MC 回路基板台
620033181	1	C-ring	フレキ座金
62003322T1	1	Capacitor plate Ass'y	コンデンサー基板
520021131	3	Spring	バヨネバネ
S-PB1.4×1.4	2	Screw	TV パターン止ネジ
S-PB1.4×2	1	Screw	TV部 カバー止ネジ
S-3PB1.4×2	3	Screw	TV ダイヤル止ネジ
S-3PB1.4×2	2	Screw	メインフレキ止ネジ
S-PB1.7×2	2	Screw	TV基板止ネジ
S-PB1.7×2.5	1	Screw	コンデンサー受板止ネジ
S-PB1.7×3	1	Screw	TVブラシ止ネジ
S-PB1.7×5	2	Screw	MC回路基板止ネジ
S-PB2×3.5	8	Screw	バヨネ止ネジ
S-PD1.4×2	3	Screw	バヨネ下カバー止ネジ
S-PD1.7×2	6	Screw	バヨネバネ止ネジ
B012	1	Steel ball(φ1.2)	TVクリックボール

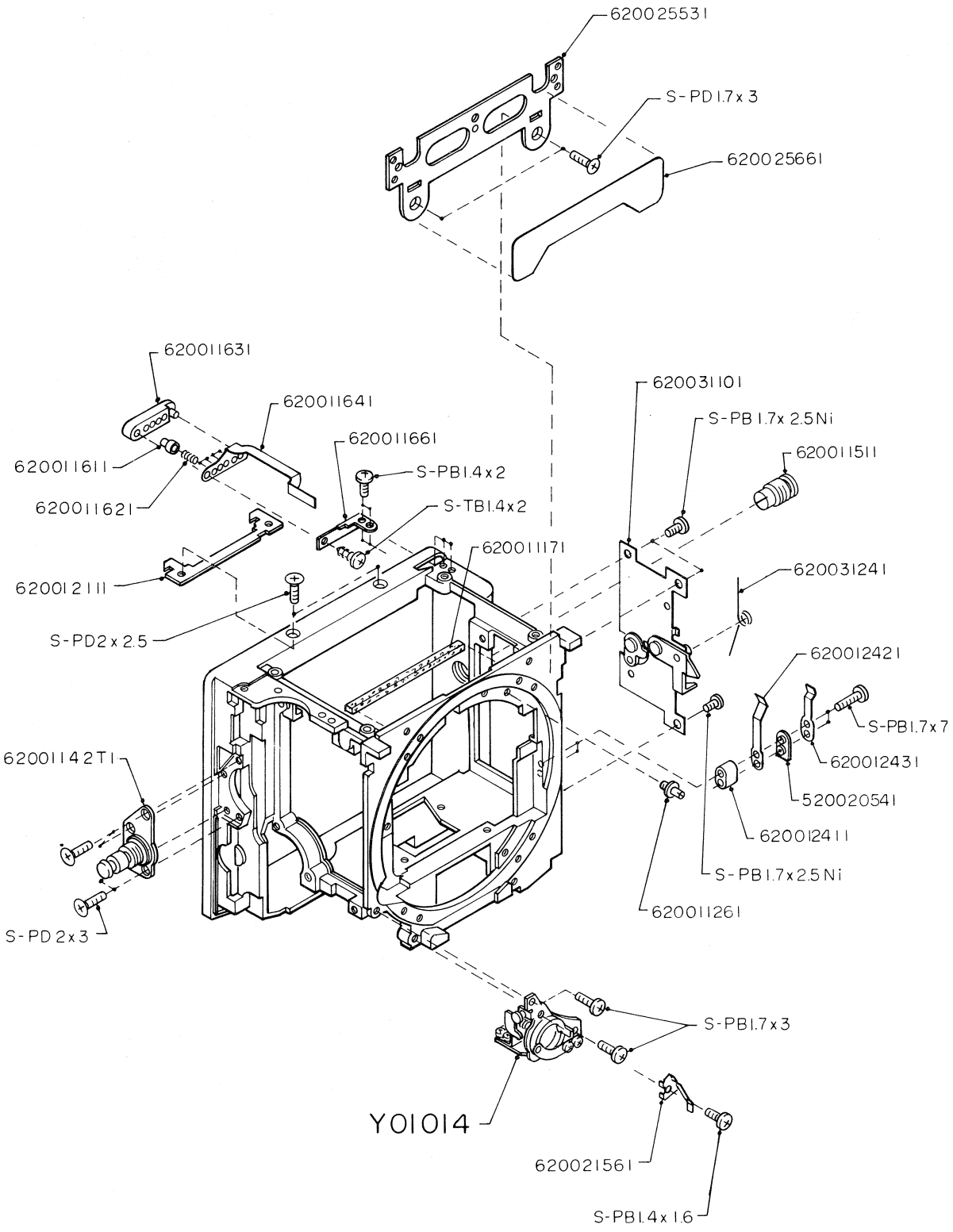
620025531
S-PD1.7x3
620025661
620011631
620011641
620011661
620011611
S-PB1.4x2
620011621
S-TB1.4x2
620011171
620012111
S-PD2x2.5
620031101
S-PB1.7x2.5Ni
620011511
620031241
620012421
S-PB1.7x7
620012431
520020541
620012411
S-PB1.7x2.5Ni
620011261
62001142T1
S-PD2x3
S-PB1.7x3
Y01014
620021561
S-PB1.4x1.6

PARTS LIST

Parts No.	QTY.	Description	部品名称
620011171	1	Sealing moltopren	Hボディ前モルト
620011261	1	Screw	バヨネットリング回転止め
62001142T1	1	Strap lug(L)	左吊金具基板
620011511	1	Strap lug(R)	右吊金具基板
620011611	4	ISO signal pin	ASAピン
620011621	4	Spring	ASAピンバネ
620011631	1	Signal pins housing	ASAピンハウジング
620011641	1	ISO F.P.C.	ASAピンフレキ
620011661	1	Fitting plate	ASAピン止板
620012111	1	R hook plate	Rフック(上)
620012411	1	Insulation plate	X中継台
620012421	1	X contact(＋)	Xプラス中継片
620012431	1	X contact(－)	Xマイナス中継片
620021561	1	RSW contact	RSWバネ接点
620025531	1	MB slate	MB台枠前板
620025661	1	Sealing insulation	絶縁テープ
620031101	1	Right side board Ass'y	右基板Ass'y
620031241	1	Spring	レンズ戻し止レバーバネ
520020541	1	Insulation plate	Xマイナス絶縁台
Y01014	1	SR base Ass'y	SR基板Ass'y
S-PB1.4×1.6	1	Screw	RSWバネ接片止ネジ
S-PB1.4×2	2	Screw	ASAピン止板止ネジ
S-PB1.7×2.5Ni	3	Screw	右基板止ネジ
S-PB1.7×3	2	Screw	SR基板止ネジ
S-PB1.7×7	2	Screw	X 中継片止ネジ
S-PD1.7×3	2	Screw	MB台枠前板止ネジ
S-PD2×2.5	2	Screw	Rフック止ネジ
S-PD2×3	4	Screw	左吊金具止ネジ
S-TB1.4×2	1	Screw	ASAピンハウジング止ネジ

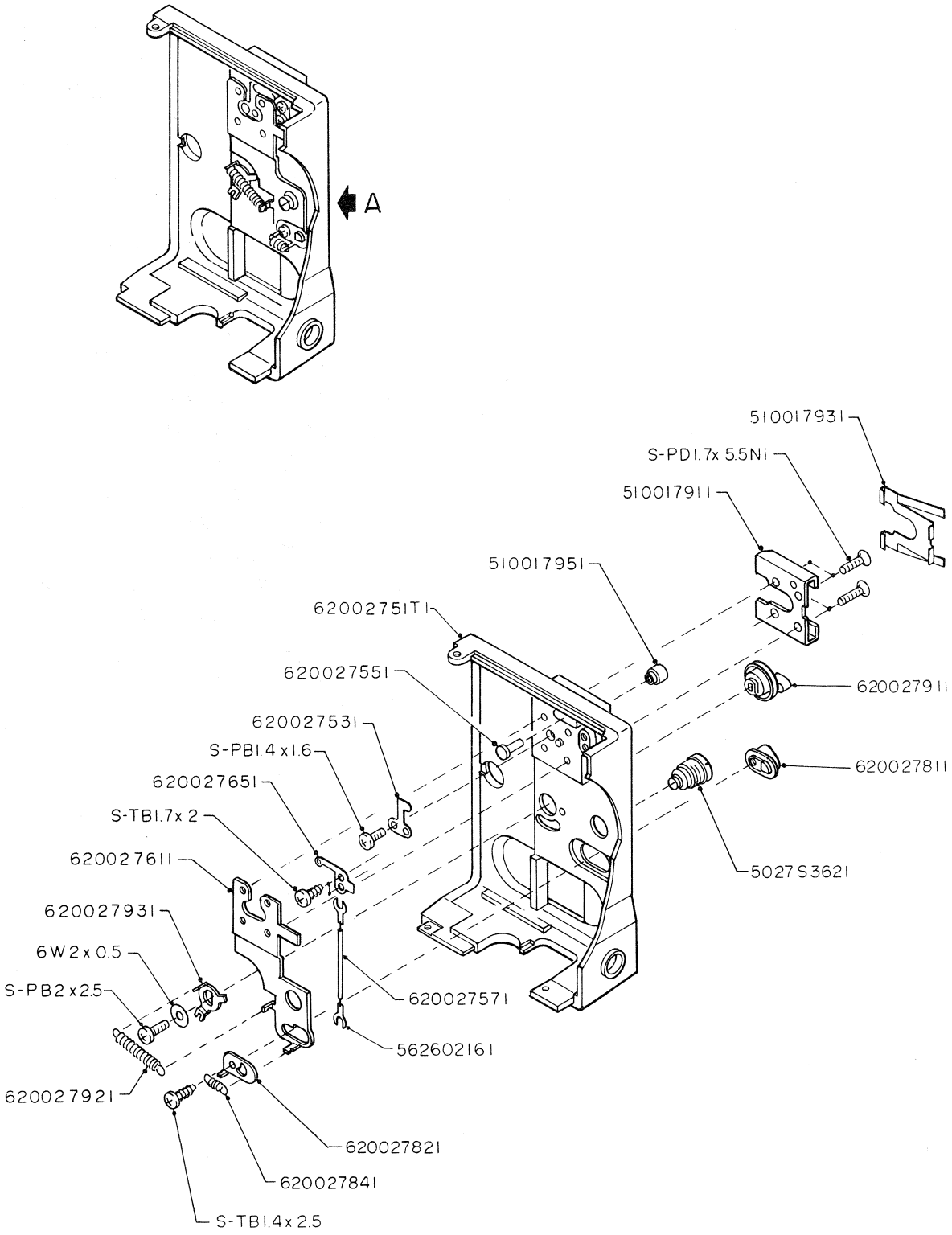
A
510017931
S-PD1.7x 5.5Ni
510017911
510017951
62002751T1
620027911
620027551
620027531
S-PB1.4 x1.6
620027811
620027651
S-TB1.7x 2
5027S3621
620027611
620027931
6W2x0.5
S-PB2x2.5
620027571
562602161
620027921
620027821
620027841
S-TB1.4x2.5

DETAIL "A"

PARTS LIST

Parts No.	QTY.	Description	部品名称
62002751T1	1	Right side panel	右カバー
620027531	1	Contact plate	Xスイッチ(甲)
620027551	1	Pin	Xスイッチ押え棒
620027571	1	Leadwire	Xスイッチコード
620027611	1	Base plate	右カバー基板
620027651	1	Contact plate	Xスイッチ(乙)
620027811	1	Release lever	Lロック解除ツマミ
620027821	1	Plate	Lロック解除ツマミ止板
620027841	1	Spring	Lロック解除ツマミバネ
620027911	1	Mirror-up lever	MUツマミ
620027921	1	Spring	MUツマミバネ
620027931	1	Cam	MUツマミカム
510017911	1	Accessory shoe	下駄
510017931	1	Shoe cover	下駄カバー
510017951	1	Pin	X接点ピン
5027S3621	1	Flash terminal	シンクロソケットAss'y
562602161	1	Lug plate	ラグ板
S-PB1.4×1.6	2	Screw	Xスイッチ(甲)止ネジ
S-PB2×2.5	1	Screw	MUツマミ止ネジ
S-PD1.7×5.5Ni	4	Screw	下駄止ネジ
S-TB1.4×2.5	1	Screw	Lロック解除ツマミ止ネジ
S-TB1.7×2	2	Screw	Xスイッチ(乙)止ネジ
6W2×0.5	1	Washer	MUツマミワッシャー

Detail "B" Left Side Panel Ass'y

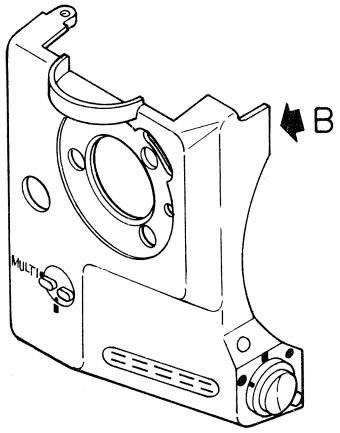

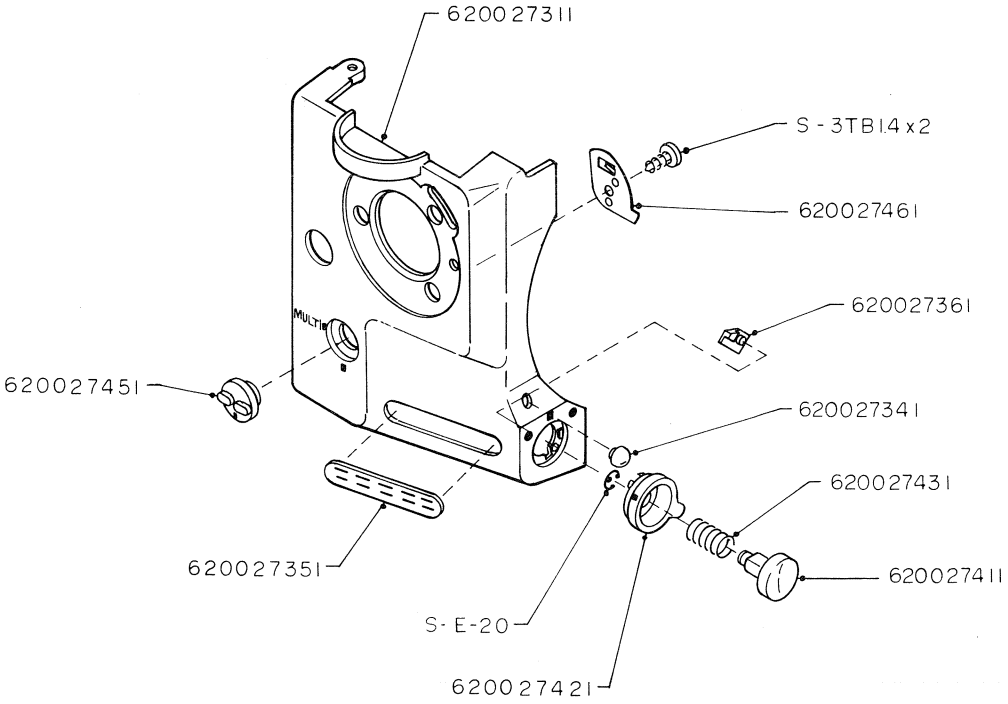

DETAIL "B"

PARTS LIST

Parts No.	QTY.	Description	部品名称
620027311	1	Left side panel	左カバー
620027341	1	Red dot	レンズ着脱マーク
620027351	1	Rubber	左カバーゴム
620027361	1	S guide stopper	Sガイドストッパー
620027411	1	Shutter release button	Sボタン
620027421	1	Shutter button guide	Sボタンガイド
620027431	1	Spring	Sボタンバネ
620027451	1	Multiple-exposure lever	マルチ ツマミ
620027461	1	Multiple change plate	マルチ切替板
S-3TB1.4×2	1	Screw	マルチ ツマミ止ネジ
S-E-20	1	E-ring	Sボタン止リング

Detail "C" Name Frame Ass'y

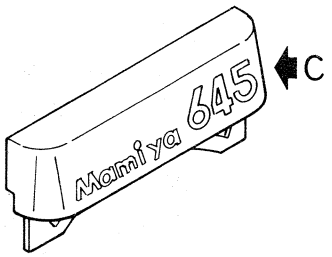

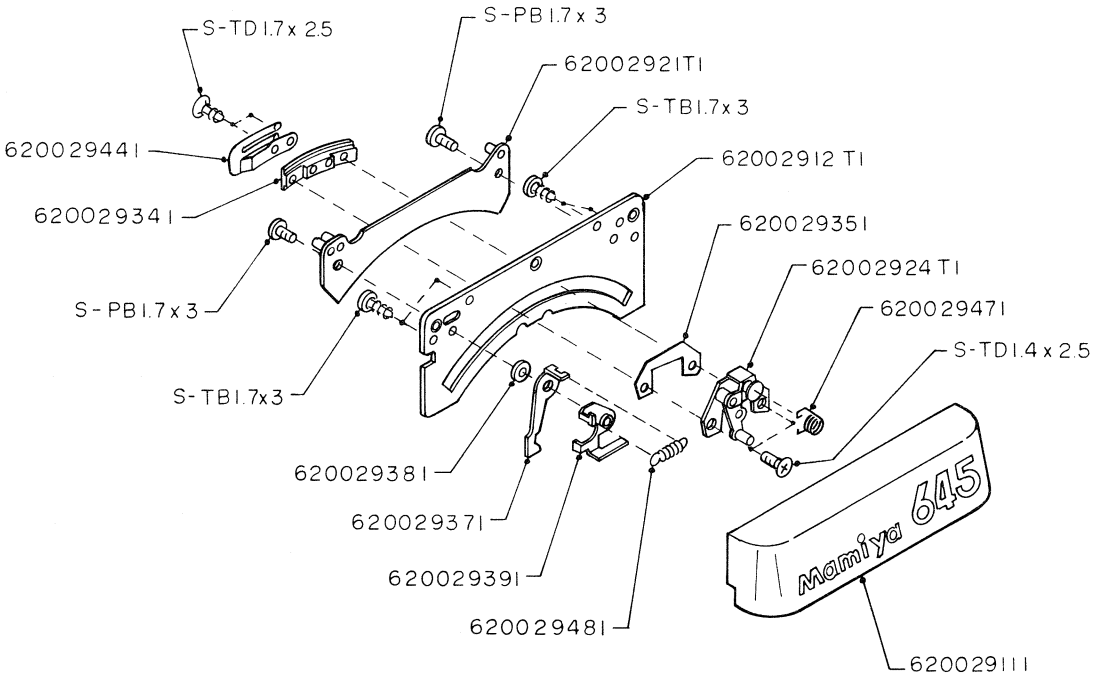

DETAIL "C"

PARTS LIST

Parts No.	QTY.	Description	部品名称
620029111	1	Name plate	ネーム枠
62002912T1	1	Coupling base plate	ネーム枠基板
62002921T1	1	Variable resistor board	Fプリント
62002924T1	1	Aperture control plate	連動ピン台
620029341	1	Guide key	ブラシ台
620029351	1	Plate	ブラシ台板
620029371	1	Return lever	戻し板
620029381	1	Collar	戻し板軸
620029391	1	Release lever	連動ピン逃し止板
620029441	1	Brush	絞りブラシ
620029471	1	Spring	連動板バネ
620029481	1	Spring	戻し板バネ
S-PB1.7×3	2	Screw	Fプリント止ネジ
S-TB1.7×3	4	Screw	ネーム枠止ネジ
S-TD1.4×2.5	2	Screw	連動ピン台ネジ
S-TD1.7×2.5	2	Screw	絞りブラシネジ

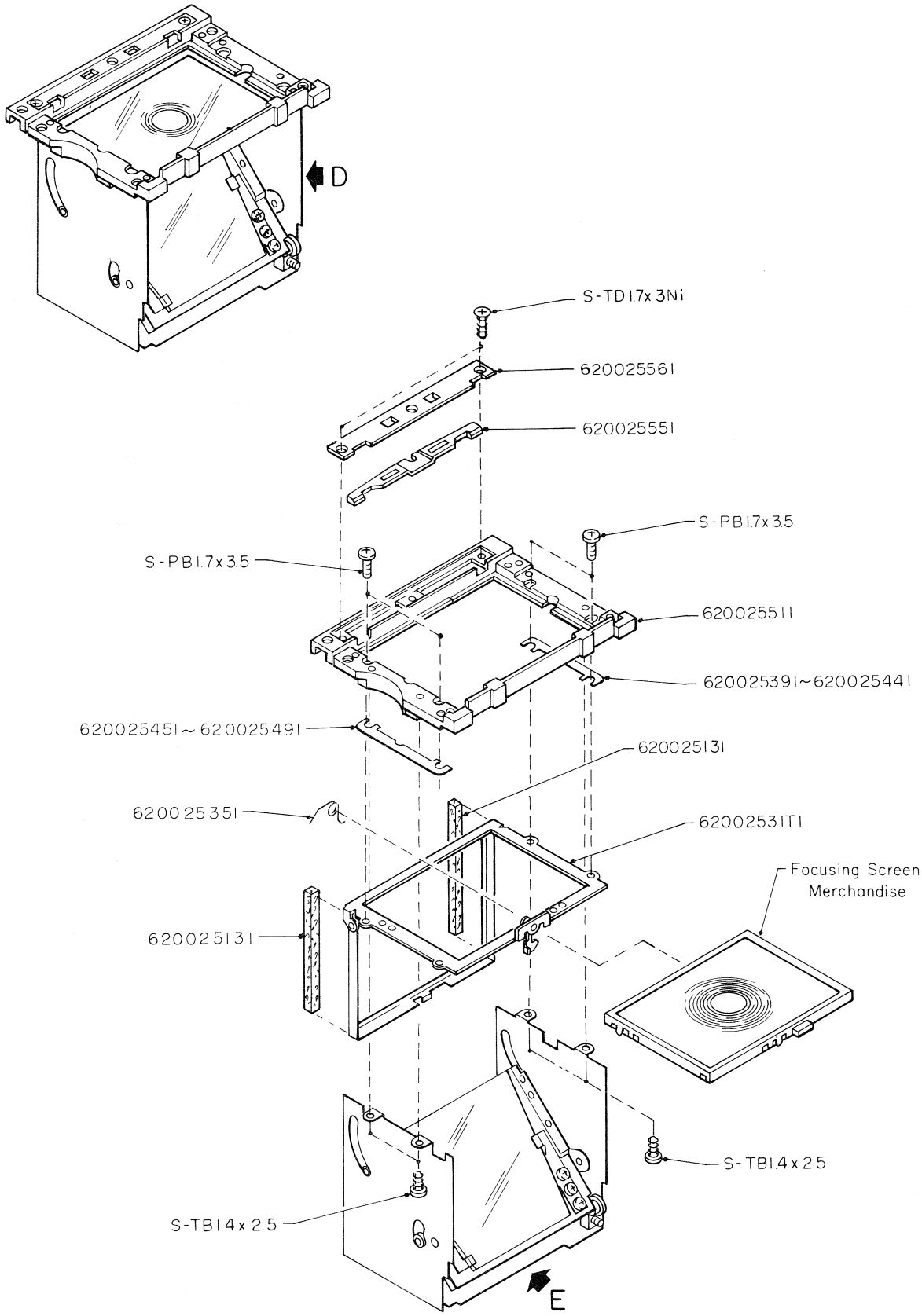
D
S-TD1.7x3Ni
620025561
620025551
S-PB1.7x3.5
S-PB1.7x3.5
620025511
62002539I~620025441
62002545I~620025491
620025131
620025351
6200253IT1
Focusing Screen
Merchandise
620025131
S-TB1.4x2.5
S-TB1.4x2.5
E

DETAIL "D"

PARTS LIST

Parts No.	QTY.	Description	部品名称
620025131	2	Sealing moltopren	ミラー側面モルト
62002531T1	1	Focusing screen frame Ass'y	フレネル基板Ass'y
620025351	1	Spring	フレネル基板レバーバネ
620025391	0to1	Spacer t=0.5	P調右座
620025411	0to1	Spacer t=0.3	P調右座
620025421	0to1	Spacer t=0.1	P調右座
620025431	0to1	Spacer t=0.05	P調右座
620025441	0to1	Spacer t=0.03	P調右座
620025451	0to1	Spacer t=0.5	P調左座
620025461	0to1	Spacer t=0.3	P調左座
620025471	0to1	Spacer t=0.1	P調左座
620025481	0to1	Spacer t=0.05	P調左座
620025491	0to1	Spacer t=0.03	P調左座
620025511	1	MB base frame	MB台枠
620025551	1	MB click plate	MB台枠バネ
620025561	1	MB plate	MB台枠後板
S-PB1.7×3.5	4	Screw	フレネル基板止ネジ
S-TB1.4×2.5	4	Screw	MB基板止ネジ
S-TD1.7×3Ni	2	Screw	MB台枠後板ネジ

Detail "E" Mirror Housing Ass'y-II

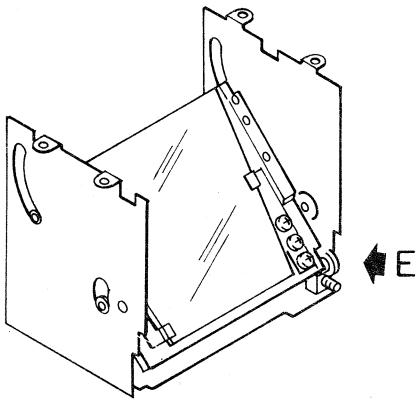

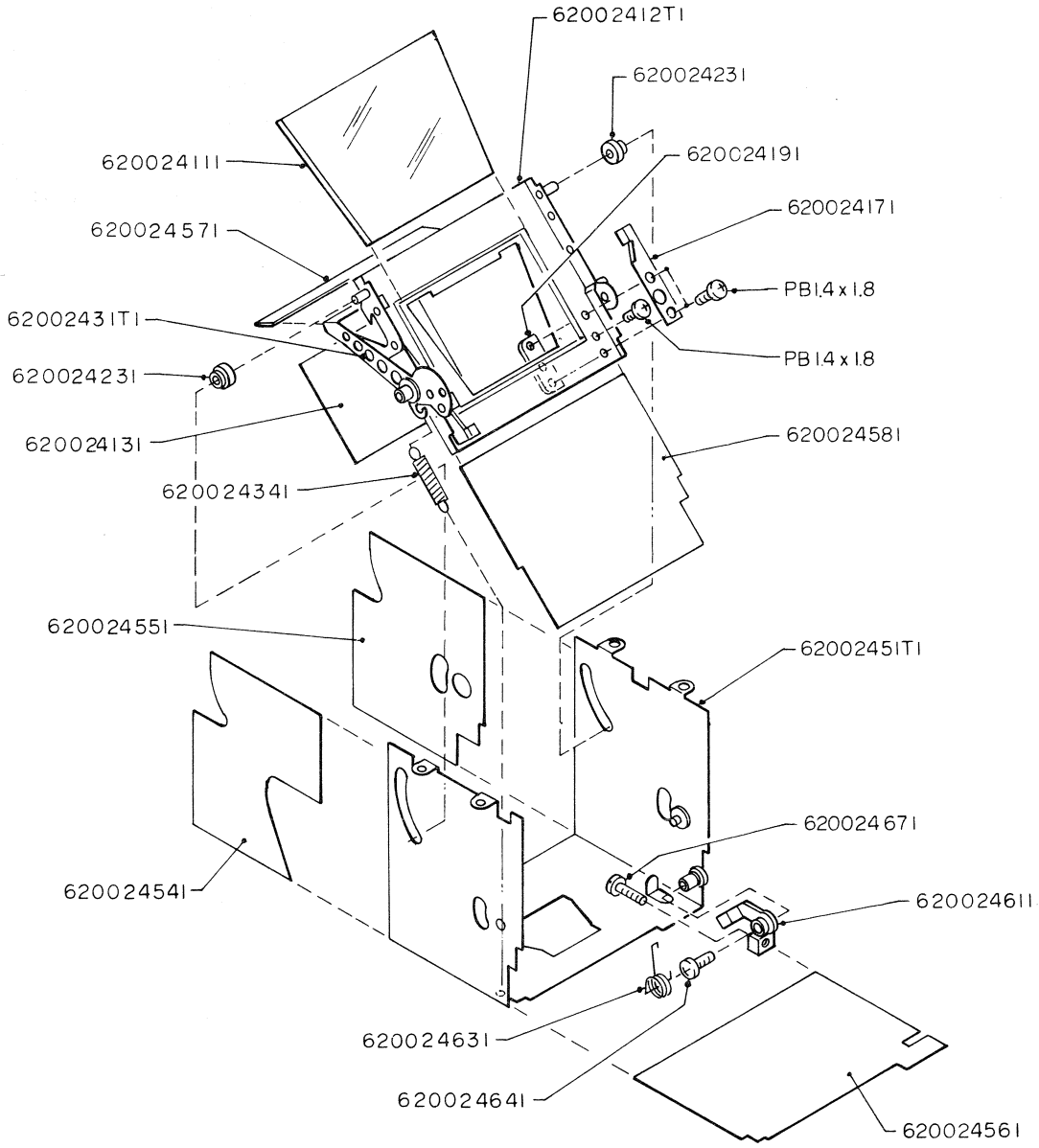

DETAIL "E"

PARTS LIST

Parts No.	QTY.	Description	部品名称
620024111	1	Mirror	ミラー
62002412T1	1	Mirror holder plate	Mホルダー Ass'y
620024131	1	R.A leatherette	ミラー裏紙
620024171	1	Retaining plate	ミラー右押え
620024191	1	Slate	ミラー押え座金
620024231	2	Collar	Mローラー
62002431T1	1	Mirror arm Ass'y	MアームAss'y
620024341	1	Spring	Mアームバネ左
62002451T1	1	MB base plate	MB基板
620024541	1	R.A leatherette	MB左遮光紙
620024551	1	R.A leatherette	MB右遮光紙
620024561	1	R.A leatherette	MB下遮光紙
620024571	1	R.A leatherette	Mアーム遮光紙
620024581	1	R.A leatherette	Mホルダー遮光紙
620024611	1	Mirror shock absorber	M規正板
620024631	1	Spring	M規正板バネ
620024641	1	Screw	M規正板止ネジ
620024671	1	Screw	M規正ネジ
PB1.4×1.8	3	Screw	ミラー右押え止ネジ

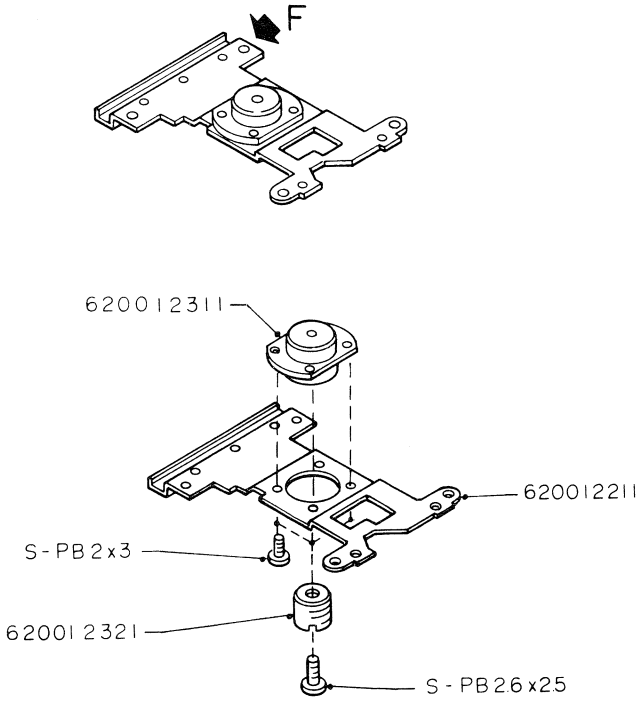

DETAIL "F"

PARTS LIST

Parts No.	QTY.	Description	部品名称
620012211	1	Bottom base plate	下基板
620012311	1	Tripod socket	三脚止め(大)
620012321	1	Tripod screw	三脚止め(小)
S-PB2×3	4	Screw	三脚(大)止ネジ
S-PB2.6×2.5	1	Screw	三脚(小)止ネジ

Y01012 Winding Mechanism Ass'y

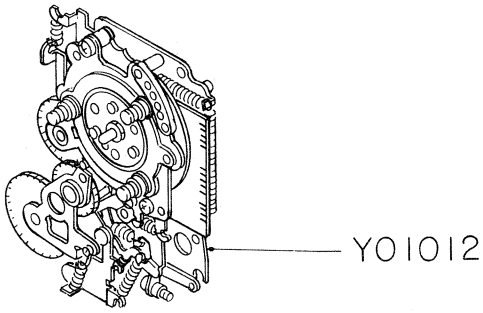

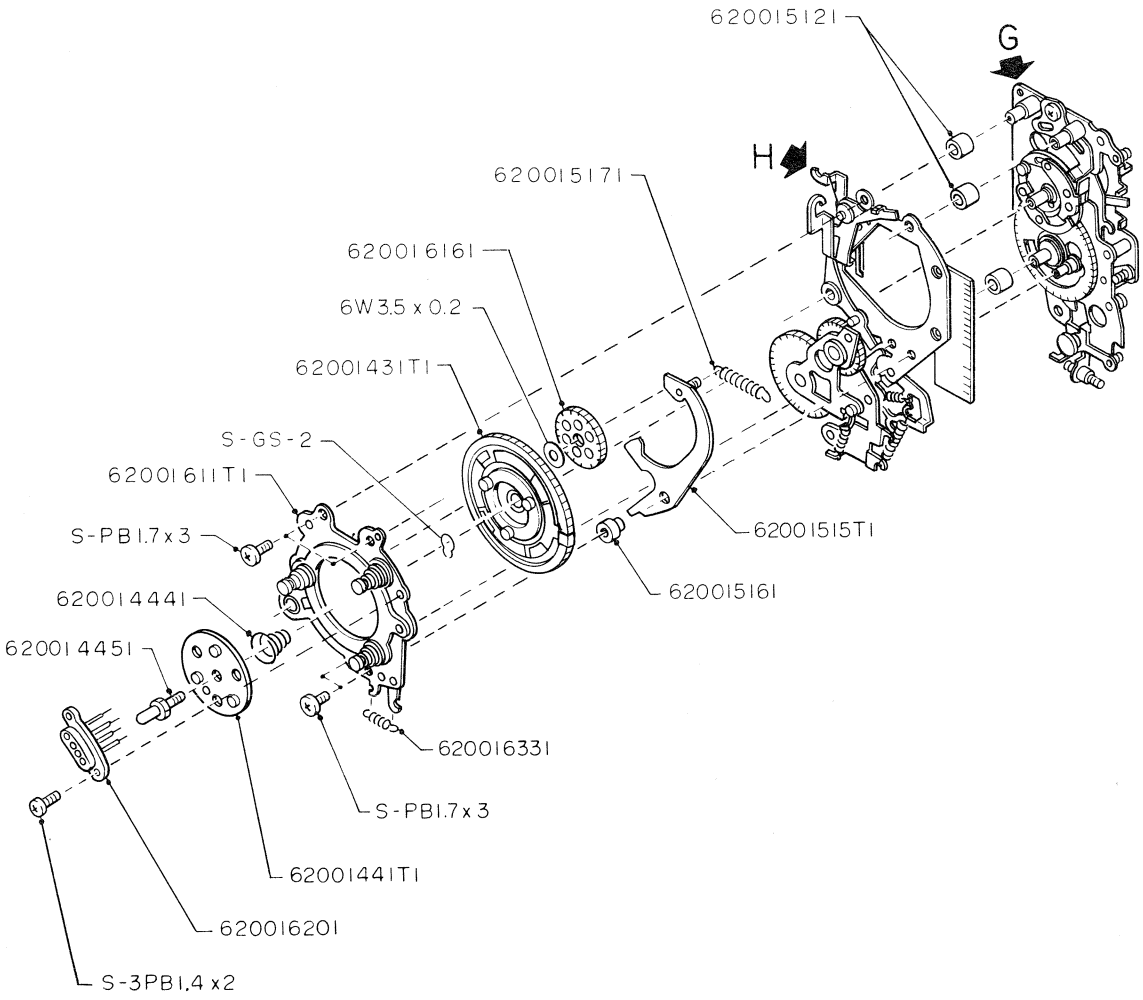

PARTS LIST

Parts No.	QTY.	Description	部品名称
62001431T1	1	F1 gear	F1歯車
62001441T1	1	Coupler plate	カプラー板
620014441	1	Spring	カプラー板バネ
620014451	1	Screw	カプラー板止ネジ
620015121	3	Spacer	F基板スペーサー
62001515T1	1	Winding lever	巻上げレバー
620015161	1	Support	巻上げレバー軸
620015171	1	Spring	巻上げレバーバネ
62001611T1	1	Winding knob lever plate	巻上げ基板
620016161	1	F2 gear	F2歯車
620016201	1	Connector	ワインダーコネクター
620016331	1	Spring	逆転止バネ
S-PB1.7×3	4	Screw	巻上げ基板止ネジ
S-3PB1.4×2	1	Screw	ワインダーコネクター止ネジ
S-GS-2	1	GS-ring	巻上げ板止リング
6W3.5×0.2	1	Washer	F2歯車ワッシャー

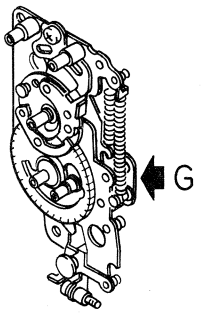
G

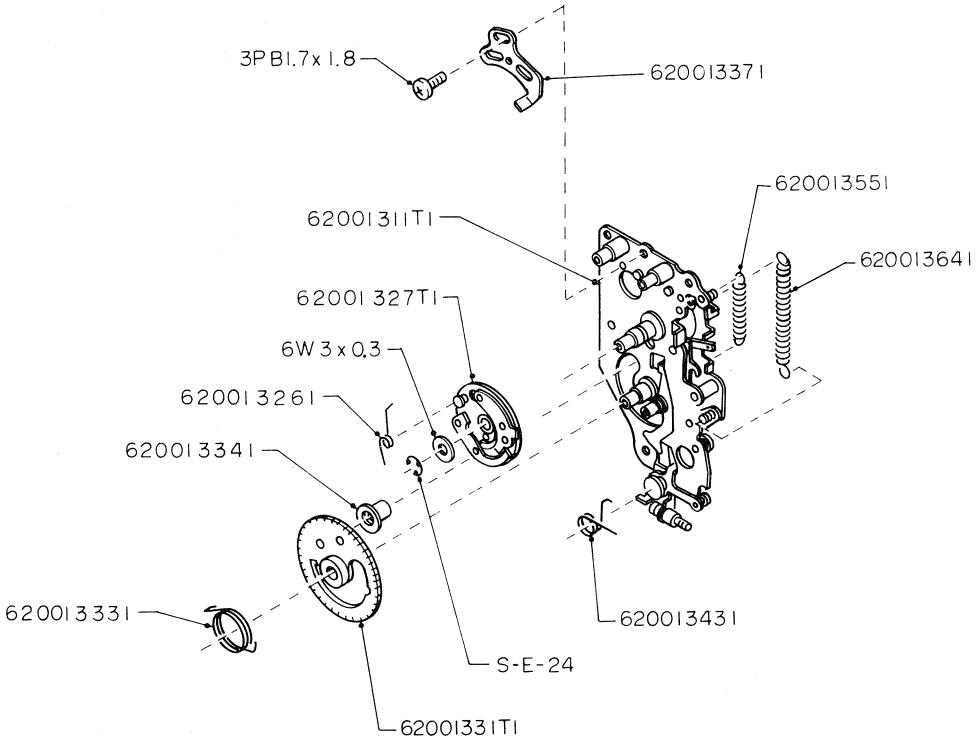
3PB1.7x1.8
620013371
620013551
62001311T1
620013641
62001327T1
6W3x0.3
620013261
620013341
620013331
620013431
S-E-24
62001331T1

DETAIL "G"

PARTS LIST

Parts No.	QTY.	Description	部品名称
62001311T1	1	M base plate	M基板
620013261	1	Spring	Sクラッチレバーバネ
62001327T1	1	Advancing cluch	クラッチ板
62001331T1	1	S2 gear	S2歯車
620013331	1	Spring	S2歯車戻しバネ
620013341	1	Roller	S2歯車ローラー
620013371	1	Cluch release lever	Sクラッチ解除板
620013431	1	Spring	Mレリースレバーバネ
620013551	1	Spring	Mレリース伝達レバーバネ
620013641	1	Spring	Mチャージ板バネ
3PB1.7×1.8	1	Screw	Sクラッチ解除板
6W3×0.3	1	Washer	クラッチ板ワッシャー
S-E24	1	E-ring	巻上げ軸 Eリング

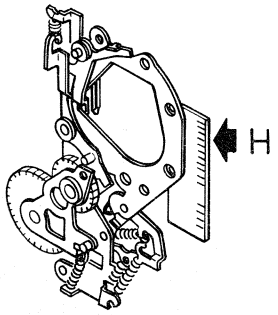
H

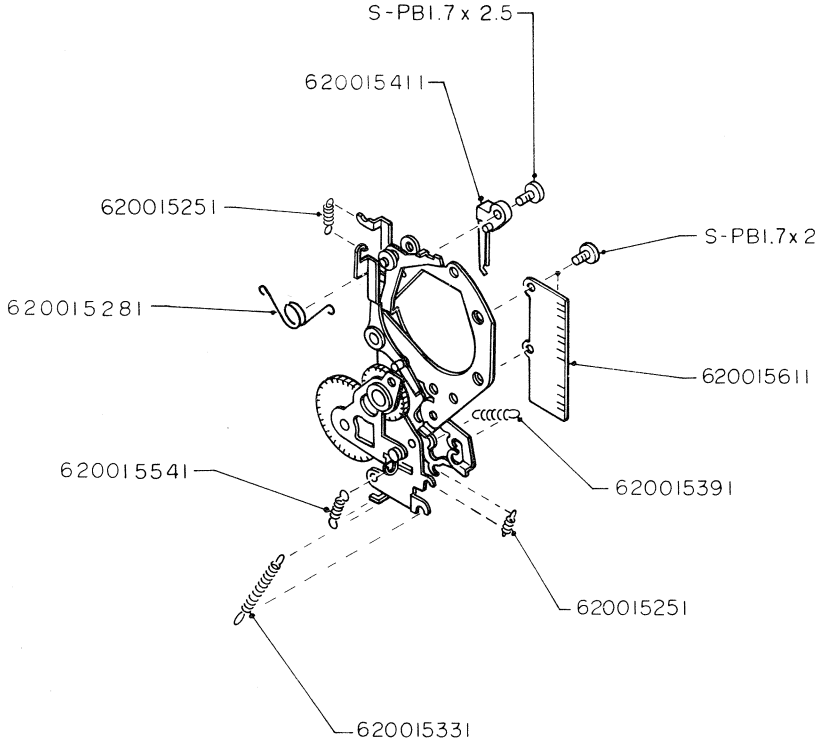
S-PB1.7x 2.5
620015411
620015251
S-PB1.7x2
620015281
620015611
620015541
620015391
620015251
620015331

DETAIL "H"

PARTS LIST

Parts No.	QTY.	Description	部品名称
620015251	2	Spring	信号レバーバネ
620015281	1	Spring	巻上げ解除レバーバネ
620015331	1	Spring	Sレバーバネ
620015391	1	Spring	Sレバー爪バネ
620015411	1	Switch	巻上げスイッチ
620015541	1	Spring	F3基板バネ
620015611	1	P.C board	Fプリント板
S-PB1.7×2	2	Screw	Fプリント板止ネジ
S-PB1.7×2.5	1	Screw	巻上げスイッチ止ネジ

Y01013 Shutter Base Plate Ass'y

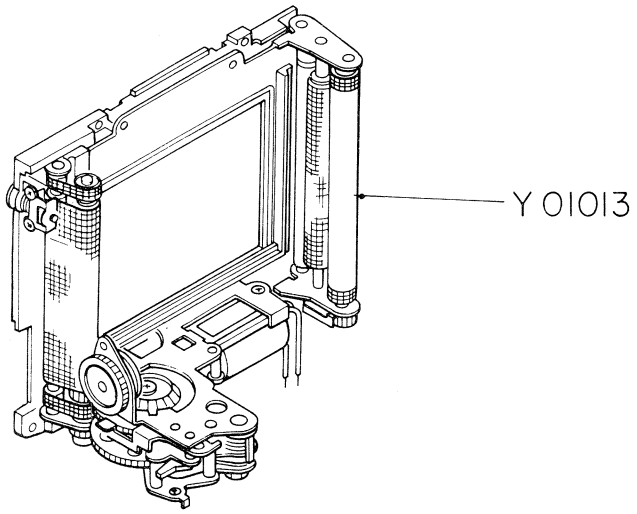

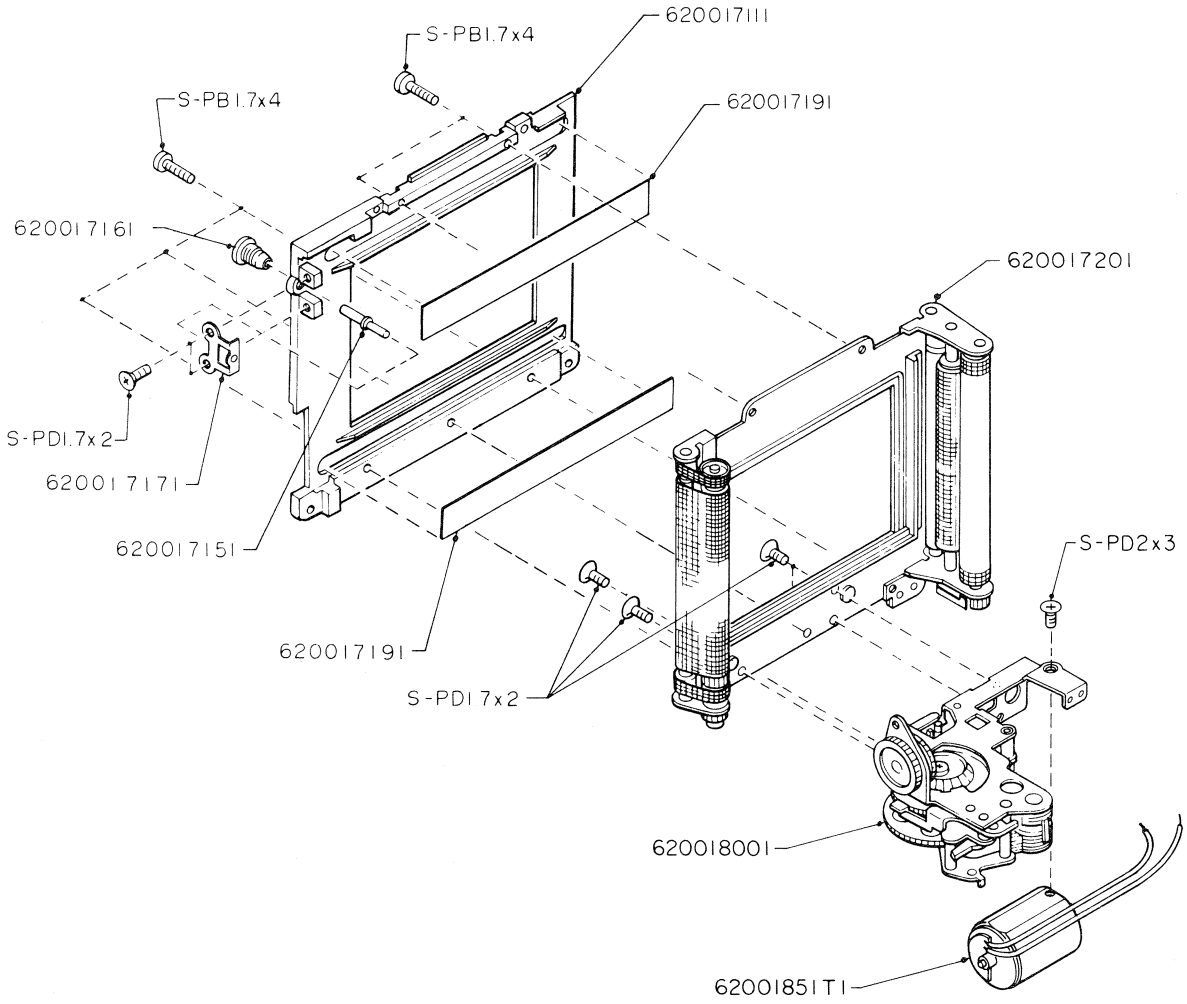

PARTS LIST

Parts No.	QTY.	Description	部品名称
620017111	1	Shutter base plate	シャッター基板
620017151	1	Signal pin	信号ピン
620017161	1	Guide signal pin	信号ピンガイド
620017171	1	Angel plate	信号ピン基板
620017191	2	Curtain	カーテン
620017201	1	Shutter curtain Ass'y	幕軸基板Ass'y
620018001	1	S3 base plate Ass'y	S3基板Ass'y
62001851T1	1	Moving coil	MC
S-PB1.7×4	5	Screw	幕軸基板止ネジ
S-PD1.7×2	2	Screw	信号ピン基板止ネジ
S-PD1.7×2	4	Screw	S3基板止ネジ
S-PD2×3	1	Screw	MC止ネジ

Wind-up Crank N

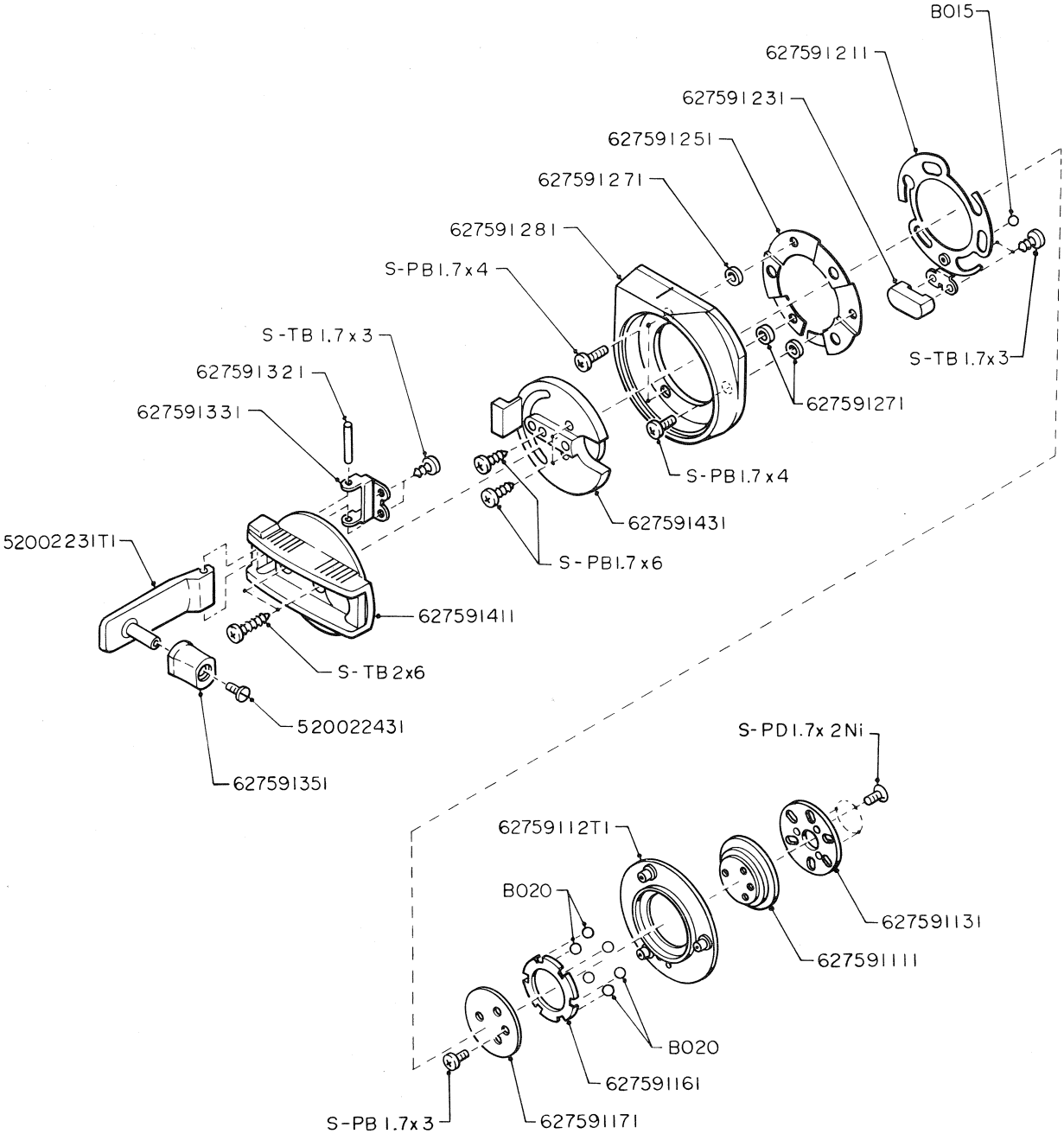
B015
627591211
627591231
627591251
627591271
627591281
S-PB1.7x4
S-TB1.7x3
627591271
S-TB1.7x3
627591321
627591331
S-PB1.7x4
627591431
S-PB1.7x6
52002231T1
627591411
S-TB2x6
520022431
627591351
S-PD1.7x2Ni
62759112T1
B020
627591131
627591111
B020
627591161
S-PB1.7x3
627591171

PARTS LIST

Parts No.	QTY.	Description	部品名称
627591111	1	Coupling collar	ノブ軸
62759112T1	1	Coupling disk	ノブ軸受け
627591131	1	Base disk	ノブ軸板
627591161	1	Spacer	ボールリテーナ
627591171	1	Plate	ノブ軸止め
627591211	1	Bayonet disk	ノブ止板
627591231	1	Knob	ノブ止板ツマミ
627591251	1	Leaf spring	ノブ止板押エ
627591271	3	Collar	ノブ止板軸カラー
627591281	1	Film advance case	ノブ止板カバー
627591321	1	Shaft	巻上クランク軸
627591331	1	Angle plate	巻上クランク軸受け
627591351	1	Knob	巻上クランクツマミ
627591411	1	Winding knob lid	巻上クランク台
627591431	1	Knob base ring	巻上クランク台座
52002231T1	1	Advance crank	巻上クランク
520022431	1	Screw	巻上クランクツマミ止ネジ
S-PB1.7×3	1	Screw	ノブ軸止ネジ
S-PB1.7×4	3	Screw	ノブ止板押え止ネジ
S-PB1.7×6	3	Screw	巻上クランク台止ネジ
S-PD1.7×2Ni	3	Screw	ノブ軸板止ネジ
S-TB1.7×3	2	Screw	巻上クランク軸受止ネジ
S-TB1.7×3	2	Screw	ノブ止板止ネジ
S-TB2×6	2	Screw	巻上クランク台止ネジ
B015	1	Steel ball(φ1.5)	ノブ止板ボール
B020	6	Steel ball(φ2)	ボール

Mamiya

PARTS CATALOG

M645 SUPER

120/220 Outer Housing
Film Holder N
120 Roll Film Insert &
220 Roll Film Insert

PC85-M645S-201

120/220 Outer Housing Film Holder N

Outer Housing Film Holder N Ass'y- I

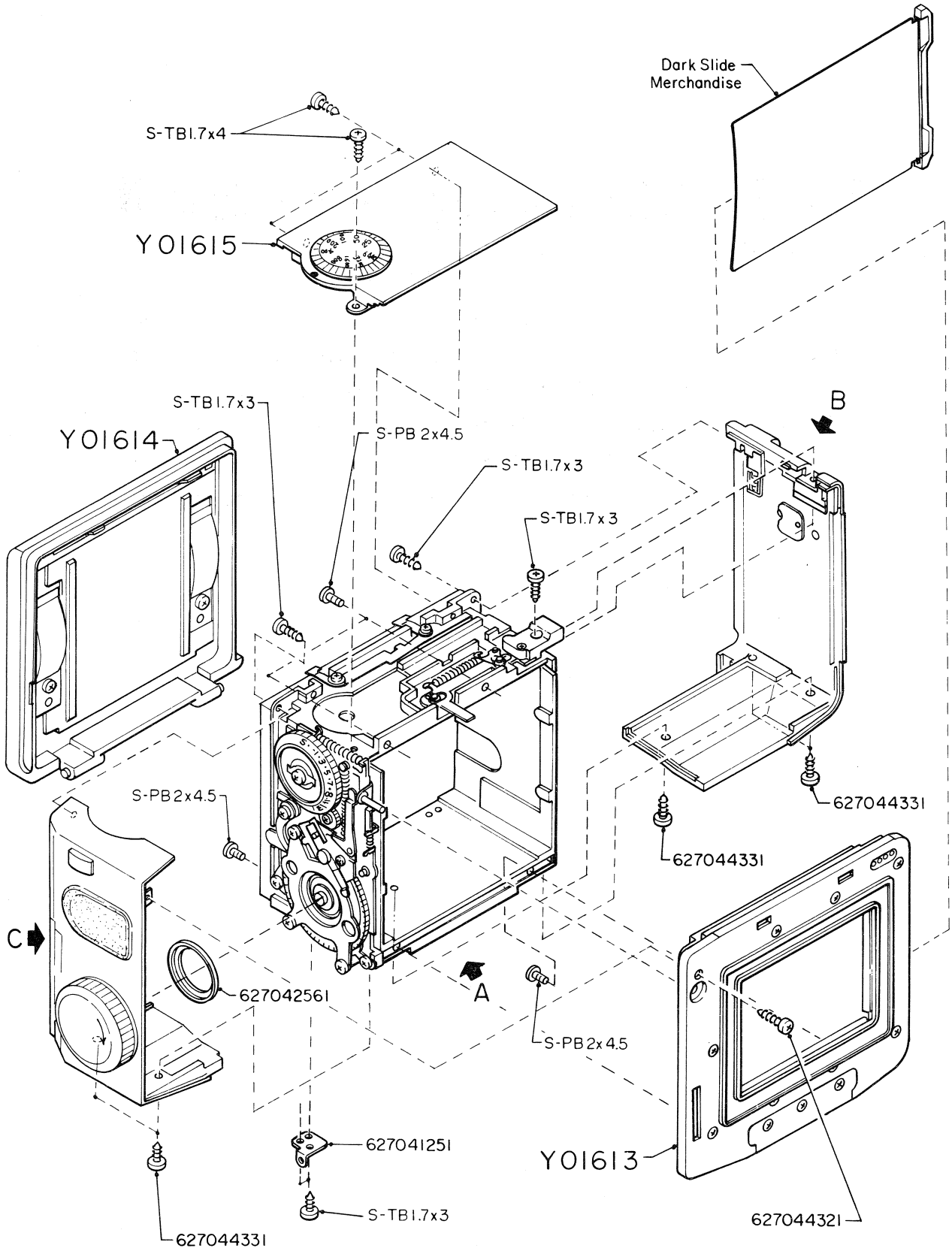

PARTS LIST

Parts No.	QTY.	Description	部品名称
627041251	1	Left hinge holder	蝶板左軸受
627042561	1	Guide ring	Fクラッチ摩擦板ガイド
627044321	1	Screw	RH左カバー止ネジ
627044331	5	Screw	RH左右カバー止ネジ
Y01613	1	Rail frame Ass'y	レール板Ass'y
Y01614	1	Back cover Ass'y	裏ブタAss'y
Y01615	1	Upper cover Ass'y	RH上カバーAss'y
S-PB2×4.5	4	Screw	RHボディ止ネジ
S-TB1.7×3	2	Screw	蝶板左軸受止ネジ
S-TB1.7×3	1	Screw	RH左カバー止ネジ
S-TB1.7×3	2	Screw	RH右カバー止ネジ
S-TB1.7×4	3	Screw	RH上カバー止ネジ

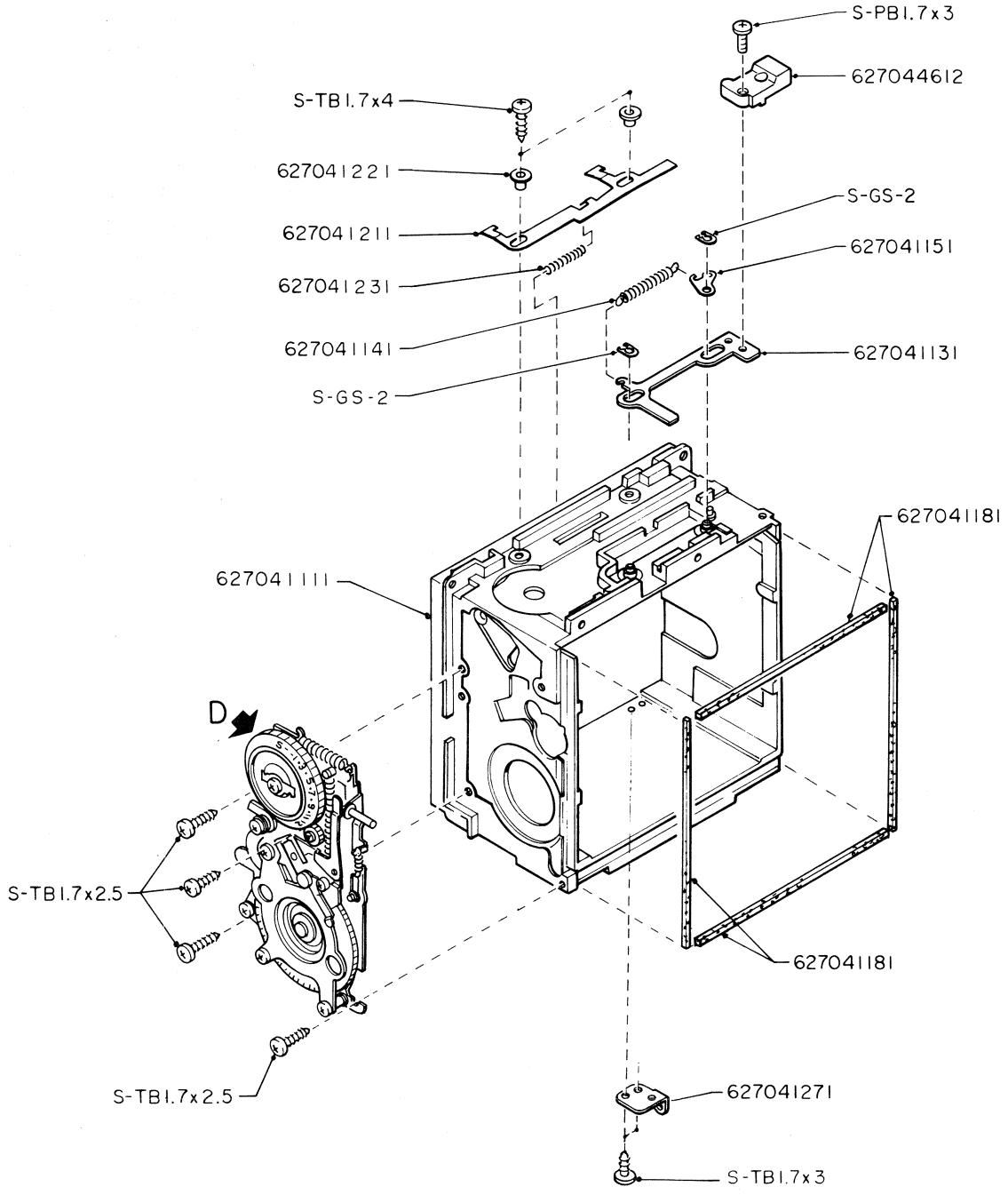
S-PB1.7x3
627044612
S-TB1.7x4
627041221
627041211
S-GS-2
627041151
627041231
627041141
627041131
S-GS-2
627041181
627041111
D
S-TB1.7x2.5
627041181
S-TB1.7x2.5
627041271
S-TB1.7x3

DETAIL "A"

PARTS LIST

Parts No.	QTY.	Description	部品名称
627041111	1	RH body housing	RHボディ
627041131	1	Lever	RH取外しレバー
627041141	1	Spring	RH取外しレバーバネ
627041151	1	Hook plate	RH取外しレバーバネカケ
627041181	4	Searing moltopren	RHボディモルト
627041211	1	Latch plate	裏ぶた掛け金
627041221	2	Collar	裏ぶた掛け金軸
627041231	1	Spring	裏ぶた掛け金バネ
627041271	1	Right hinge holder	蝶板右軸受
627044612	1	Knob	RH取外しツマミ
S-PB1.7×3	1	Screw	RH取外しツマミ止ネジ
S-TB1.7×2.5	4	Screw	RH基板止ネジ
S-TB1.7×3	2	Screw	蝶板右軸受け止ネジ
S-TB1.7×4	2	Screw	裏ぶた掛け金止ネジ
S-GS·2	2	GS-ring	RH取外しレバー押えリング

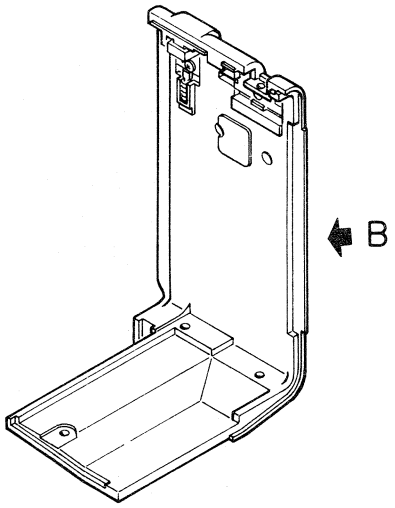
B

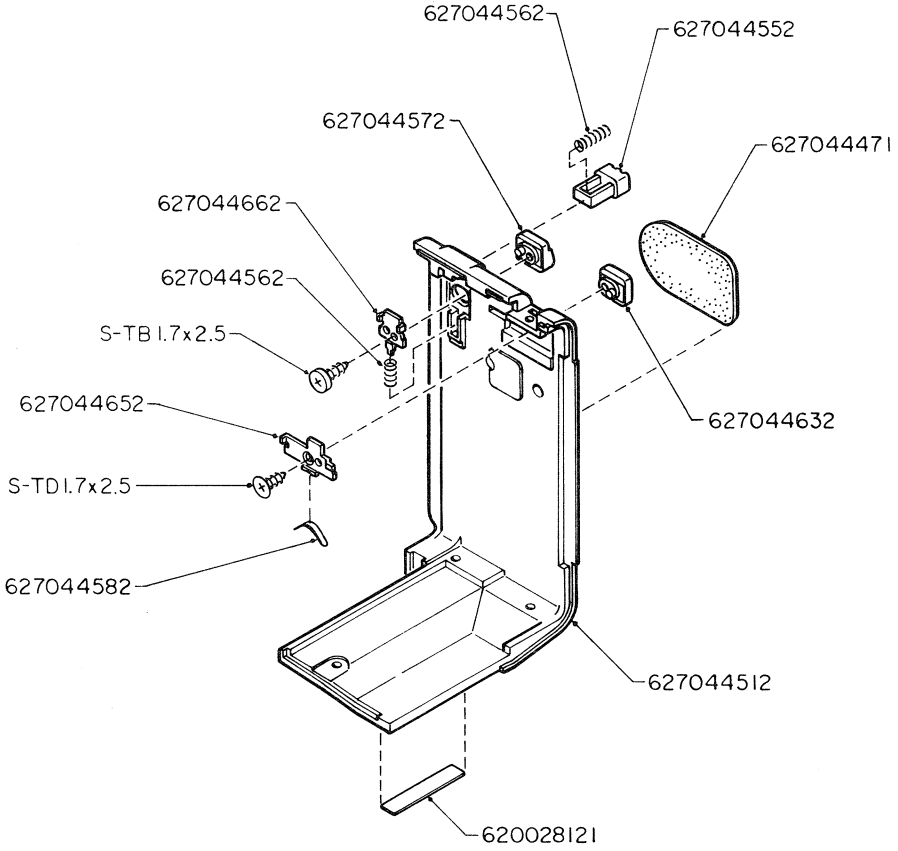
627044562
627044552
627044572
627044471
627044662
627044562
S-TB1.7x2.5
627044652
627044632
S-TD1.7x2.5
627044582
627044512
620028121

DETAIL "B"

PARTS LIST

Parts No.	QTY.	Description	部品名称
627044471	1	Rubber	RH右カバーゴム
627044512	1	Right side panel	RH右カバー
627044552	1	Knob	裏ぶた解除ツマミ
627044562	2	Spring	裏ぶた解除ツマミバネ
627044572	1	Knob	裏ぶた解除ロック
627044582	1	Leaf spring	RH取外しロックバネ
627044632	1	Knob	RH取外しロック
627044652	1	Lock plate	RH取外しロック板
627044662	1	Lock plate	裏ぶた解除ロック板
620028121	1	Number plate	RH No.プレート
TB1.7×2.5	1	Screw	裏ぶた取外しロックネジ
TD1.7×2.5	1	Screw	RH取外しロックネジ

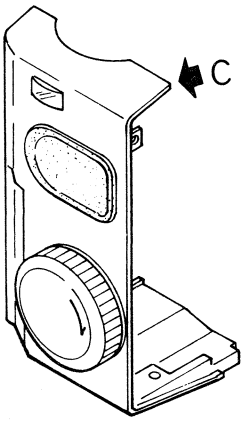
C

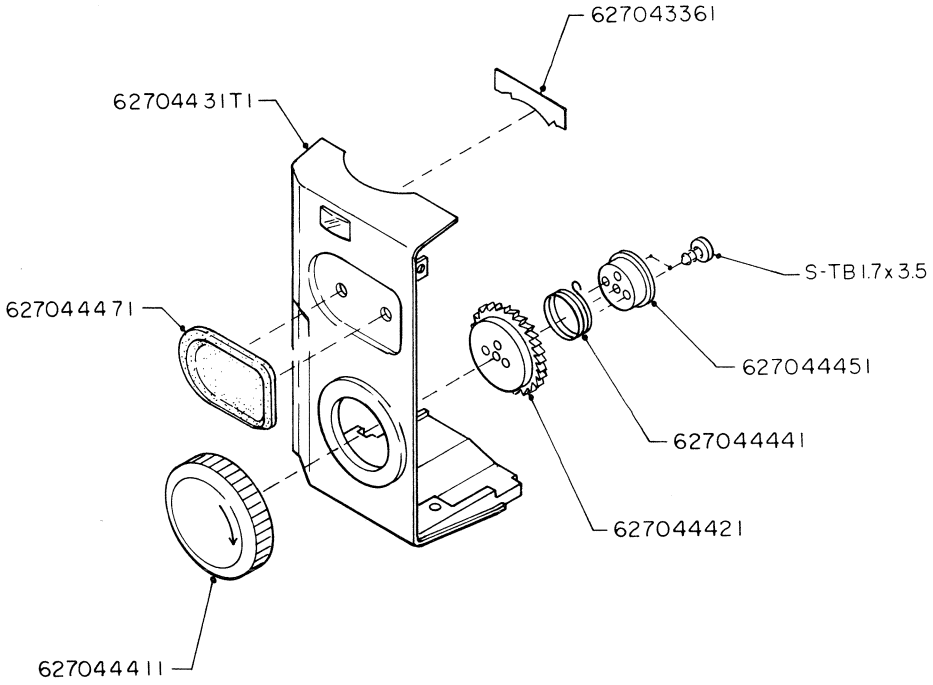
627043361
627044311
S-TB1.7x3.5
627044471
627044451
627044441
627044421
627044411

DETAIL "C"

PARTS LIST

Parts No.	QTY.	Description	部品名称
627043361	1	Indicator	カウンター指標
62704431T1	1	Left side panel	PH左カバー
627044411	1	Film advance knob	RHノブ
627044421	1	Advance gear	RHノブ軸
627044441	1	Spring	RHノブクラッチバネ
627044451	1	Disk	RHノブクラッチバネ筒
627044471	1	Rubber	RHカバーゴム
S-TB1.7×3.5	2	Screw	RHノブクラッチ止ネジ

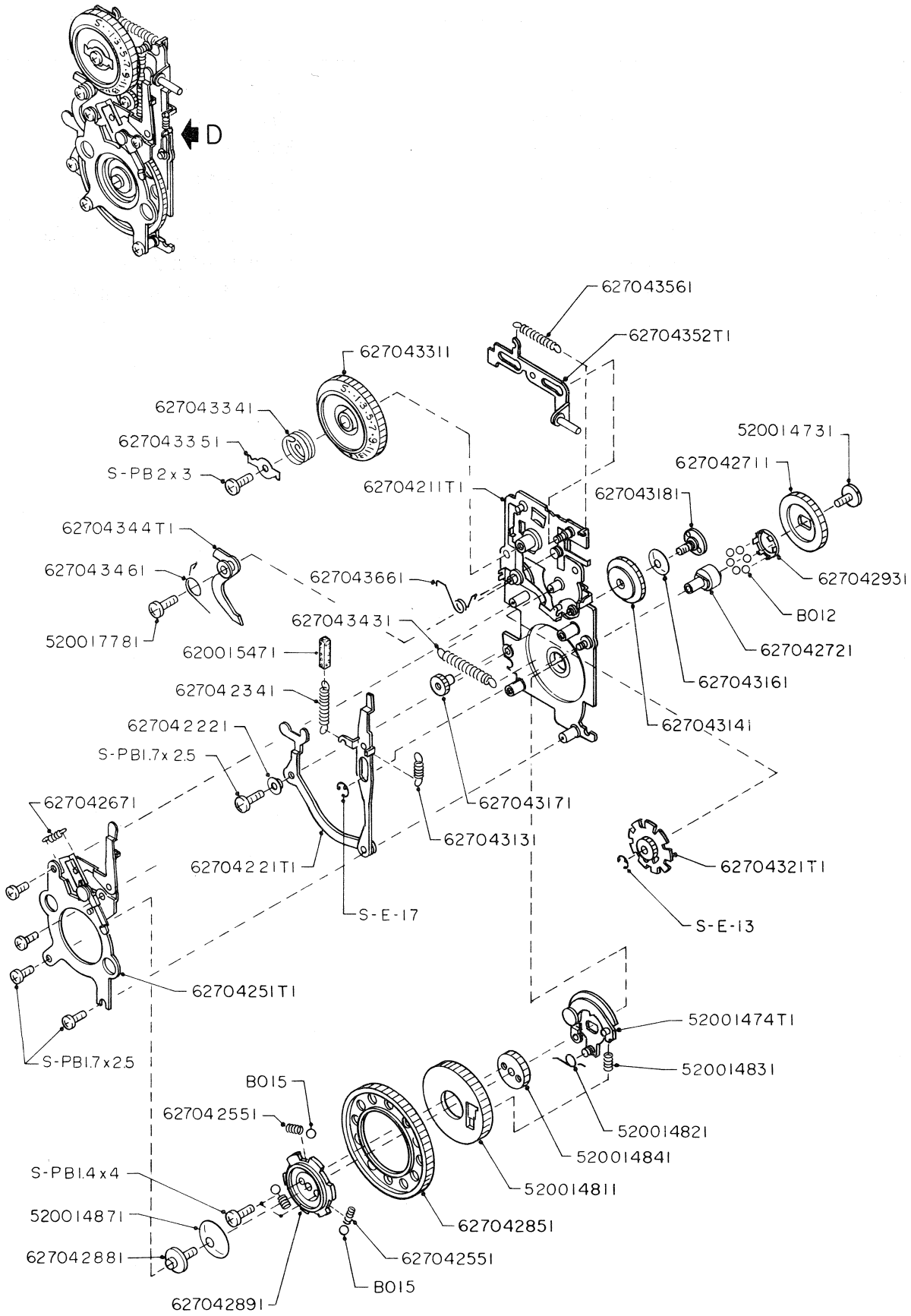
D
627043561
62704352T1
627043311
627043341
627043351
S-PB2x3
520014731
627042711
62704211T1
627043181
62704344T1
627043461
627043661
627042931
B012
520017781
627043431
620015471
627042721
627042341
627043161
627042221
627043141
S-PB1.7x2.5
627042671
627043171
627043131
62704221T1
62704321T1
S-E-17
S-E-13
62704251T1
52001474T1
S-PB1.7x2.5
520014831
B015
627042551
520014821
520014841
S-PB1.4x4
520014811
520014871
627042851
627042881
627042551
B015
627042891

DETAIL "D"

Parts No.	QTY.	Description	部品名称
62704211T1	1	Winding base plate	RH基板Ass'y
62704221T1	1	Link lever	裏ぶた信号レバーAss'y
627042221	1	Collar	裏ぶた信号レバー軸
627042341	1	Spring	C解除レバーバネ
62704251T1	1	F5 plate	F5歯車軸受Ass'y
627042551	3	Spring	F5歯車軸ボールバネ
627042671	1	Spring	F5回転止レバーバネ
627042711	1	F6 gear	F6歯車
627042721	1	F6 Shaft	F6歯車軸
627042851	1	F5 gear	F5歯車
627042881	1	Screw	Fクラッチ摩擦バネ止ネジ
627042891	1	F friction plate	Fクラッチ摩擦板
627042931	1	F6 retainer	F6歯車軸リテーナー
627043131	1	Spring	C1基板バネ
627043141	1	C1 gear	C1歯車
627043161	1	C1 friction washer	C1摩擦ワッシャー
627043171	1	C2 gear	C2歯車
627043181	1	Shaft	C1摩擦軸
62704321T1	1	Counter dividing device	割出板 Ass'y
627043311	1	Counter	カウンター板
627043341	1	Spring	C戻しバネ
627043351	1	C plate	C戻し押え
627043431	1	Spring	割出しレバーバネ
62704344T1	1	F clutch	Fクラッチ爪
627043461	1	Spring	Fクラッチ爪バネ
62704352T1	1	F signal lever	F信号レバー
627043561	1	Spring	F信号レバーバネ
627043661	1	Spring	セットレバーバネ
620015471	1	Cushion	消音モルト
520014731	1	Screw	F6歯車止ネジ
52001474T1	1	Advancing clutch	Fクラッチレバー Ass'y
520014811	1	F clutch wheel	Fクラッチ爪車
520014821	1	Spring	Fクラッチレバーバネ
520014831	1	Spring	Fクラッチ押しバネ
520014841	1	F ratichet gear	Fクラッチ送り歯車
520014871	1	Friction washer	Fクラッチ摩擦バネ
520017781	1	Screw	Fクラッチ爪止ネジ
S-PB1.4×4	2	Screw	F5歯車ネジ
S-PB1.7×2.5	4	Screw	F5歯車止ネジ
S-PB1.7×2.5	1	Screw	裏ぶた信号レバー止ネジ
S-PB2×3	1	Screw	カウンター板止ネジ
S-E-13	1	E-ring	C4歯車止リング
S-E-17	1	E-ring	C解除レバー止リング
B012	6	Steel ball(φ1.2)	F6歯車軸ボール
B015	3	Steel ball(φ1/16")	F5歯車軸ボール

Y01613 Rail Frame Ass'y

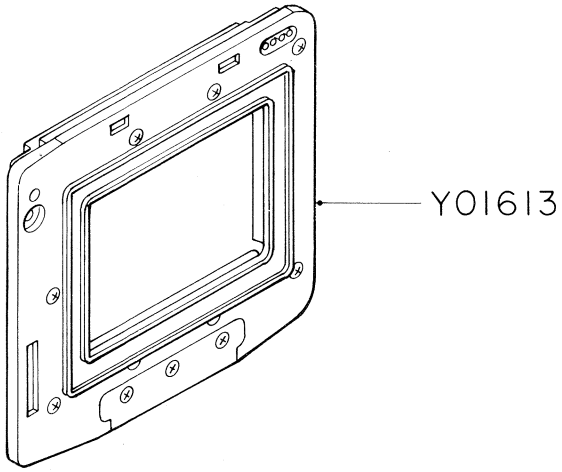

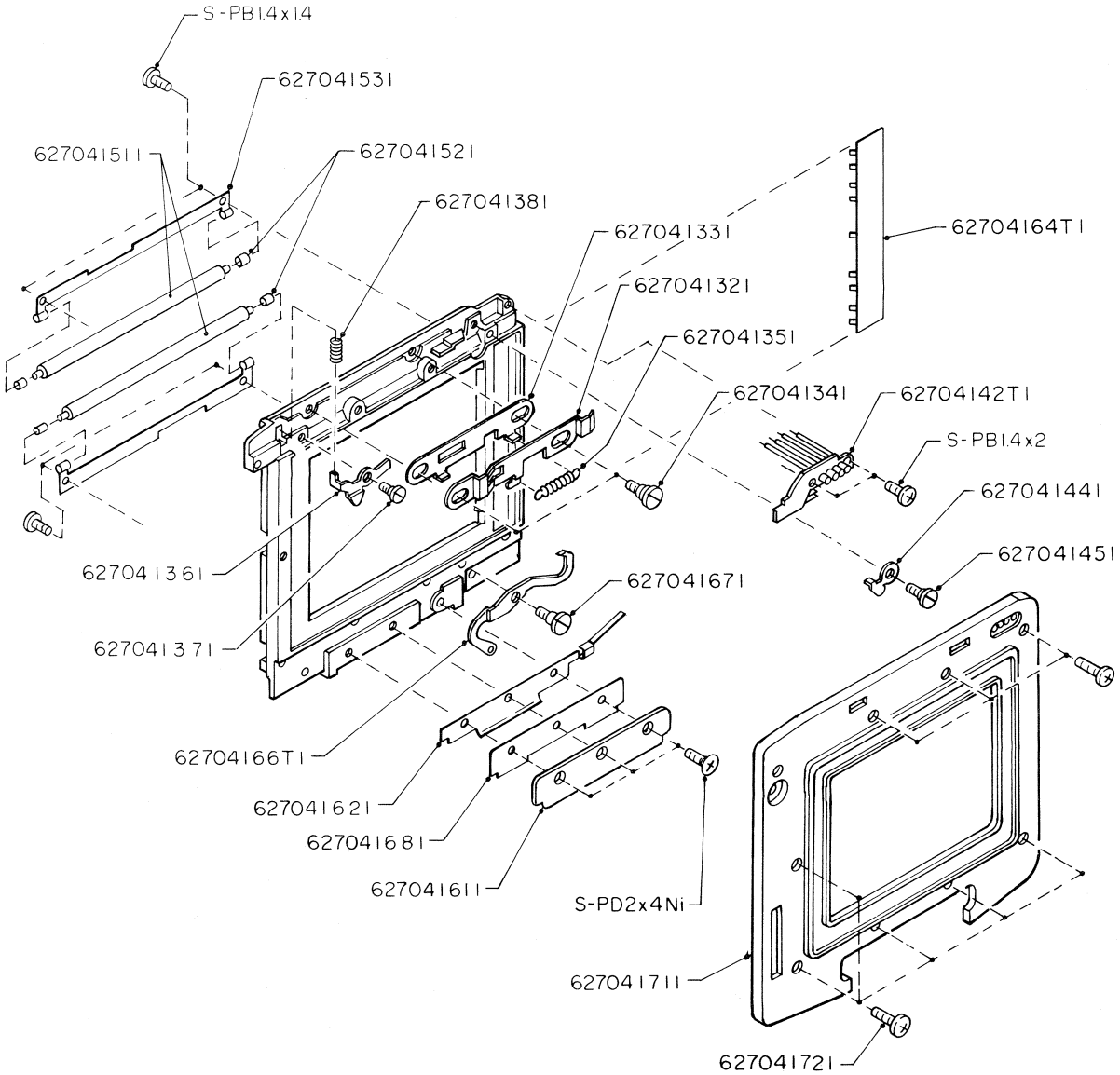

PARTS LIST

Parts No.	QTY.	Description	部品名称
627041321	1	Hook plate	RHフック板
627041331	1	Lock plate	RHロック板
627041341	2	Shoulder screw	RHロック板軸
627041351	1	Spring	RHロック板バネ
627041361	1	Lock lever	RHロックレバー
627041371	1	Shoulder screw	RHロックレバー軸
627041381	1	Spring	RHロックレバーバネ
62704142T1	1	Contact pin Ass'y	RHピン台板Ass'y
627041441	1	Lever	引ぶたレバー
627041451	1	Shoulder screw	引ぶたレバー軸
627041511	2	Film roller	Fローラー
627041521	4	Collar	Fローラー軸受
627041531	2	Leaf spring	Fローラーバネ
627041611	1	Catch plate	RH掛け板
627041621	1	Leaf spring	RH掛け板バネ
62704164T1	1	Shield spring Ass'y	遮光バネAss'y
62704166T1	1	Lock claw	引フタロック爪
627041671	1	Shoulder Screw	引フタロック爪軸
627041681	1	Spacer	RH掛け板スペーサー
627041711	1	Frame	RH前板
627041721	8	Screw	RH前板止ネジ
S-PB1.4×1.4	4	Screw	Fローラー止ネジ
S-PB1.4×2	2	Screw	RHピン台板止ネジ
S-PD2×4Ni	3	Screw	RH掛け板止ネジ

Y01615 Upper Cover Ass'y

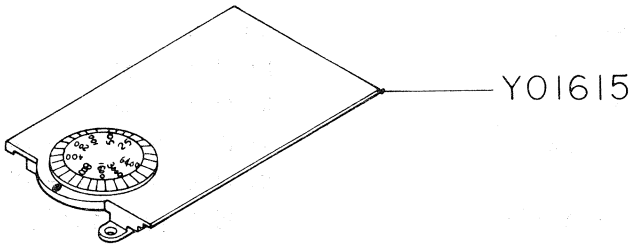

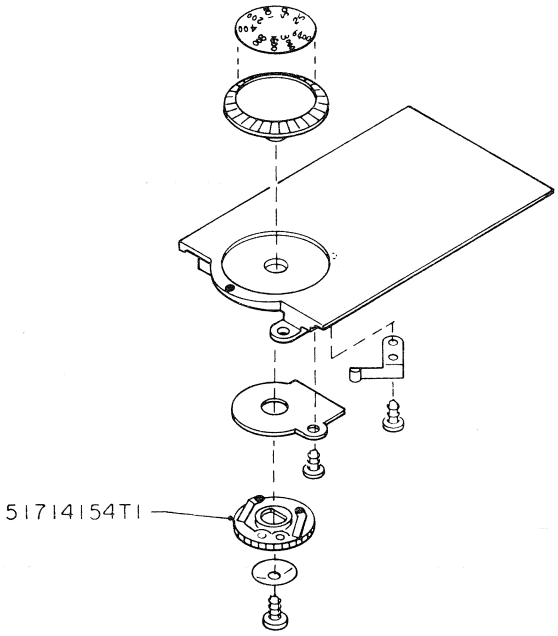

PARTS LIST

Parts No.	QTY.	Description	部 品 名 称
51714154T1	1	Brush disk	ASA接片台

120 Roll Film Insert & 220 Roll Film Insert

120 Roll Film Insert Ass'y

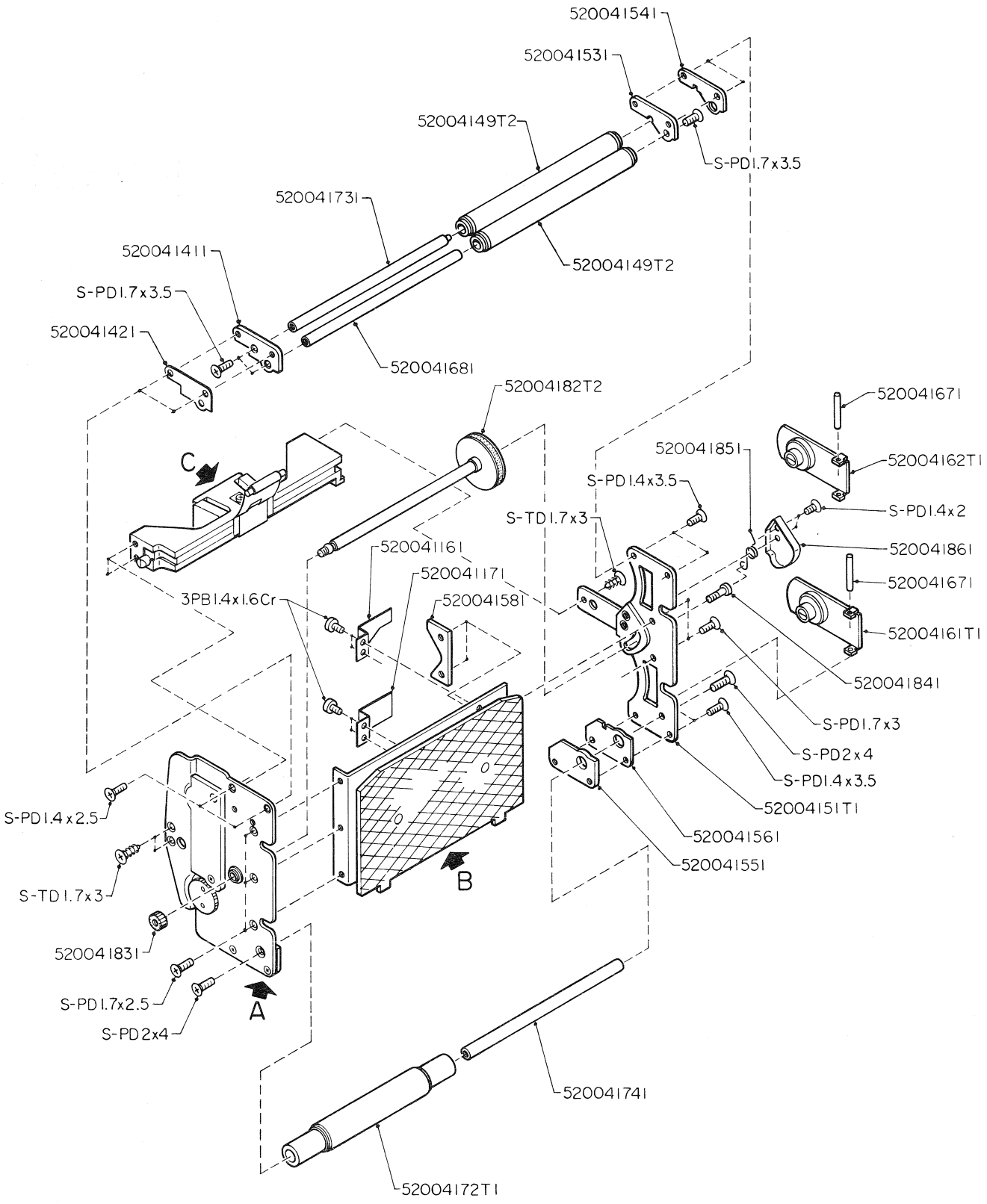

PARTS LIST

Parts No.	QTY.	Description	部品名称
520041161	1	Leaf spring U	SP受板バネ(上)
520041171	1	Leaf spring L	SP受板バネ(下)
520041411	1	Guide	Fガイド左上
520041421	1	Spacer	Fガイド左上座金
52004149T2	2	Roller	繰出しローラー
52004151T1	1	Right panel	右基板
520041531	1	Guide	Fガイド右上
520041541	1	Spacer	Fガイド右上座金
520041551	1	Guide	Fガイド右上
520041561	1	Spacer	Fガイド右上座金
520041581	1	Plate	右基板止め板
52004161T1	1	Spool clip L	SP受板下
52004162T1	1	Spool clip U	SP受板上
520041671	2	Shaft	SP受板軸
520041681	1	Shaft	繰出しローラー軸(前)
52004172T1	1	Film roller	巻取ローラー
520041731	1	Shaft	繰出しローラー軸(後)
520041741	1	Shaft	巻取ローラー軸
52004182T2	1	Friction wheel	摩擦コロ軸
520041831	1	Gear	摩擦コロ歯車
520041841	1	Screw	摩擦コロ軸ネジ
520041851	1	Spring	摩擦コロバネ
520041861	1	Cover	摩擦コロバネカバー
S-3PB1.4×1.6Cr	4	Screw	SP受板バネ止ネジ
S-PD1.4×2	2	Screw	摩擦コロバネカバー止ネジ
S-PD1.4×2.5	2	Screw	Fガイド左上止ネジ
S-PD1.4×3.5	4	Screw	Fガイド右上止ネジ
S-PD1.7×2.5	2	Screw	左基板止ネジ
S-PD1.7×3	2	Screw	右基板止ネジ
S-PD1.7×3.5	3	Screw	繰出しローラー軸止ネジ
S-PD2×4	2	Screw	巻取ローラー止ネジ
S-TD1.7×3	3	Screw	基板支め止ネジ

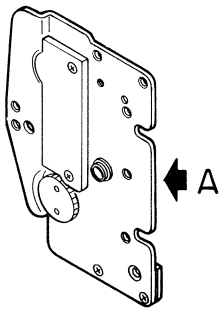
A

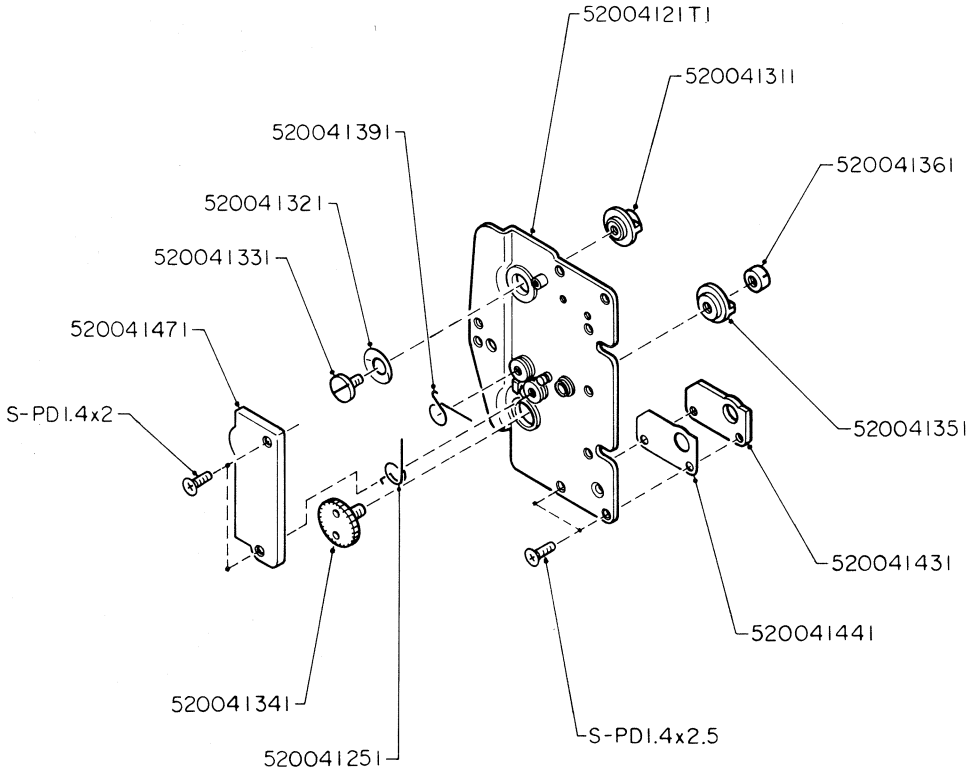
52004121T1
520041311
520041391
520041361
520041321
520041331
520041471
S-PD1.4x2
520041351
520041431
520041441
520041341
S-PD1.4x2.5
520041251

DETAIL "A"

PARTS LIST

Parts No.	QTY.	Description	部品名称
52004121T1	1	Left panel	左基板
520041251	1	Spring	SP歯車バネ
520041311	1	Spool holder	SP受
520041321	1	Friction spring	SP受ケ摩擦バネ
520041331	1	Screw	SP受ケ止ネジ
520041341	1	Film spool gear	SP歯車
520041351	1	Film take-up spool	SP歯車爪
520041361	1	Nut	SP歯車ナット
520041391	1	Spring	SP歯車サブギチバネ
520041431	1	Guide	Fサイド左下
520041441	1	Spacer	Fサイド左下座金
520041471	1	Cover	左基板カバー
S-PD1.4×2	2	Screw	左基板カバー止ネジ
S-PD1.4×2.5	2	Screw	Fガイド左下止ネジ

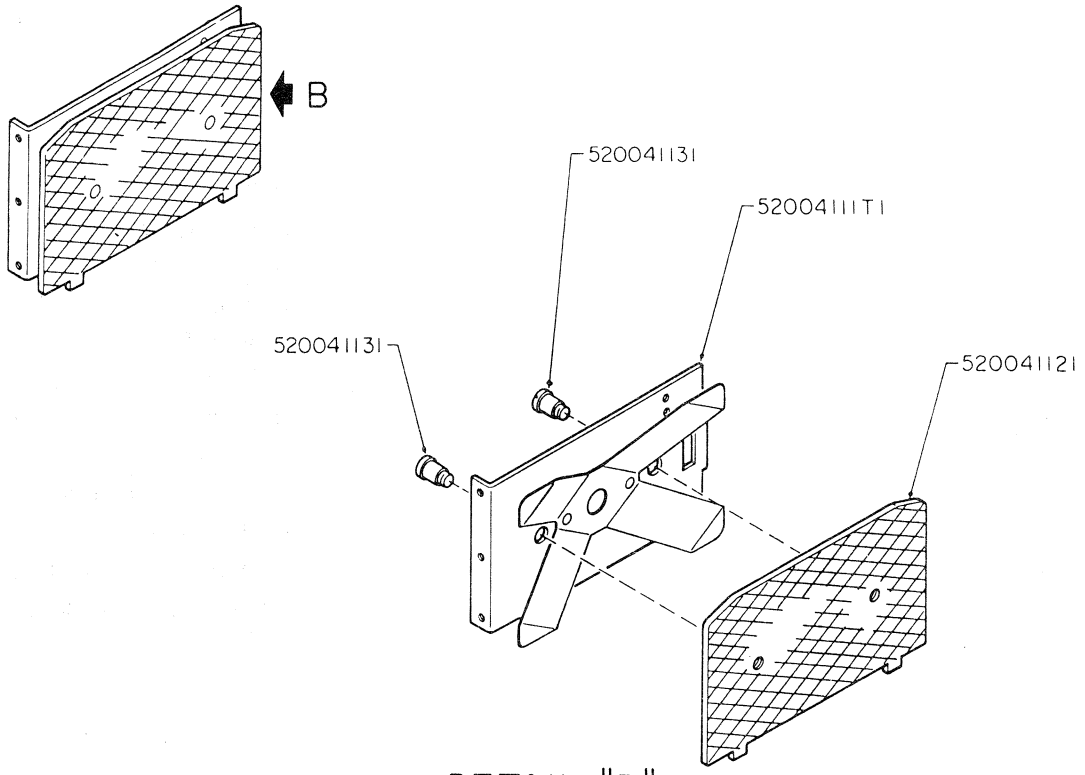

DETAIL "B"

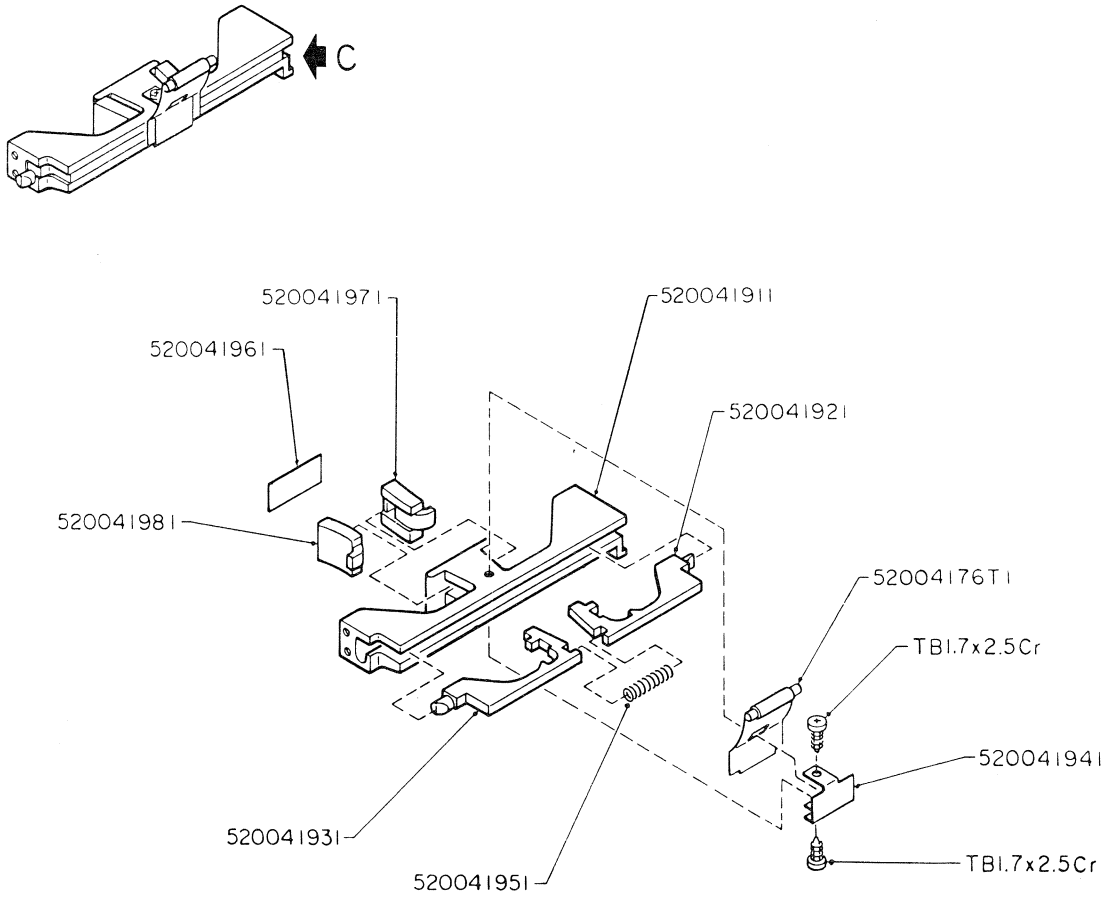

DETAIL "C"

PARTS LIST

Parts No.	QTY.	Description	部品名称
52004111T1	1	Base plate	H前基板
520041121	1	Pressure plate	圧板(120用)
520041131	2	Shoulder screw	圧板軸
52004176T1	1	T-spring	SPバネ
520041911	1	Release latch base	基板支え
520041921	1	Locking bracket	中枠ロック軸左
520041931	1	Locking bracket	中枠ロック軸右
520041941	1	Bracket	中枠ロック軸支え
520041951	1	Spring	ロック軸バネ
520041961	1	Index plate for 120	基板支えプレート(120用)
520041971	1	Release latch	中枠ツマミ左
520041981	1	Release latch	中枠ツマミ右
TB1.7×2.5Cr	2	Screw	SPバネ止ネジ

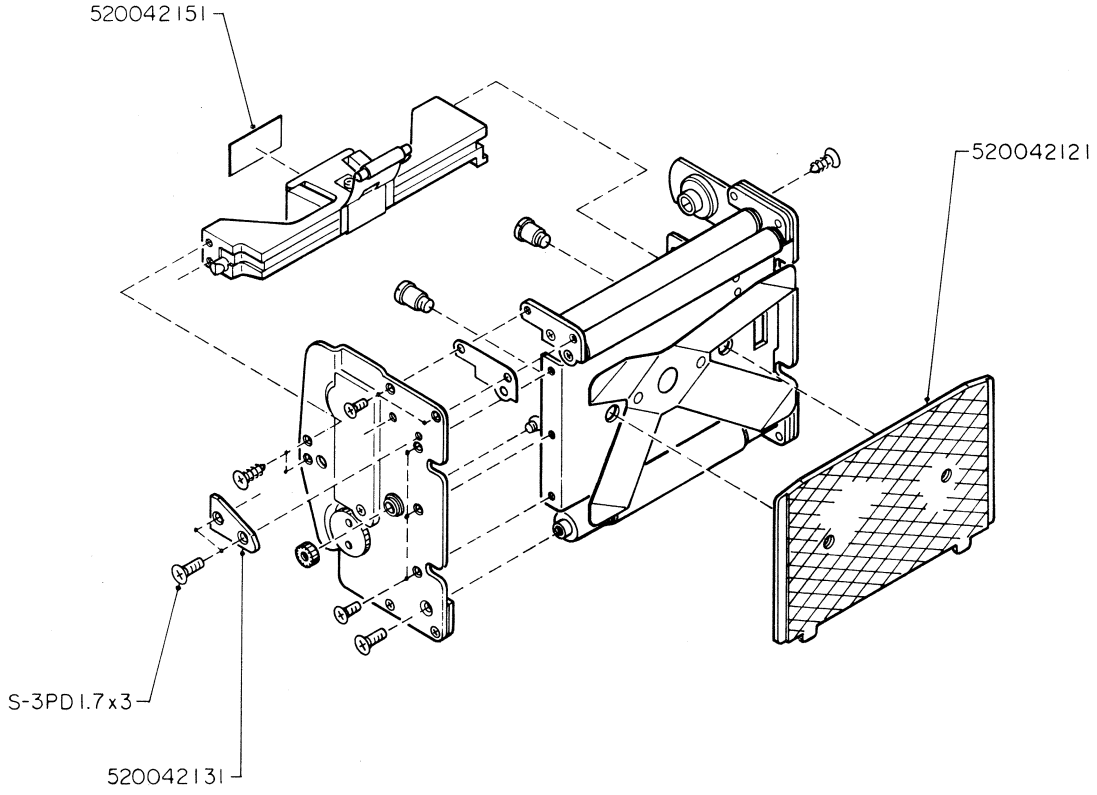
520042151
520042121
S-3PD1.7x3
520042131

PARTS LIST

Parts No.	QTY.	Description	部品名称
520042121	1	Pressure plate	圧板(220用)
520042131	1	Guide	220用フィルムカム
520042151	1	Index plate for 220	基板支えプレート(220用)
S-3PD1.7×3	2	Screw	220用フィルムカム止ネジ

Mamiya

PARTS CATALOG

M645 SUPER

Waist-Level Finder N

AE Prism Finder N

Prism Finder N

PC85-M645S-301

Waist-Level Finder N

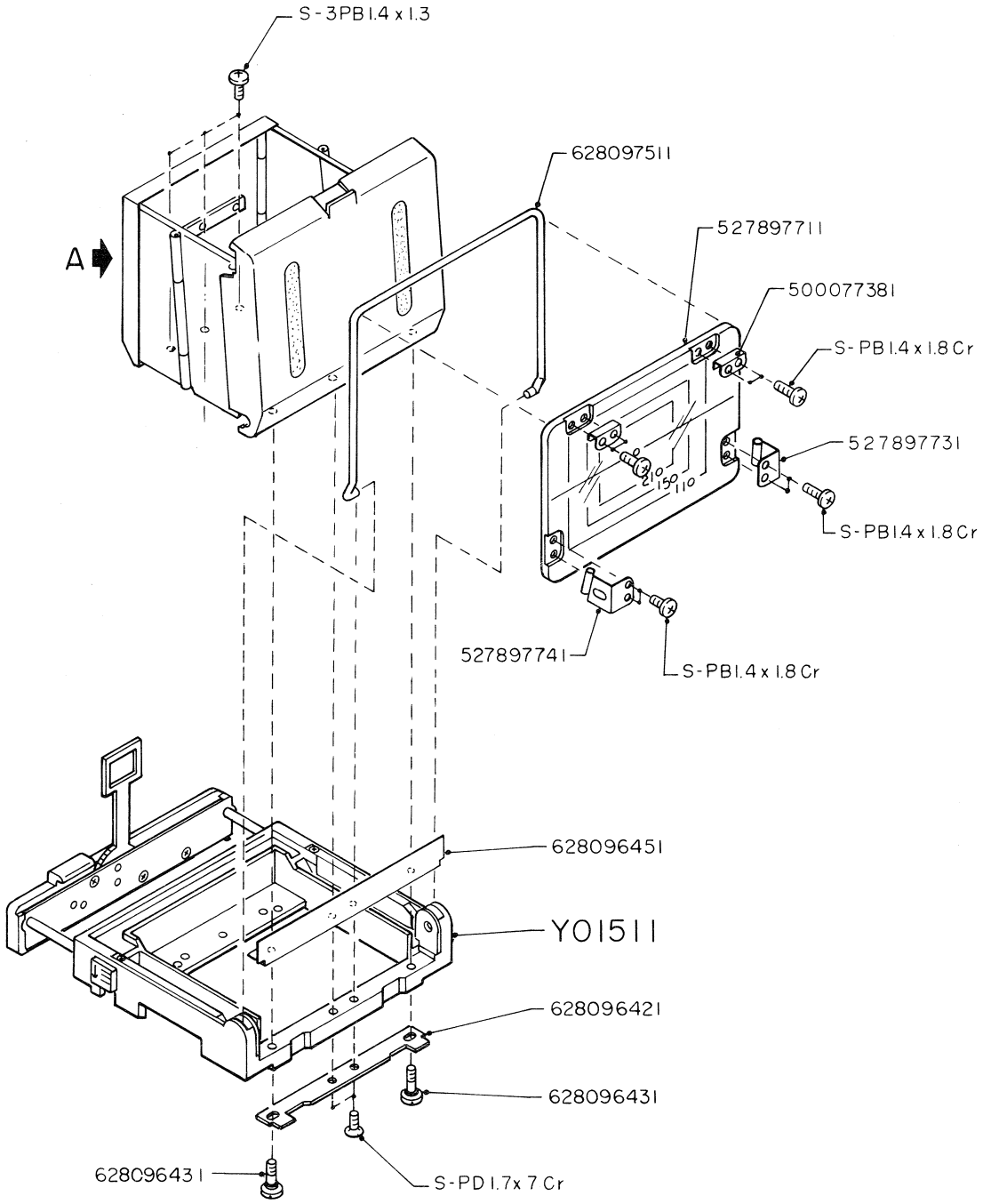
S-3PB1.4 x 1.3
628097511
527897711
500077381
S-PB1.4 x 1.8 Cr
527897731
S-PB1.4 x 1.8 Cr
A
210
150
110
527897741
S-PB1.4 x 1.8 Cr
628096451
Y01511
628096421
628096431
628096431
S-PD1.7x 7 Cr

PARTS LIST

Parts No.	QTY.	Description	部品名称
628096421	1	Leaf spring	F爪バネ
628096431	2	Guide screw	F爪バネガイドネジ
628096451	1	Cover	F前カバー板
628097511	1	Finder frame	通し枠
527897711	1	Field mark	マスク板
527897731	1	Leaf spring	マスク止板(右)
527897741	1	Leaf spring	マスク止板(左)
500077381	2	Leaf spring	マスク止板(上)
Y01511	1	Base frame Ass'y	台枠Ass'y
S-PB1.4×1.8Cr	8	Screw	マスク板止ネジ
S-PD1.7×7Cr	2	Screw	F爪バネ止ネジ
S-3PB1.4×1.3	3	Screw	回転板止ネジ

Detail "A" Hood Cover Ass'y

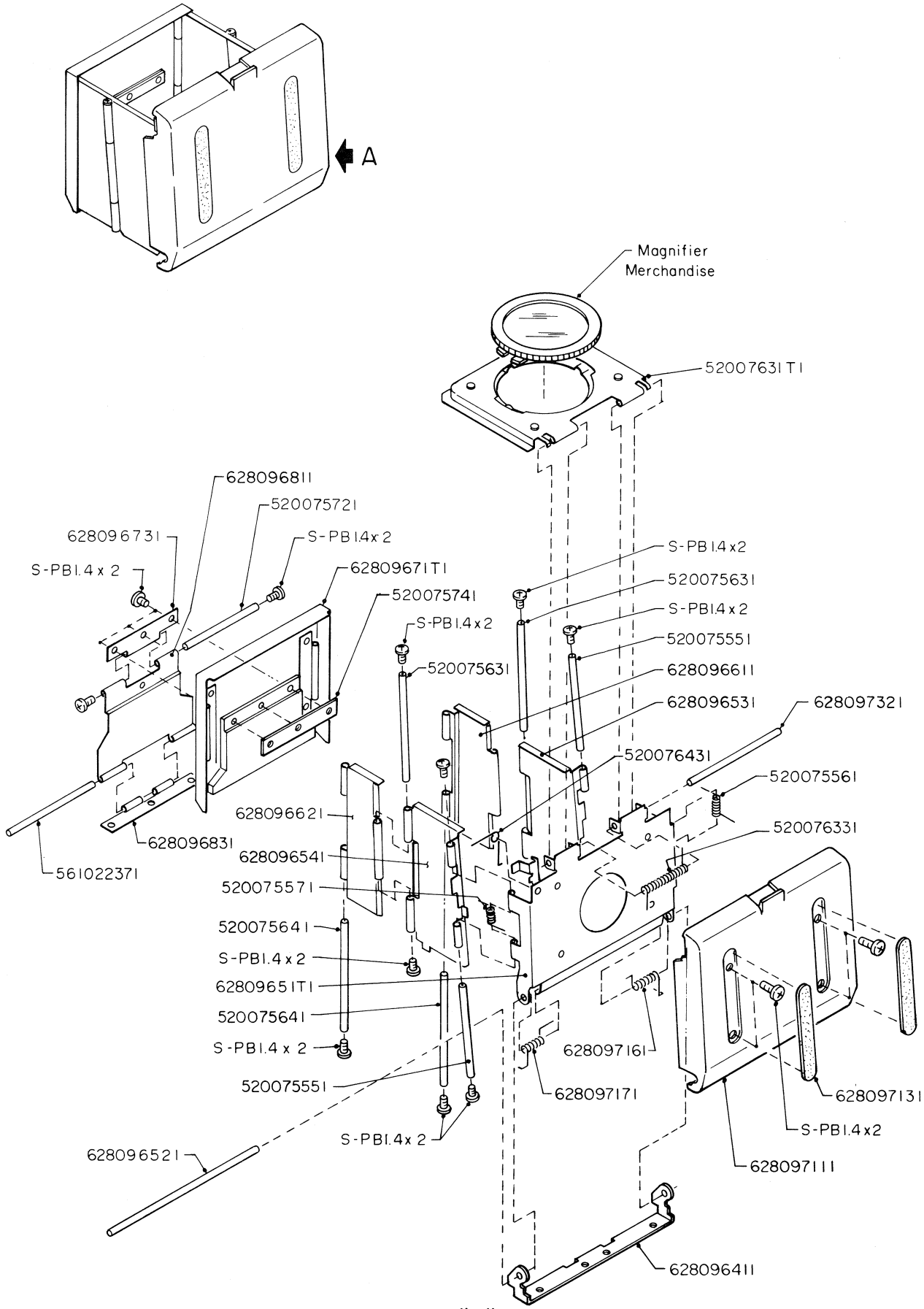

DETAIL "A"

PARTS LIST

Parts No.	QTY.	Description	部品名称
628096411	1	Holder	F前軸板
62809651T1	1	Front frame	F前板
628096521	1	Shaft	通し前板軸
628096531	1	Side Panel	右前フード
628096541	1	Side Panel	左前フード
628096611	1	Side Panel	右中フード
628096621	1	Side panel	左中フード
62809671T1	1	Rear panel	後フード
628096731	1	Hange plate	後フード軸受
628096811	1	Flap plate	回軸板
628096831	1	Hange plate	回転板軸受
628097111	1	Hood cover	Fフタ
628097131	2	Rubber	Fフタカバー板
628097161	1	Spring	Fバネ(右)
628097171	1	Spring	Fバネ(左)
628097321	1	Shaft	ルーペ板軸
520075551	2	Shaft	フード前軸
520075561	1	Spring	前フード右バネ
520075571	1	Spring	前フード左バネ
520075631	2	Shaft	フード中軸
520075641	2	Shaft	フード後軸
520075721	1	Shaft	後フード軸
520075741	1	Plate	後フード軸受止板
52007631T1	1	Magnifying frame Ass'y	ルーペ板Ass'y
520076331	1	Spring	ルーペ板バネ
520076431	1	Spring	ルーペ解除レバーバネ
561022371	1	Shaft	回転板軸
S-PB1.4×2	19	Screw	止ネジ

Y01511 Base Frame Ass'y

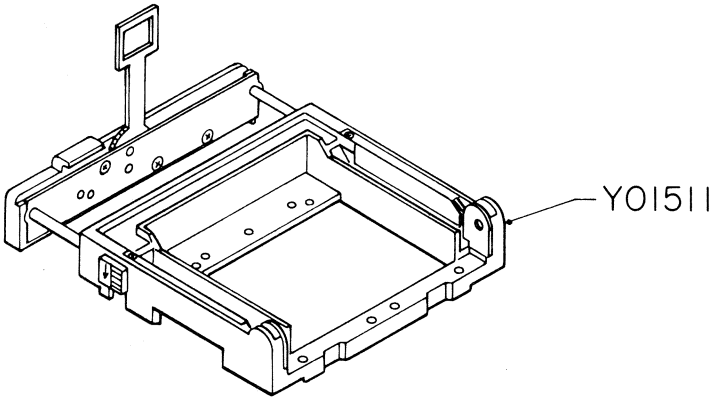

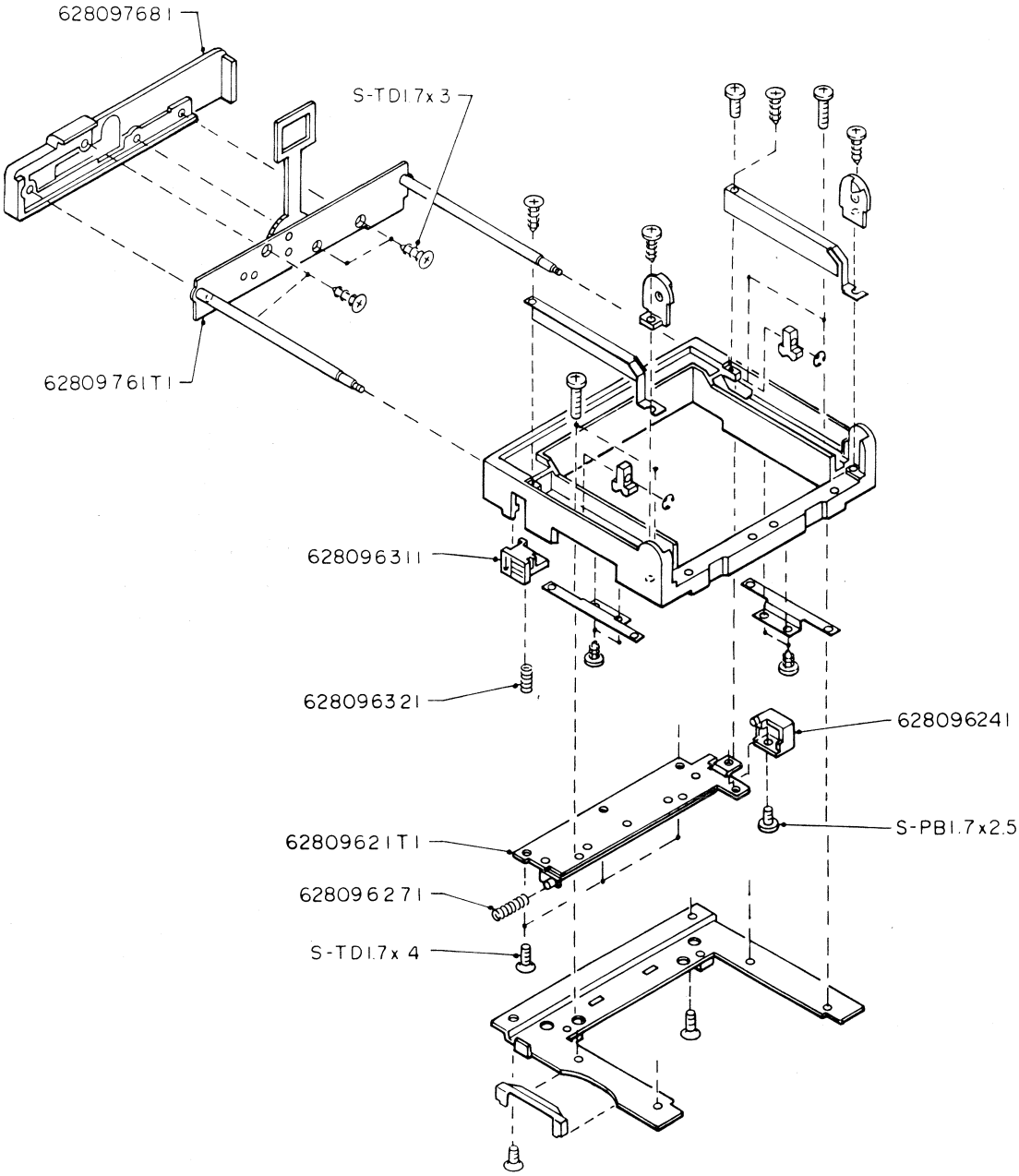

PARTS LIST

Parts No.	QTY.	Description	部品名称
62809621T1	1	Locking plate	ロック爪基板
628096241	1	Knob	ロック爪押し板ボタン
628096271	1	Spring	ロック爪バネ
628096311	1	Knob	ロック解除ボタン
628096321	1	Spring	ロック解除ボタンバネ
62809761T1	1	Viewing frame Ass'y	接眼枠台板Ass'y
628097681	1	Cover	接眼枠カバー
S-PB1.7×2.5	1	Screw	ロック爪ボタンネジ
S-TD1.7×3	4	Screw	接眼枠カバーネジ
S-TD1.7×4	3	Screw	ロック爪基板ネジ

AE Prism Finder N

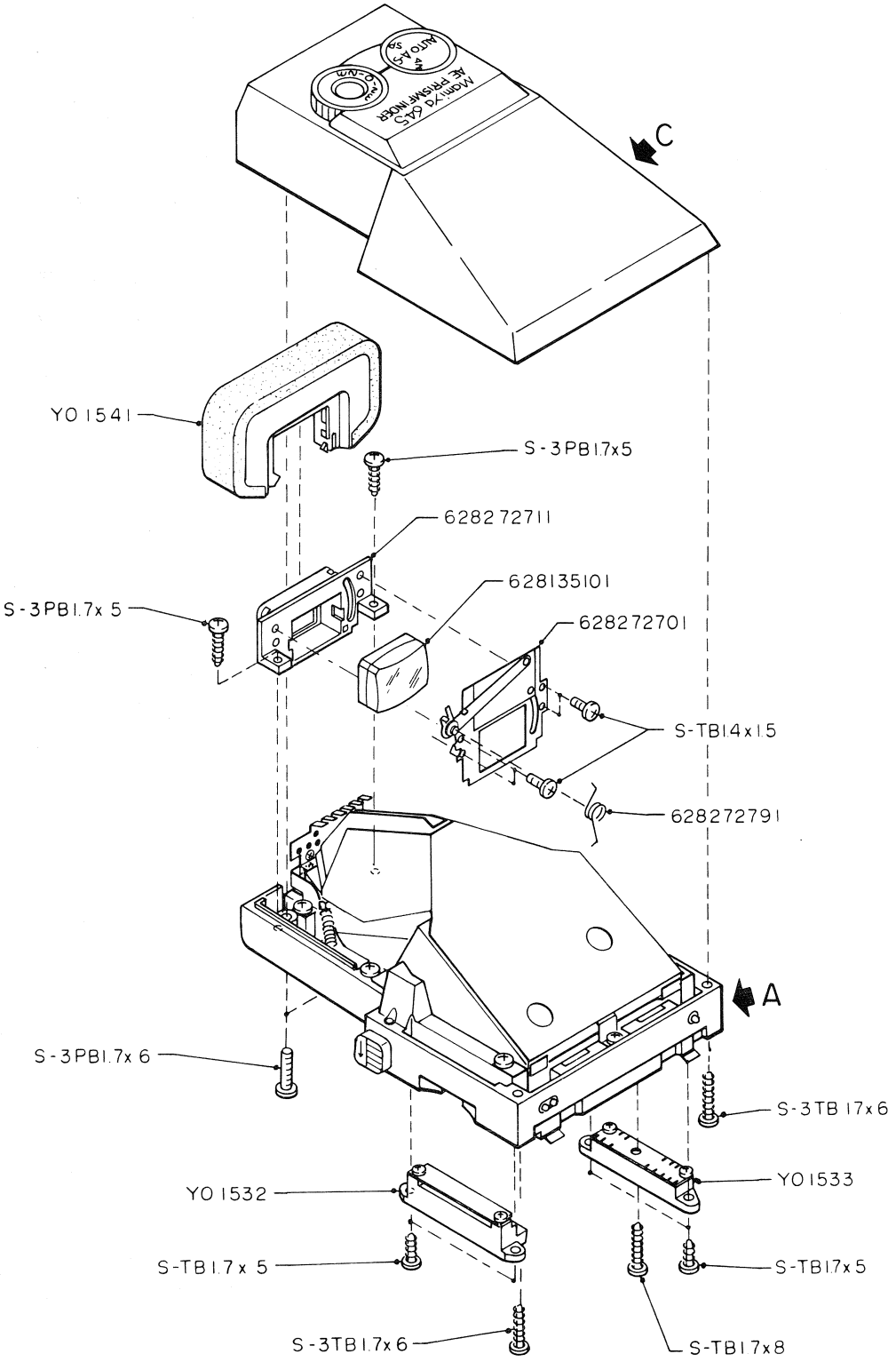
C
YO 1541
S-3PB1.7x5
628272711
628135101
S-3PB1.7x 5
628272701
S-TB1.4x1.5
628272791
A
S-3PB1.7x 6
S-3TB 1.7x6
YO 1532
YO 1533
S-TB1.7x 5
S-TB1.7x5
S-3TB1.7x6
S-TB1.7x8

PARTS LIST

Parts No.	QTY.	Description	部品名称
628272701	1	Eyepiece blind Ass'y	EP基板Ass'y
628272711	1	Eyepiece frame	接眼枠
628272791	1	Spring	EPレバーバネ
628135101	1	Eyepiece lens	ルーペ
Y01532	1	LED base frame Ass'y	LEDプリズム枠Ass'y
Y01533	1	Signal pins housing Ass'y	接点枠Ass'y
Y01541	1	Eye-cup Ass'y	アイカップAss'y
S-TB1.7×5	2	Screw	LEDプリズム枠止ネジ
S-TB1.7×5	2	Screw	接点枠止ネジ
S-TB1.7×8	1	Screw	接点枠止ネジ
S-3PB1.7×6	2	Screw	ファインダーカバー止ネジ
S-3TB1.7×5	2	Screw	接点枠止ネジ
S-3TB1.7×6	2	Screw	ファインダーカバー止ネジ
S-TB1.4×1.5	4	Screw	EP基板止ネジ

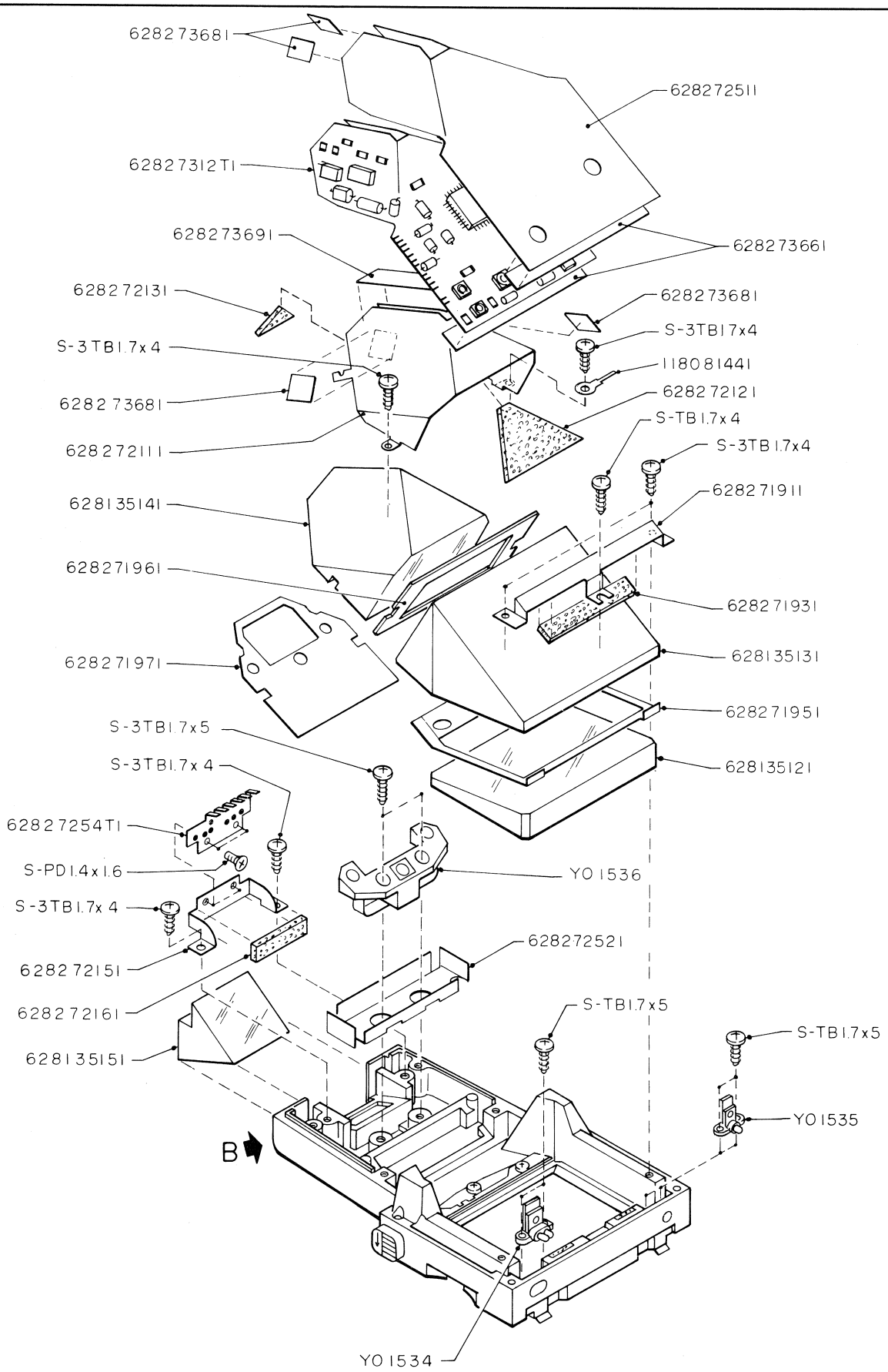
628273681
628272511
628273121T1
628273691
628273661
628272131
628273681
S-3TB1.7x4
S-3TB1.7x4
118081441
628273681
628272121
S-TB1.7x4
628272111
S-3TB1.7x4
628135141
628271911
628271961
628271931
628271971
628135131
628271951
S-3TB1.7x5
S-3TB1.7x4
628135121
628272541T1
S-PD1.4x1.6
Y01536
S-3TB1.7x4
628272521
628272151
628272161
S-TB1.7x5
S-TB1.7x5
628135151
Y01535
B
Y01534

DETAIL "A"

PARTS LIST

Parts No.	QTY.	Description	部品名称
628271911	1	Prism holder	プリズム押え
628271931	1	Cushion	プリズム押えモルト
628271951	1	Spacer A	第一スペーサー
628271961	1	Spacer B	第二スペーサー
628271971	1	Spacer C	第三スペーサー
628272111	1	Prism cover	ダハカバー
628272121	1	Cushion F	ダハカバーダンパー(前)
628272131	1	Cushion R	ダハカバーダンパー(後)
628272151	1	Prism holder	小プリズム押え
628272161	1	Cushion	小プリズム押えモルト
628272511	1	Shield cover U	シールド カバー(上)
628272521	1	Shield cover L	シールド カバー(下)
62827254T1	1	Contact plate	プリント接片基板
62827312T1	1	F.P.C board	AE回路フレキ
628273661	2	Tape	フレキ前テープ
628273681	4	Tape	フレキ後テープ
628273691	1	Tape	ダハカバーテープ
628135121	1	Prism M	長方形プリズム
628135131	1	Prism L	大プリズム
628135141	1	Prism G	ダハプリズム
628135151	1	Prism S	三角小プリズム
118081441	1	Lug plate	ラグ板
Y01534	1	Signal pins housing Ass'y	F左接点台Ass'y
Y01535	1	Signal pin housing Ass'y	F右接点台Ass'y
Y01536	1	SPD holder Ass'y	受光枠Ass'y
S-TB1.7×4	1	Screw	プリズム押え前止ネジ
S-TB1.7×5	2	Screw	F左接点台止ネジ
S-TB1.7×5	2	Screw	F右接点台止ネジ
S-3TB1.7×4	2	Screw	プリズム押え止ネジ
S-3TB1.7×4	2	Screw	ダハカバー止ネジ
S-3TB1.7×4	2	Screw	小プリズム押え止ネジ
S-3TB1.7×5	2	Screw	受光枠止ネジ
S-PD1.4×1.6	2	Screw	プリズム接片基板止ネジ

Detail "B" Base Frame Ass'y

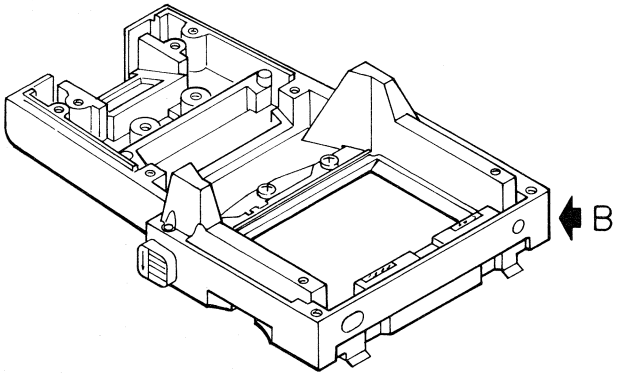

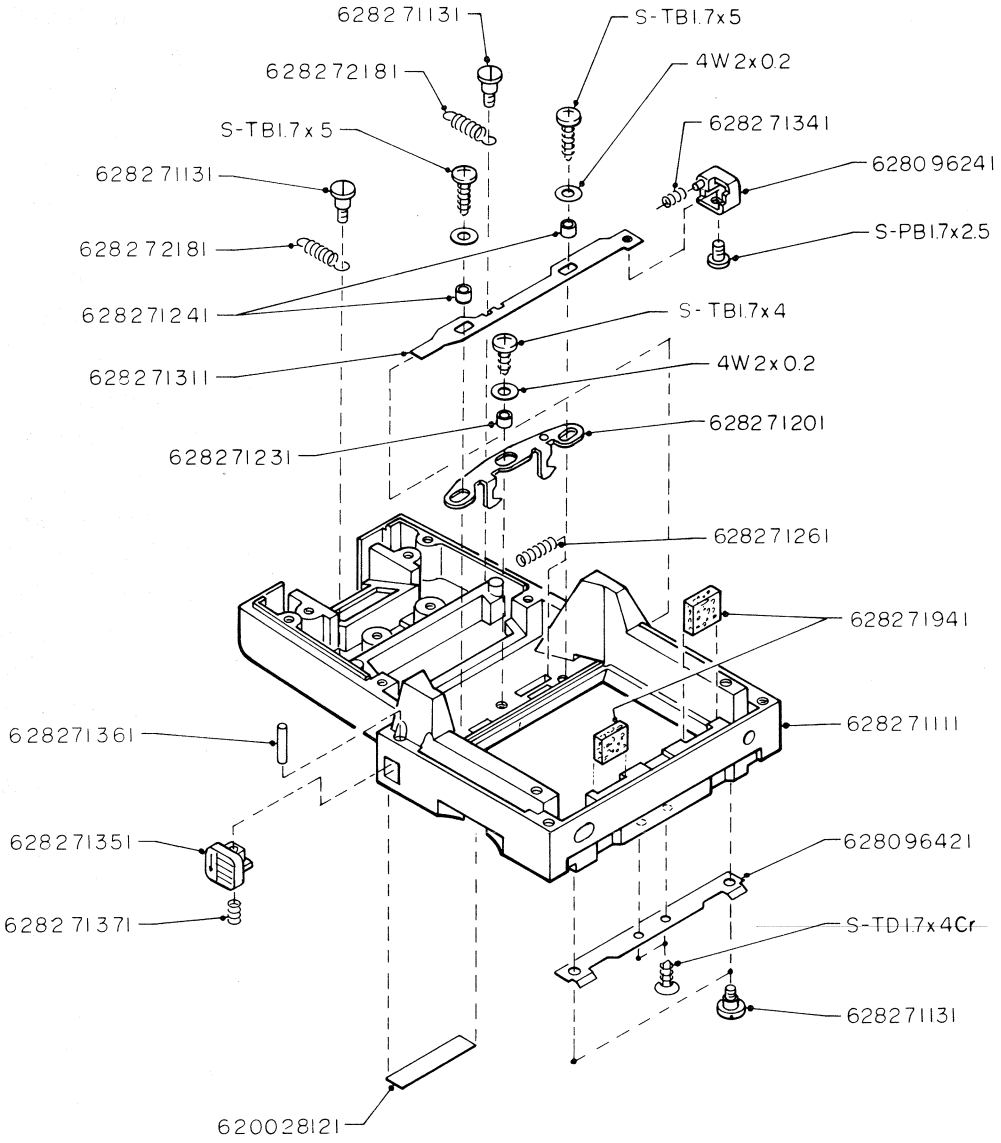

DETAIL "B"

PARTS LIST

Parts No.	QTY.	Description	部品名称
628271111	1	Base plate	ファインダー台枠
628271131	4	Guide screw	F枠バネガイド
628271201	1	Lock lever	ロックレバー
628271231	1	Collar	ロックレバーガイド(短)
628271241	2	Collar	ロックレバーガイド(長)
628271261	1	Spring	ロックレバーバネ
628271311	1	Release lever	ロック解除レバー
628271341	1	Spring	ロック解除ボタンバネ
628271351	1	Knob	ストップツマミ
628271361	1	Shaft	ストップツマミガイド
628271371	1	Spring	ストップツマミバネ
628271941	2	Cushion	長方形ブリズムモルト
628272181	2	Spring	ダハカバーバネ
620028121	1	Number plate	No.プレート
628096241	1	Knob	ロック解除ボタン
628096421	1	Leaf spring	F爪バネ
S-PB1.7×2.5	1	Screw	ロック解除ボタン止ネジ
S-TB1.7×4	1	Screw	ロックレバー止ネジ
S-TB1.7×5	2	Screw	ロックレバー止ネジ
S-TD1.7×4Cr	2	Screw	F爪バネ止ネジ
4W2×0.2	3	Washer	ロックレバーワッシャー

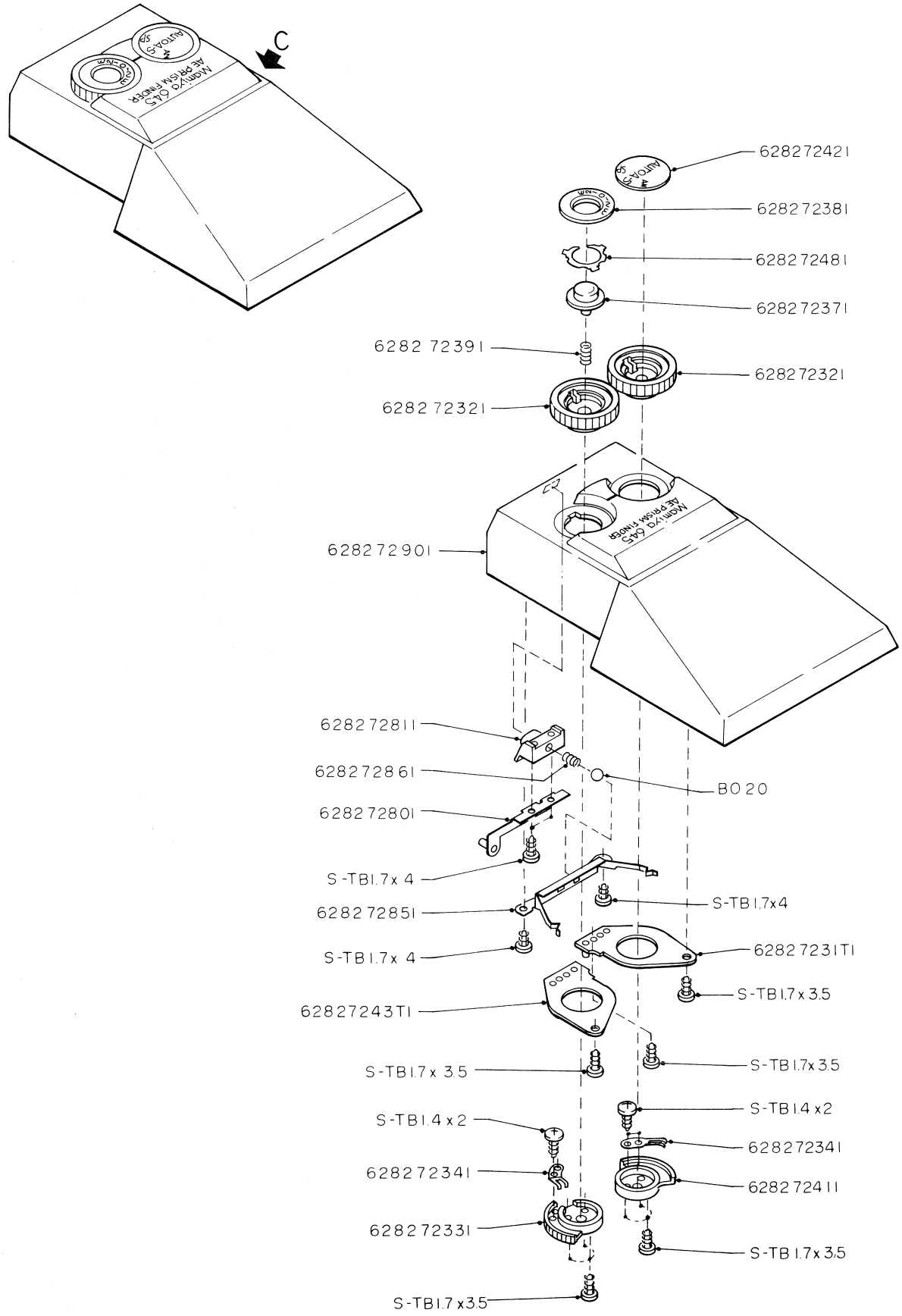
C
Mamiya 645
AE PRISM FINDER
AUTO-S
SP
628272421
628272381
628272481
628272371
6282 72391
628272321
6282 72321
628272901
628272811
628272861
B020
628272801
S-TB1.7x 4
S-TB1.7x4
628272851
S-TB1.7x 4
6282 72311T1
S-TB1.7x 3.5
62827243T1
S-TB1.7x 3.5
S-TB1.7x3.5
S-TB1.4 x2
S-TB1.4 x2
628272341
628272341
6282 72411
628272331
S-TB 1.7x 3.5
S-TB1.7x3.5

DETAIL "C"

PARTS LIST

Parts No.	QTY.	Description	部品名称
62827231T1	1	Contact pin board	ASプリント板
628272321	2	Dial	ダイヤル
628272331	1	Holder	CVブラシ台
628272341	2	Brush	CVブラシ
628272371	1	CV button	CVダイヤルボタン
628272381	1	Exposure scale	CVダイヤル飾リ
628272391	1	Spring	CVダイヤルバネ
628272411	1	Holder	ASブラシ台
628272421	1	Selector plate	ASダイヤル飾リ
62827243T1	1	Contact pin board	CVプリント板
628272481	1	Leaf spring	CVダイヤルボタン押え
628272801	1	Lever	EP開閉板
628272811	1	Knob	EPツマミ
628272851	1	Click plate	クリック板
628272861	1	Spring	クリックバネ
628272901	1	Finder cover	ファインダーカバー
S-TB1.4×2	4	Screw	CVブラシネジ
S-TB1.7×3.5	2	Screw	CVプリント板止ネジ
S-TB1.7×3.5	1	Screw	ASプリント板止ネジ
S-TB1.7×3.5	3	Screw	CVブラシ台止ネジ
S-TB1.7×3.5	3	Screw	ASブラシ台止ネジ
S-TB1.7×4	2	Screw	EPツマミネジ
S-TB1.7×4	2	Screw	クリック板ネジ
B020	1	Steel ball(φ2)	クリックボール

Prism Finder N

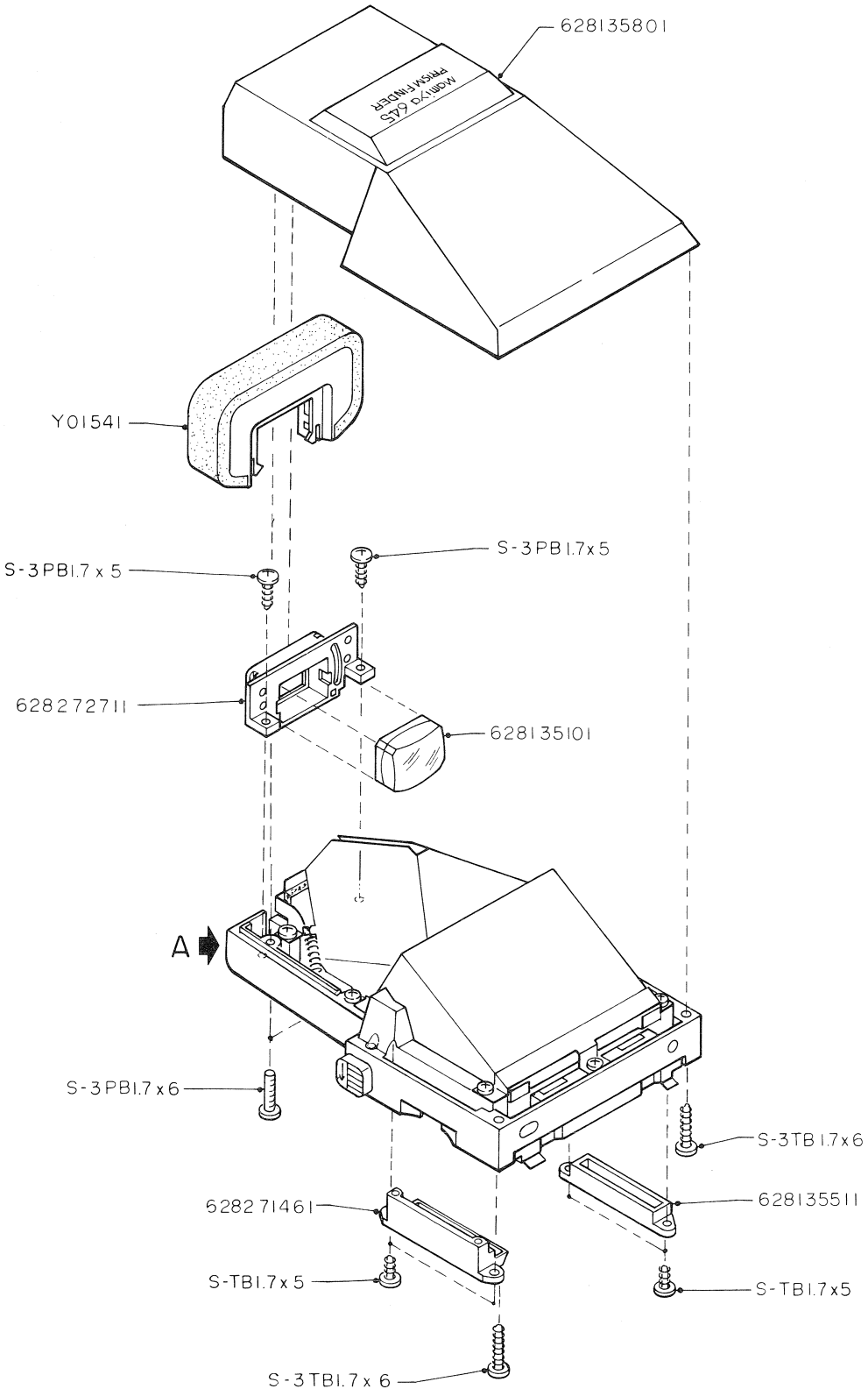
628135801
MAMIYA 645
PRISM FINDER
Y01541
S-3PB1.7x5
S-3PB1.7x5
628272711
628135101
A
S-3PB1.7x6
S-3TB1.7x6
628271461
628135511
S-TB1.7x5
S-TB1.7x5
S-3TB1.7x6

PARTS LIST

Parts No.	QTY.	Description	部品名称
628135101	1	Eyepiece lens	ルーペー
628135511	1	Holder	化粧枠
628135801	1	Finder cover	ファインダーカバー
628271461	1	Frame	LEDプリズム枠
628272711	1	Eyepiece frame	接眼枠
Y01541	1	Eye-cup Ass'y	アイカップAss'y
S-TB1.7×5	2	Screw	LEDプリズム枠止ネジ
S-TB1.7×5	2	Screw	化粧枠止ネジ
S-3PB1.7×6	2	Screw	ファインダーカバー止ネジ
S-3TB1.7×5	2	Screw	接眼枠止ネジ
S-3TB1.7×6	2	Screw	ファインダーカバー止ネジ

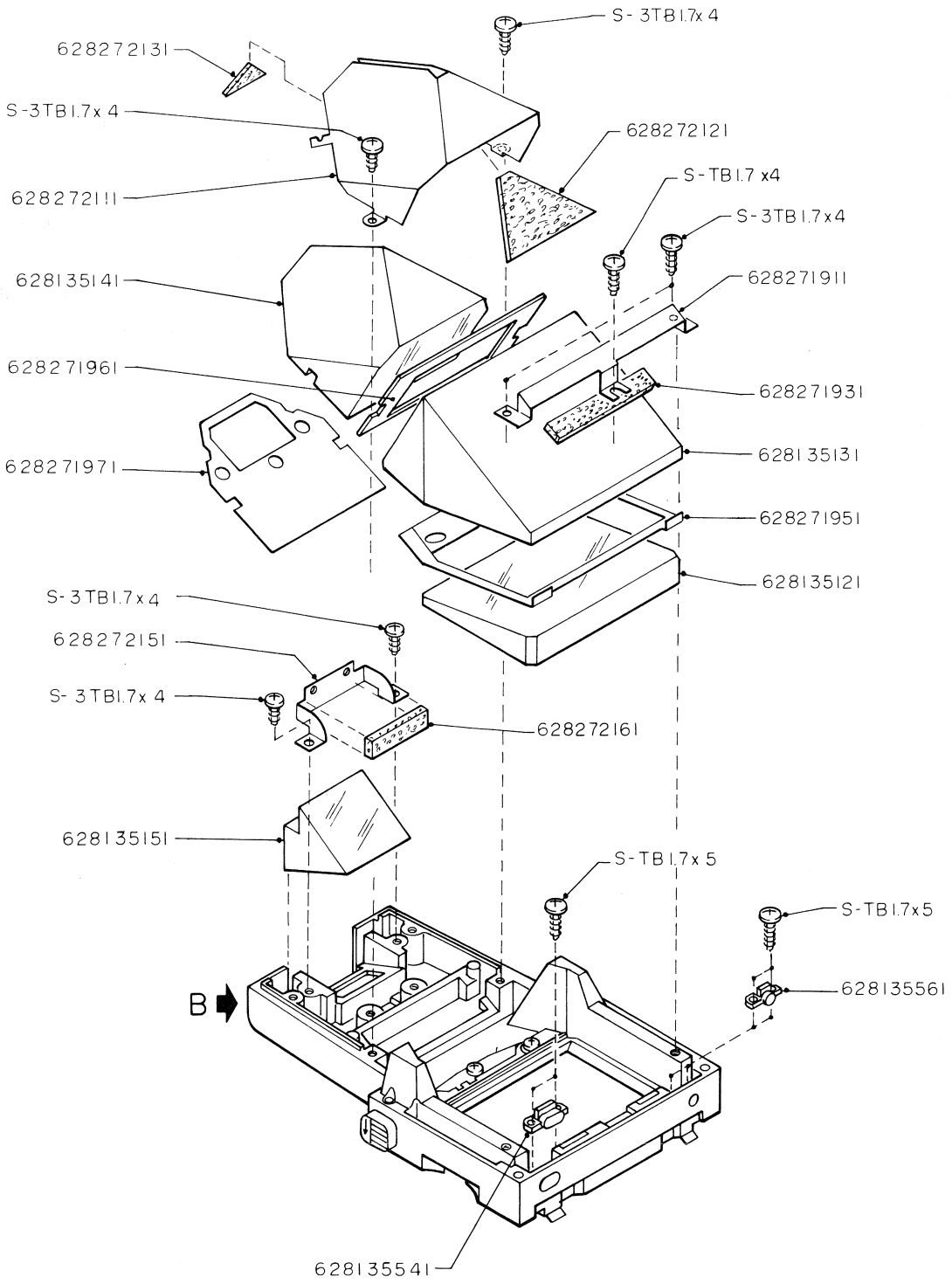
S-3TB1.7x4
628272131
S-3TB1.7x4
628272121
628272111
S-TB1.7x4
S-3TB1.7x4
628135141
628271911
628271961
628271931
628271971
628135131
628271951
628135121
S-3TB1.7x4
628272151
S-3TB1.7x4
628272161
628135151
S-TB1.7x5
S-TB1.7x5
628135561
B
628135541

DETAIL "A"

PARTS LIST

Parts No.	QTY.	Description	部品名称
628135121	1	Prism M	長方形プリズム
628135131	1	Prism L	大プリズム
628135141	1	Prism G	ダハプリズム
628135151	1	Prism S	小プリズム
628135541	1	Cover L	化粧台 左
628135561	1	Cover R	化粧台 右
628271911	1	Prism holder	プリズム押え
628271931	1	Cushion	プリズム押えモルト
628271951	1	Spacer A	第一スペーサー
628271961	1	Spacer B	第二スペーサー
628271971	1	Spacer C	第三スペーサー
628272111	1	Prism cover	ダハカバー
628272121	1	Cushion F	ダハカバー ダンパー(前)
628272131	1	Cushion R	ダハカバー ダンパー(後)
628272151	1	Prism holder	小プリズム押え
628272161	1	Cushion	小プリズム押えモルト
S-TB1.7×4	1	Screw	プリズム押え前止ネジ
S-TB1.7×5	2	Screw	化粧台 左止ネジ
S-TB1.7×5	2	Screw	化粧台 右止ネジ
S-3TB1.7×4	2	Screw	プリズム押え止ネジ
S-3TB1.7×4	2	Screw	ダハカバー止ネジ
S-3TB1.7×4	2	Screw	小プリズム押え止ネジ

Detail "B" Base Frame Ass'y

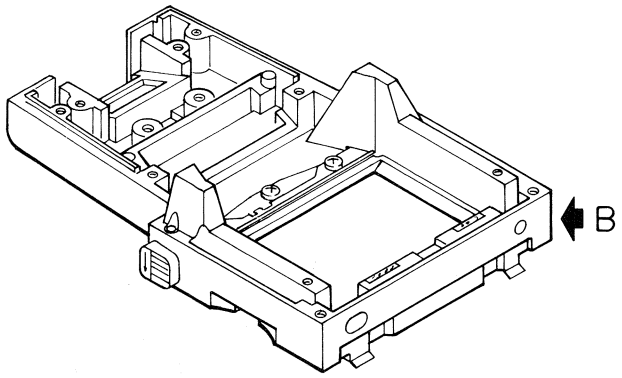

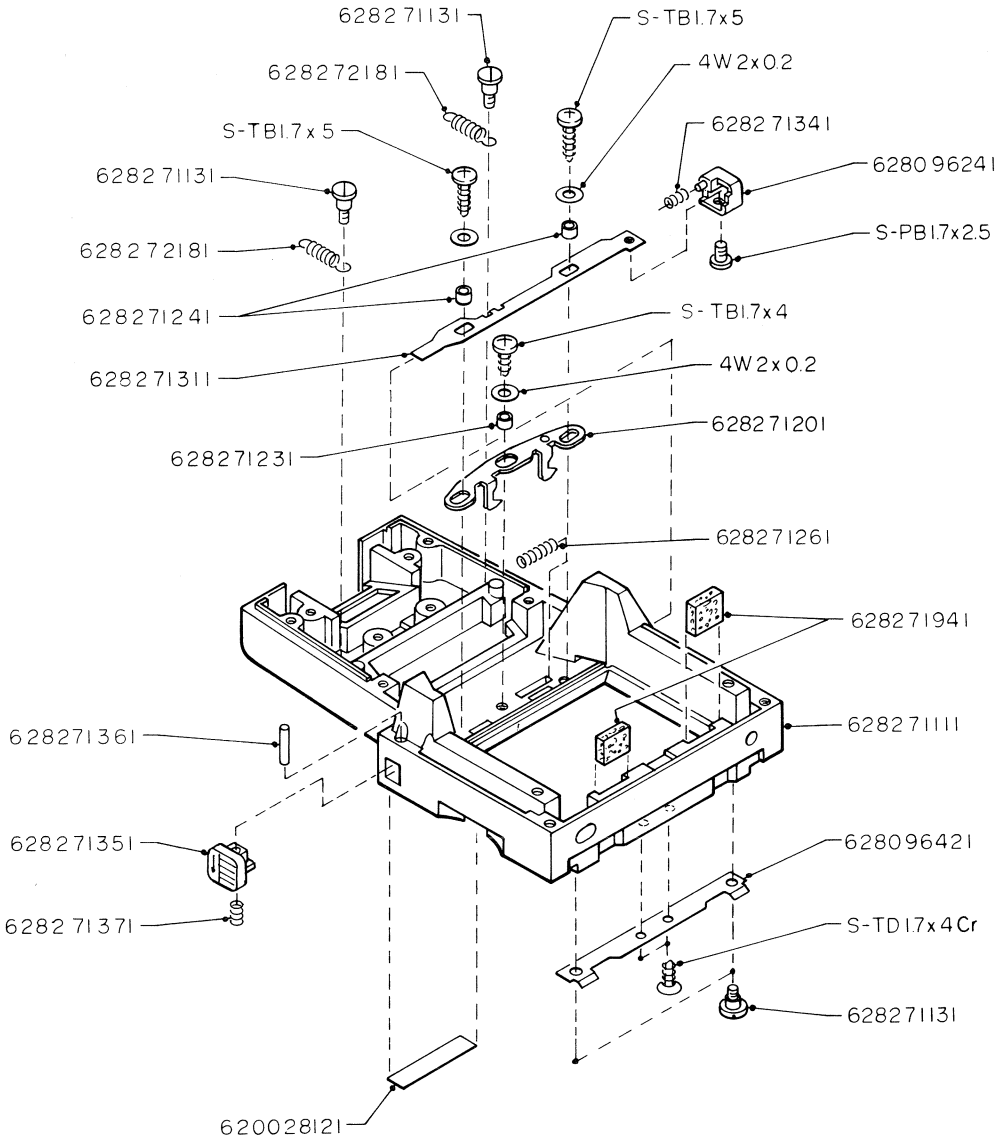

DETAIL "B"

PARTS LIST

Parts No.	QTY.	Description	部品名称
628271111	1	Base plate	ファインダー台枠
628271131	4	Guide screw	F枠バネ止ネジ
628271201	1	Lock lever	ロックレバー
628271231	1	Collar	ロックレバーガイド(短)
628271241	2	Collar	ロックレバーガイド(長)
628271261	1	Spring	ロックレバーバネ
628271311	1	Release lever	ロック解除レバー
628271341	1	Spring	ロック解除ボタンバネ
628271351	1	Knob	ストップツマミ
628271361	1	Shaft	ストップツマミガイド
628271371	1	Spring	ストップツマミバネ
628271941	2	Cushion	長方形プリズムモルト
628272181	2	Spring	ダハカバーバネ
620028121	1	Number plate	No.プレート
628096241	1	Knob	ロック解除ボタン
628096421	1	Leaf spring	F爪バネ
S-PB1.7×2.5	1	Screw	ロック解除ボタン止ネジ
S-TB1.7×4	1	Screw	ロックレバー止ネジ
S-TB1.7×5	2	Screw	ロックレバー止ネジ
S-TD1.7×4Cr	2	Screw	F爪バネ止ネジ
4W2×0.2	3	Washer	ロックレバーワッシャー

Mamiya

PARTS CATALOG

M645 SUPER

80mm f/2.8 N Lens
55mm f/2.8 N Lens
150mm f/3.5 N Lens

PC85-M645S-401

M645 SUPER

80mm f/2.8 N Lens

80mm f/2.8 N Lens Ass'y

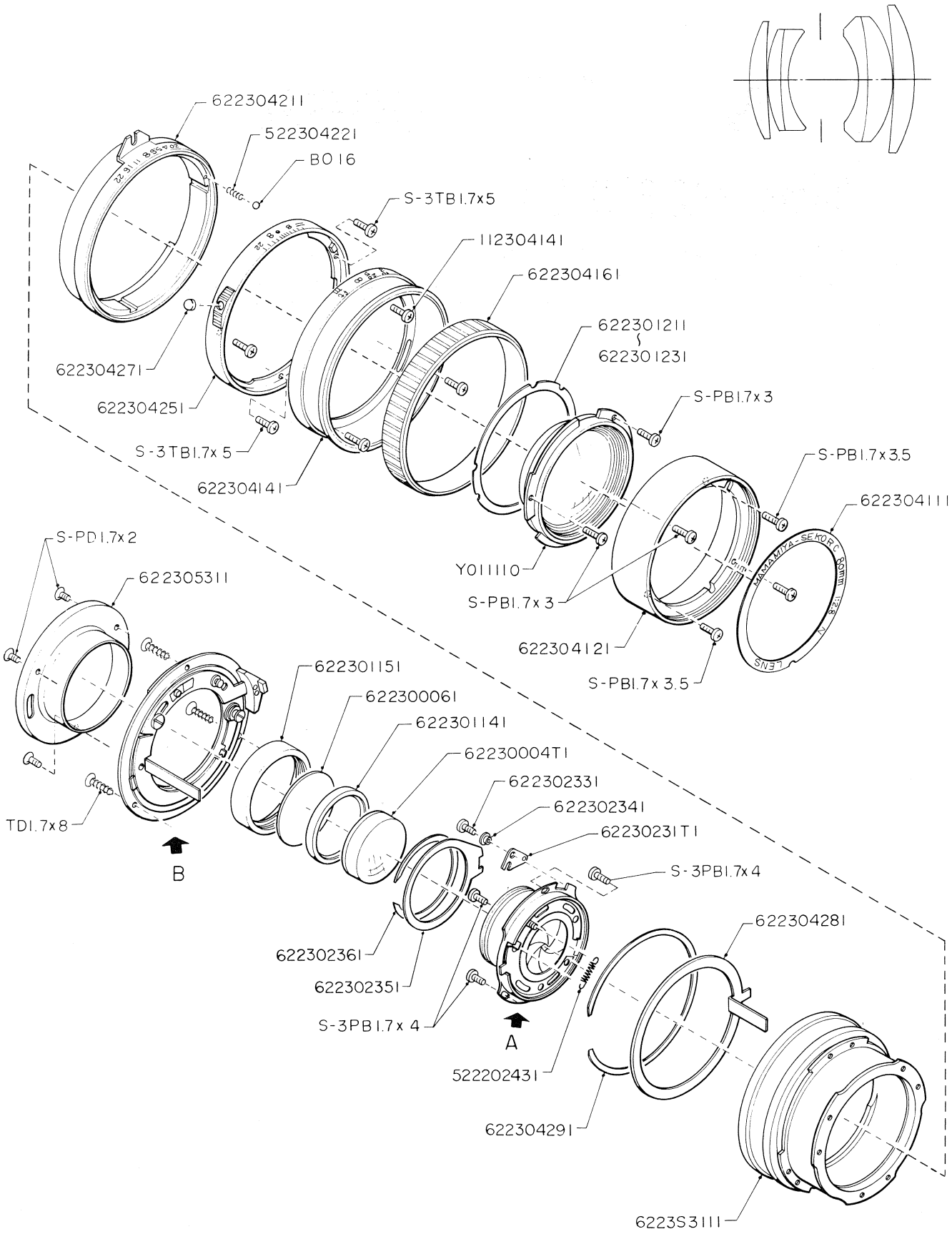

PARTS LIST

Parts No.	QTY.	Description	部品名称
62230004T1	1	#4&#5 Lens	#4,#5レンズ
622300061	1	#6 Lens	#6レンズ
622301141	1	Separator ring	後間隔リング
622601151	1	Retaining ring	後押え
622301211	0to2	Washer(t=0.1)	間隔ワッシャ(t=0.1)
622301221	0to2	Washer(t=0.05)	間隔ワッシャ(t=0.05)
622301231	0to2	Washer(t=0.2)	間隔ワッシャ(t=0.2)
62230231T1	1	Aperture cam	絞りクランク
622302331	1	Shaft	絞りクランク軸
622302341	1	Collar	絞りリングカラー
622302351	1	Aperture control cam	絞りカム
622302361	1	Retainer	絞りカム押え
6223S3111	1	Helicoid Ass'y	ヘリコイドAss'y
622304111	1	Name ring	セコール銘板
622304121	1	Filter ring	フィルターリング
622304141	1	Focusing ring	キョリワ
622304161	1	Rubber grip	キョリワ バンド
622304211	1	Aperture ring	絞りリング
622304251	1	Indication ring	深度リング
622304271	1	Red dot	取付指標
622304281	1	Cam ring	カムまわし
622304291	1	Retainer	カムまわし押え
622305311	1	Mounting cover	バヨネカバー
522202431	1	Spring	絞りバネ
522304221	1	Spring	クリックバネ
112304141	3	Screw	キョリワ止バネ
Y011110	1	Front lens Ass'y	前レンズAss'y
S-PB1.7×3	3	Screw	前枠止ネジ
S-PB1.7×3.5	3	Screw	フィルターリング止ネジ
S-3PB1.7×4	3	Screw	絞りケース止ネジ
S-3TB1.7×5	3	Screw	深度リング止ネジ
S-PD1.7×2	3	Screw	バヨネカバー止ネジ
TD1.7×8	3	Screw	マウント止ネジ
B016	1	Steel ball(φ1/16)	絞りリングクリックボール

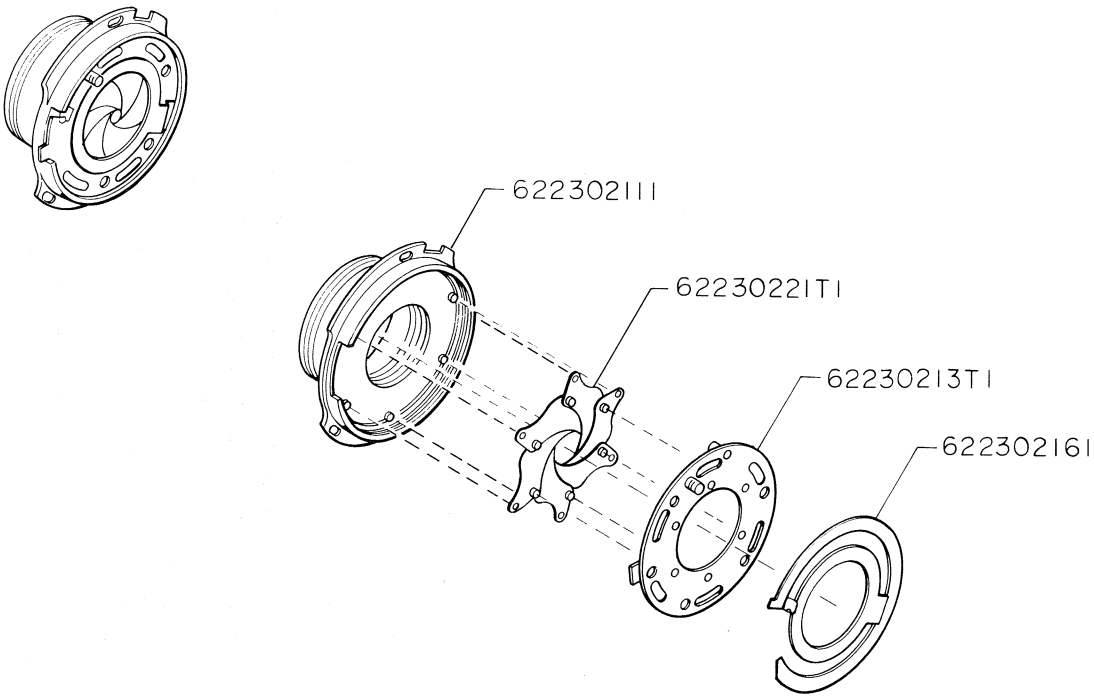

DETAIL "A"

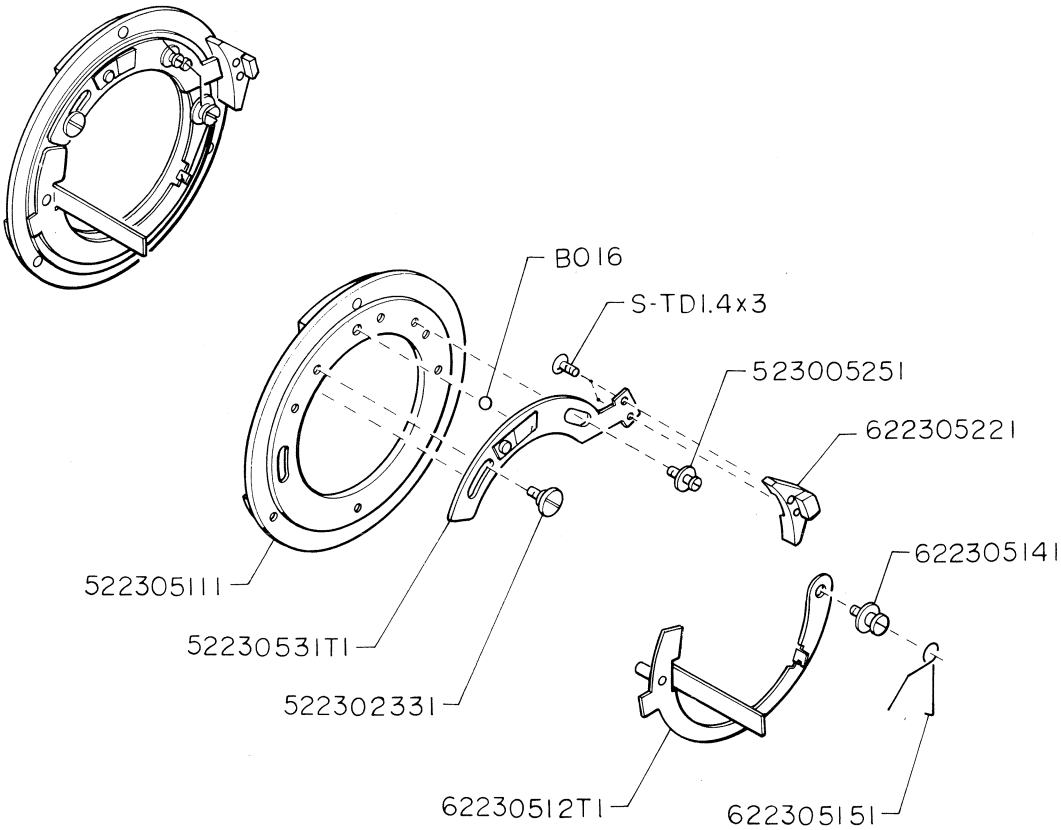

DETAIL "B"

PARTS LIST

Parts No.	QTY.	Description	部品名称
622302111	1	Diaphragm frame	絞りケース
62230213T1	1	Securing ring	キクAss'y
622302161	1	Retaining ring	キク押え
62230221T1	6	Diaphragm blade	絞り羽根
62230512T1	1	Operating laver	作動レバー
622305141	1	Shaft	作動レバー軸
622305151	1	Spring	作動レバーバネ
622305221	1	AM changing knob	切替ツマミ
522302331	1	Shaft	切替板ネジ
522305111	1	Mounting ring	マウント
52230531T1	1	Changing lever	切替板
523005251	1	Shoulder screw	切替板ネジ
S-TD1.4×3	2	Screw	切替ツマミ止ネジ
B016	1	Steel ball(φ1/16)	切替ボール

55mm f/2.8 N Lens

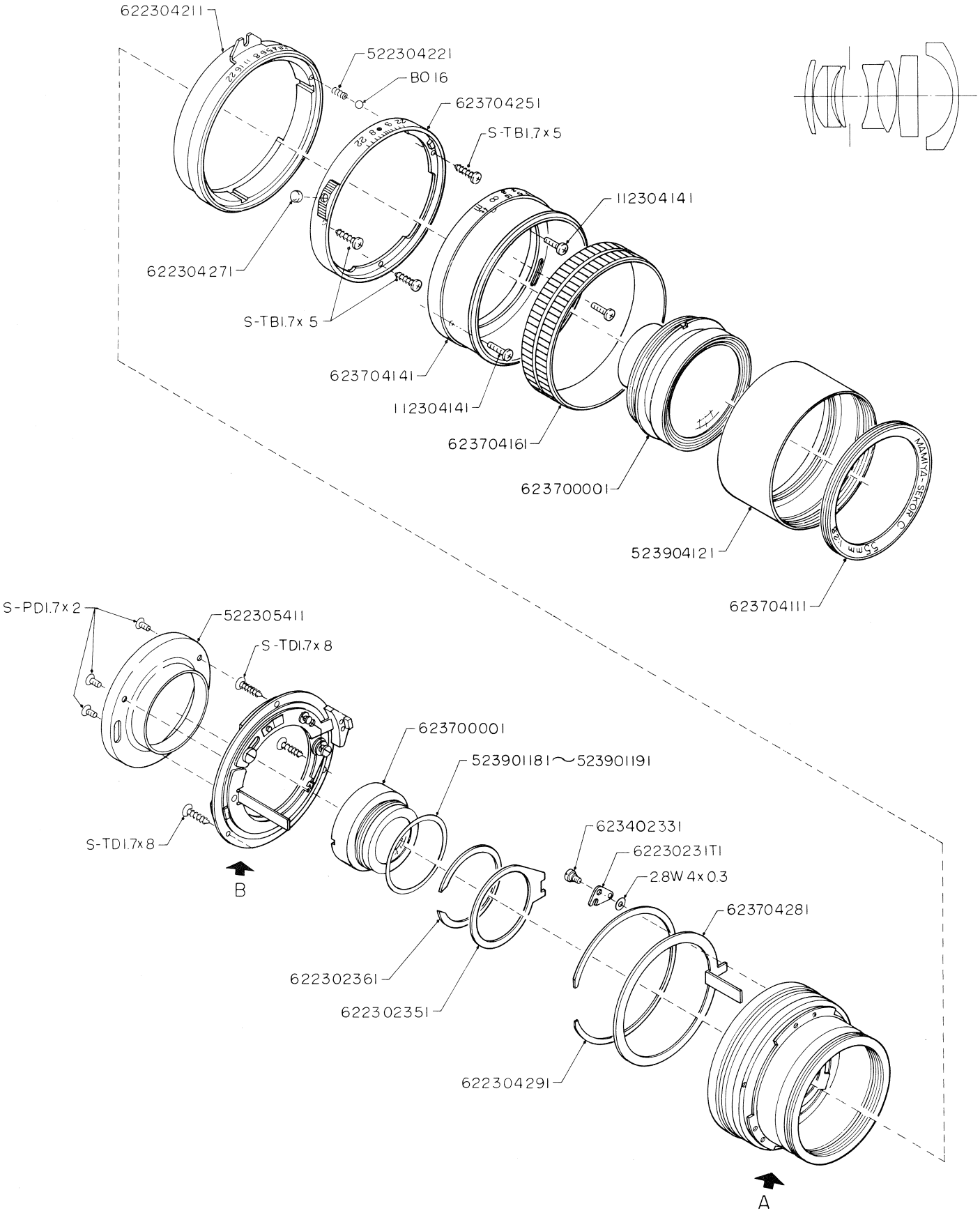
622304211
522304221
BO 16
623704251
S-TB1.7x5
112304141
622304271
S-TB1.7x 5
623704141
112304141
623704161
623700001
523904121
623704111
MAMIYA-SEKOR C
S-PD1.7x 2
522305411
S-TD1.7x 8
623700001
523901181～523901191
S-TD1.7x 8
B
623402331
622302311
2.8W 4x 0.3
623704281
622302361
622302351
622304291
A

PARTS LIST

Parts No.	QTY.	Description	部品名称
623700001	1	Lens Ass'y	前,後レンズAss'y
623704111	1	Name ring	セコール リング
623704141	1	Filter ring	キヨリワ
623704161	1	Rubber grip	キヨリワバンド
623704251	1	Indication ring	深度リング
623704281	1	Cam ring	カムまわし
62230231T1	1	Aperture cam	絞りクランク
622302351	1	Aperture control cam	絞りカム
622302361	1	Retainer	絞りカム押え
622304211	1	Aperture ring	絞りリング
622304271	1	Red dot	取付指標
622304291	1	Retainer	カムまわし押え
623402331	1	Shoulder screw	絞りクランク軸
522304221	1	Spring	クリックバネ
522305411	1	Mounting cover	バヨネカバー
523901181	0～2	Washer(t=0.1)	間隔調整ワッシャ
523901191	0～2	Washer(t=0.05)	間隔調整ワッシャ
523904121	1	Filter ring	フィルターリング
112304141	3	Screw	キヨリワ止ネジ
PD1.7×2	3	Screw	バヨネカバー止ネジ
S-TB1.7×5	3	Screw	深度リング止ネジ
S-TD1.7×8	3	Screw	マウント止ネジ
2.8W4×0.3	1	Washer	絞りクランクワッシャ
B016	1	Stell ball(φ1/16")	クリックボール

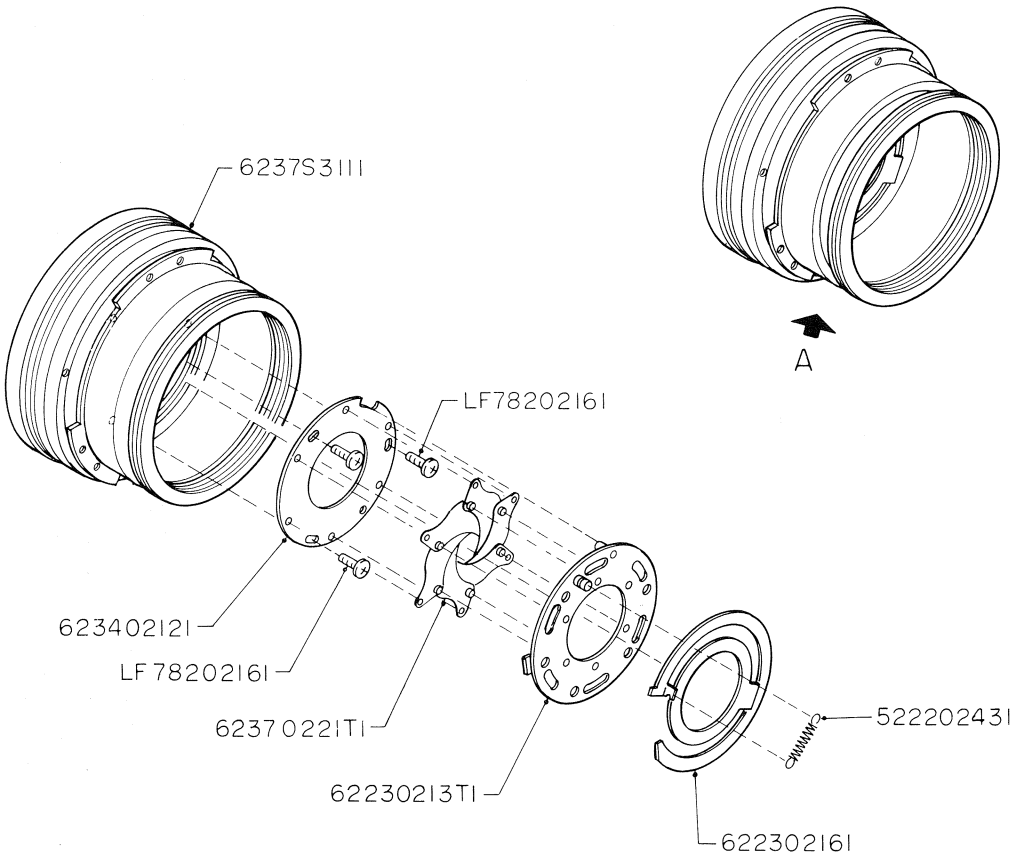

DETAIL "A"

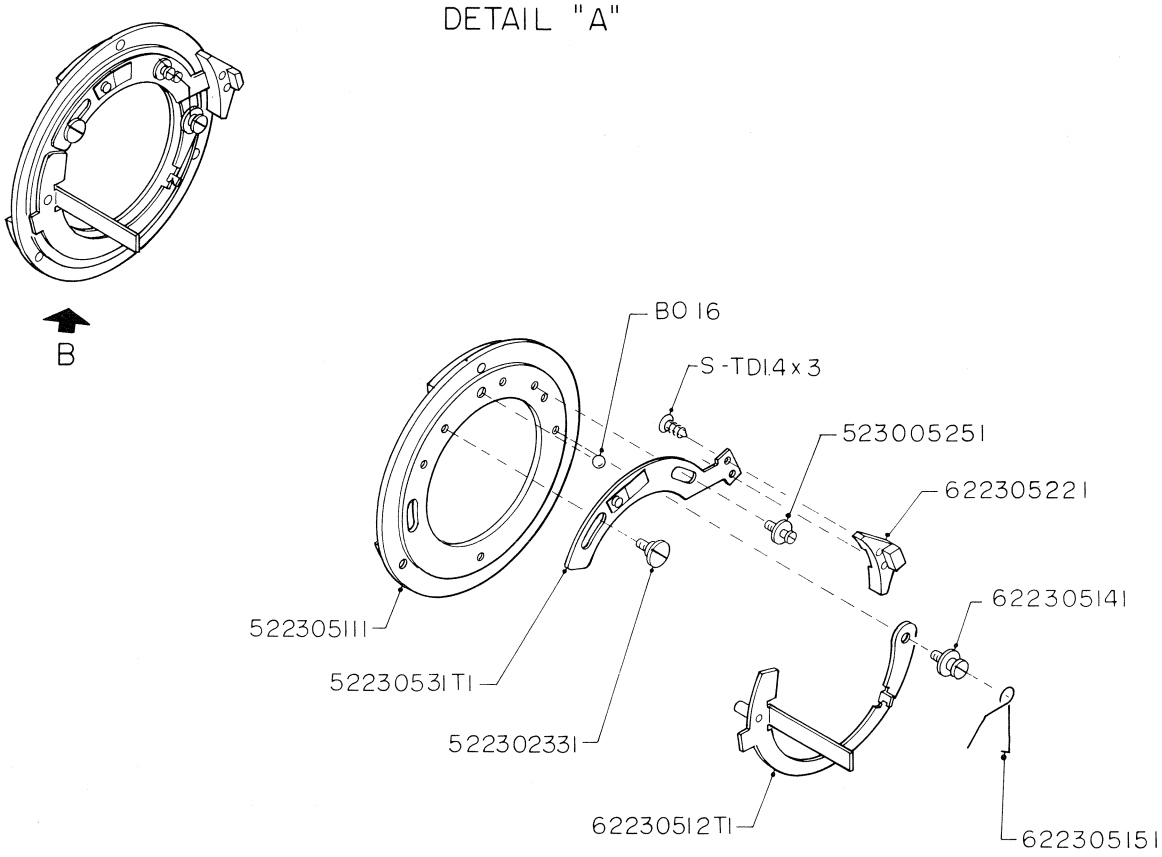

DETAIL "B"

Parts No.	QTY.	Description	部品名称
62370221T1	6	Diaphragm blade	絞り羽根
6237S3111	1	Helicoid Ass'y	ヘリコイド Ass'y
62230213T1	1	Securing ring	キクAss'Y
622302161	1	Retaining ring	キク押え
623402121	1	Operating ring	羽根座
522202431	1	Spring	絞りバネ
LF78202161	3	Screw	羽根座止ネジ
62230512T1	1	Operating lever	作動レバー
622305141	1	Shaft	作動レバー軸
622305151	1	Spring	作動レバーバネ
622305221	1	AM changing Knob	切替ツマミ
522302331	1	Shaft	切替板ネジ
522305111	1	Mounting ring	マウント
52230531T1	1	Changing lever	切替板
523005251	1	Shouder screw	切替板ネジ
S-TD1.4×3	2	Screw	切替ツマミ止ネジ
B016	1	Steel ball(φ1/16")	切替ボール

150mm f/3.5 N Lens

150mm f/3.5N Lens Ass'y

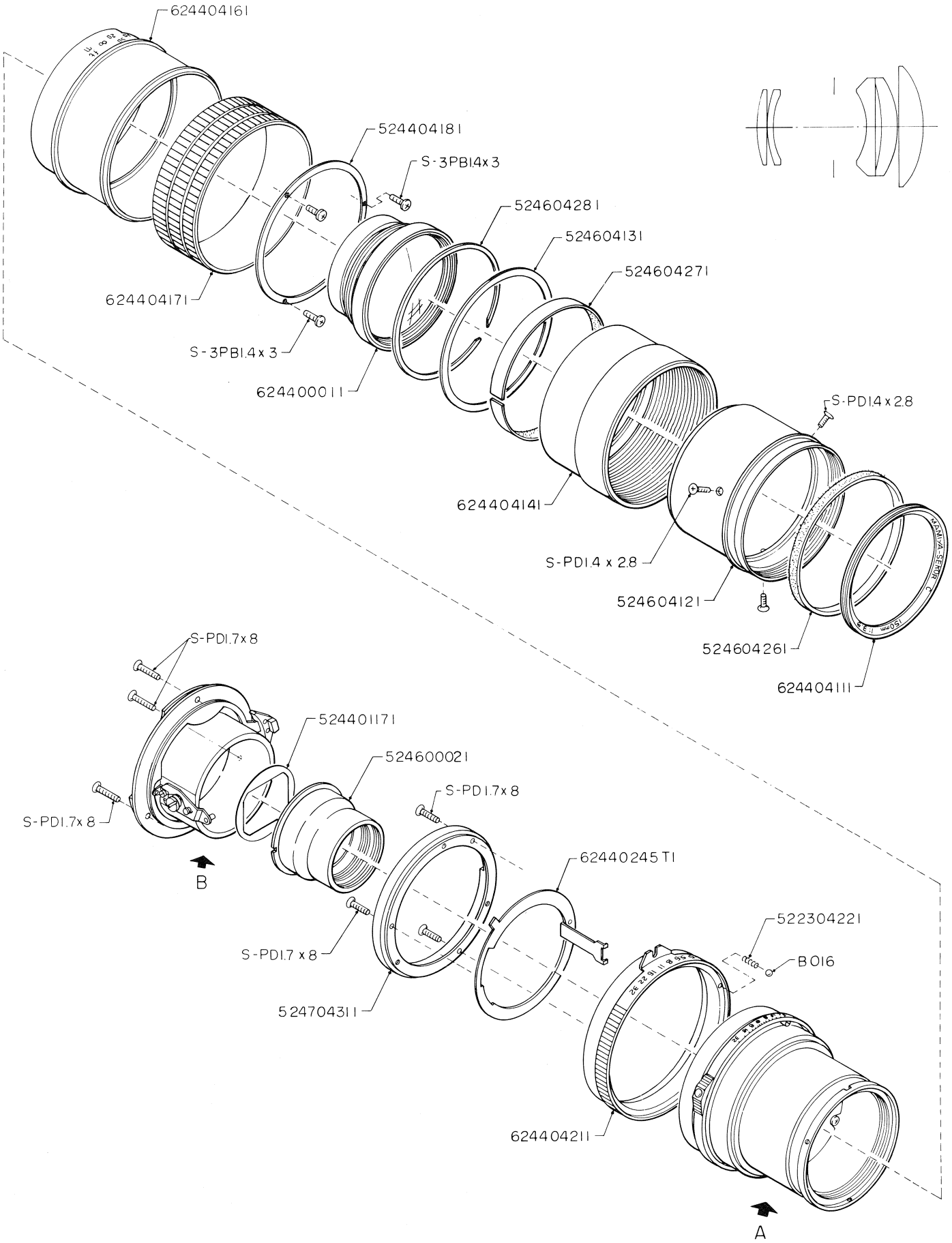

PARTS LIST

Parts No.	QTY.	Description	部品名称
624400011	1	Front Lens Ass'y	前レンズAss'y
62440245T1	1	Cam ring	カムまわしリング
624404111	1	Name ring	セコール リング
624404141	1	Hood ring	フード
624404161	1	Fousing ring	キヨリワ
624404171	1	Rubber grip	キヨリワ バンド
624404211	1	Aperture ring	絞りリング
522304221	1	Spring	クリックバネ
524401171	1	Light baffle	後 マスク
524404181	1	Retaining ring	キヨリワ押え
524600021	1	Rear lens Ass'y	後レンズAss'y
524604121	1	Filter ring	フィルターリング
524604131	1	Ring	フード飾り
524604261	1	Velveteen(F)	フードテレンプ(前)
524604271	1	Velveteen(R)	フードテレンプ(後)
524604281	1	Retainer	フード飾り押え
524704311	1	Mount base ring	バヨネ台
S-3PB1.4×3	3	Screw	キヨリワ止ネジ
S-PD1.4×2.8	3	Screw	フィルターリング止ネジ
S-PD1.7×8	3	Screw	バヨネ止ネジ
S-PD1.7×8	3	Screw	バヨネ台止ネジ
B016	1	Steel ball(φ1/16)	クリックボール

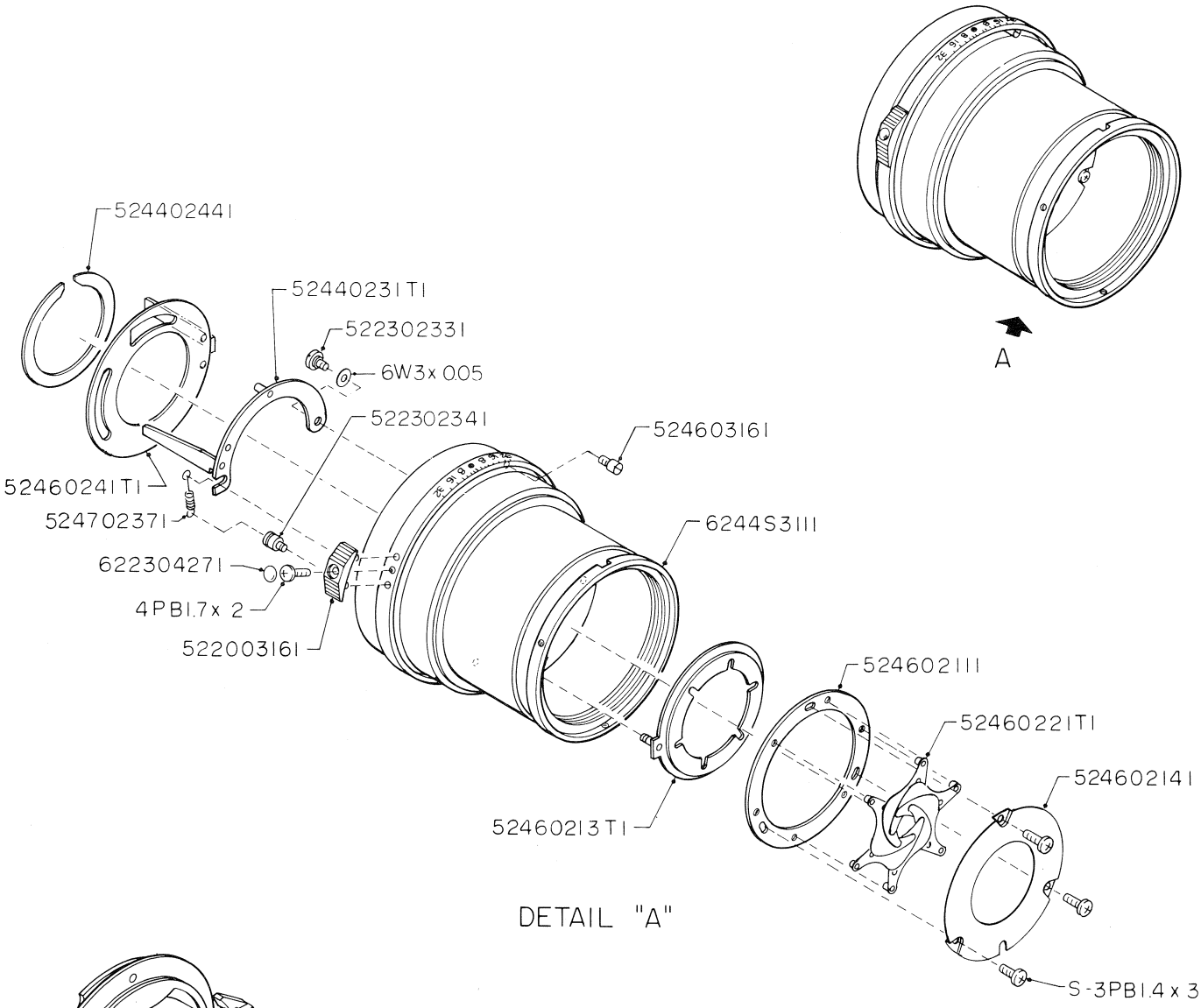

DETAIL "A"

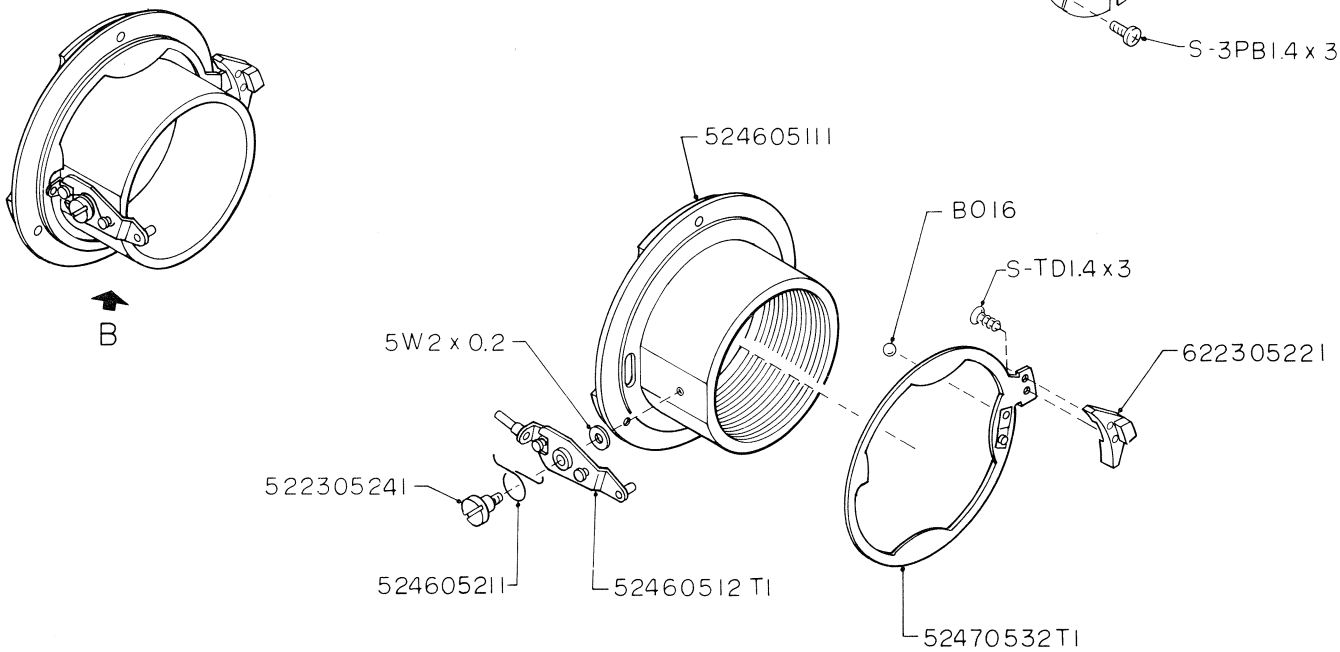

DETAIL "B"

PARTS LIST

Parts No.	QTY.	Description	部品名称
6244S3111	1	Helicoid Ass'y	ヘリコイドAss'y
622304271	1	Red dot	取付指標
522003161	1	Knob	指かけ
522302331	1	Shoulder screw	テコ軸
522302341	1	Anchor	テコバネ掛
52440231T1	1	Control cam	絞りテコ
52460241T1	1	Aperture control cam	絞りカム
524402441	1	Retainer	絞りカム止め
524602111	1	Securing ring	キク座
52460213T1	1	Operating ring	キク
524602141	1	Fixing ring	羽根押え
52460221T1	1	Diaphragm blade	絞り羽根
524603161	1	Stopper	キョリワ ストッパー
524702371	1	Spring	テコバネ
4PB1.7×2	1	Screw	指かけ止ネジ
S-3PB1.4×3	3	Screw	羽根押え止ネジ
6W3×0.05	1	Washer	テコワッシャ
622305221	1	AM changing knob	切替ツマミ
5223052541	1	Shoulder screw	作動レバー軸
524605111	1	Mounting ring	マウント
52460512T1	1	Operating lever	作動レバー
5245605211	1	Spring	伸介バネ
52470532T1	1	Changing ring	切替板
S-TD1.4×3	2	Screw	切替板ツマミ止ネジ
5W2×0.2	1	Washer	作動ハブワッシャ
B016	1	Steel ball(φ1/16")	クリックボール

Mamiya

PARTS CATALOG

M645 SUPER

Polaroid Land Pack Film Holder N
Power Drive N
L Hand Grip (Large, Middle & Small)
W/Connector N

PC85-M645S-501

Polaroid Land Pack Film Holder N

Polaroid Land Pack Film Holder N Ass'y

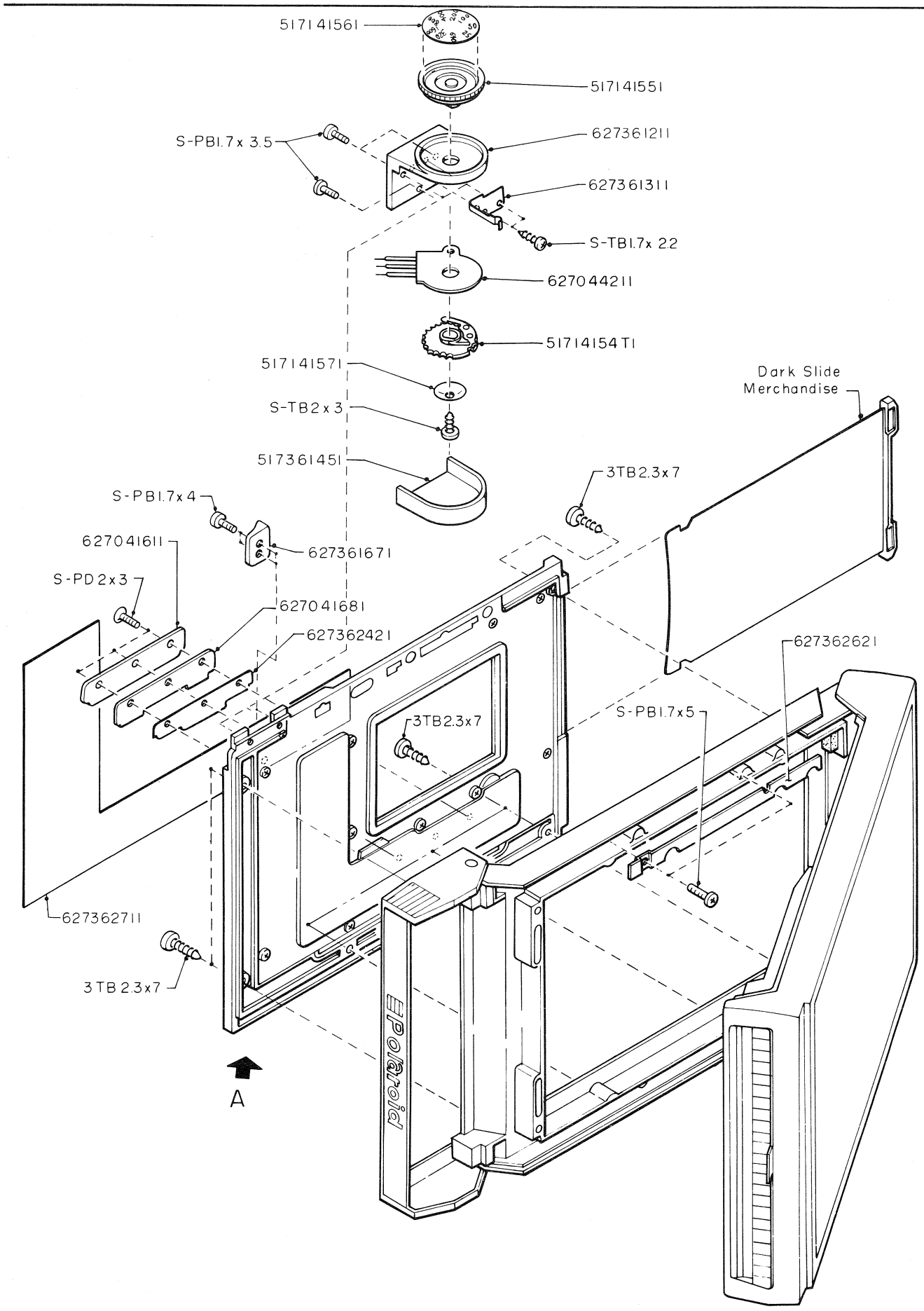

PARTS LIST

Parts No.	QTY.	Description	部品名称
627361211	1	ISO holder	P-ASA台
627361311	1	Leaf spring	ASA クリックバネ
627361671	1	Knob	Pフック外しレバーツマミ
627362421	1	Leaf spring	P-RH掛板バネ
627362621	1	Holder plate	P-RH前板押板
627362711	1	Rubber	P-RH前板ゴム
627041611	1	Catch plate	P-RH掛板
627041681	1	Spacer	P-RH掛板スペーサー
627044211	1	ISO resister plate	ASAプリント板
51714154T1	1	Brush disk	ASA接片台
517141551	1	ISO dial	ASAダイヤル
517141561	1	ISO scale	ASA板
517141571	1	Friction washer	ASAバネ ワッシャー
517361451	1	Cover	ASAカバー
S-PB1.7×3.5	3	Screw	ASA台止ネジ
S-PB1.7×4	2	Screw	Pフック外しツマミ止ネジ
S-PB1.7×5	2	Screw	P-RH前板押板止ネジ
S-PD2×3	3	Screw	P-PH掛板止ネジ
S-TB1.7×2.2	2	Screw	ASAクリックバネ止ネジ
S-TB2×3	1	Screw	ASAダイヤル止ネジ
3TB2.3×7	6	Screw	P-RH前板止ネジ

Detail "A" Base Frame Ass'y

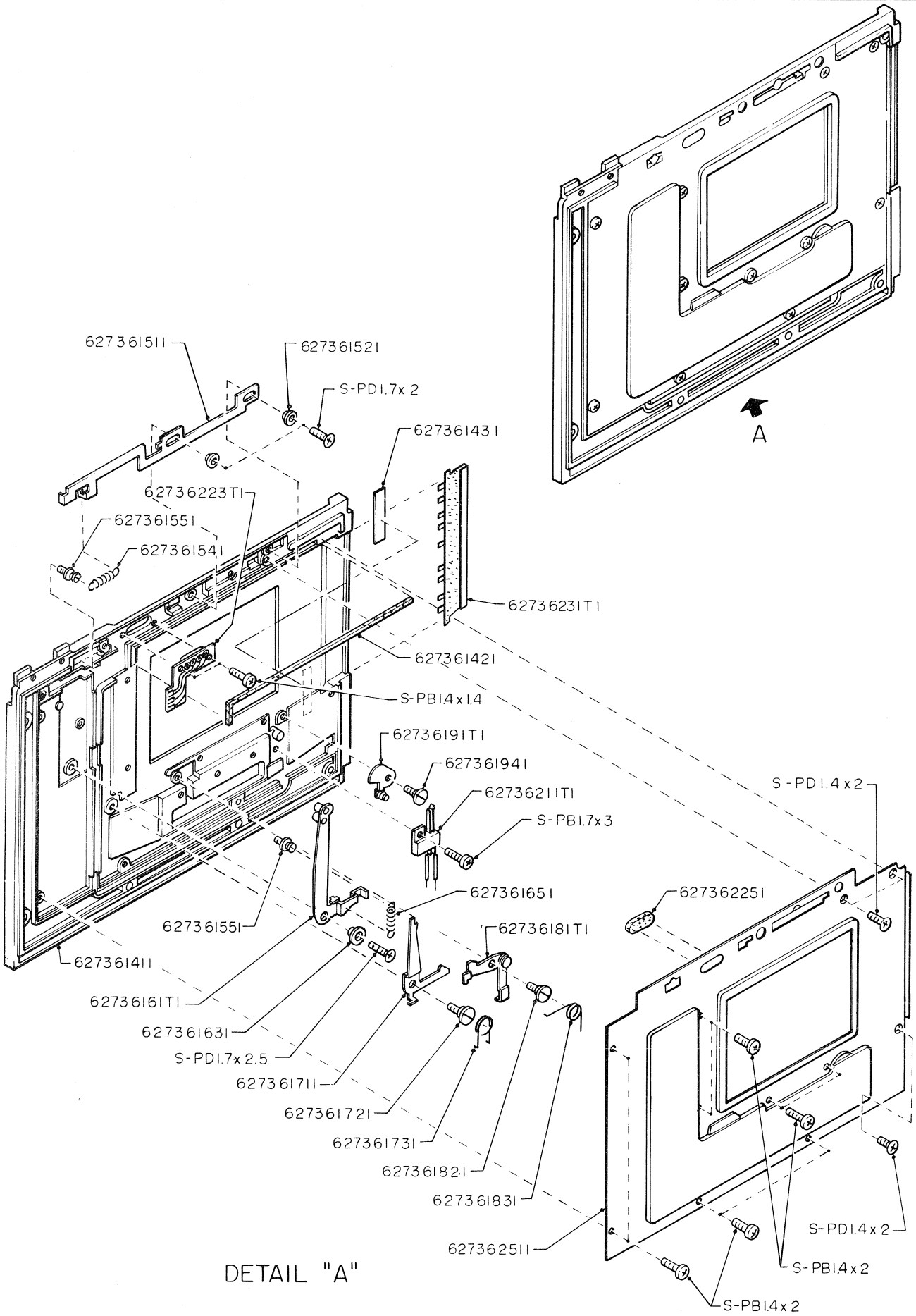

DETAIL "A"

PARTS LIST

Parts No.	QTY.	Description	部品名称
627361411	1	Base frame	P-RH前板
627361421	1	Sealing strip	P-RH前板テレンプ
627361431	1	Plate	P-RH前板盲板
627361511	1	Claw lever	Pフック板
627361521	2	Collar	Pフック板軸
627361541	1	Spring	Pフック板バネ
627361551	2	Shoulder screw	Pフック板バネカケ
62736161T1	1	Lever	Pフック外しレバー
627361631	1	Collar	Pフック外しレバー軸
627361651	1	Spring	Pフック外しバネ
627361711	1	Lock lever	Pロックレバー
627361721	1	Shoulder screw	Pロックレバー軸
627361731	1	Spring	Pロックレバーバネ
62736181T1	1	Claw plate	P引きぶたロック爪
627361821	1	Shoulder screw	P引きぶたロック爪軸
627361831	1	Spring	P引きぶたロック爪バネ
62736191T1	1	Lever	P引きぶたレバー
627361941	1	Shoulder screw	P引きぶたレバー軸
62736211T1	1	Switch	P引きぶたスイッチ
62736223T1	1	Signal pins housing	P-ASAピン基板
627362251	1	Sealing Moltopren	P 遮光モルト
62736231T1	1	Leaf spring	P 遮光バネ
627362511	1	Shield plate	P-RH遮光板
S-PB1.4×1.4	2	Screw	P-ASAピン基板止ネジ
S-PB1.4×2	8	Screw	P-RH遮光板止ネジ(甲)
S-PB1.7×3	1	Screw	P引きぶたスイッチ止ネジ
S-PD1.4×2	3	Screw	P-RH遮光板止ネジ(乙)
S-PD1.7×2	2	Screw	Pフック板軸止ネジ
S-PD1.7×2.5	1	Screw	Pフック外しレバー軸止ネジ

Power Drive N

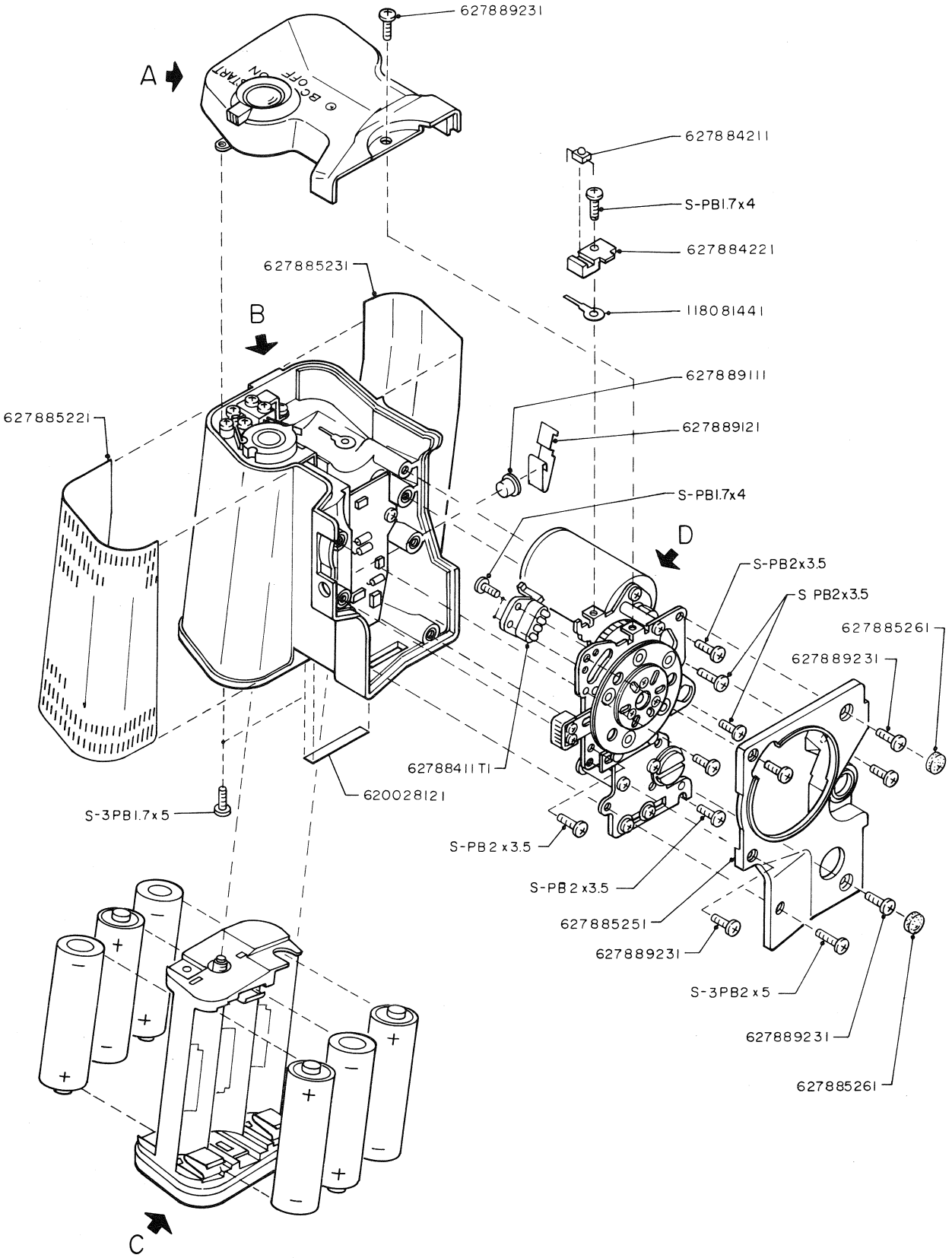
627889231
A
627884211
S-PB1.7x4
627884221
627885231
118081441
B
627889111
627885221
627889121
S-PB1.7x4
D
S-PB2x3.5
S PB2x3.5
627885261
627889231
627884111T1
620028121
S-3PB1.7x5
S-PB2x3.5
S-PB2x3.5
627885251
627889231
S-3PB2x5
627889231
627885261
C

PARTS LIST

Parts No.	QTY.	Description	部品名称
62788411T1	1	Connector	W接点台
627884211	1	LED	LED
627884221	1	LED holder	LED座
627885221	1	Rubber grip F	グリップゴム 前
627885231	1	Rubber grip R	グリップゴム 後
627885251	1	Side panel	側板
627885261	2	Rubber	側板ゴム
627889111	1	Lock button	ロックボタン
627889121	1	Leaf spring	ロックバネ
627889231	6	Screw	側板止ネジ
620028121	1	Number plate	No.プレート
118081441	1	Lug plate	ラグ板
S-PB1.7×4	2	Screw	W接点台止ネジ
S-PB1.7×4	1	Screw	LED座止ネジ
S-PB2×3.5	6	Screw	ユニット取付ネジ
S-3PB1.7×5	2	Screw	上カバー止ネジ
S-3PB2×5	1	Screw	側板止ネジ

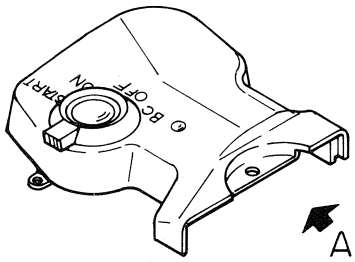
A

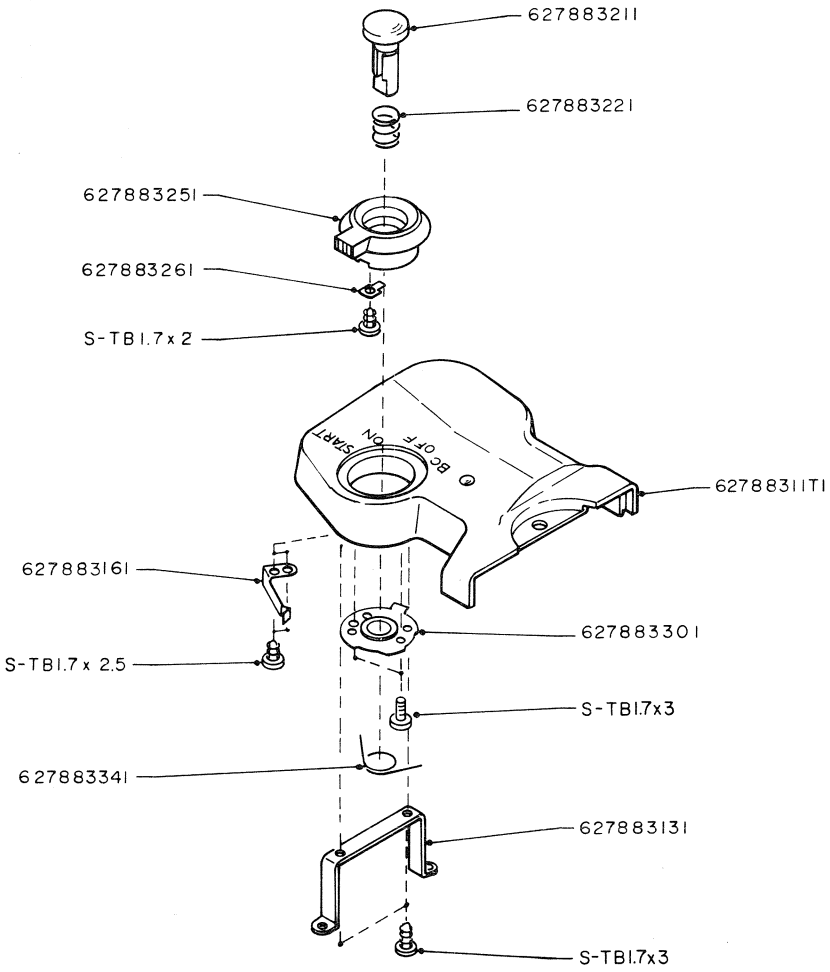
627883211
627883221
627883251
627883261
S-TB1.7x2
627883111T1
627883161
627883301
S-TB1.7x2.5
S-TB1.7x3
627883341
627883131
S-TB1.7x3

DETAIL "A"

PARTS LIST

Parts No.	QTY.	Description	部品名称
62788311T1	1	Top cover	上カバー
627883131	1	Frame	上カバーアングル
627883161	1	Leaf spring	クリックバネ
627883211	1	Release button	レリーズボタン
627883221	1	Spring	レリーズボタンバネ
627883251	1	Selector lever	切替ツマミ
627883261	1	Plate	切替ツマミ板
627883301	1	Disk	レリーズ板
627883341	1	Spring	レリーズ板バネ
S-TB1.7×2	1	Screw	切替ツマミ止ネジ
S-TB1.7×2.5	2	Screw	フリックバネ止ネジ
S-TB1.7×3	2	Screw	上カバーアングル止ネジ
S-TB1.7×3	2	Screw	レリーズ板止ネジ

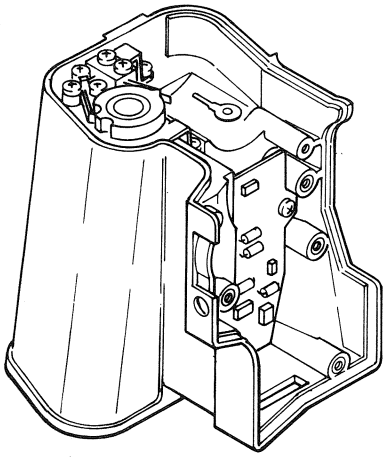

B

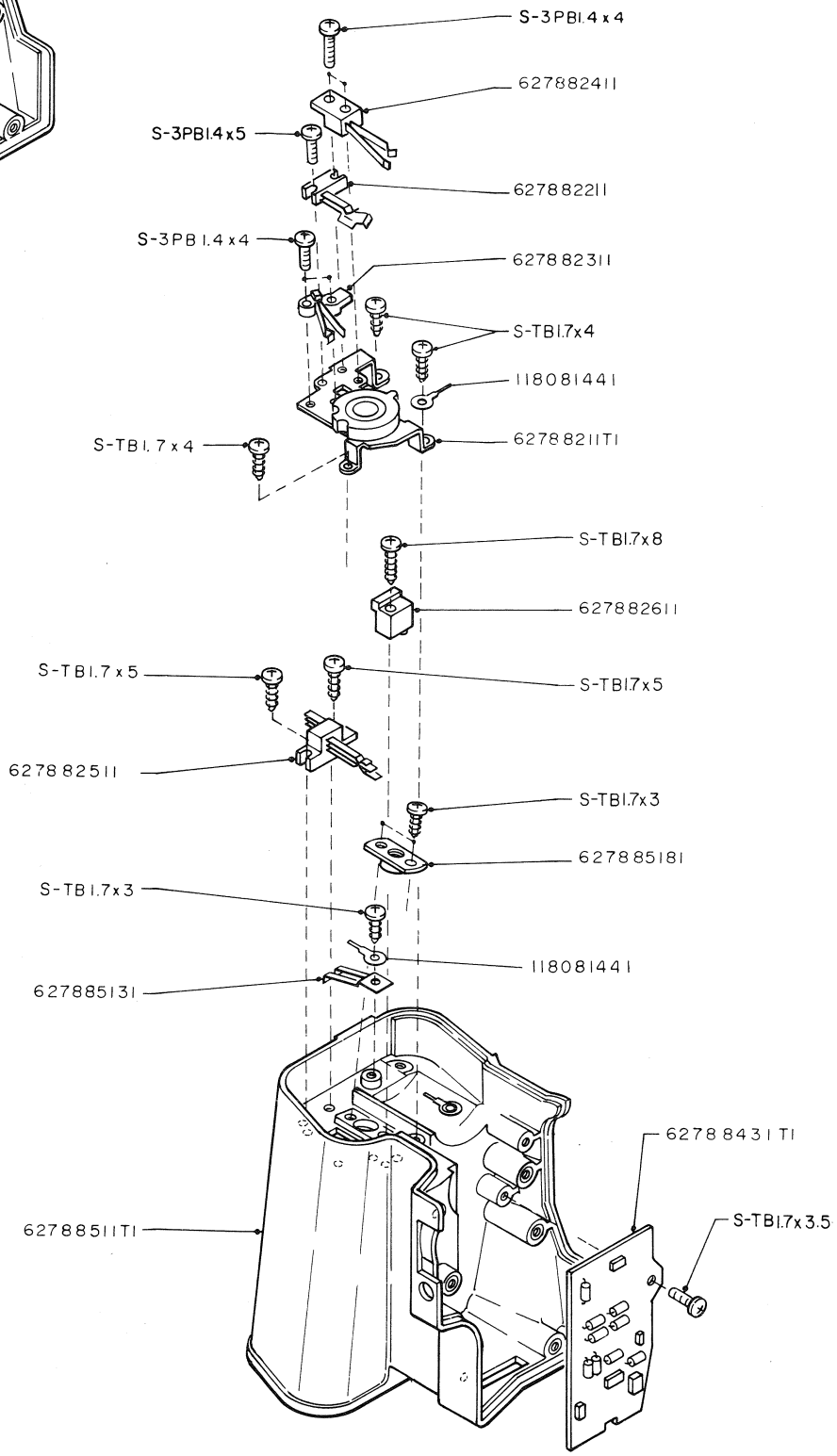
S-3PB1.4x4
627882411
S-3PB1.4x5
6278822 11
S-3PB 1.4x4
627882311
S-TB1.7x4
118081441
S-TB1.7x4
6278821 1T1
S-TB1.7x8
627882611
S-TB1.7x5
S-TB1.7x5
627882511
S-TB1.7x3
627885181
S-TB1.7x3
118081441
627885131
6278843 1 T1
S-TB1.7x3.5
627885 11T1

DETAIL "B"

PARTS LIST

Parts No.	QTY.	Description	部品名称
62788211T1	1	Base plate	レリーズ基板
627882211	1	Power switch	電源スイッチ
627882311	1	Winding switch	起動スイッチ
627882411	1	BC switch	BC スイッチ
627882511	1	Release switch	レリーズスイッチ
627882611	1	Holder	レリーズスイッチ受け
62788431T1	1	Printed circuit board	制御回路
62788511T1	1	Grip	グリップ
627885131	1	Contact	マイナス接片
627885181	1	Fitting plate	電池ケース受ネジ
118081441	2	Lug plate	ラグ板
S-3PB1.4×4	3	Screw	スイッチ止ネジ
S-3PB1.4×5	1	Screw	BC スイッチ止ネジ
S-TB1.7×3	1	Screw	マイナス接片止ネジ
S-TB1.7×3	2	Screw	電池ケース受ネジ
S-TB1.7×3.5	1	Screw	制御回路止ネジ
S-TB1.7×4	3	Screw	レリーズ基板止ネジ
S-TB1.7×5	2	Screw	レリーズスイッチ止ネジ
S-TB1.7×8	1	Screw	レリーズスイッチ受ネジ

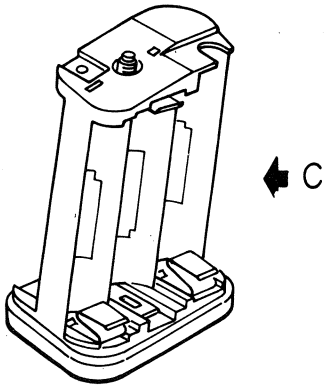
C

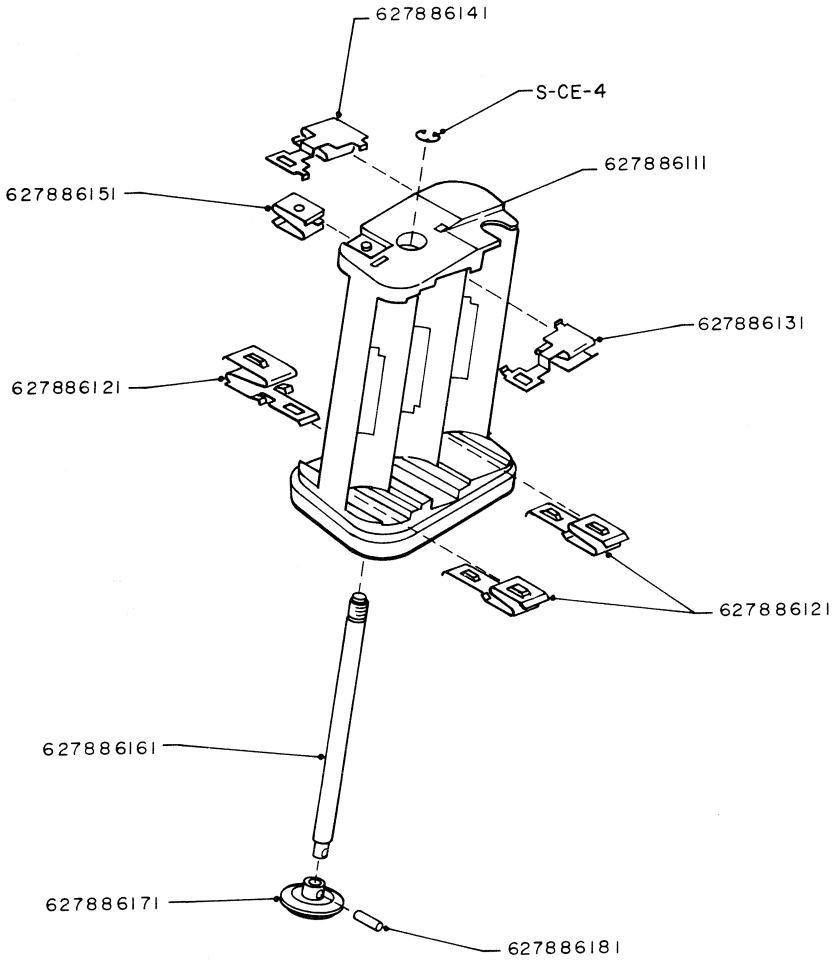
627886141
S-CE-4
627886111
627886151
627886131
627886121
627886121
627886161
627886171
627886181

DETAIL "C"

PARTS LIST

Parts No.	QTY.	Description	部品名称
627886111	1	Battery case	電池ケース
627886121	3	Contact A	電池接片 A
627886131	1	Contact B	電池接片 B
627886141	1	Contact C	電池接片 C
627886151	1	Contact D	電池接片 D
627886161	1	Shaft	電池ケース軸
627886171	1	Stopper disk	電池ケース止め
627886181	1	Pin	電池ケース軸ピン
S-CE-4	1	CE-Ring	電池ケース軸止リング

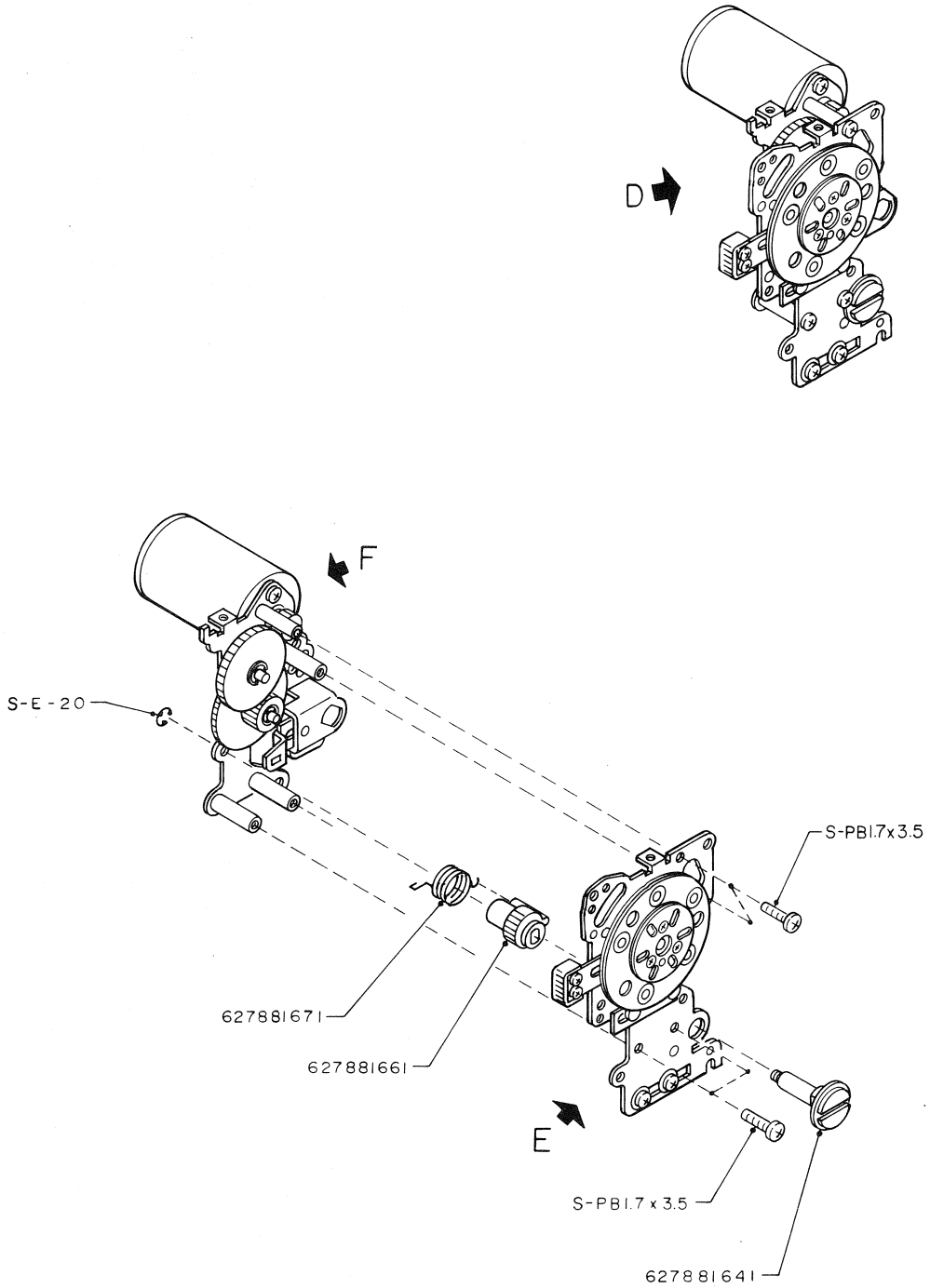
D
F
S-E-20
S-PB1.7x3.5
627881671
627881661
E
S-PB1.7 x 3.5
627881641

DETAIL "D"

PARTS LIST

Parts No.	QTY.	Description	部品名称
627881641	1	Shaft	M切替軸
627881661	1	Gear	M切替歯車
627881671	1	Spring	M切替バネ
S-PB1.7×3.5	4	Screw	モータ基板止ネジ
S-E-20	1	E-Ring	M切替軸止リング

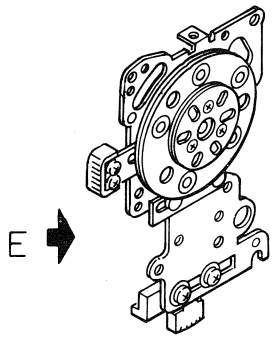
E

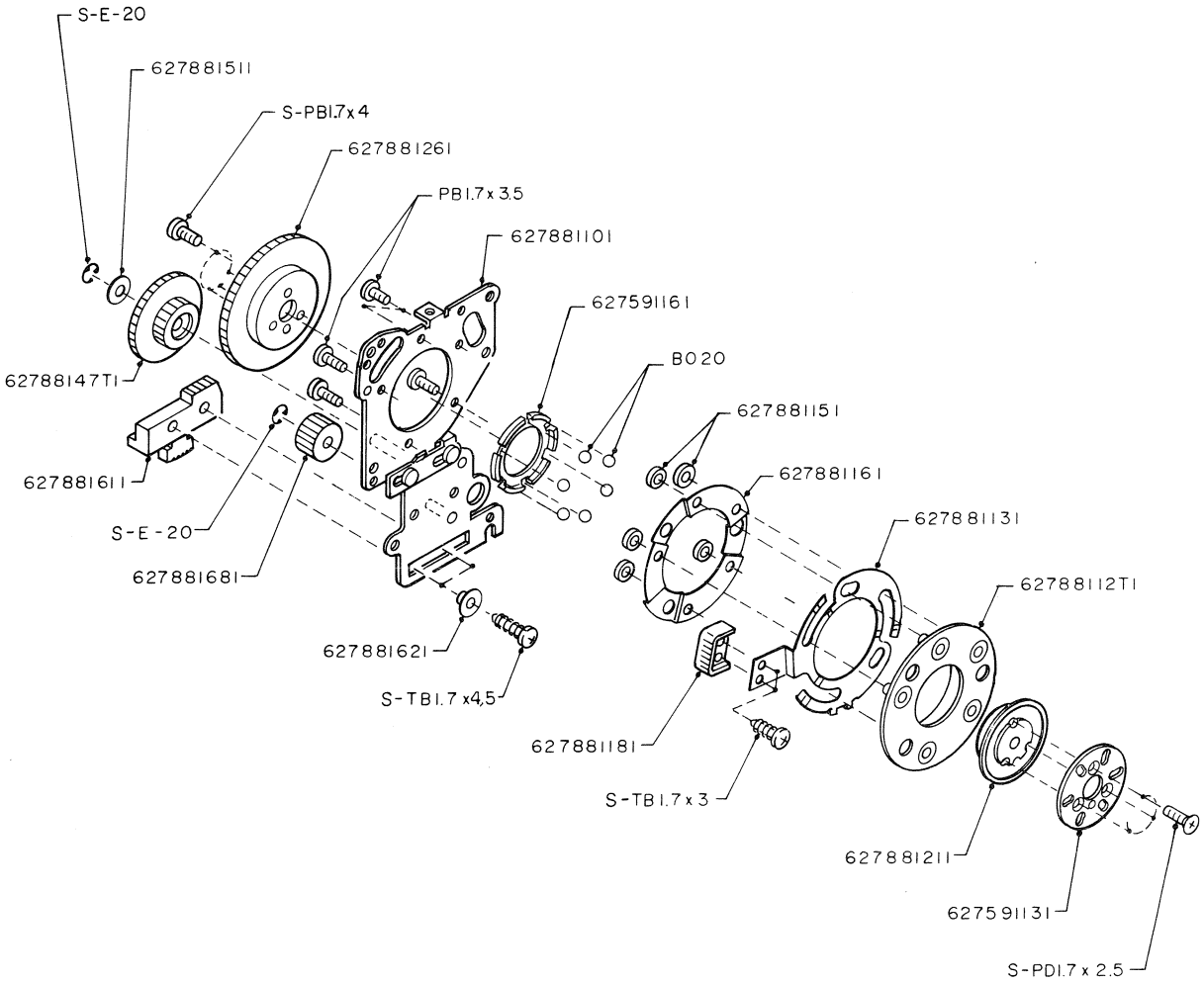
S-E-20
627881511
S-PB1.7x4
627881261
PB1.7x3.5
627881101
627591161
B020
627881151
627881161
627881131
627881121
627881147T1
627881611
S-E-20
627881681
627881621
S-TB1.7x4.5
627881181
S-TB1.7x3
627881211
627591131
S-PD1.7x2.5

DETAIL "E"

PARTS LIST

Parts No.	QTY.	Description	部品名称
627881101	1	Base frame	取付基板
62788112T1	1	Coupling disk	W5 歯車軸受
627881131	1	Bayonet disk	止版
627881151	5	Collar	止板軸カラー
627881161	1	Leaf spring	止板押え
627881181	1	Knob	止板ツマミ
627881211	1	Hub	W5 歯車軸
627881261	1	W5 gear	W5 歯車
62788147T1	1	W4 gear	W4 歯車
627881611	1	Knob	M 切替ラック
627881621	1	Collar	M 切替ラックカラー
627881681	1	Idle gear	アイドル歯車
627881511	1	Washer	W 歯車ワッシャ
627591131	1	Base disk	ノブ軸板
627591161	1	Spacer	ボールリテーナ
S-PB1.7×3.5	5	Screw	止板軸止ネジ
S-PB1.7×4	4	Screw	W5 歯車止ネジ
S-PD1.7×2.5	3	Screw	ノブ軸板止ネジ
S-TB1.7×3	2	Screw	ツマミ止ネジ
S-TB1.7×4.5	2	Screw	M 切替ラック止ネジ
S-E-20	2	E-ring	止リング
B020	6	Steal ball(φ2)	ボール

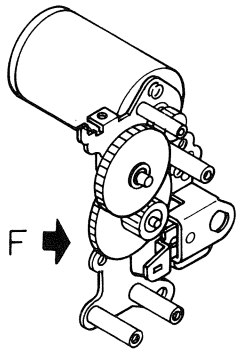
F

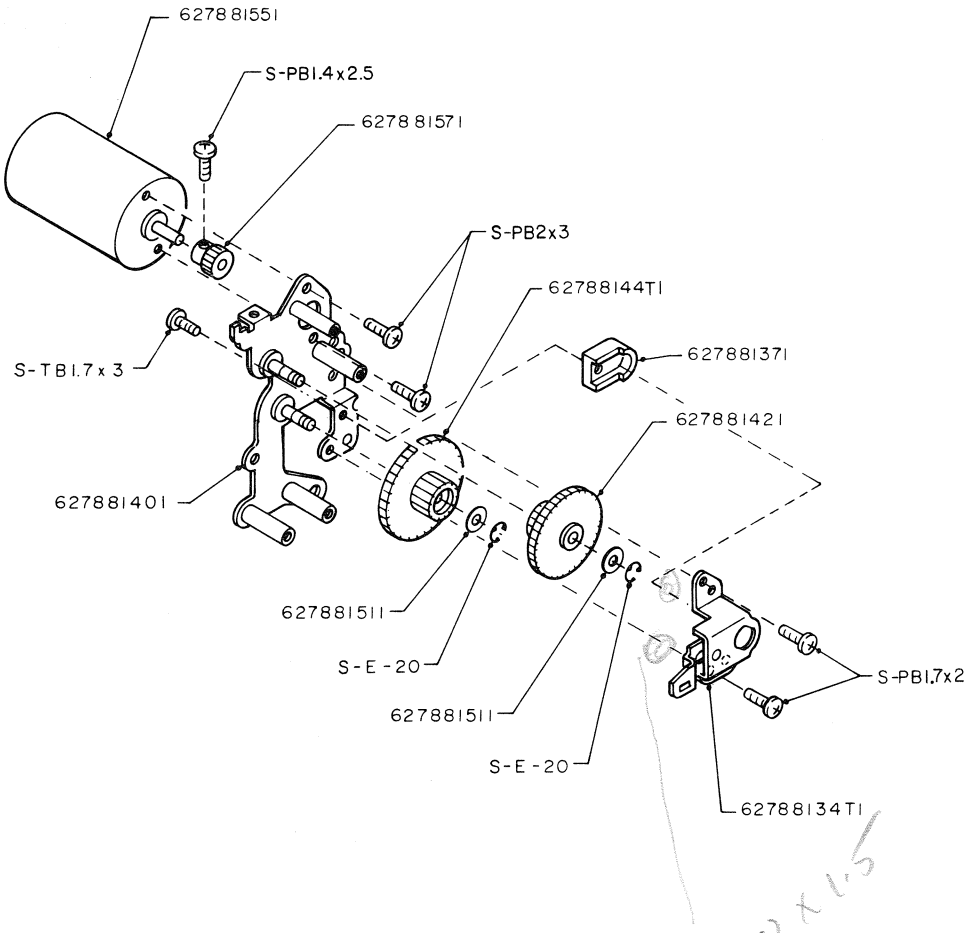
62788155I
S-PB1.4x2.5
62788157I
S-PB2x3
62788144TI
62788137I
S-TB1.7x3
627881421
627881401
627881511
S-E-20
627881511
S-E-20
S-PB1.7x2
62788134TI
6W x 1.5

DETAIL "F"

PARTS LIST

Parts No.	QTY.	Description	部品名称
62788134T1	1	Plate	第2止板基板
627881371	1	Holder	第2止板受け
627881401	1	Base plate	モータ基板
627881421	1	W2 gear	W2 歯車
62788144T1	1	W3 gear	W3 歯車
627881511	2	Washer	W 歯車ワッシャ
627881551	1	Motor	モータ
627881571	1	W1 gear	W1 歯車
S-PB1.4×2.5	1	Screw	W1 歯車止ネジ
S-PB1.7×2	2	Screw	第2止板止ネジ
S-PB2×3	2	Screw	モータ止ネジ
S-TB1.7×3	1	Screw	第2止板受け止ネジ
S-E-20	2	E-Ring	歯車止リング

L Hand Grip (Large, Middle & Small)

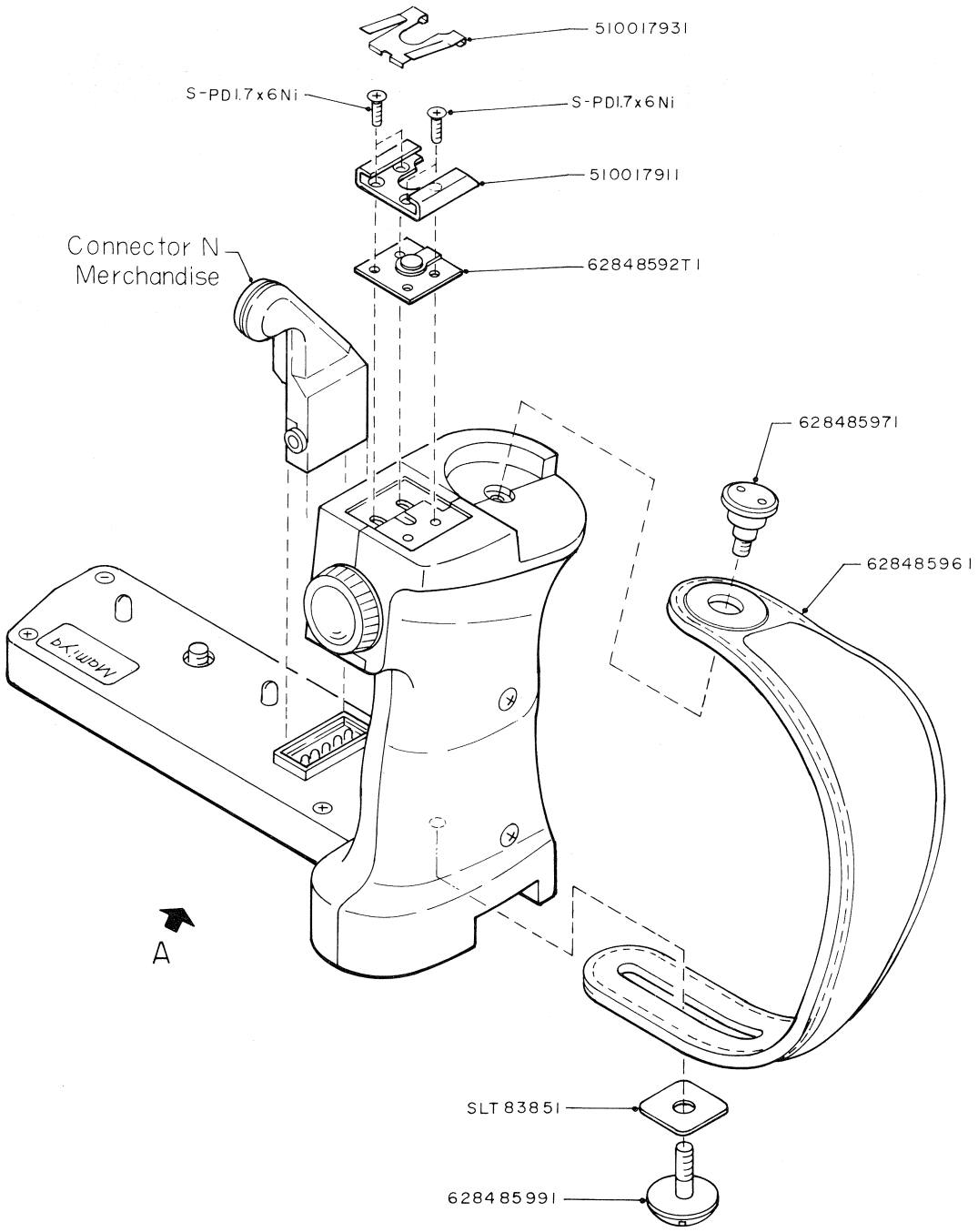
510017931
S-PD1.7x6Ni
S-PD1.7x6Ni
510017911
Connector N
Merchandise
62848592T1
628485971
628485961
A
SLT 83851
628485991

PARTS LIST

Parts No.	QTY.	Description	部品名称
62848592T1	1	Base plate	下駄接点台
628485961	1	Grip belt	バンド
628485971	1	Guide screw	バンドガイド軸
628485991	1	Screw	バンド止ネジ
510017911	1	Accessory shoe	下駄
510017931	1	Shoe cover	下駄カバー
SLT83851	1	Plate	ベルト座
S-PD1.7×6Ni	4	Screw	下駄止ネジ

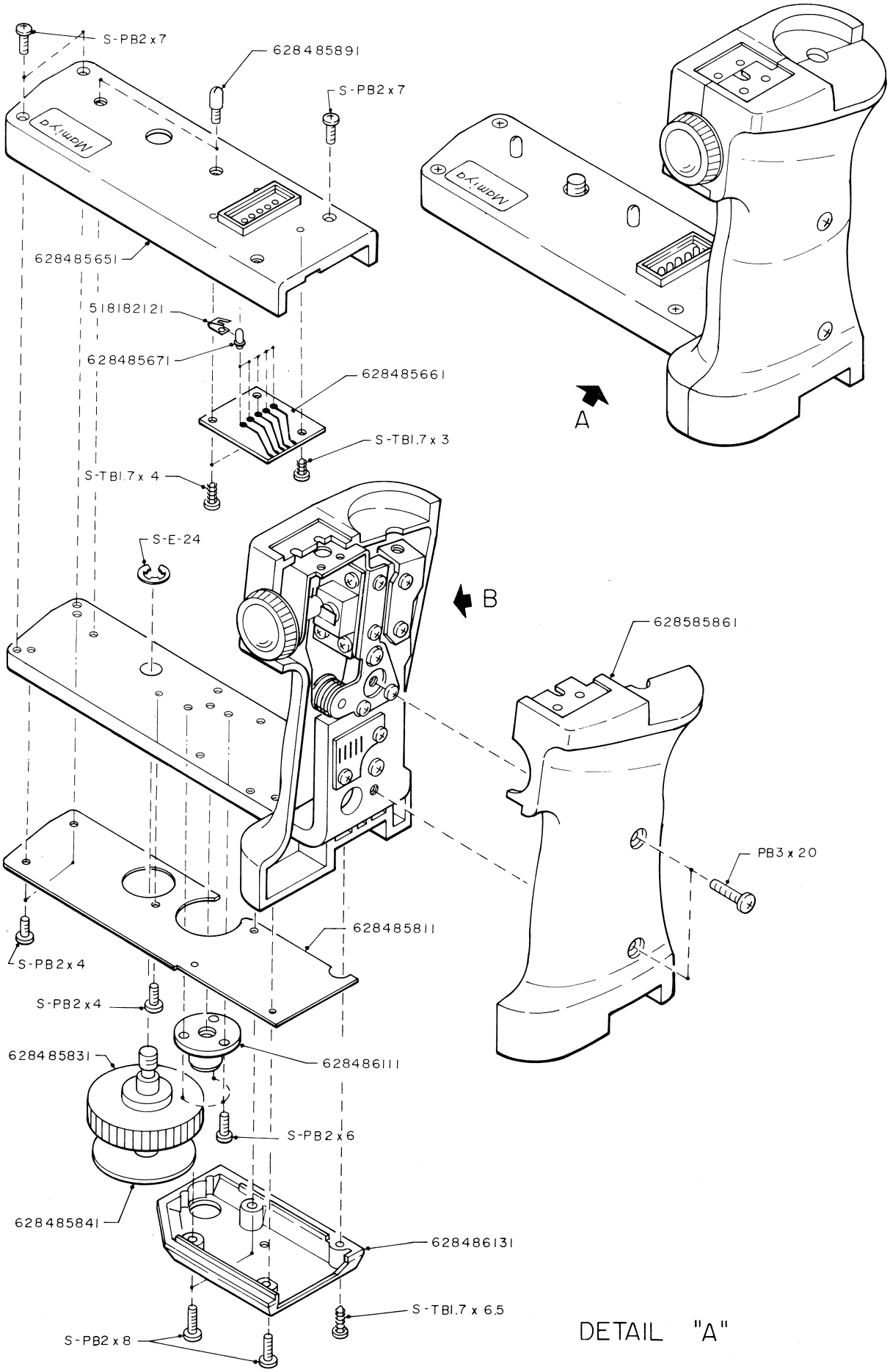
S-PB2x7
628485891
S-PB2x7
Mdm'Yd
Mdm'Yd
628485651
518182121
628485671
628485661
S-TBI.7x3
S-TBI.7x4
A
S-E-24
B
628585861
PB3x20
628485811
S-PB2x4
S-PB2x4
628485831
628486111
S-PB2x6
628485841
628486131
S-TBI.7x6.5
S-PB2x8

DETAIL "A"

PARTS LIST

Parts No.	QTY.	Description	部品名称
628585861	1	Grip housing L	中型グリップ左
628485651	1	Cover	アングルカバー
628485661	1	Printed circuit board	コネクター基板
628485671	5	Contact pin	コネクターピン
628485811	1	Bottom plate	底板
628485831	1	Tripod screw	三脚ネジ
628485841	1	Disk	三脚ネジ蓋板
628485891	2	Pin	位置決めピン
628486111	1	Tripod socket	三脚止
628486131	1	Bottom cover	三脚止カバー
518182121	5	Leaf spring	コネクターバネ
S-PB2×4	3	Screw	底板止ネジ
S-PB2×6	3	Screw	三脚止ネジ
S-PB2×7	4	Screw	アングルカバー止ネジ
S-PB2×8	3	Screw	三脚止カバーネジ
PB3×20	2	Screw	クリップ左止ネジ
S-TB1.7×3	1	Screw	コネクター基板止ネジ
S-TB1.7×4	2	Screw	コネクター基板止ネジ
S-TB1.7×6.5	1	Screw	三脚止カバーネジ
S-E-24	1	E-Ring	三脚ネジEリング

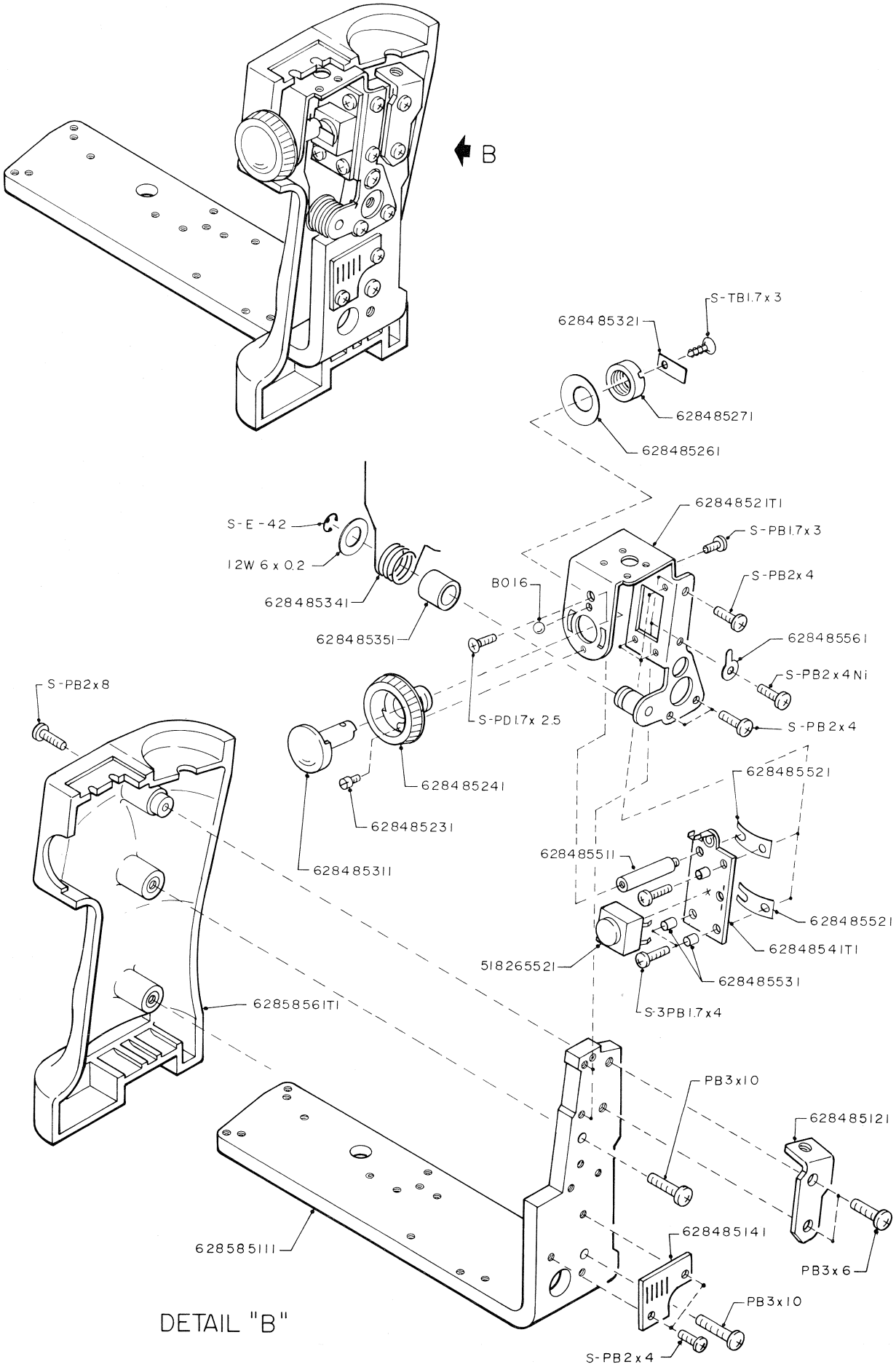
B
S-TB1.7x3
628485321
628485271
628485261
628485211T1
S-PB1.7x3
S-E-42
12W 6x0.2
B016
S-PB2x4
628485341
628485351
628485561
S-PB2x4Ni
S-PB2x8
S-PD1.7x2.5
S-PB2x4
628485241
628485521
628485231
628485311
628485511
628485521
628485411T1
51826552I
628485531
S-3PB1.7x4
6285856ITI
PB3x10
628485121
628585111
628485141
PB3x6
PB3x10
S-PB2x4

DETAIL "B"

PARTS LIST

Parts No.	QTY.	Description	部品名称
628585111	1	Angle plate(Middle)	中型アングル
62858561T1	1	Grip housing R	中型グリップ右
628485121	1	Plate	バンド止板
628485141	1	Printed circuit board	ターミナルプリント
62848521T1	1	Base frame	スイッチ枠
628485231	1	Guide screw	レリーズロック筒ストッパー
628485241	1	Release lock guide	レリーズロック筒
628485261	1	Spring washer	レリーズロックバネ
628485271	1	Nut	レリーズロックナット
628485311	1	Shutter release button	レリーズボタン
628485321	1	Plate	レリーズボタン爪
628485341	1	Spring	レリーズボタンバネ
628485351	1	Spacer	レリーズバネ スペーサー
62848541T1	1	Plate	スイッチ基板
628485511	1	Shaft	スイッチ枠支柱
628485521	2	Leaf spring	スイッチ基板バネ
628485531	3	Collar	スイッチ基板スペーサー
628485561	1	Lug plate	アースラグ
518265521	1	Shutter release switch	レリーズ スイッチ
S-PB1.7×3	1	Screw	スイッチ支柱止ネジ
S-PB2×4	2	Screw	ターミナルプリント止ネジ
S-PB2×4	3	Screw	スイッチ枠止ネジ
S-PB2×4Ni	1	Screw	アースネジ
S-PB2×8	1	Screw	グリップ右止ネジ
PB3×6	2	Screw	バンド止板ネジ
PB3×10	2	Screw	グリップ右止ネジ
S-3PB1.7×4	3	Screw	スイッチ基板止ネジ
S-PD1.7×2.5	1	Screw	スイッチ支柱止ネジ
S-TB1.7×3	1	Screw	レリーズボタン爪ネジ
12W6×0.2	1	Washer	ボタンバネワッシャー
S-E-42	1	E-Ring	ボタンバネ Eリング
B016	1	Stel ball(φ1/16")	クリックボール

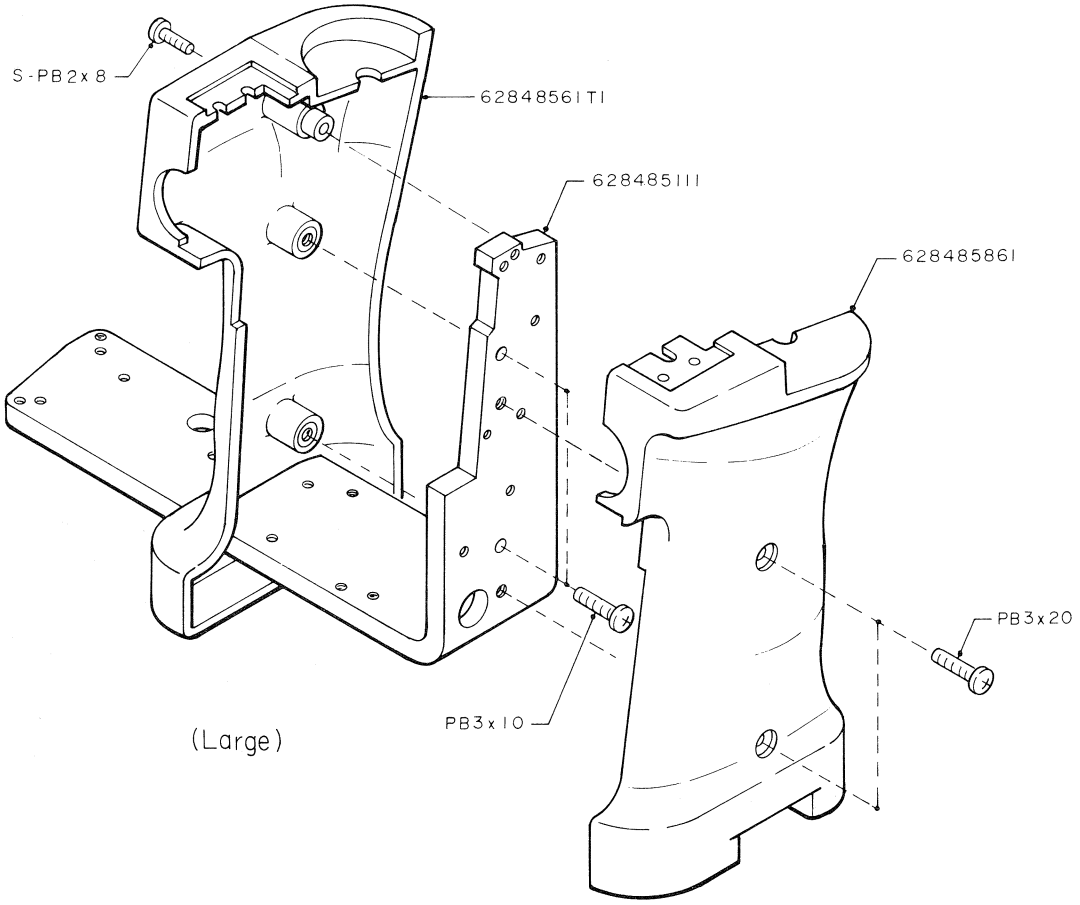
S-PB2x8
628485611TI
628485111
628485861
PB3x20
PB3x10

(Large)

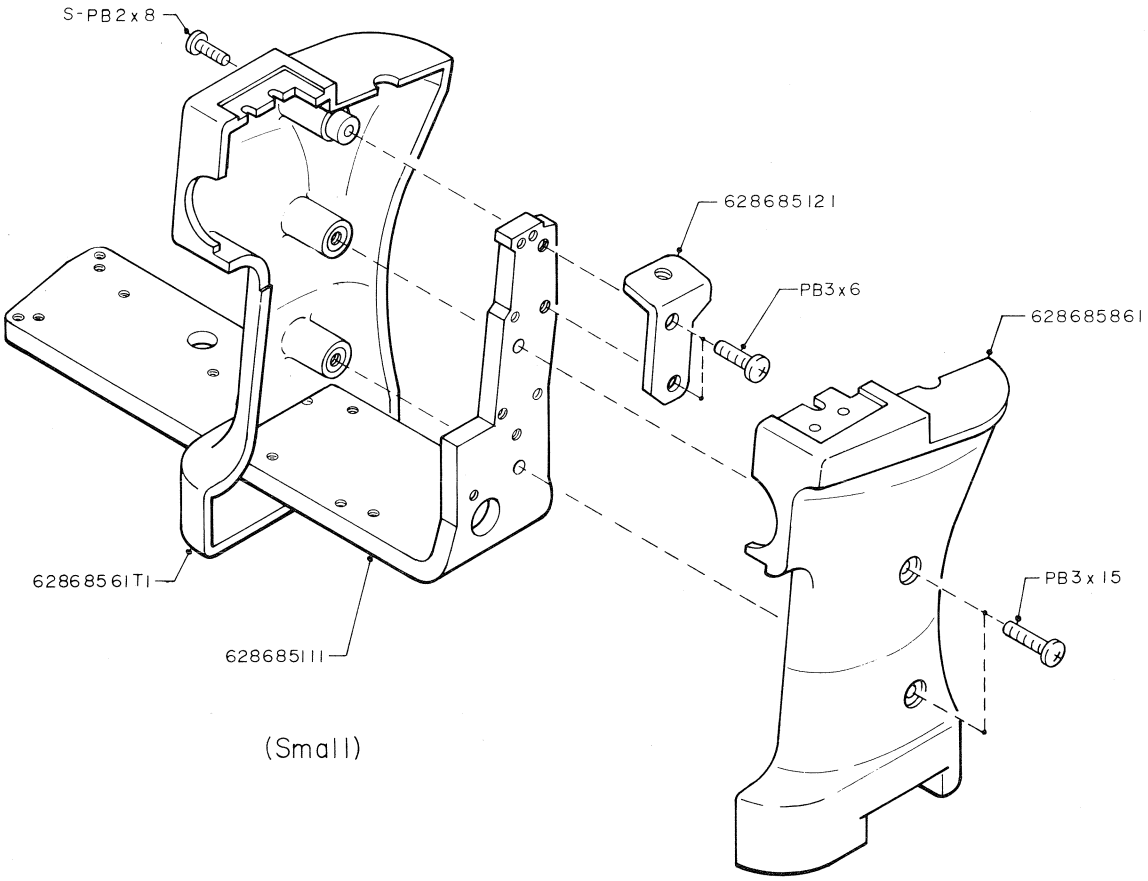
S-PB2x8
628685121
PB3x6
628685861
628685611TI
PB3x15
628685111

(Small)

PARTS LIST

Parts No.	QTY.	Description	部品名称
628485111	1	Angle plate(Large)	大型アングル
62848561T1	1	Grip housing R	大型グリップ右
628485861	1	Grip housing L	大型グリップ左
628685111	1	Angle plate(Small)	小型アングル
628685121	1	Plate	小型バンド止板
62868561T1	1	Grip housing R	小型グリップ右
628685861	1	Grip housing L	小型グリップ左
PB3×15	2	Screw	グリップ左止ネジ

Connector N

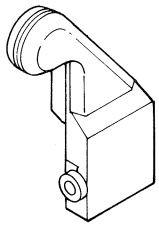

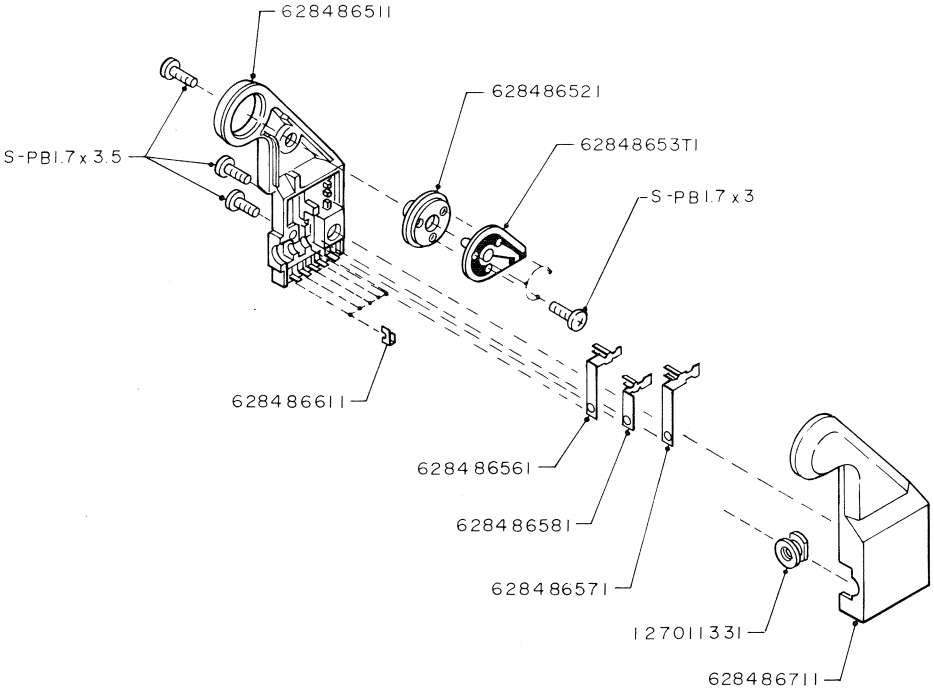
628486511
628486521
62848653T1
S-PB1.7x3.5
S-PB1.7x3
628486611
628486561
628486581
628486571
127011331
628486711

PARTS LIST

Parts No.	QTY.	Description	部品名称
628486511	1	Contact base	アダプターベース
628486521	1	Coupling ring	プラグ外筒
62848653T1	1	Printed circuit board	PC プリント
628486561	1	Contact D	D 接片
628486571	1	Contact C	C 接片
628486581	1	Contact B	B 接片
628486611	5	Contact	アダプター接片
628486711	1	Cover	アダプターカバー
127011331	1	Socket	レリーズネジ