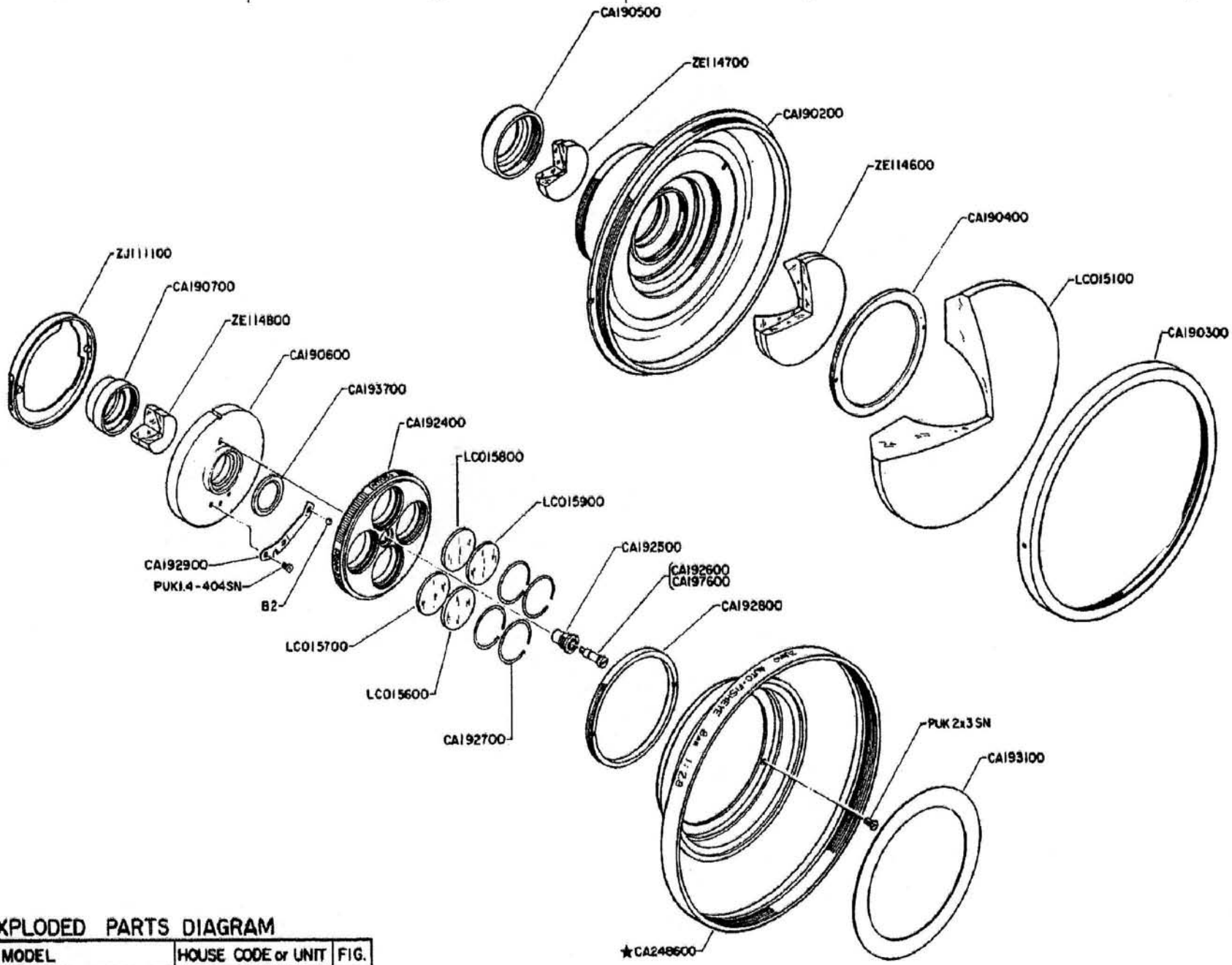

EXPLODED PARTS DIAGRAM

MODEL	HOUSE CODE or UNIT	FIG.
OLYMPUS OM-SYSTEM ZUIKO AUTO FISHEYE 8mm 1:2.8	M8FE TYPE-1	1/2
OLYMPUS OPTICAL CO., LTD. TOKYO, JAPAN		

0263

NOTE: WHEN ORDERING FOR SPARE PARTS, PLEASE CLARIFY A MODEL, PARTS NUMBER AND QUANTITY.

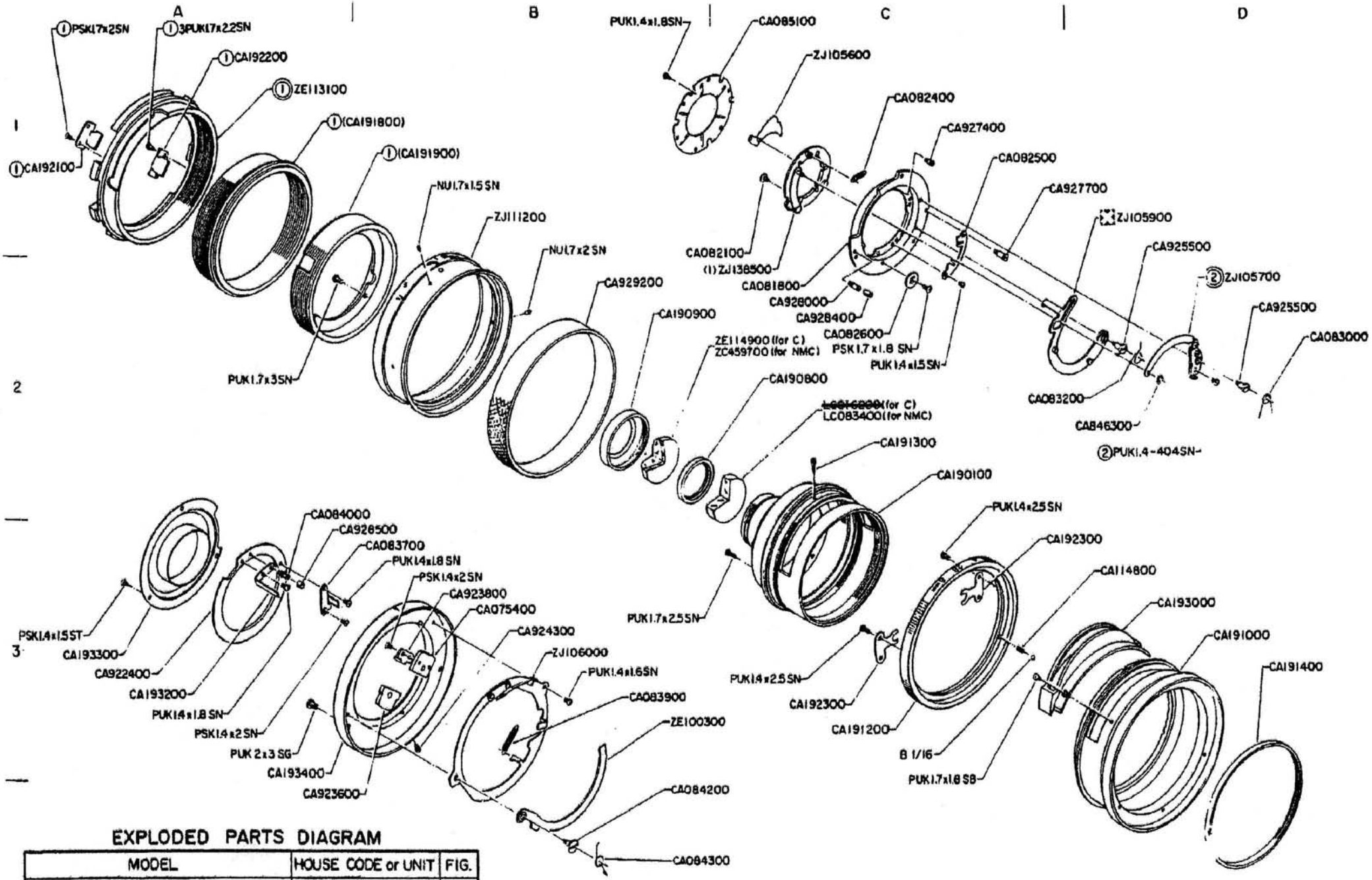

EXPLODED PARTS DIAGRAM

MODEL	HOUSE CODE or UNIT	FIG.
OLYMPUS OM-SYSTEM ZUIKO AUTO FISHEYE 1:2.8 f=8mm	M8FE TYPE-1(C)	2/2
OLYMPUS OM-SYSTEM ZUIKO AUTO FISHEYE 8mm 1:2.8	M8FE TYPE-2(NMC)	
OLYMPUS OPTICAL CO., LTD. TOKYO, JAPAN		

0587

NOTE: WHEN ORDERING FOR SPARE PARTS, PLEASE CLARIFY A MODEL, PARTS NUMBER AND QUANTITY

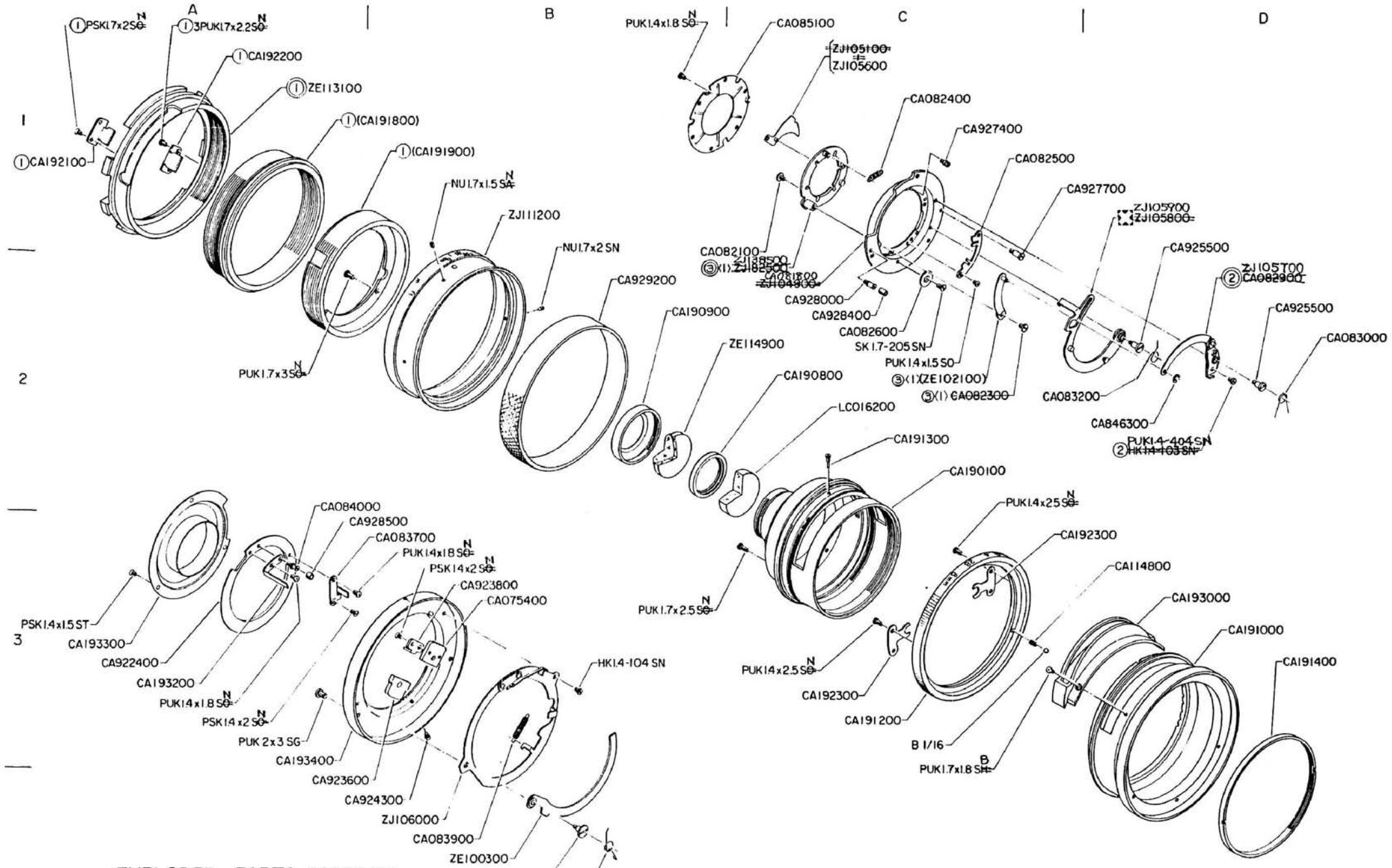

EXPLODED PARTS DIAGRAM

MODEL	HOUSE CODE or UNIT	FIG.
OLYMPUS OM-SYSTEM ZUIKO AUTO FISHEYE ~~1:2.8 f=8mm~~ 8mm 1:2.8	M8FE	2/2
OLYMPUS OPTICAL CO., LTD. TOKYO, JAPAN		

12:81

NOTE: WHEN ORDERING FOR SPARE PARTS, PLEASE CLARIFY A MODEL, PARTS NUMBER AND QUANTITY

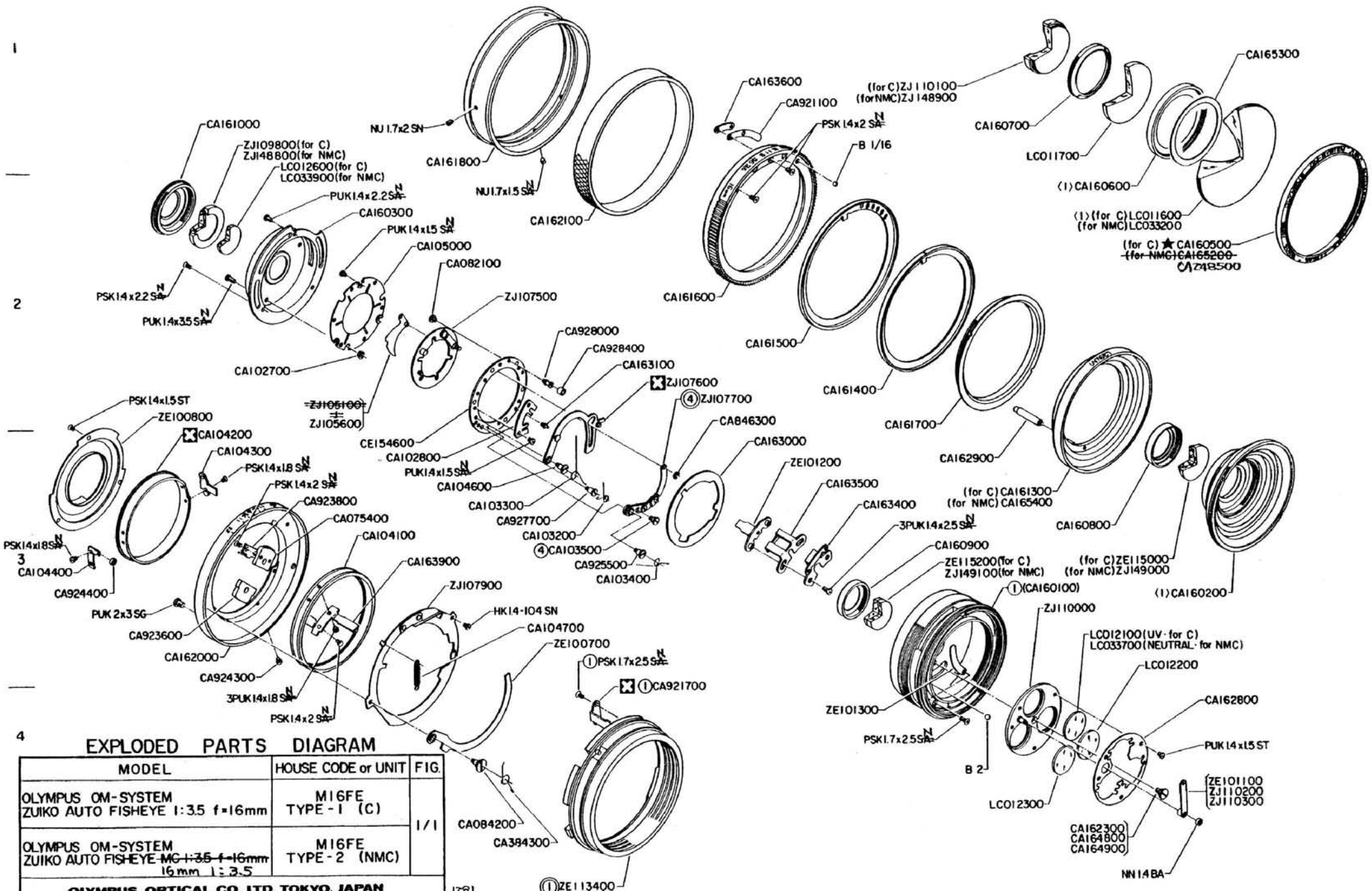

EXPLODED PARTS DIAGRAM

MODEL	HOUSE CODE or UNIT	FIG.
OLYMPUS OM-SYSTEM ZUIKO AUTO FISHEYE 1:3.5 f=16mm	M16FE TYPE-1 (C)	1/1
OLYMPUS OM-SYSTEM ZUIKO AUTO FISHEYE ~~MC 1:3.5 f=16mm~~ 16mm 1:3.5	M16FE TYPE-2 (NMC)	
OLYMPUS OPTICAL CO., LTD. TOKYO, JAPAN		

NOTE: WHEN ORDERING FOR SPARE PARTS, PLEASE CLARIFY A MODEL, PARTS NUMBER AND QUANTITY

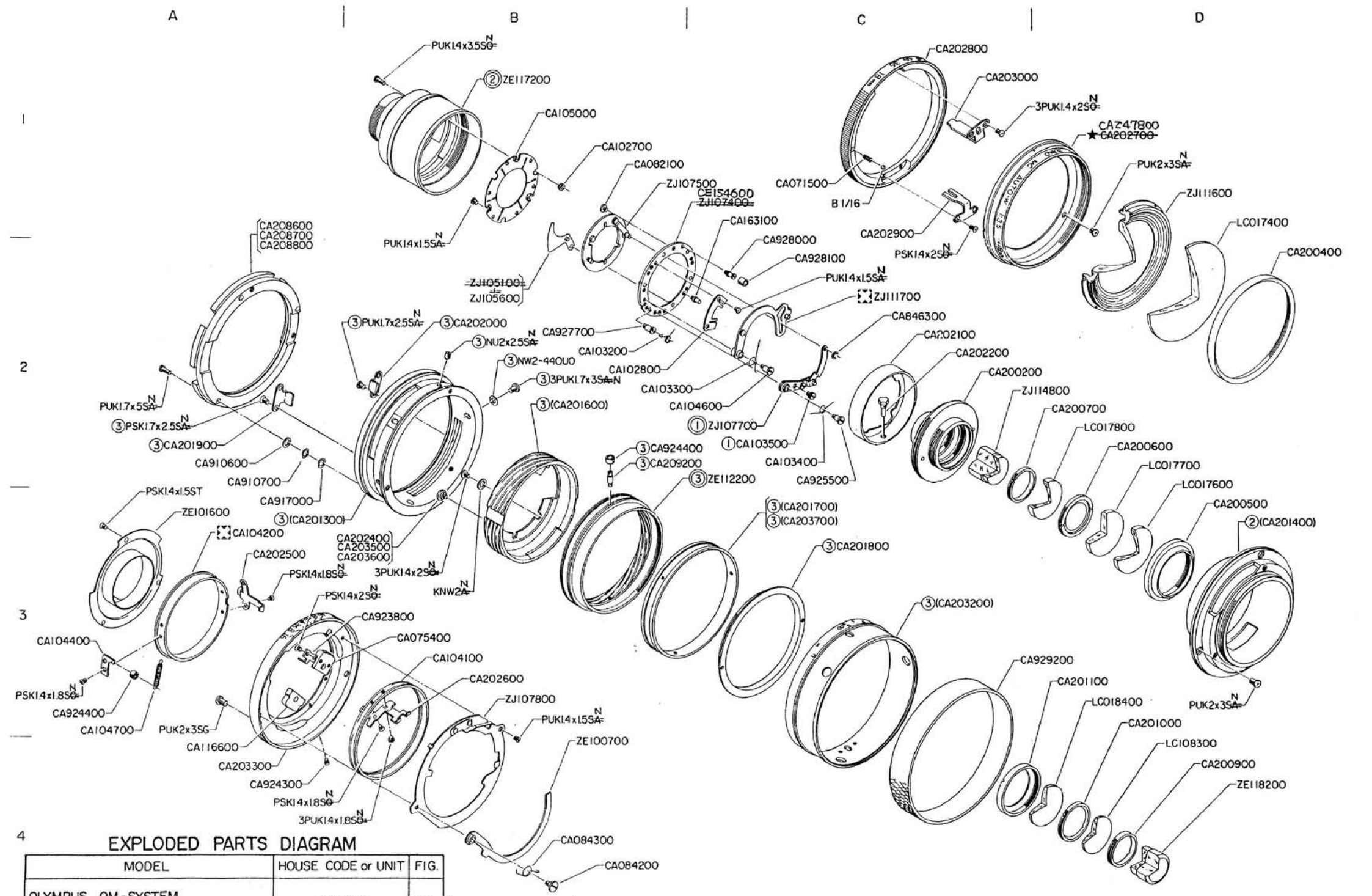

EXPLODED PARTS DIAGRAM

MODEL	HOUSE CODE or UNIT	FIG.
OLYMPUS OM-SYSTEM ZUIKO ~~MC~~ AUTO-W ~~1:3.5 f=18mm~~ 18mm 1:3.5	MW1835	1/1
OLYMPUS OPTICAL CO., LTD. TOKYO, JAPAN		

1281

NOTE: WHEN ORDERING FOR SPARE PARTS, PLEASE CLARIFY A MODEL, PARTS NUMBER AND QUANTITY.

A B C D

1

3

4

EXPLODED PARTS DIAGRAM

MODEL	HOUSE CODE or UNIT	FIG.
OLYMPUS OM-SYSTEM ZUIKO MACRO 1:3.5 f=20mm	M20MC TYPE-1(C)	1/1
OLYMPUS OM-SYSTEM ZUIKO MC MACRO 1:3.5 f=20mm	M20MC TYPE-2(MC)	
OLYMPUS OM-SYSTEM ZUIKO MC MACRO 1:3.5 f=20mm	M20MC TYPE-3(NMC)	

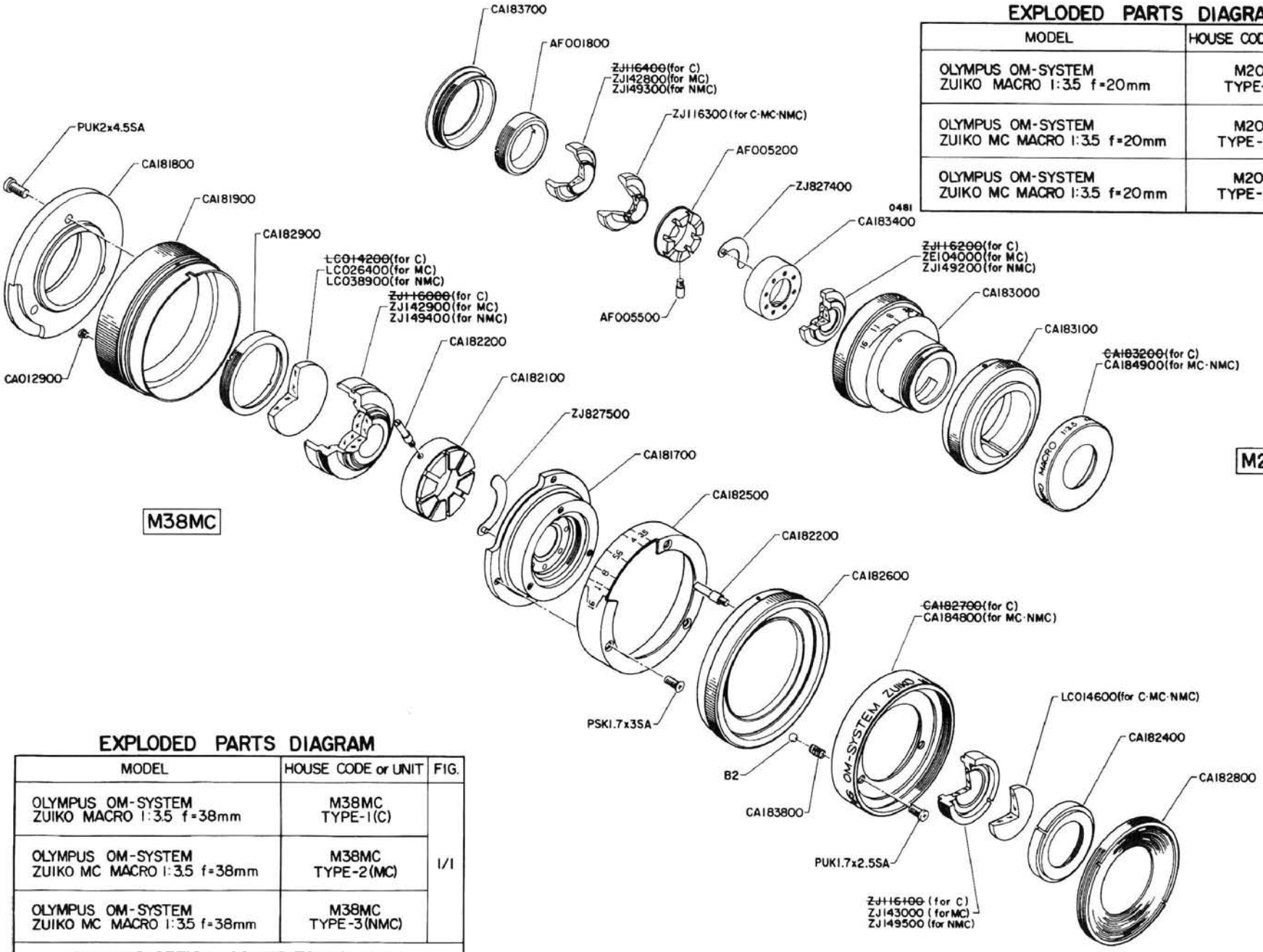

EXPLODED PARTS DIAGRAM

MODEL	HOUSE CODE or UNIT	FIG.
OLYMPUS OM-SYSTEM ZUIKO MACRO 1:3.5 f=38mm	M38MC TYPE-1(C)	1/1
OLYMPUS OM-SYSTEM ZUIKO MC MACRO 1:3.5 f=38mm	M38MC TYPE-2(MC)	
OLYMPUS OM-SYSTEM ZUIKO MC MACRO 1:3.5 f=38mm	M38MC TYPE-3(NMC)	
OLYMPUS OPTICAL CO., LTD. TOKYO, JAPAN		

0481

NOTE: WHEN ORDERING FOR SPARE PARTS, PLEASE CLARIFY A MODEL or HOUSE CODE, PARTS NUMBER AND QUANTITY.

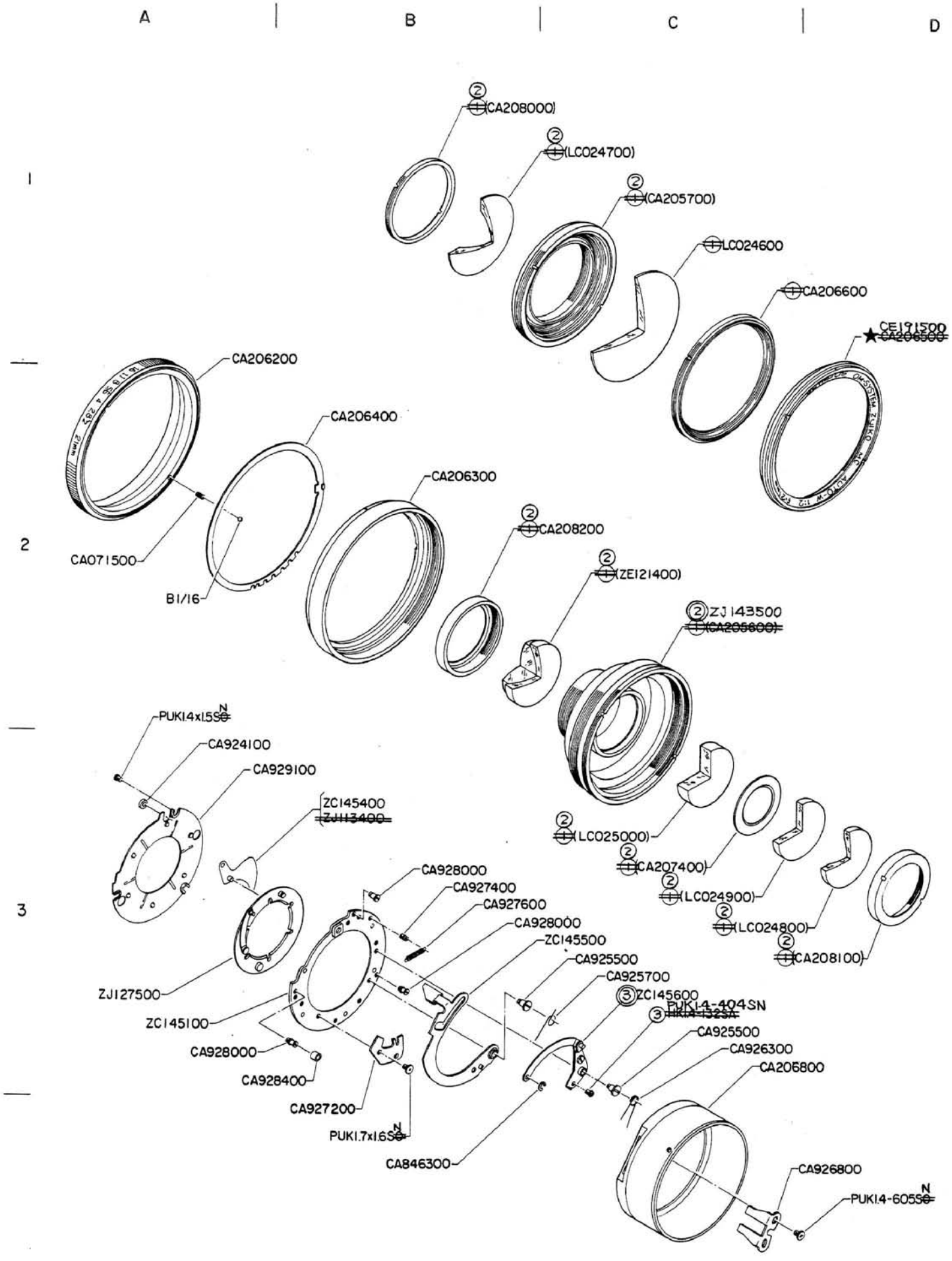

EXPLODED PARTS DIAGRAM

MODEL	HOUSE CODE or UNIT	FIG.
OLYMPUS OM-SYSTEM AUTO-W ~~F=2 f=21mm~~ 21mm 1:2	MW-2120	1/2
OLYMPUS OPTICAL CO., LTD. TOKYO, JAPAN		

[281]

NOTE: WHEN ORDERING FOR SPARE PARTS, PLEASE CLARIFY A MODEL or HOUSE CODE, PARTS NUMBER AND QUANTITY.

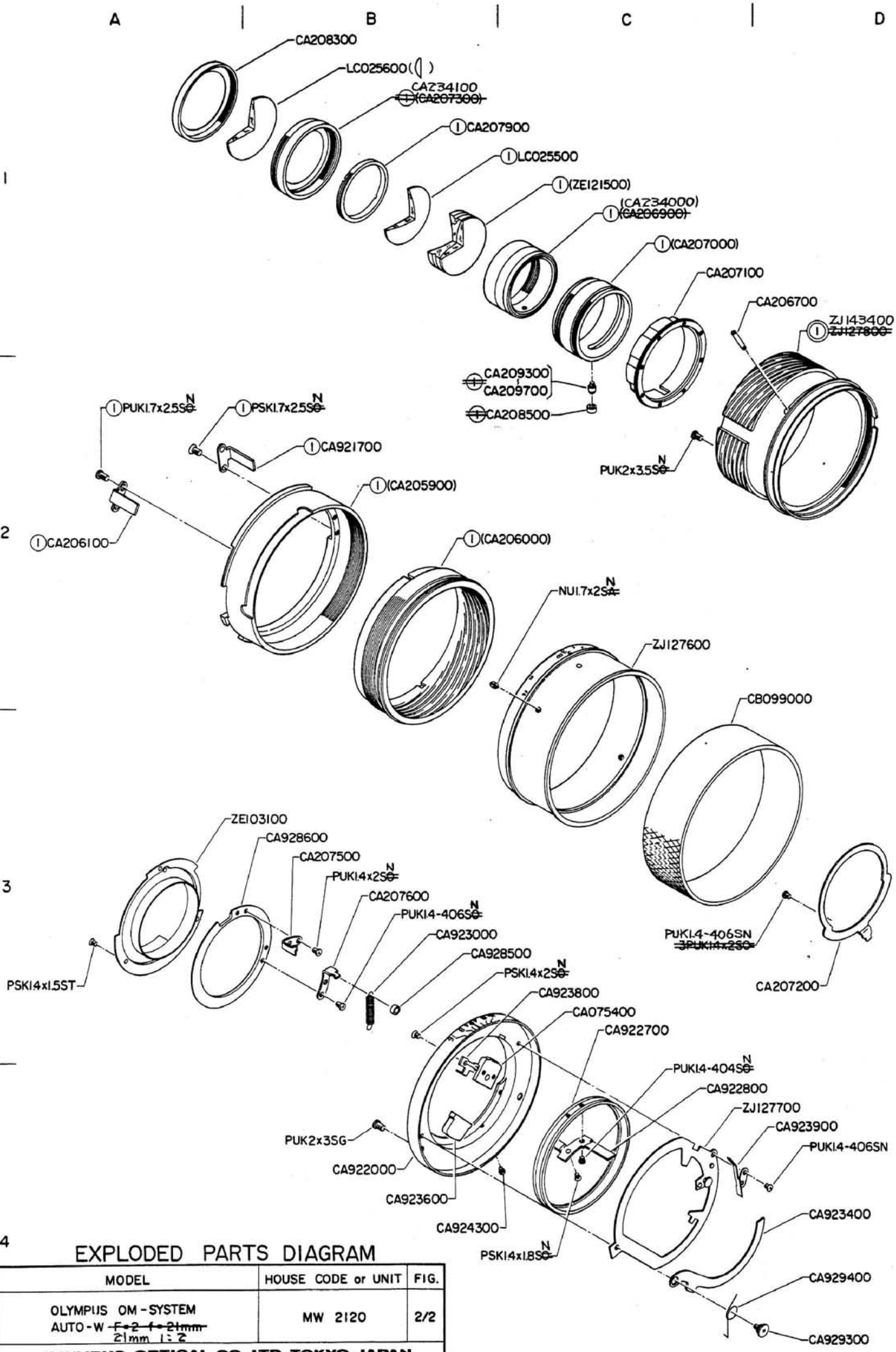

EXPLODED PARTS DIAGRAM

MODEL	HOUSE CODE or UNIT	FIG.
OLYMPUS OM-SYSTEM AUTO-W ~~f=2 f=21mm~~ 21mm 1:2	MW 2120	2/2
OLYMPUS OPTICAL CO., LTD. TOKYO, JAPAN		

0487

NOTE: WHEN ORDERING FOR SPARE PARTS, PLEASE CLARIFY A MODEL or HOUSE CODE, PARTS NUMBER AND QUANTITY.

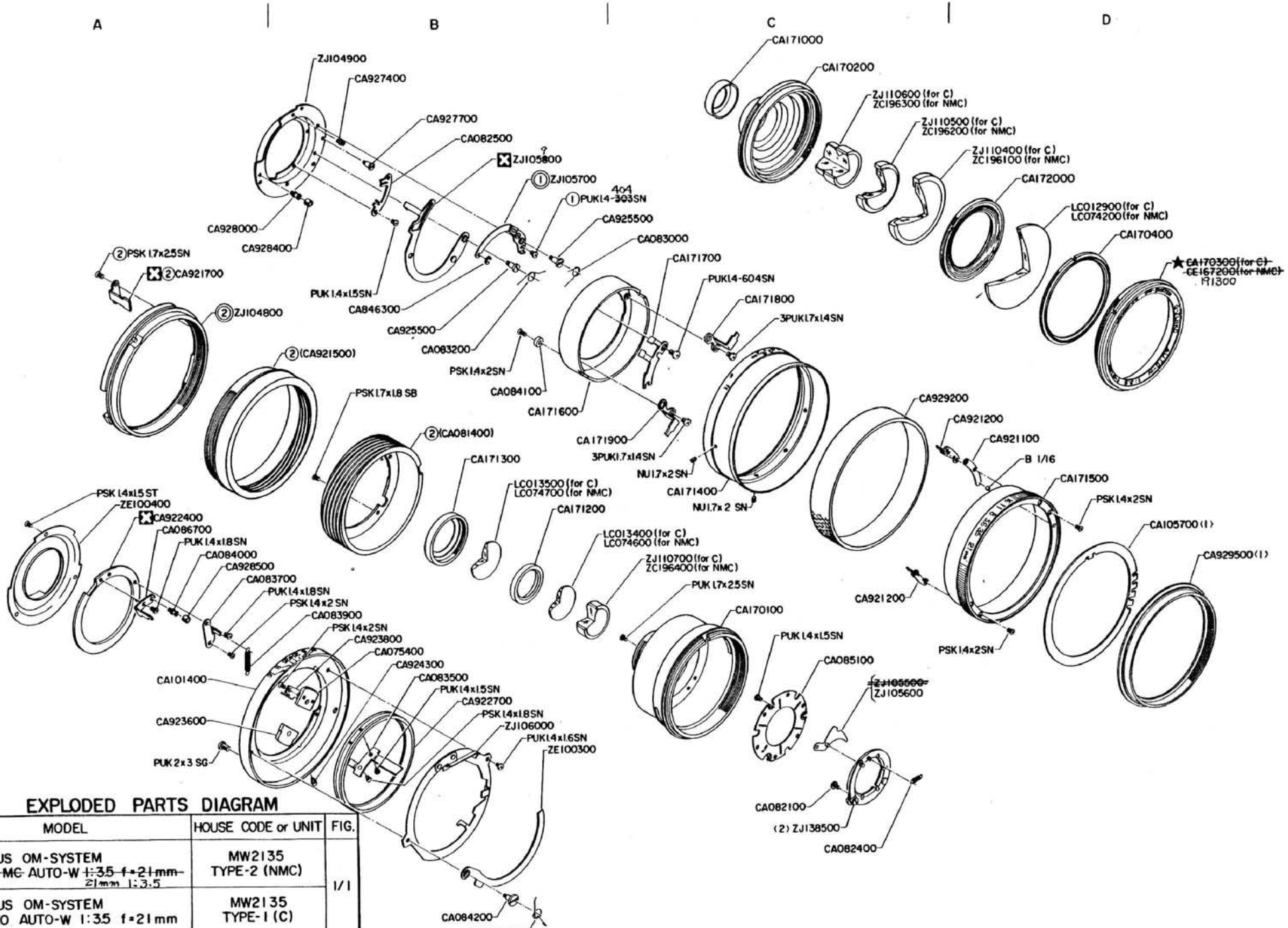

EXPLODED PARTS DIAGRAM

MODEL	HOUSE CODE or UNIT	FIG.
OLYMPUS OM-SYSTEM ZUIKO ~~MC~~ AUTO-W ~~1:3.5 f=21mm~~ 21mm 1:3.5	MW2135 TYPE-2 (NMC)	1/1
OLYMPUS OM-SYSTEM G. ZUIKO AUTO-W 1:3.5 f=21mm	MW2135 TYPE-1 (C)	
OLYMPUS OPTICAL CO., LTD. TOKYO, JAPAN		

12.81
~~0481~~

NOTE : WHEN ORDERING FOR SPARE PARTS, PLEASE CLARIFY A MODEL or HOUSE CODE, PARTS NUMBER AND QUANTITY.

MW2135 変更部品表 IMPROVED PARTS TABLE

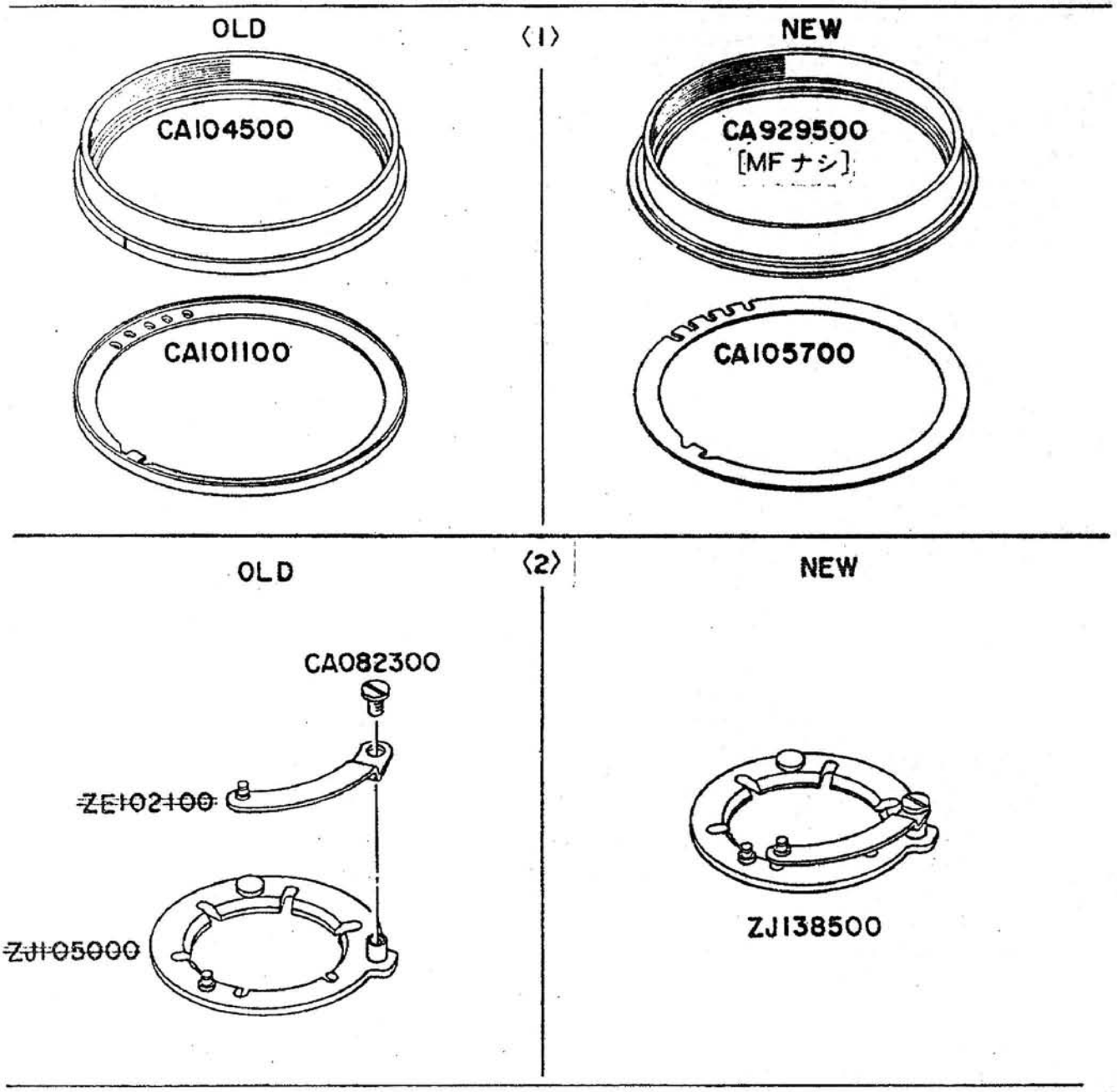

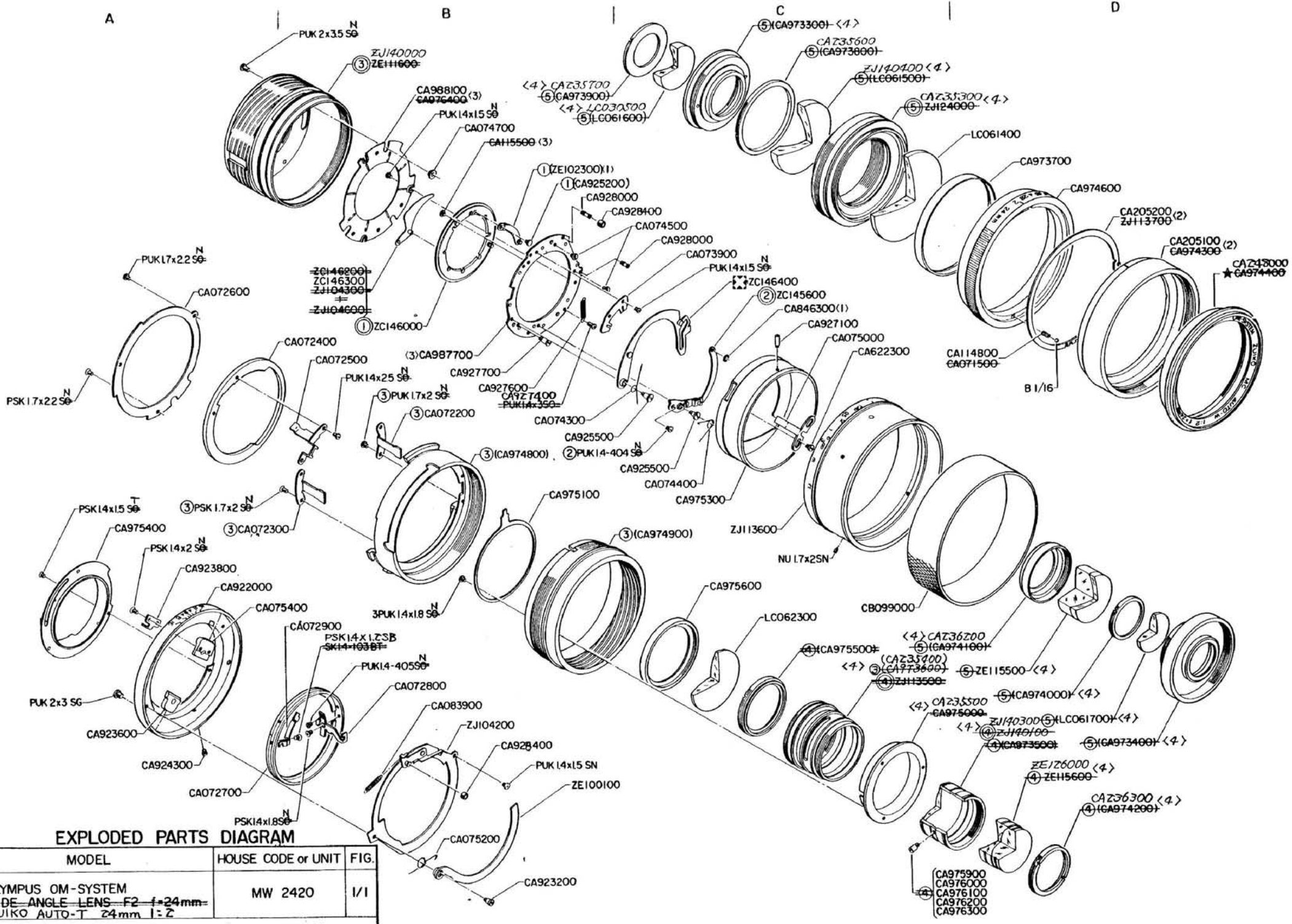

EXPLODED PARTS DIAGRAM

MODEL	HOUSE CODE or UNIT	FIG.
OLYMPUS OM-SYSTEM ~~WIDE ANGLE LENS F2 f=24mm~~ ZUIKO AUTO-T 24mm 1:2	MW 2420	1/1
OLYMPUS OPTICAL CO., LTD. TOKYO, JAPAN		

1281

NOTE: WHEN ORDERING FOR SPARE PARTS, PLEASE CLARIFY A MODEL, PARTS NUMBER AND QUANTITY

〈1〉

OLD

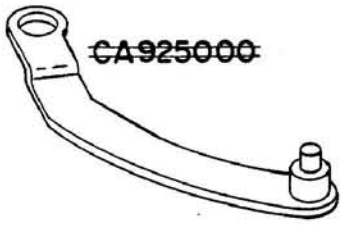
~~CA925000~~

NEW

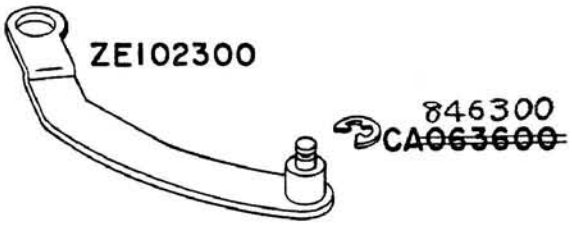
ZE102300
846300
~~CA063600~~

〈2〉

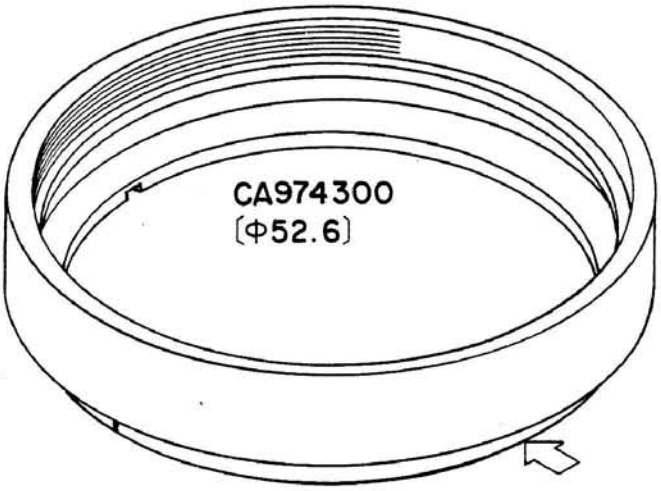
CA974300
〔Φ52.6〕

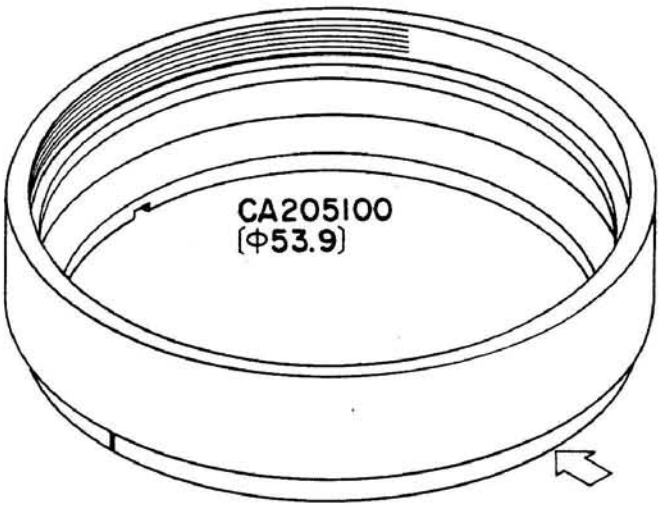
CA205100
〔Φ53.9〕

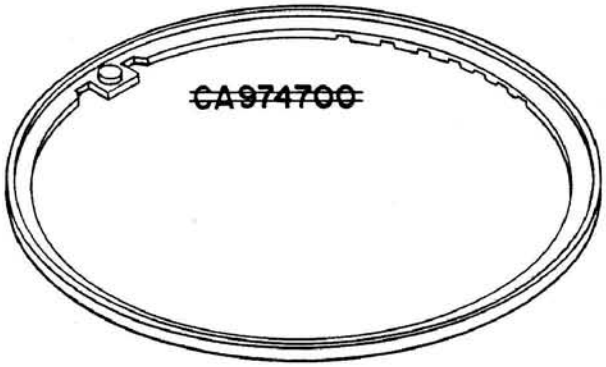
~~CA974700~~

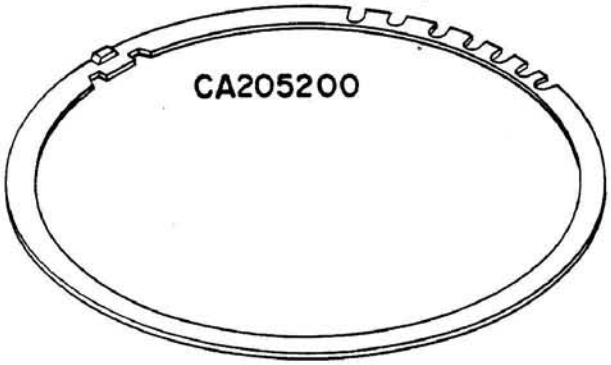
CA205200

OLD	(3)	NEW
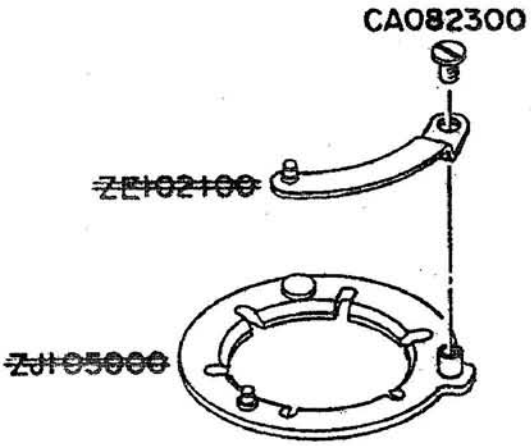		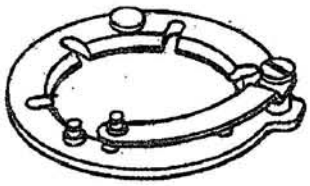

〈4〉

OLD

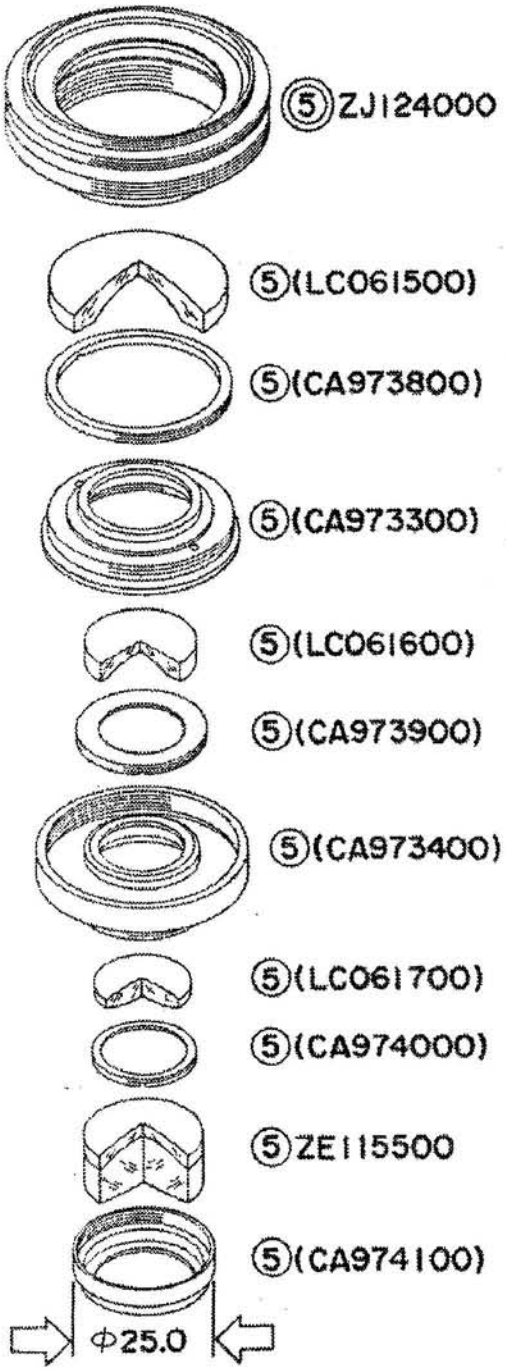
⑤ZJ124000
⑤(LC061500)
⑤(CA973800)
⑤(CA973300)
⑤(LC061600)
⑤(CA973900)
⑤(CA973400)
⑤(LC061700)
⑤(CA974000)
⑤ZE115500
⑤(CA974100)
Φ25.0

NEW

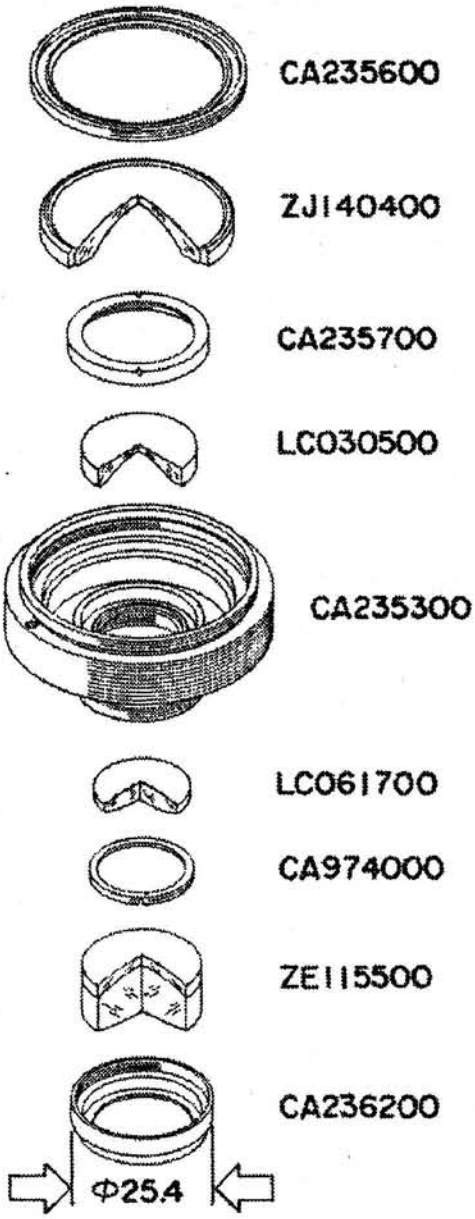
CA235600
ZJ140400
CA235700
LC030500
CA235300
LC061700
CA974000
ZE115500
CA236200
Φ25.4

〈4〉

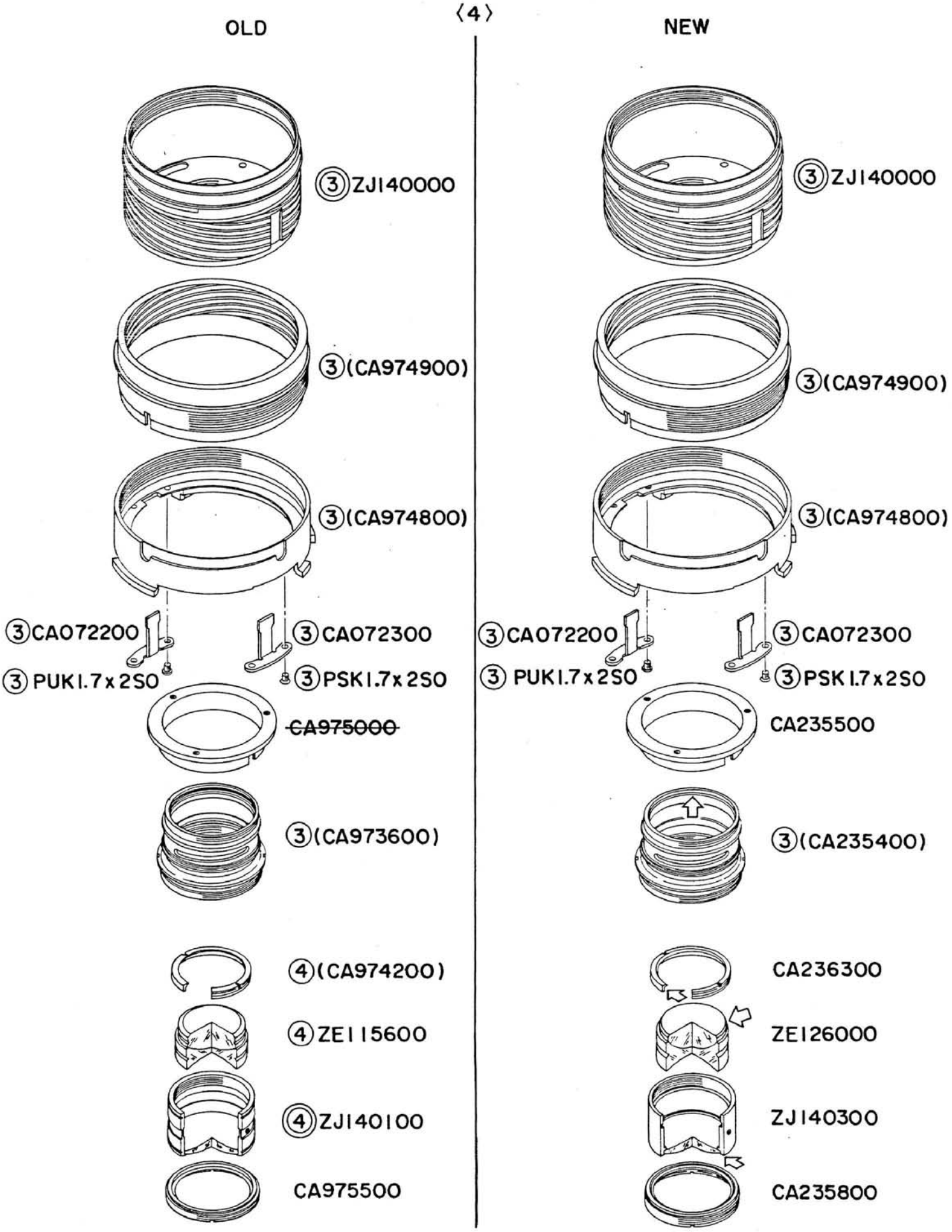
OLD
NEW
③ZJ140000
③(CA974900)
③(CA974800)
③CA072200
③CA072300
③PUK1.7x2S0
③PSK1.7x2S0
~~CA975000~~
③(CA973600)
④(CA974200)
④ZE115600
④ZJ140100
CA975500
③ZJ140000
③(CA974900)
③(CA974800)
③CA072200
③CA072300
③PUK1.7x2S0
③PSK1.7x2S0
CA235500
③(CA235400)
CA236300
ZE126000
ZJ140300
CA235800

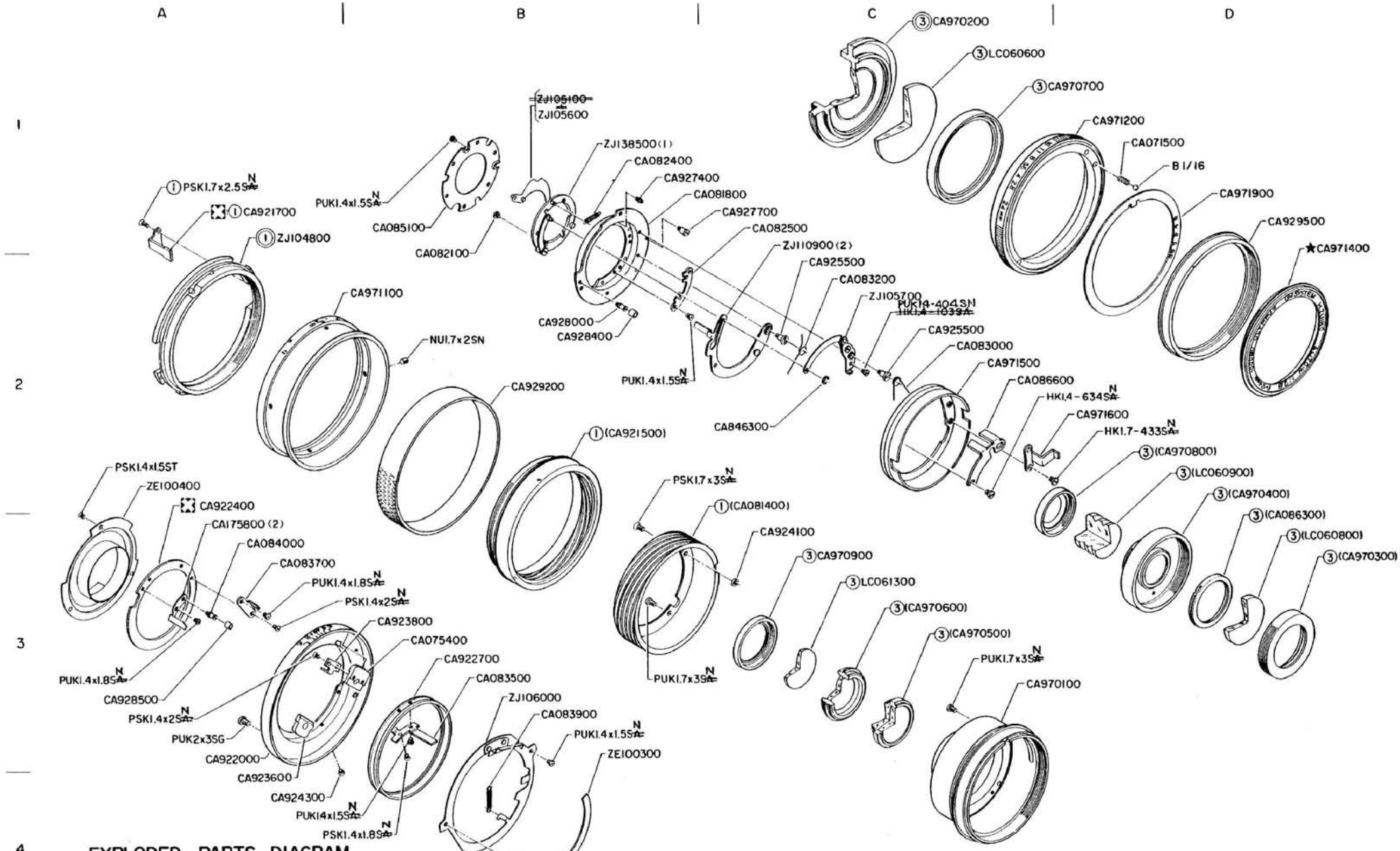

EXPLODED PARTS DIAGRAM

MODEL	HOUSE CODE or UNIT	FIG.
OLYMPUS OM-SYSTEM H ZUIKO AUTO-W 1:2.8 f=24mm	MW2428 TYPE - I	1/1
OLYMPUS OPTICAL CO., LTD. TOKYO, JAPAN		

1281
~~1180~~

NOTE: WHEN ORDERING FOR SPARE PARTS, PLEASE CLARIFY A MODEL, PARTS NUMBER AND QUANTITY

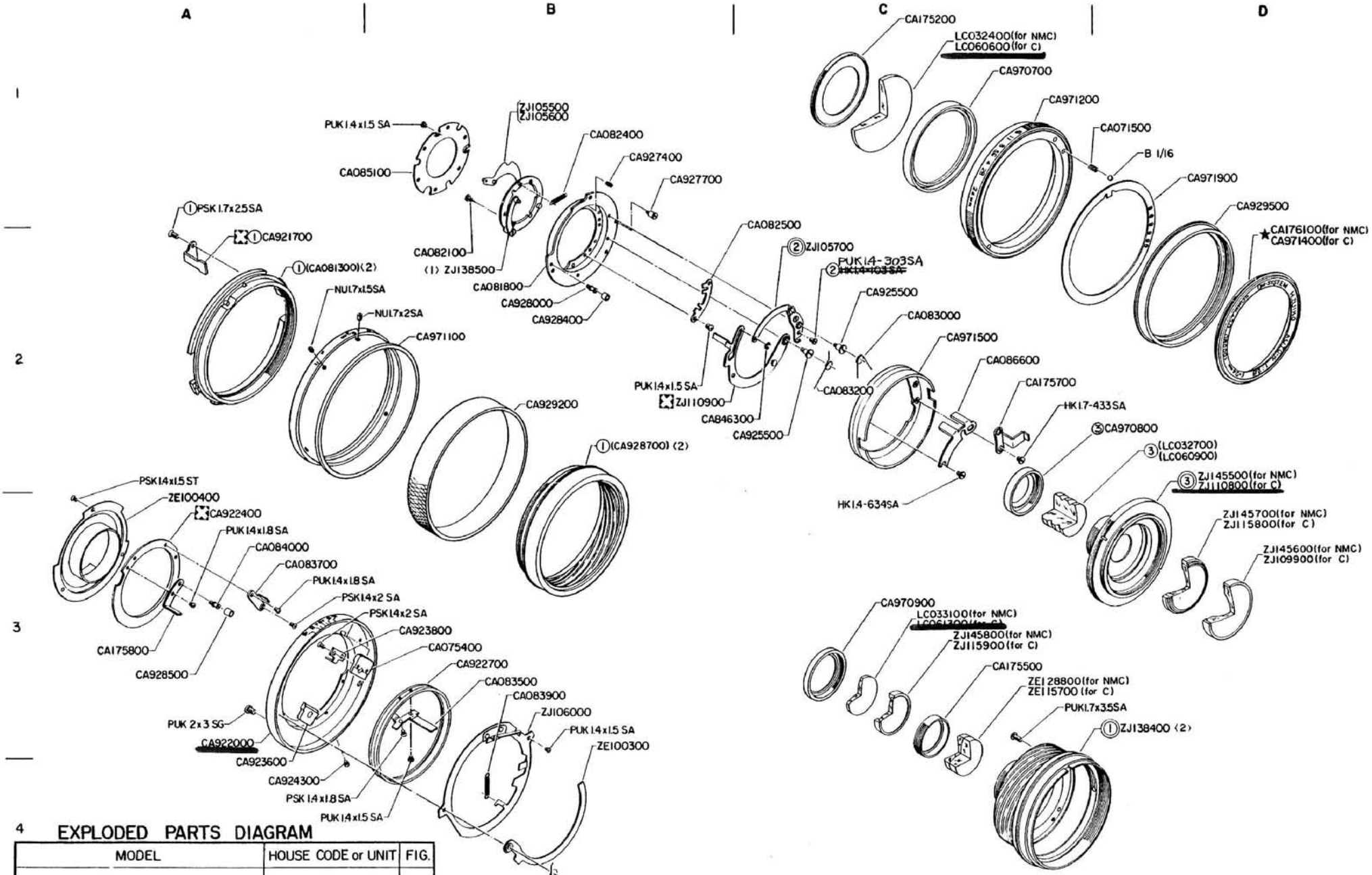

EXPLODED PARTS DIAGRAM

MODEL	HOUSE CODE or UNIT	FIG.
OLYMPUS OM-SYSTEM H. ZUIKO AUTO-W 1:2.8 f=24mm	MW2428 TYPE-2 (C)	1/1
OLYMPUS OM-SYSTEM ZUIKO MC AUTO-W 1:2.8 f=24mm	MW2428 TYPE-3 (NMC)	
OLYMPUS OPTICAL CO., LTD. TOKYO, JAPAN		

NOTE: WHEN ORDERING FOR SPARE PARTS; PLEASE CLARIFY A MODEL; PARTS NUMBER AND QUANTITY.

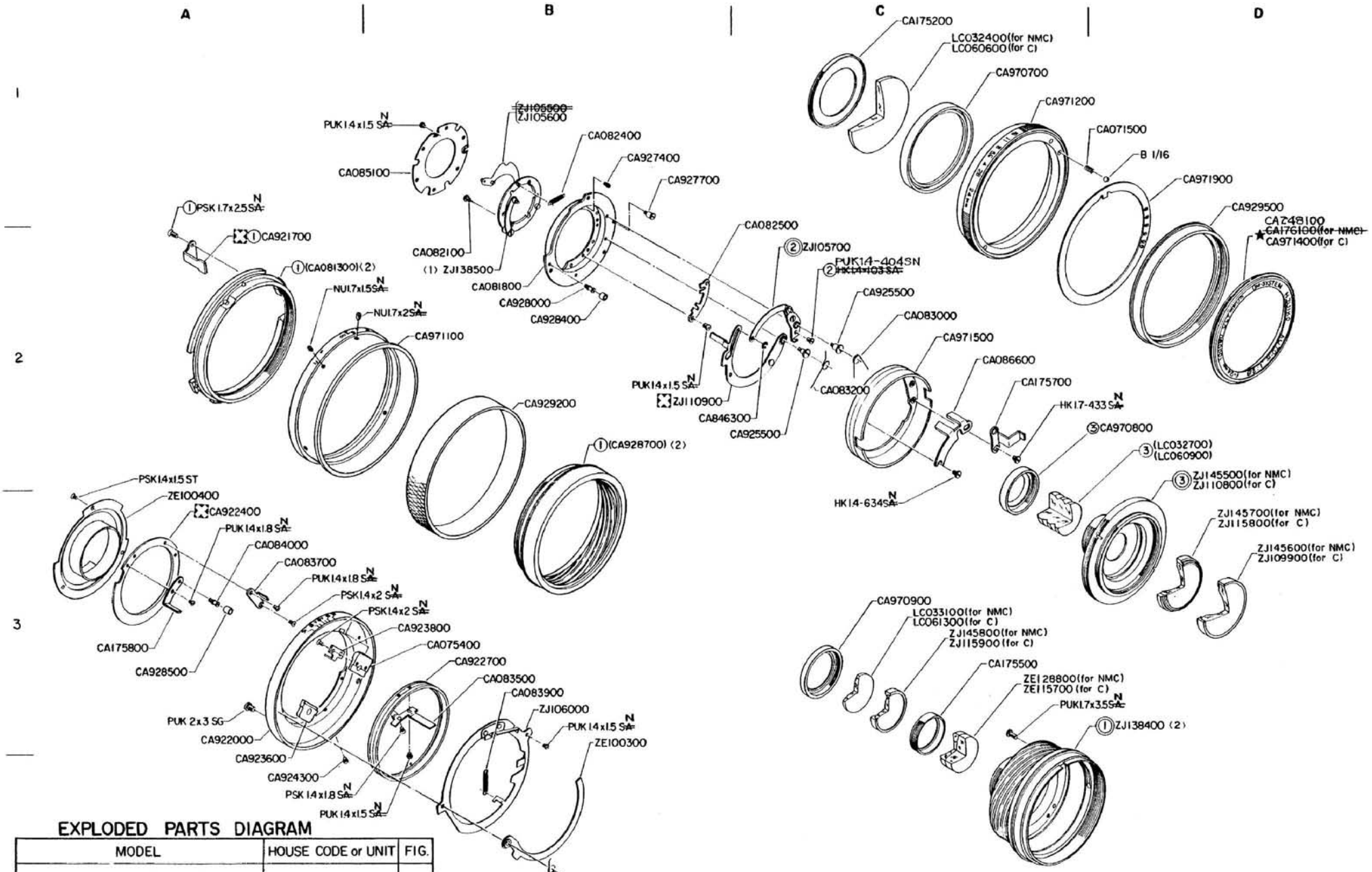

EXPLODED PARTS DIAGRAM

MODEL	HOUSE CODE or UNIT	FIG.
OLYMPUS OM-SYSTEM H. ZUIKO AUTO-W 1:2.8 f=24mm	MW2428 TYPE-2 (C)	1/1
OLYMPUS OM-SYSTEM ZUIKO-~~MC~~ AUTO-W ~~1:2.8 f=24mm~~ 24mm 1:2.8	MW2428 TYPE-3 (NMC)	
OLYMPUS OPTICAL CO., LTD. TOKYO, JAPAN		1281 ~~1180~~

NOTE: WHEN ORDERING FOR SPARE PARTS, PLEASE CLARIFY A MODEL, PARTS NUMBER AND QUANTITY.

MW2428
(TYPE-1)

変更部品表 IMPROVED PARTS TABLE

〈1〉

OLD

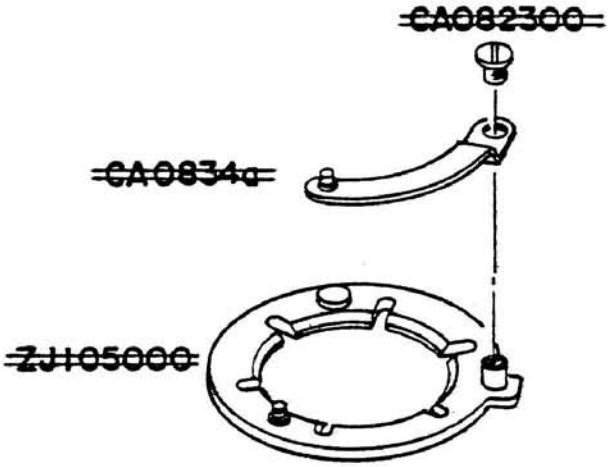

NEW

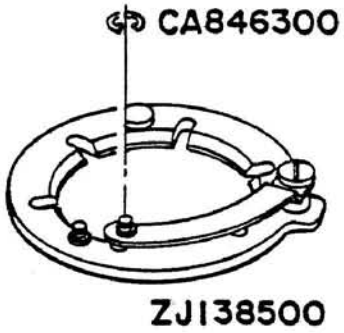

〈2〉

OLD

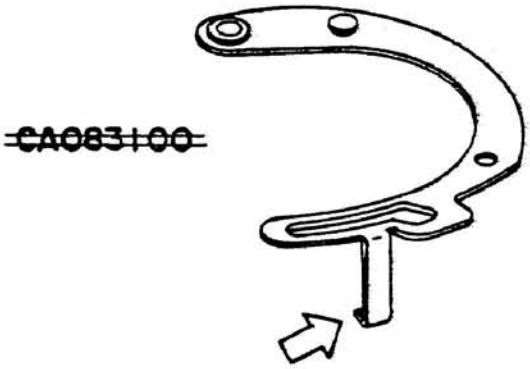

NEW

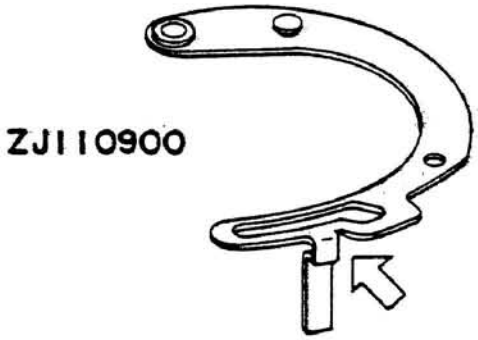

MW2428
(TYPE-2·3) 変更部品表

IMPROVED PARTS TABLE

(1)

OLD

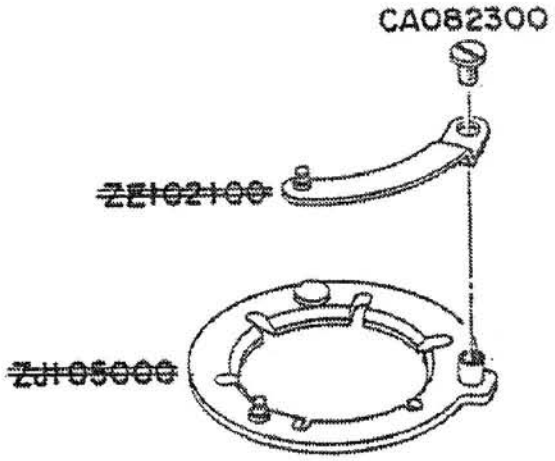

NEW

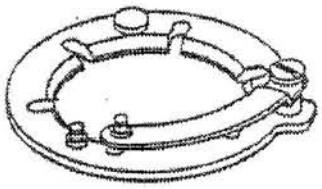

ZJ138500

(2)

OLD

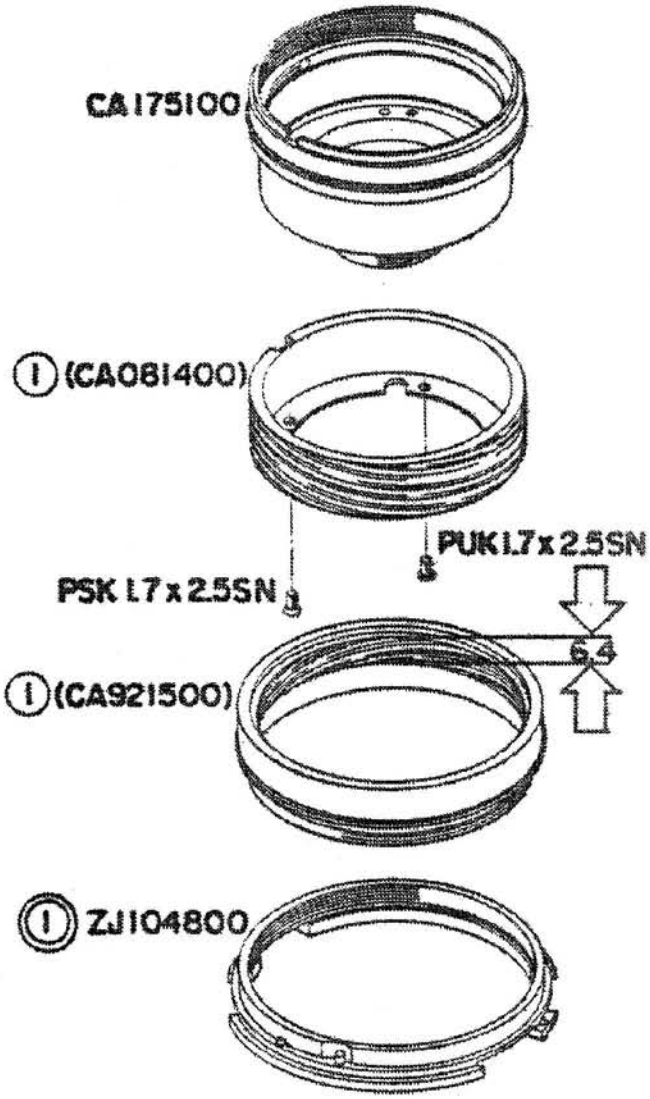

NEW

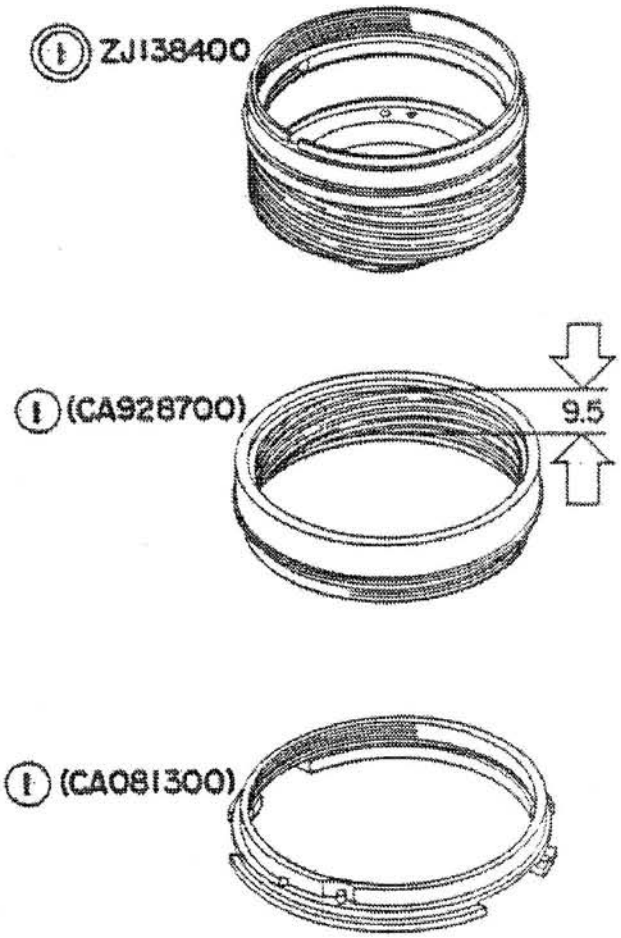

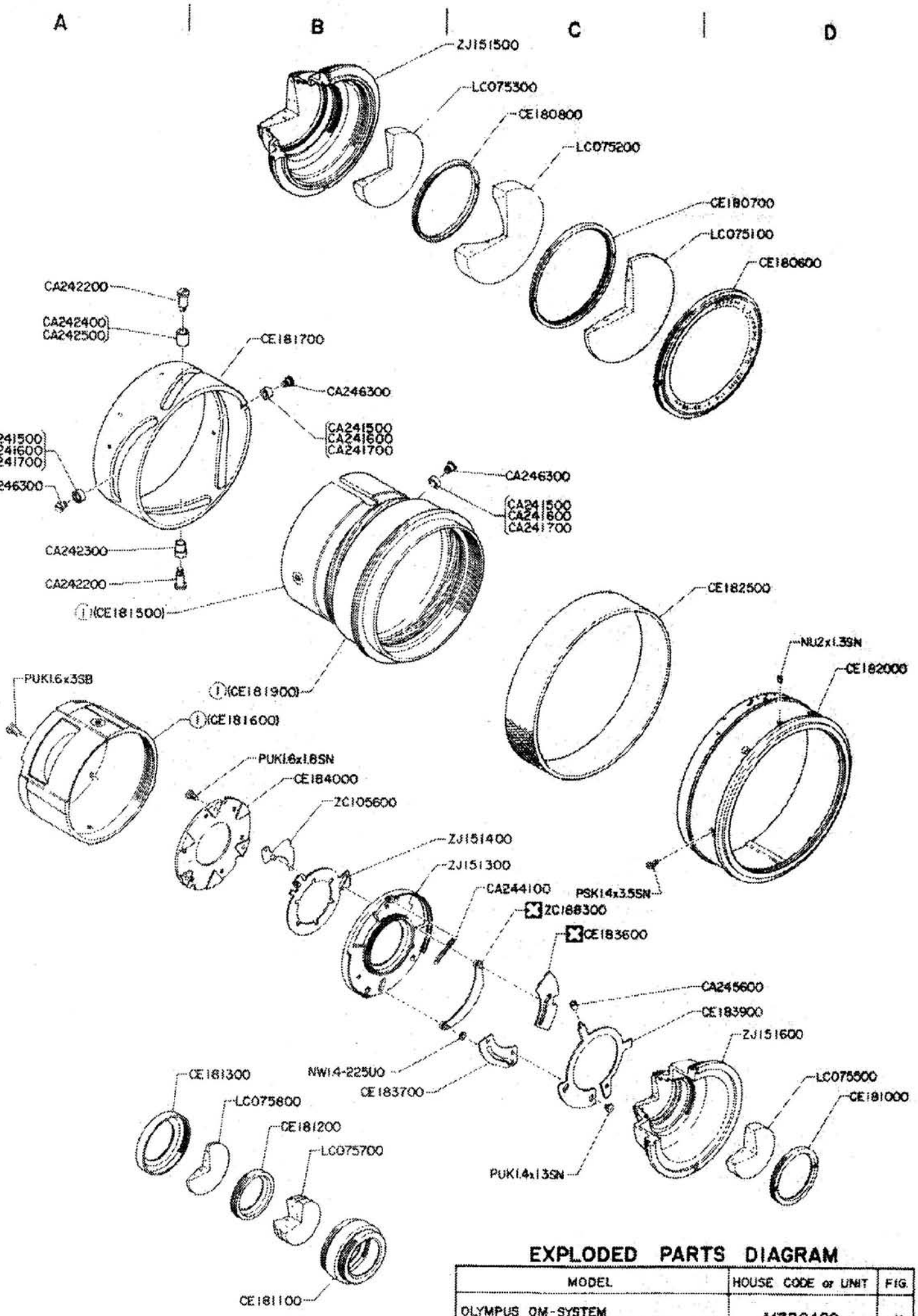

EXPLODED PARTS DIAGRAM

MODEL	HOUSE CODE or UNIT	FIG.
OLYMPUS OM-SYSTEM S ZUIKO MC AUTO-ZOOM 28~48mm F4	MZ2848S	1/2

OLYMPUS OPTICAL CO., LTD. TOKYO, JAPAN

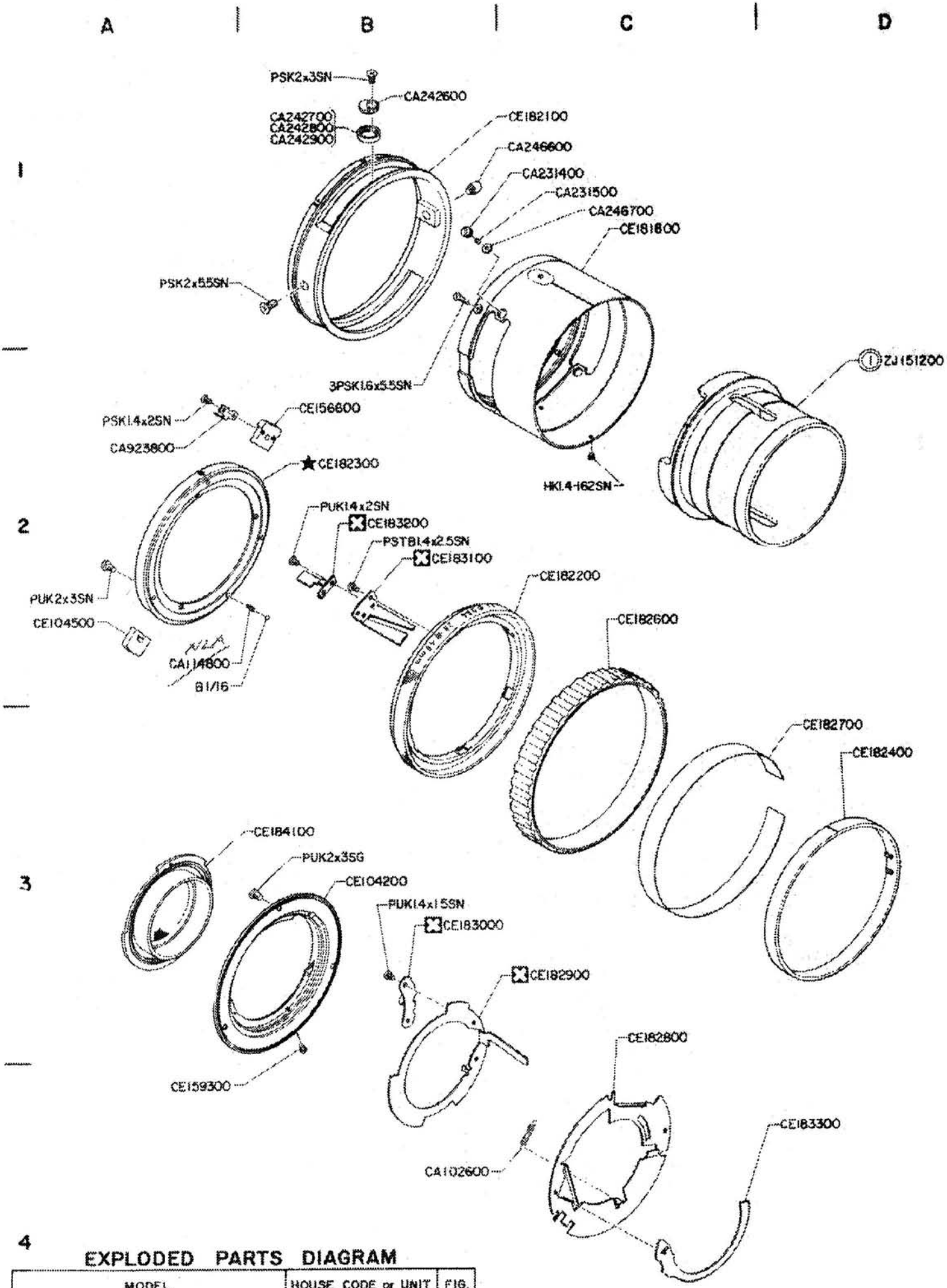

EXPLODED PARTS DIAGRAM

MODEL	HOUSE CODE or UNIT	FIG.
OLYMPUS OM-SYSTEM S ZUIKO MC AUTO-ZOOM 28-48mm F4	MZ2848S	2/2

OLYMPUS OPTICAL CO., LTD. TOKYO, JAPAN

0282

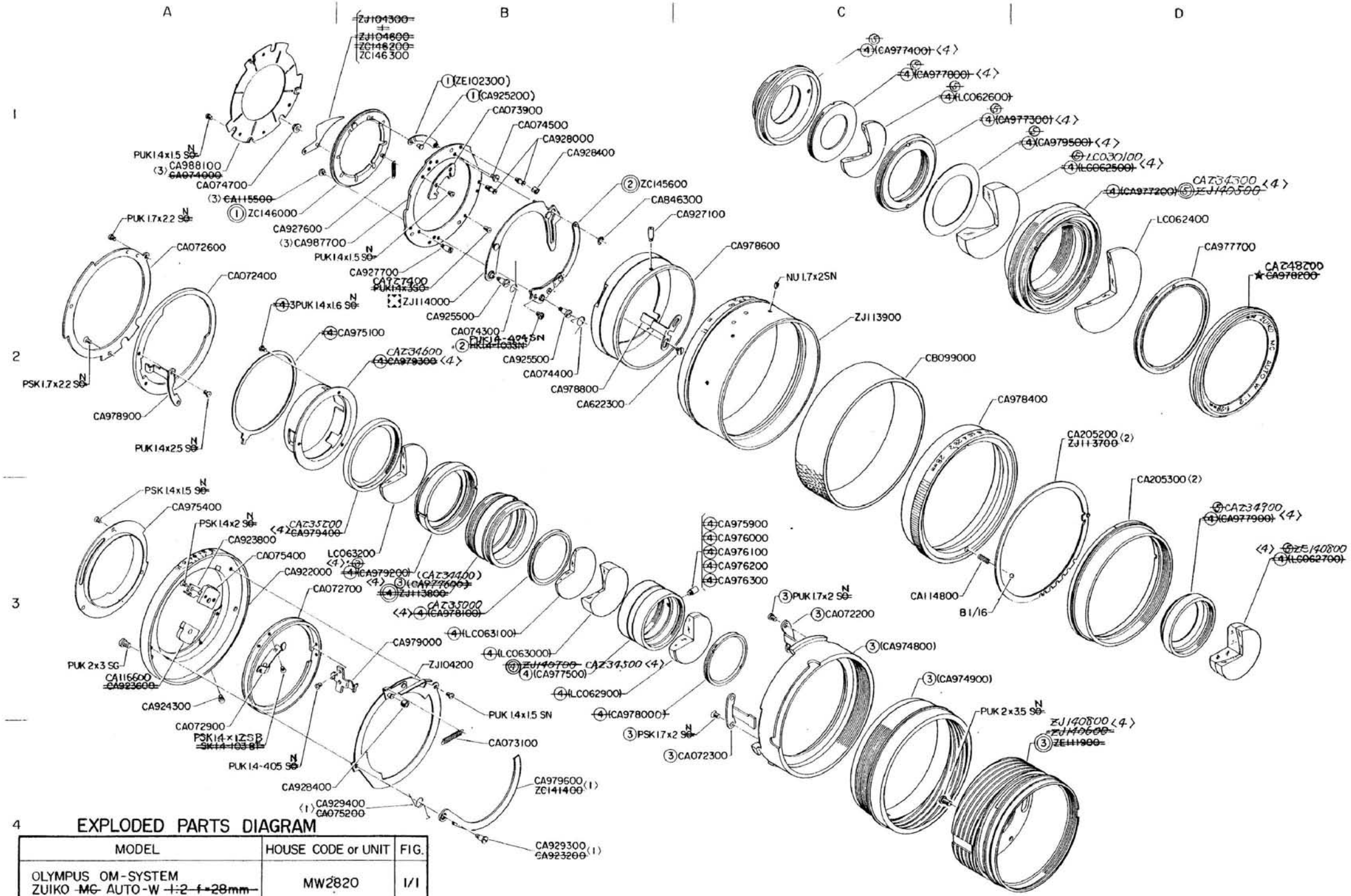

EXPLODED PARTS DIAGRAM

MODEL	HOUSE CODE or UNIT	FIG.
OLYMPUS OM-SYSTEM ZUIKO ~~MC~~ AUTO-W ~~1:2 f=28mm~~ 28mm 1:2	MW2820	1/1
OLYMPUS OPTICAL CO., LTD. TOKYO, JAPAN		

1281

NOTE : WHEN ORDERING FOR SPARE PARTS, PLEASE CLARIFY A MODEL, PARTS NUMBER AND QUANTITY.

MW2820 変更部品表 IMPROVED PARTS TABLE

(1)

OLD

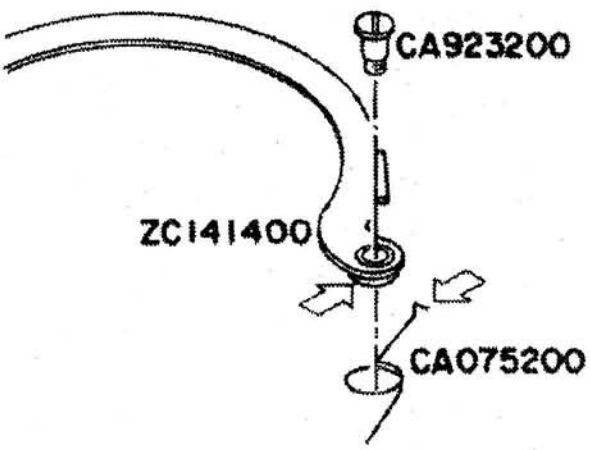

NEW

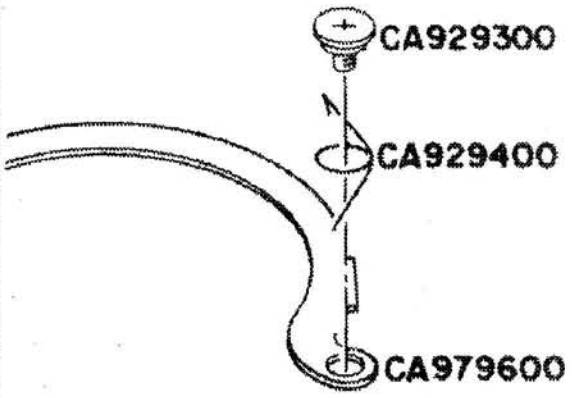

(2)

OLD

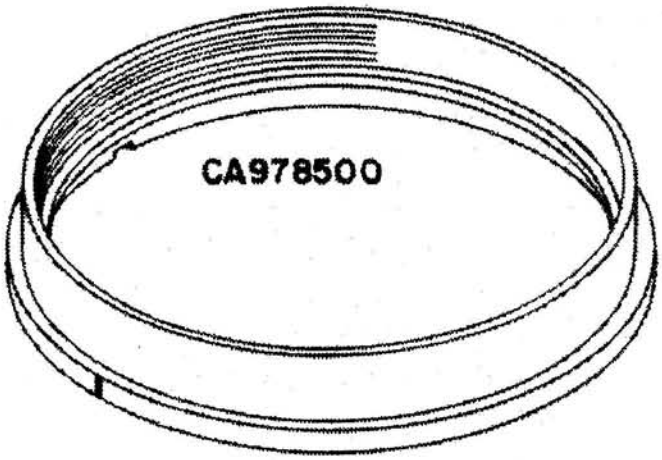

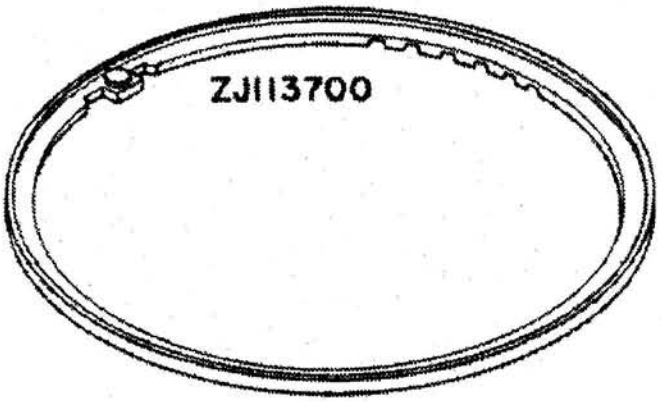

NEW

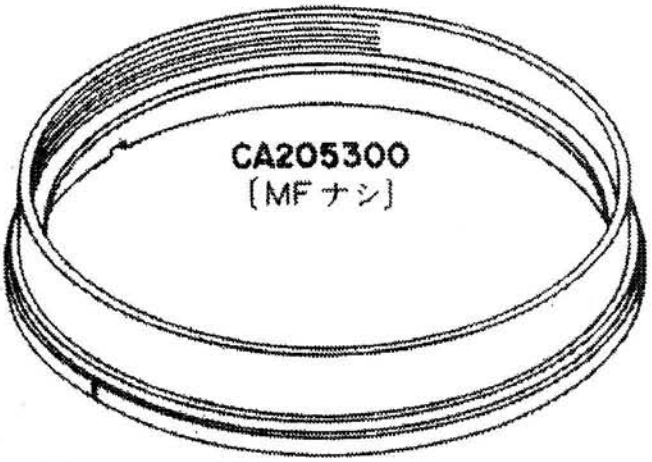

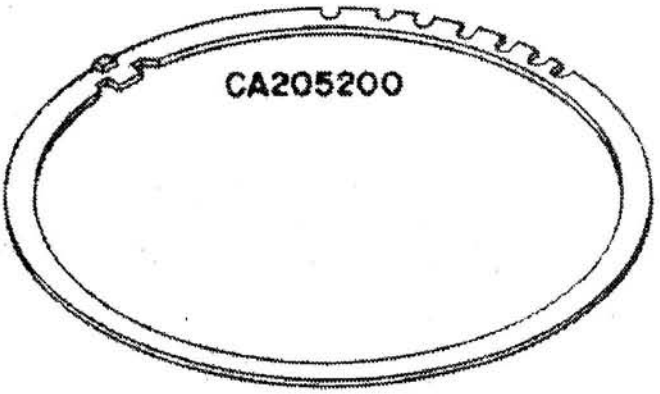

MW2820 変更部品表 IMPROVED PARTS TABLE

OLD	(3)	NEW
CA082300 ~~ZE102100~~ ~~ZJ105000~~		ZJ138500

〈4〉

OLD

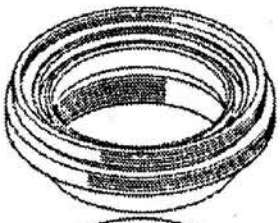

⑤ZJ140500

⑤(LC062500)

⑤(CA979500)

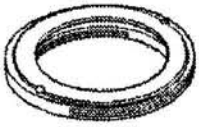

⑤(CA977300)

⑤(LC062600)

⑤(CA977800)

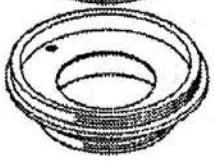

⑤(CA977400)

⑤(LC062700)

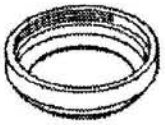

⑤(CA977900)
[25ネジ]

NEW

CA234700

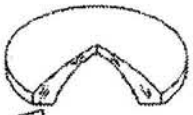

LC030100

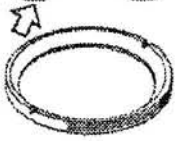

CA234800

LC062600

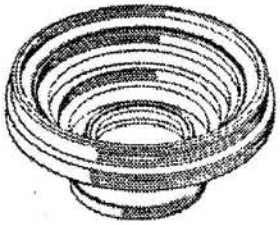

CA234300

ZE125600

CA234900
[24ネジ]

〈4〉

OLD

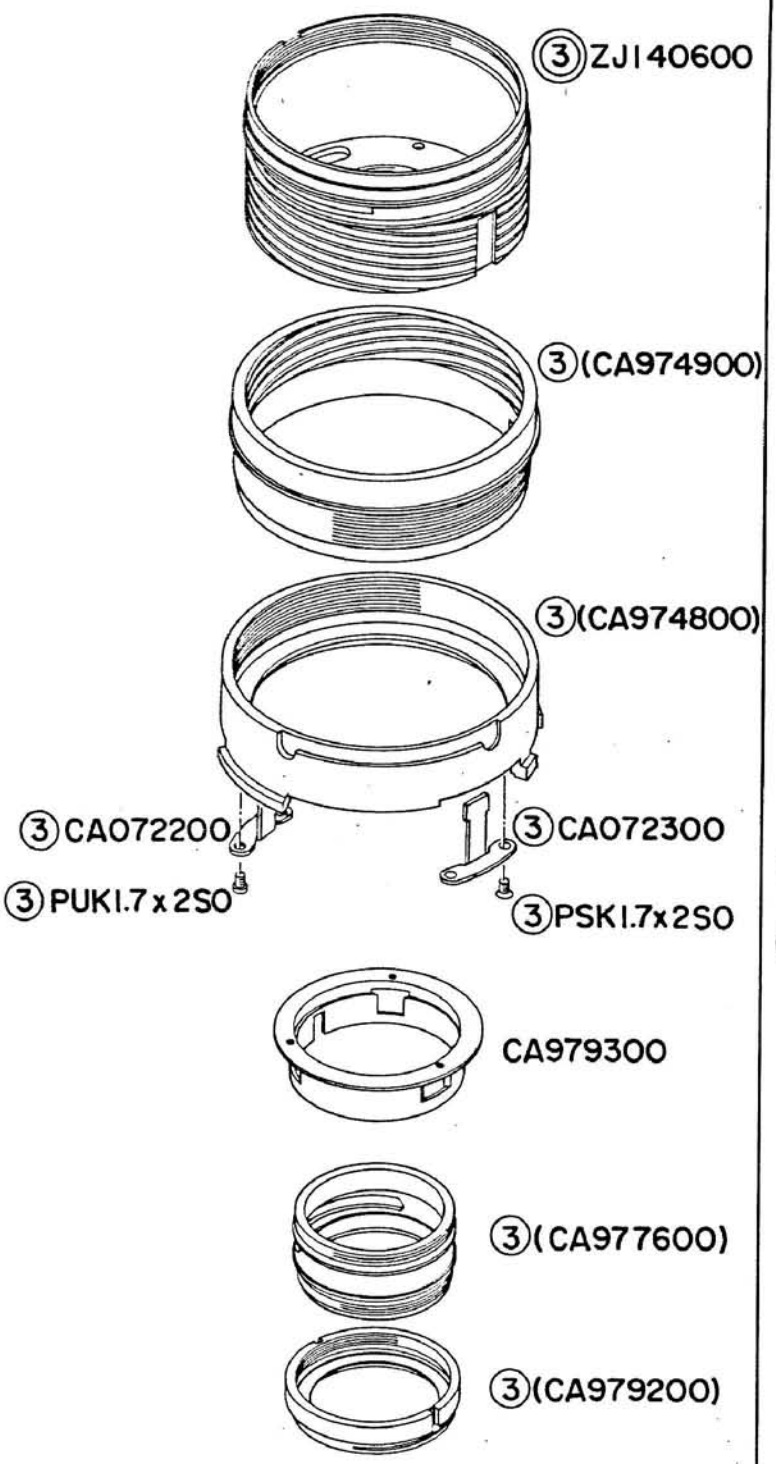
③ZJ140600
③(CA974900)
③(CA974800)
③CA072200
③PUK1.7x2S0
③CA072300
③PSK1.7x2S0
CA979300
③(CA977600)
③(CA979200)

NEW

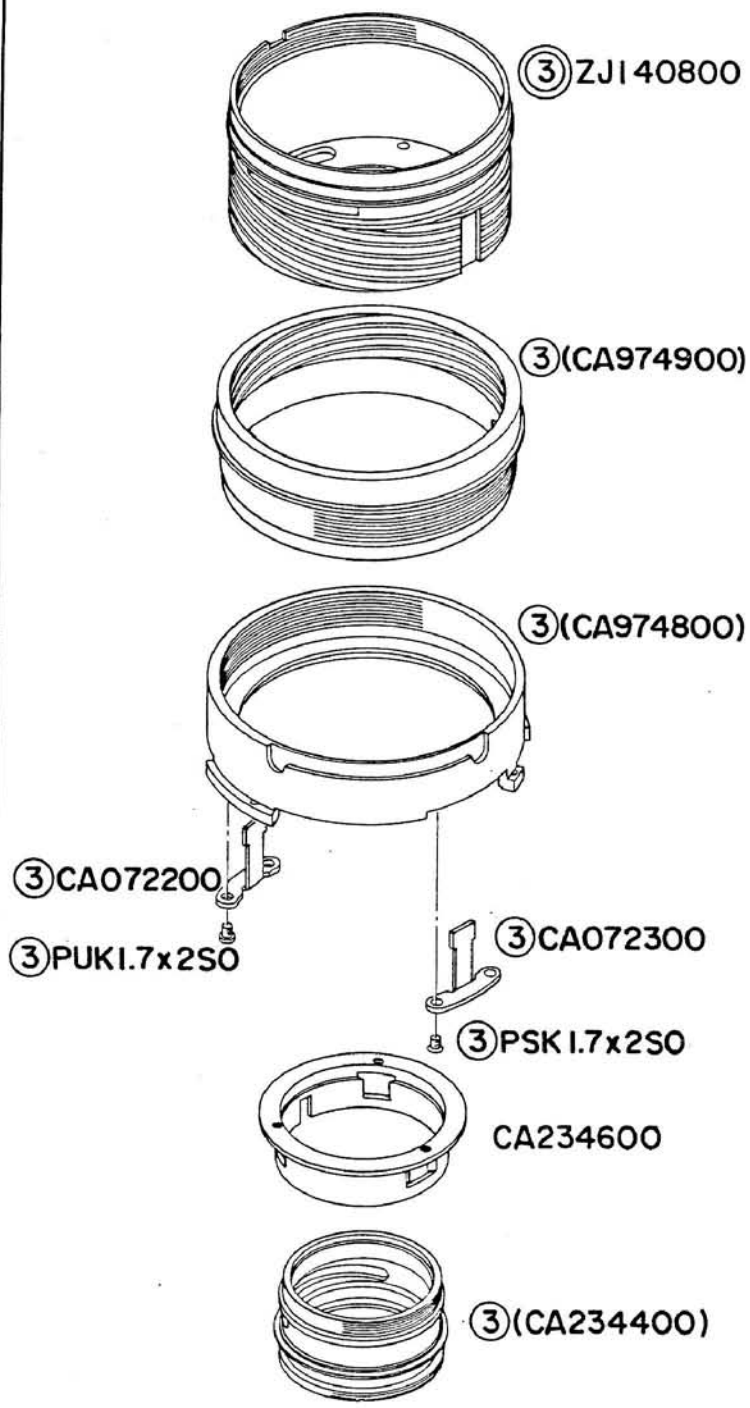
③ZJ140800
③(CA974900)
③(CA974800)
③CA072200
③PUK1.7x2S0
③CA072300
③PSK1.7x2S0
CA234600
③(CA234400)

〈4〉

OLD	NEW
④(CA978000)	CA978000
④(LC062900)	LC062900
④ZJ140700	CA234500
④(LC063000)	LC063000
④(LC063100)	LC063100
④(CA978100)	CA235000
LC063200	CA235100
CA979400 [29ネジ]	LC063200
	CE235200 [29.5ネジ]

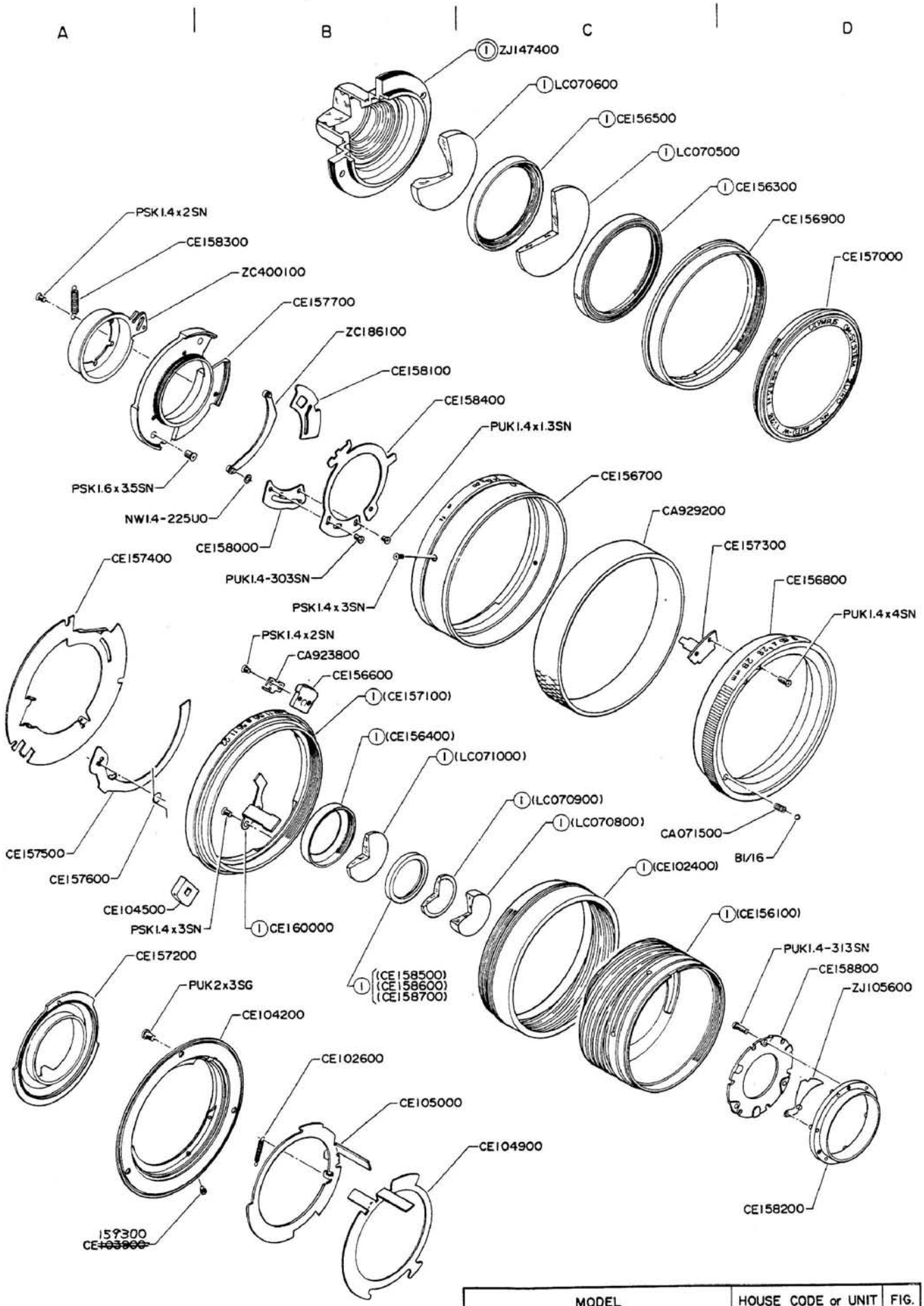

MODEL	HOUSE CODE or UNIT	FIG.
OLYMPUS OM-SYSTEM ZUIKO MC AUTO-W 1:2.8 f=28mm	MW2828	1/1
	OLYMPUS OPTICAL CO., LTD. TOKYO, JAPAN	

1181
~~1280~~

NOTE : WHEN ORDERING FOR SPARE PARTS, PLEASE CLARIFY A MODEL or HOUSE CODE, PARTS NUMBER AND QUANTITY.

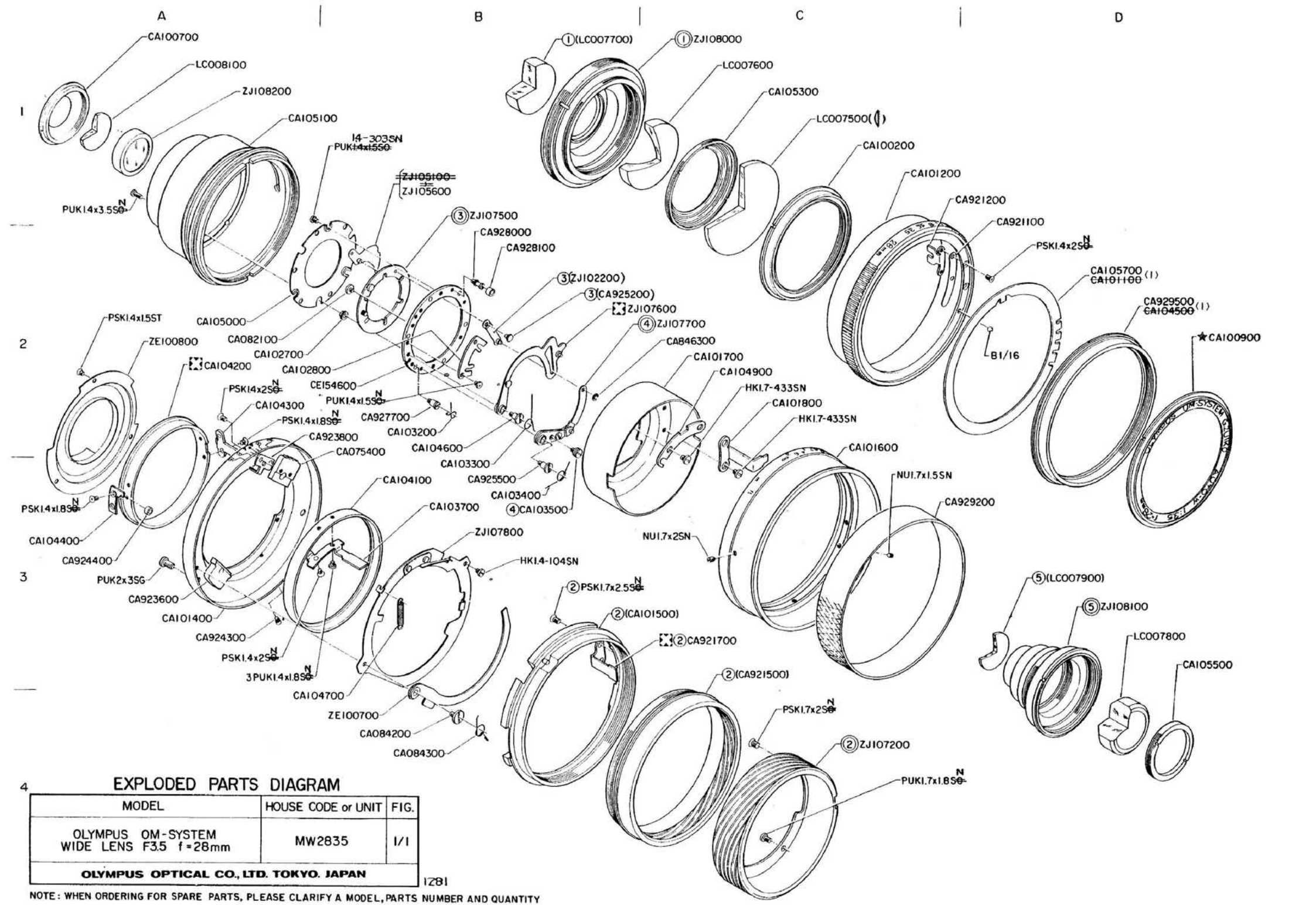

EXPLODED PARTS DIAGRAM

MODEL	HOUSE CODE or UNIT	FIG.
OLYMPUS OM-SYSTEM WIDE LENS F3.5 f=28mm	MW2835	1/1
OLYMPUS OPTICAL CO., LTD. TOKYO. JAPAN		

1281

NOTE: WHEN ORDERING FOR SPARE PARTS, PLEASE CLARIFY A MODEL, PARTS NUMBER AND QUANTITY

MW2835 変更部品表 IMPROVED PARTS TABLE

OLD	(1)	NEW
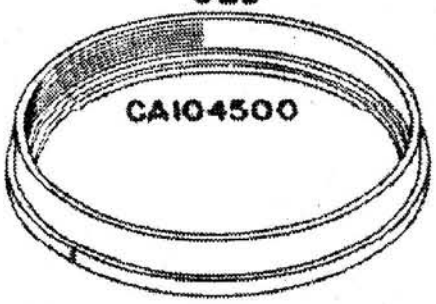 CA104500		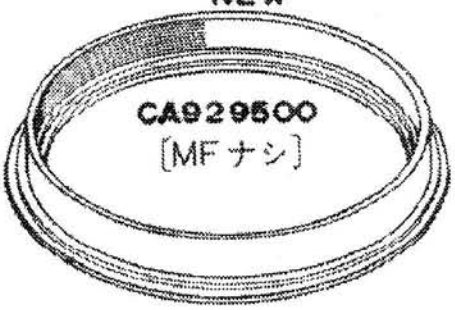 CA929500 [MFナシ]
CA101100		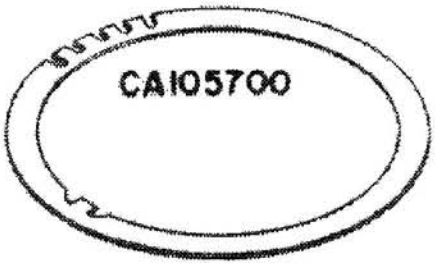 CA105700

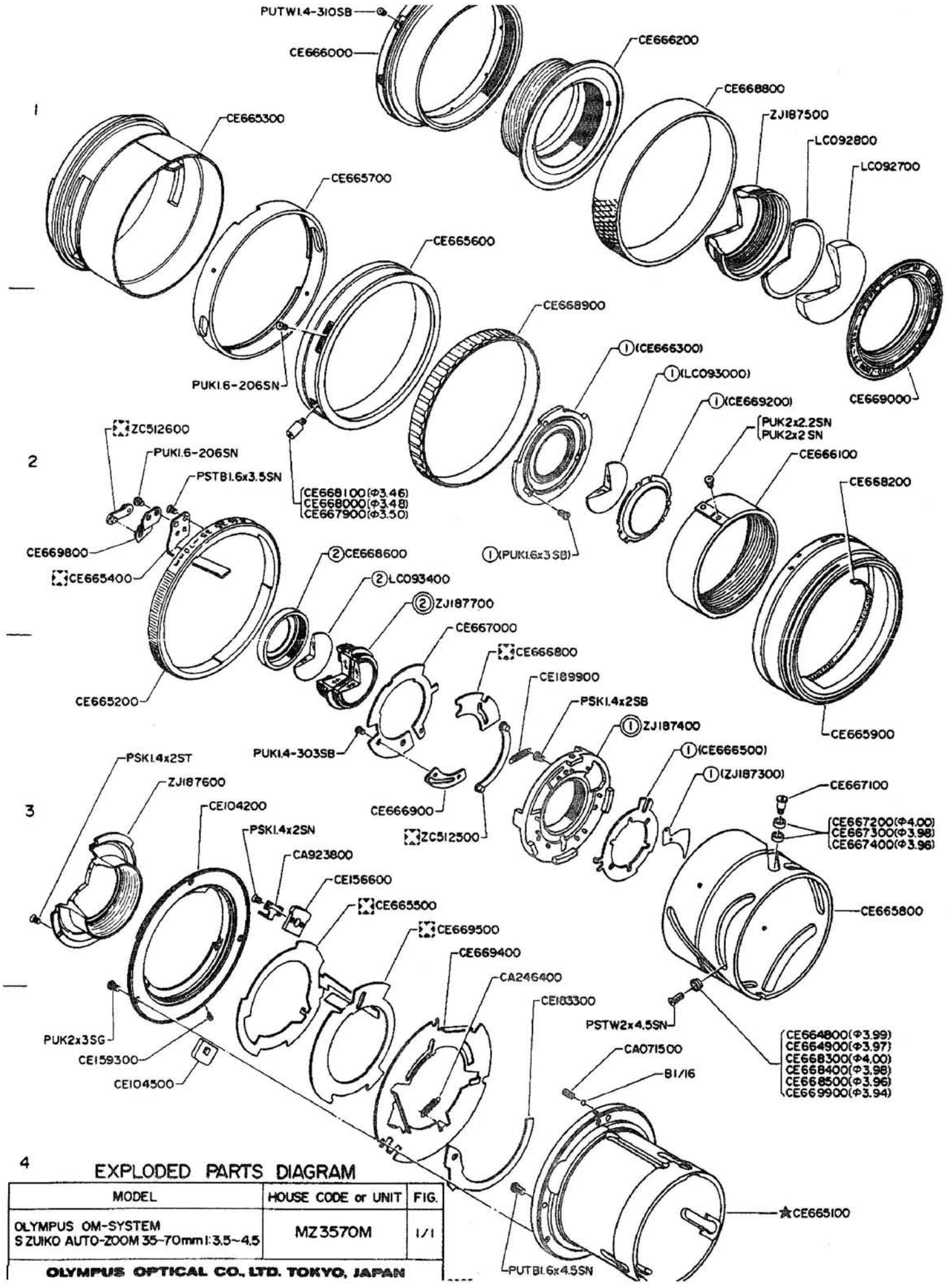

EXPLODED PARTS DIAGRAM

MODEL	HOUSE CODE or UNIT	FIG.
OLYMPUS OM-SYSTEM S ZUIKO AUTO-ZOOM 35~70mm 1:3.5~4.5	MZ3570M	1/1

OLYMPUS OPTICAL CO., LTD. TOKYO, JAPAN

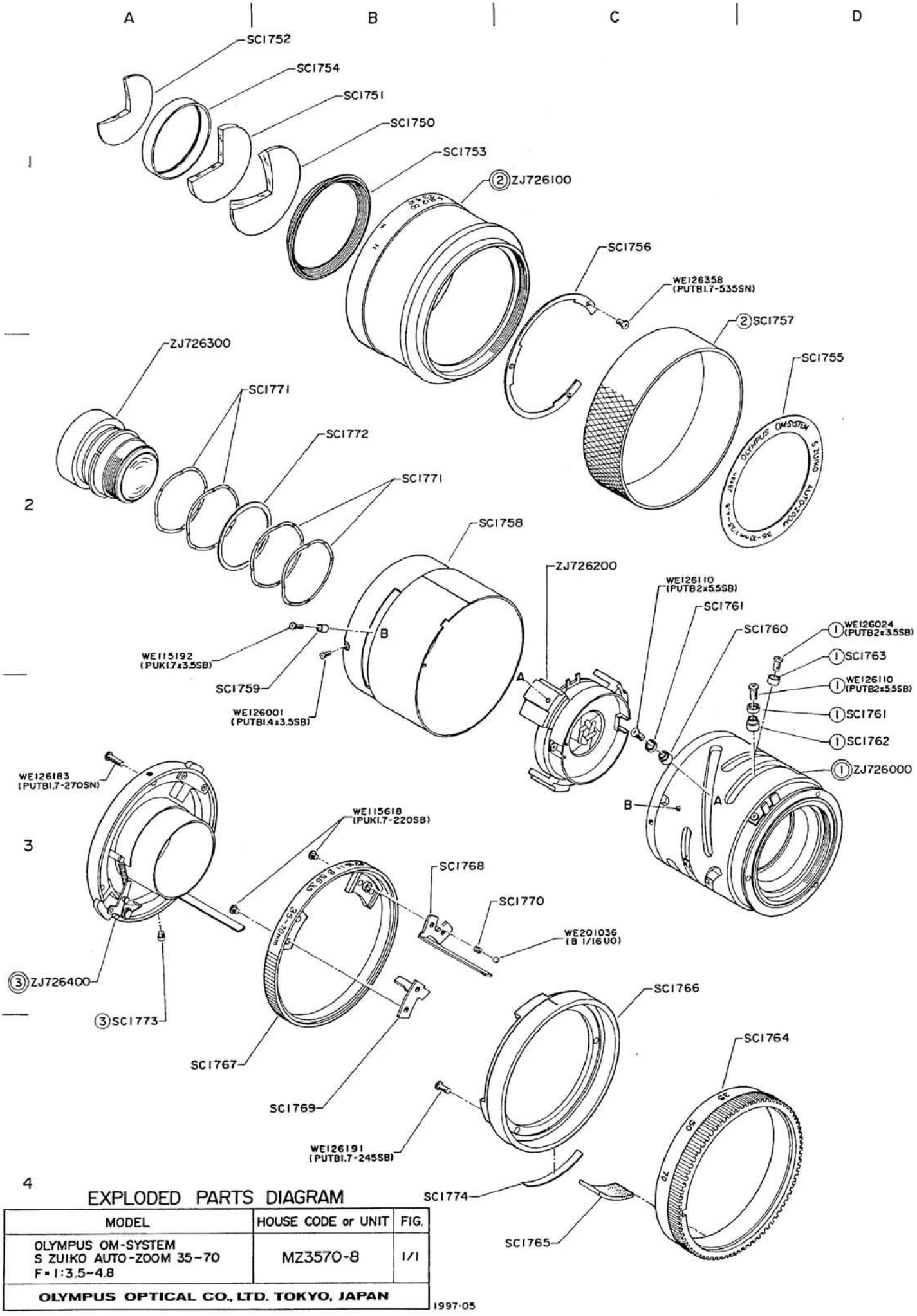

EXPLODED PARTS DIAGRAM

MODEL	HOUSE CODE or UNIT	FIG.
OLYMPUS OM-SYSTEM S ZUIKO AUTO-ZOOM 35~70 F=1:3.5~4.8	MZ3570-8	1/1
OLYMPUS OPTICAL CO., LTD. TOKYO, JAPAN		

1997·05

OLYMPUS
OM-SYSTEM S ZUIKO AUTO-ZOOM 35-70mm

PARTS LIST

MZ 3570-8

PARTS No.	NAME OF PARTS	NOTE
· SC1750	1-O LENS	B-1
· SC1751	2-O LENS	B-1
· SC1752	3-T LENS	B-1
· SC1753	FRONT HOLD RING	B-1
· SC1754	FRONT SPACER	B-1
· SC1755	NAME PLATE	D-2
· SC1756	FOCUS RING STOPPER	C-1
· SC1757	RUBBER RING	D-1
· SC1758	INDICATOR RING	B-2
· SC1759	COLLAR	A-3
· SC1760	ROLLER SHAFT 1	D-2
· SC1761	ROLLER 1	C-2. D-3
· SC1762	ROLLER SHAFT 3	D-3
· SC1763	ROLLER 2	D-2
· SC1764	ZOOM RING	D-4
· SC1765	RUBBER BRAKE	C-4
· SC1766	MOUNT BASE	C-3
· SC1767	DIAPHRAGM RING	A-4
· SC1768	DIAPHRAGM ARM	B-3
· SC1769	CONNECT LEVER	B-4
· SC1770	CLICK SPRING	C-3
· SC1771	WAVE WASHER	B-2
· SC1772	MAIN WASHER	B-2
· SC1773	STOPPER SCREW	A-4
· SC1774	NO.PLATE	B-4
· ZJ726000	HELICOID Assy	D-3
· ZJ726100	FOCUS RING Assy	C-1
· ZJ726200	DIAPHRAGM Assy	C-2
· ZJ726300	REAR LENS Assy	A-2
· ZJ726400	LENS MOUNT Assy	A-3
WE115192	SCREW	
· WE115618	SCREW	
WE126001	SCREW	
WE126191	SCREW	
WE126183	SCREW	
· WE126358	SCREW	
WE126024	SCREW	
WE126110	SCREW	
WE201036	BALL	

PARTS No.	NAME OF PARTS	NOTE

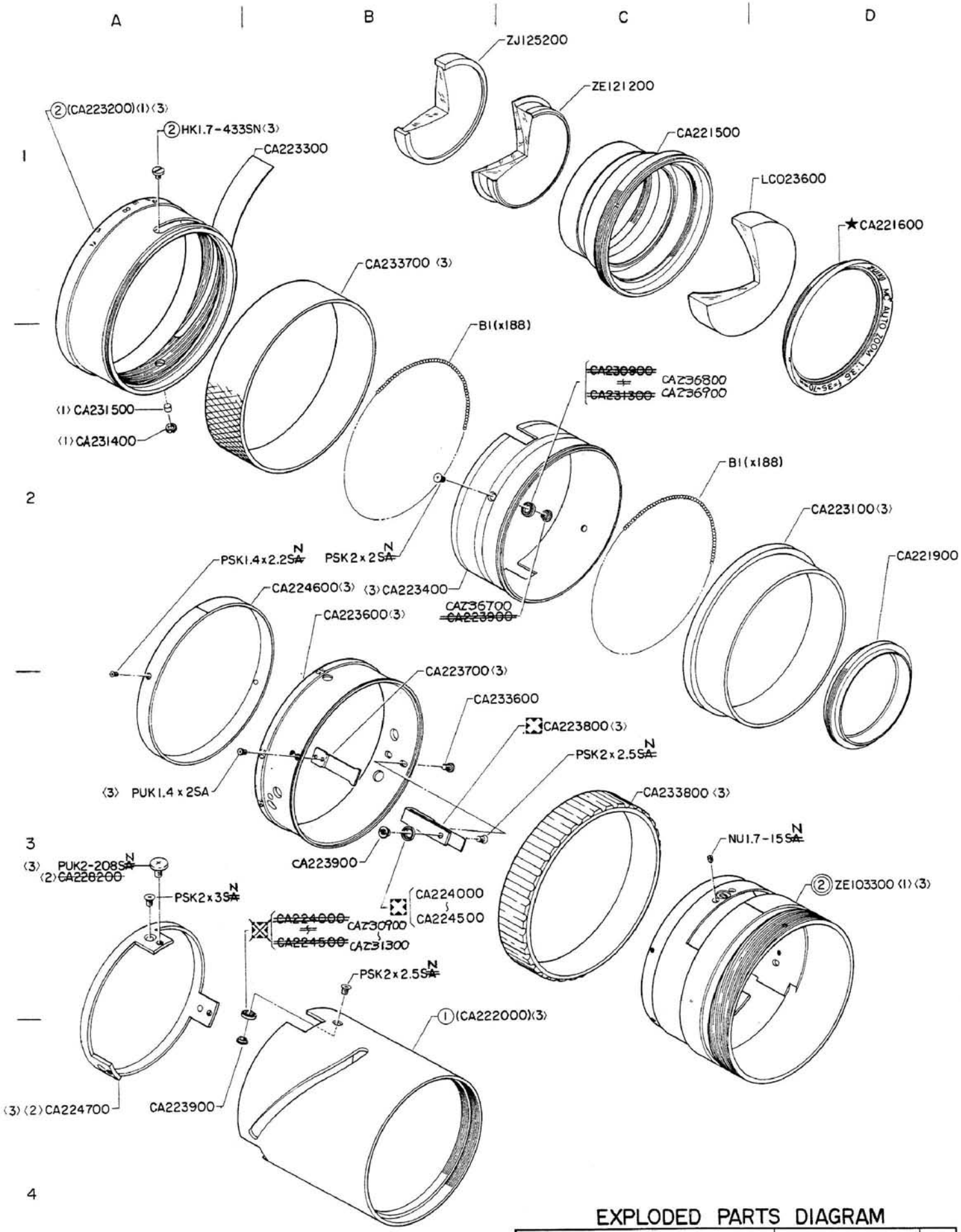

EXPLODED PARTS DIAGRAM

MODEL	HOUSE CODE or UNIT	FIG.
OLYMPUS OM-SYSTEM ZOOM LENS F3.6 f=35-70mm	MZ 3570 TYPE (1)	1/2
OLYMPUS OPTICAL CO., LTD. TOKYO, JAPAN		

1281

NOTE: WHEN ORDERING FOR SPARE PARTS, PLEASE CLARIFY A MODEL, PARTS NUMBER AND QUANTITY.

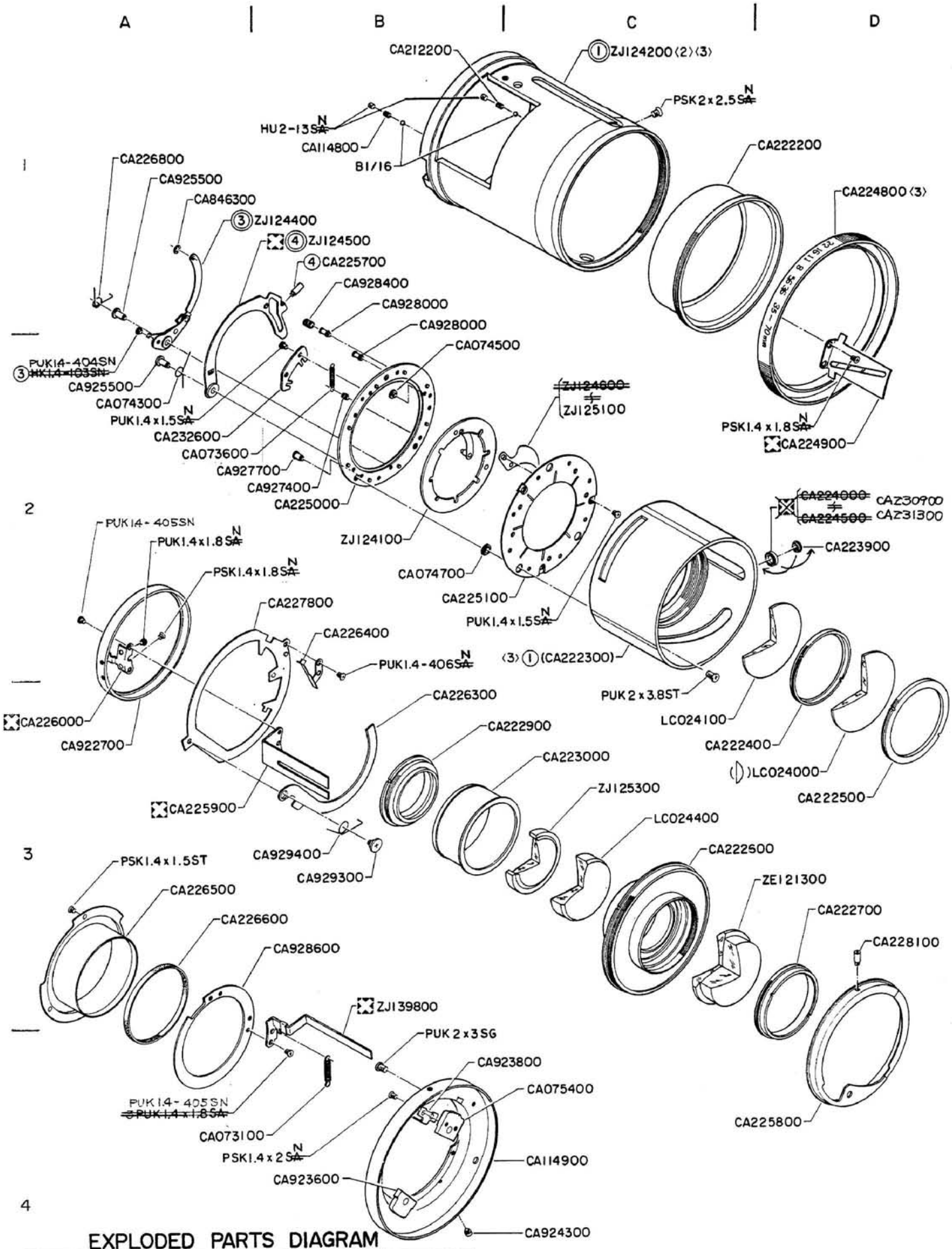

EXPLODED PARTS DIAGRAM

MODEL	HOUSE CODE or UNIT	FIG.
OLYMPUS OM-SYSTEM ZOOM LENS F3.6 f=35~70mm	MZ 3570 TYPE (1)	2/2
OLYMPUS OPTICAL CO., LTD. TOKYO, JAPAN		

0482

NOTE: WHEN ORDERING FOR SPARE PARTS, PLEASE CLARIFY A MODEL, PARTS NUMBER AND QUANTITY.

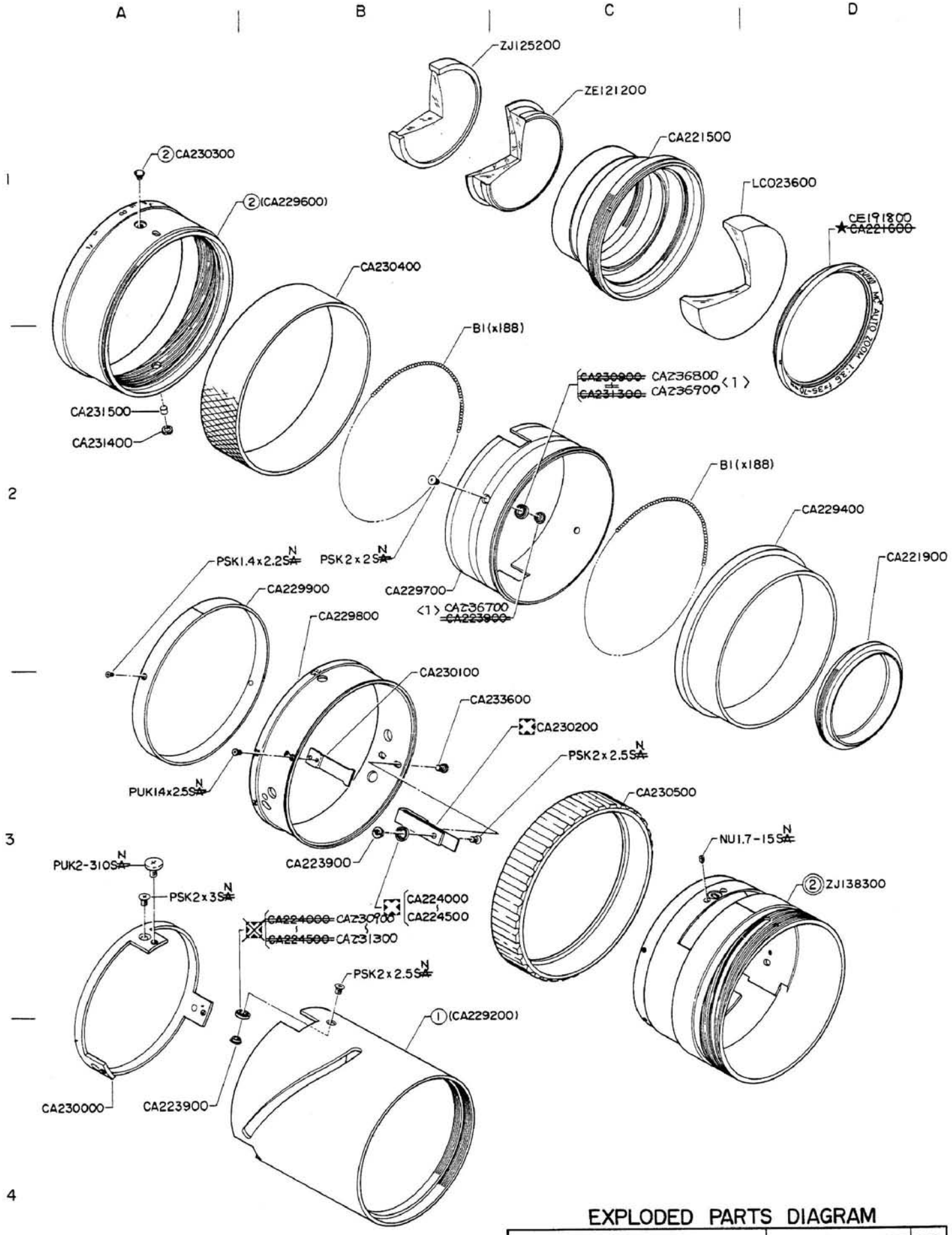

EXPLODED PARTS DIAGRAM

MODEL	HOUSE CODE or UNIT	FIG.
OLYMPUS OM-SYSTEM ZUIKO AUTO ZOOM 35~70mm 1:3.6 ~~ZOOM LENS F3.6 f=35-70mm~~	MZ 3570 (TYPE-2)	1/2
OLYMPUS OPTICAL CO., LTD. TOKYO, JAPAN		

1281

NOTE : WHEN ORDERING FOR SPARE PARTS, PLEASE CLARIFY A MODEL, PARTS NUMBER AND QUANTITY.

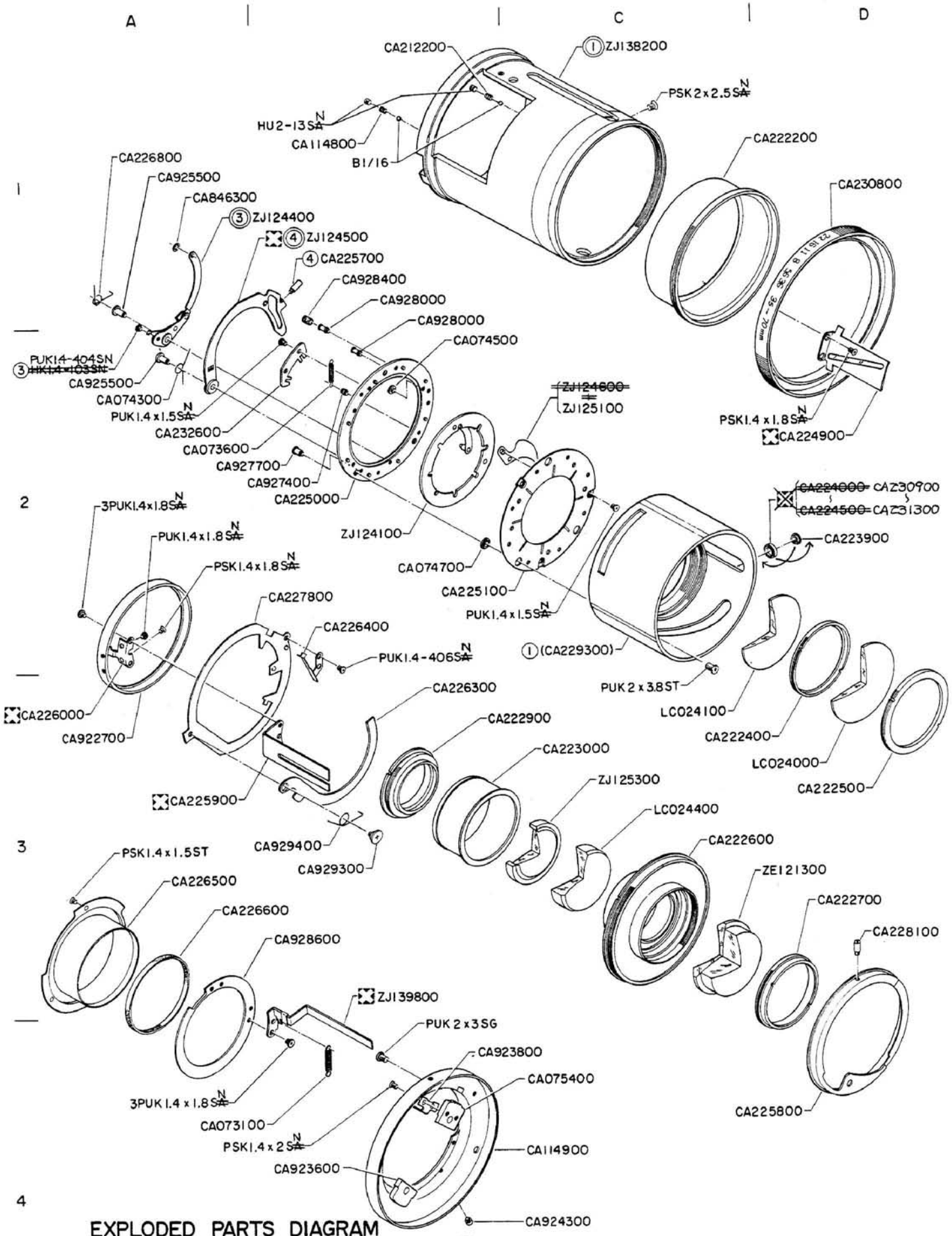

EXPLODED PARTS DIAGRAM

MODEL	HOUSE CODE or UNIT	FIG.
OLYMPUS OM-SYSTEM ZUIKO AUTO ZOOM 35~75mm 1:3.6 ~~ZOOM LENS F3.6 f=35-70mm~~	MZ 3570 (TYPE-2)	2/2
OLYMPUS OPTICAL CO., LTD. TOKYO, JAPAN		

1281

NOTE: WHEN ORDERING FOR SPARE PARTS, PLEASE CLARIFY A MODEL, PARTS NUMBER AND QUANTITY.

MZ3570 変更部品表 IMPROVED PARTS TABLE

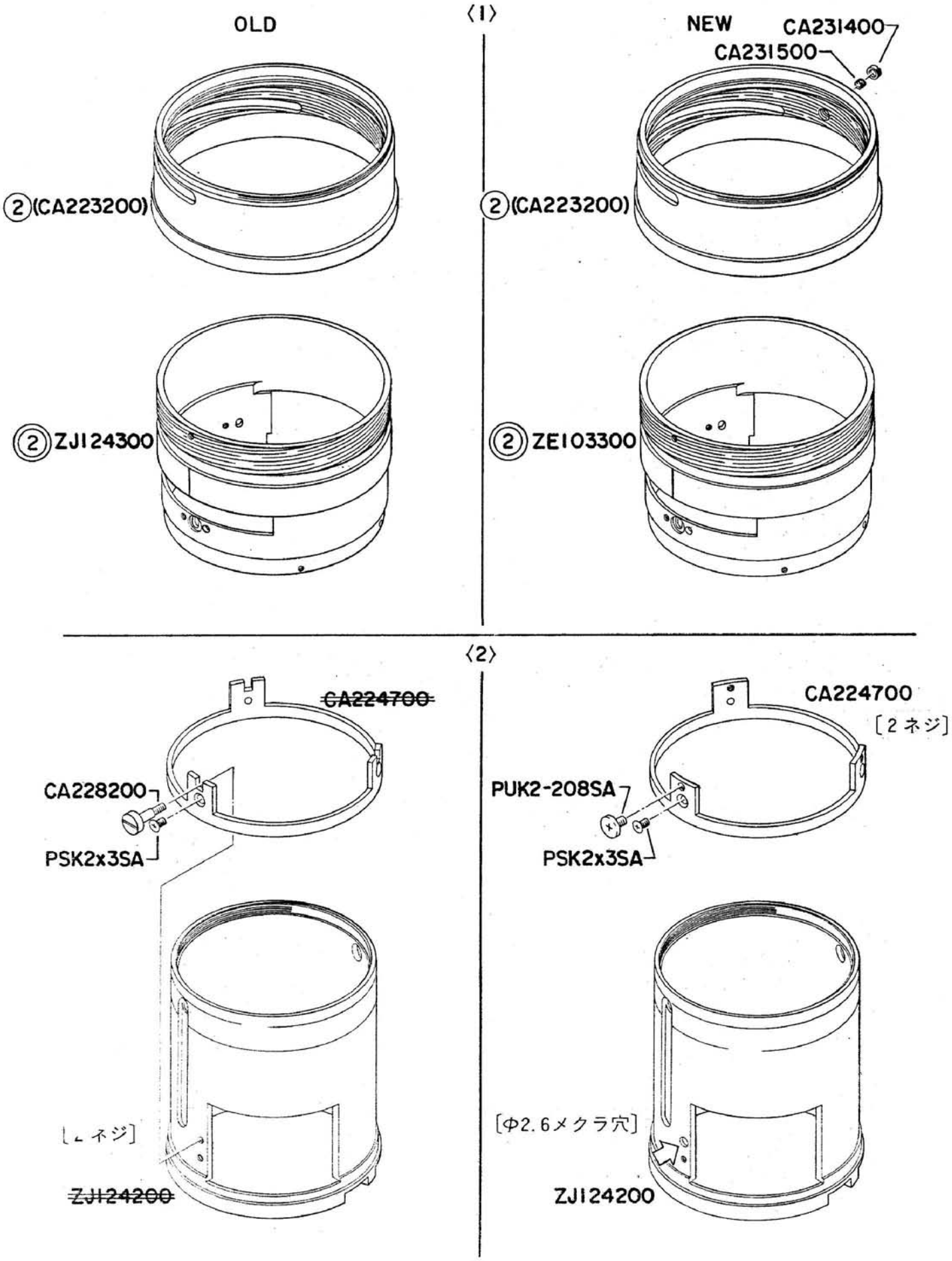

変更部品表 IMPROVED PARTS TABLE

〈3〉

TYPE-1

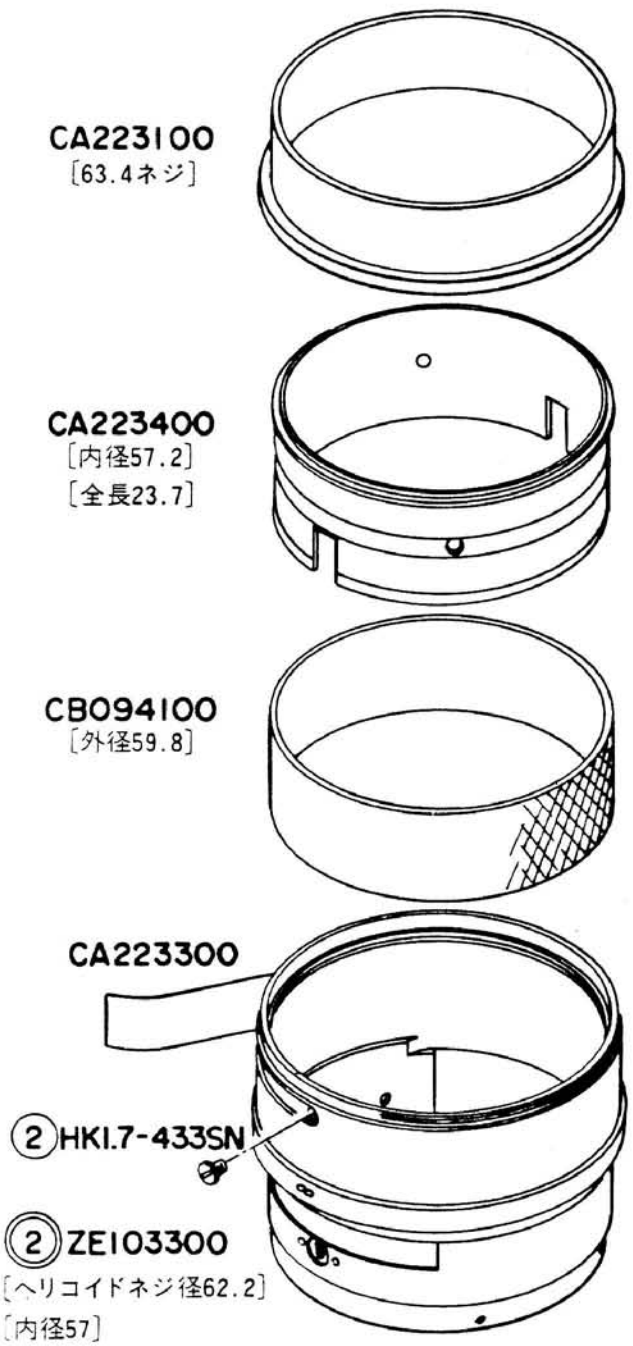

TYPE-2

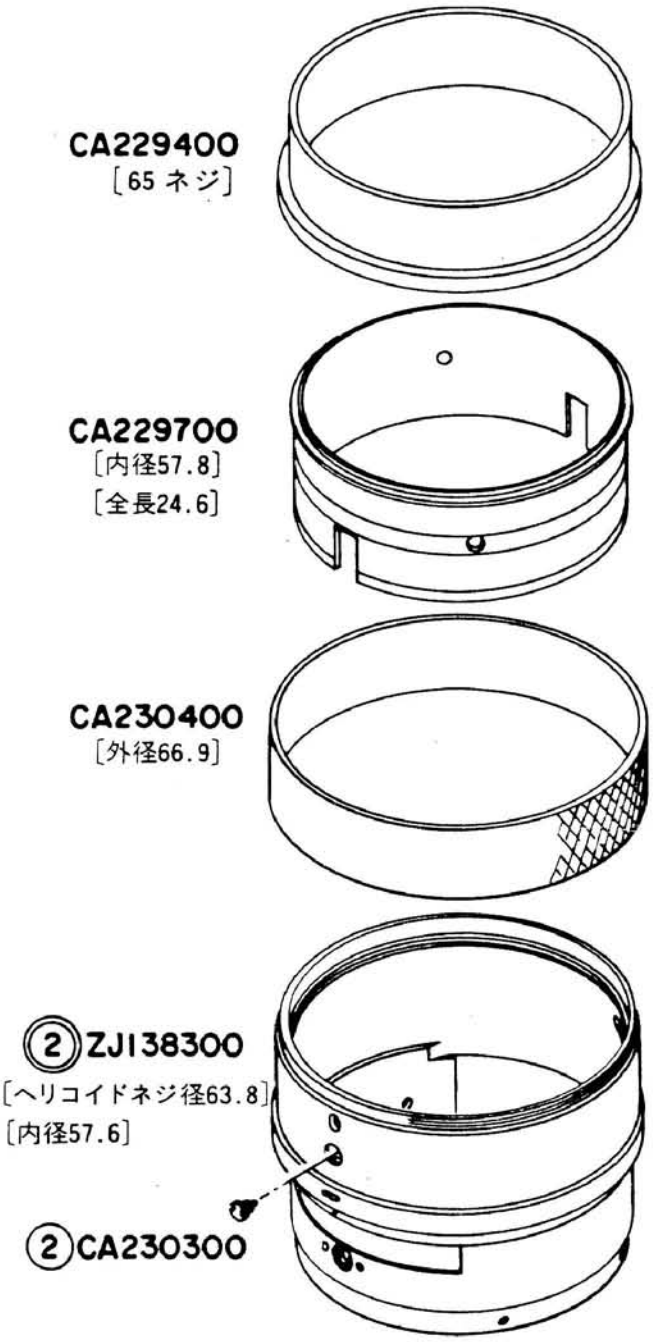

〈3〉

TYPE-1

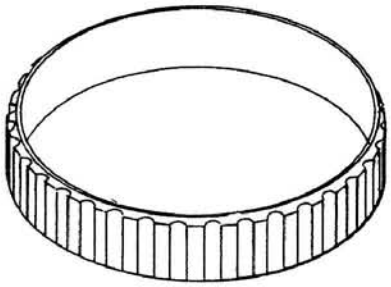

CA233800
[外径62.2]

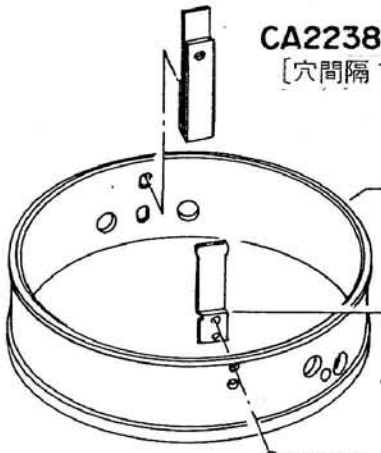

CA223800
[穴間隔 7]

CA223600
[内径60.2]

CA223700
[穴間隔 3.8]
[t 0.8]

PUK1.4x2SA

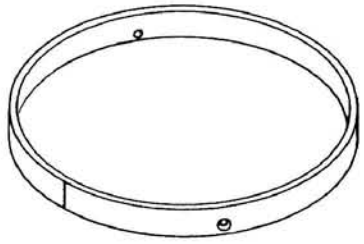

CA224600
[外径61.7]

TYPE-2

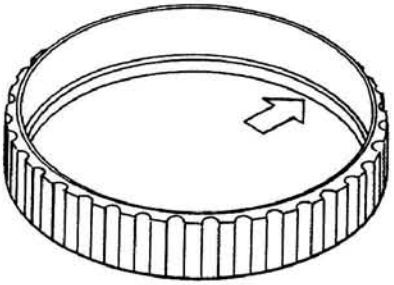

CA230500
[外径66.6]

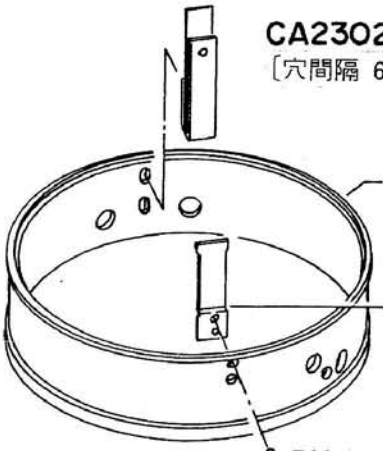

CA230200
[穴間隔 6.7]

CA229800
[内径61]

CA230100
[穴間隔 2.9]
[t 0.6]

PUK1.4x2.5SA

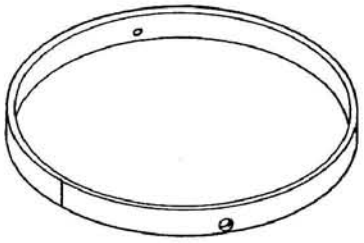

CA229900
[外径62.7]

〈3〉

TYPE-1

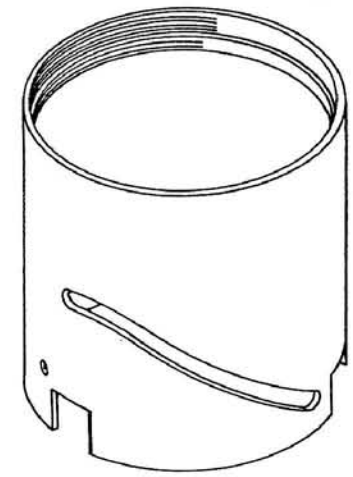

(1)(CA222000)
[外径56.7]
[全長60.3]

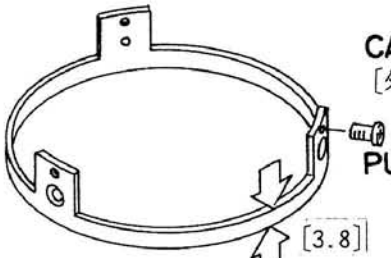

CA224700
[外径57.6]
PUK2-208SA
[3.8]

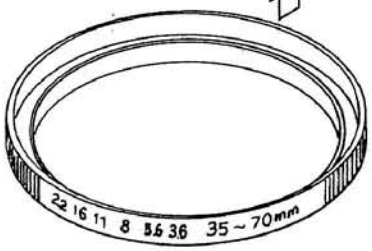

CA224800
[外径63.8]

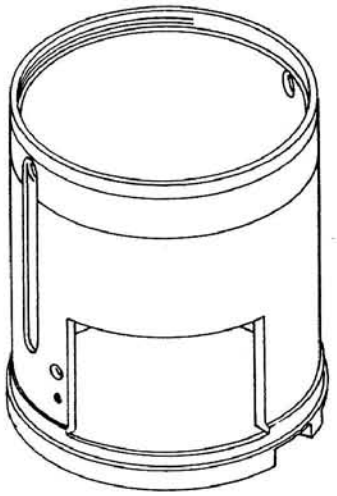

(1)ZJ124200

(1)(CA222300)

TYPE-2

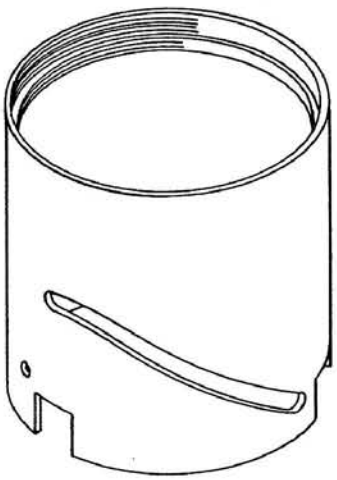

(1)(CA229200)
[外径57.2]
[全長61]

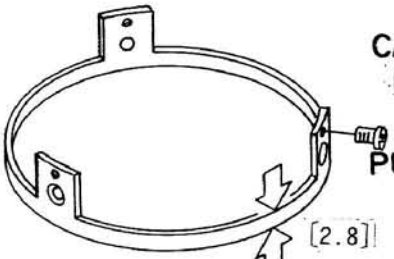

CA230000
[外径57]
PUK2-310SA
[2.8]

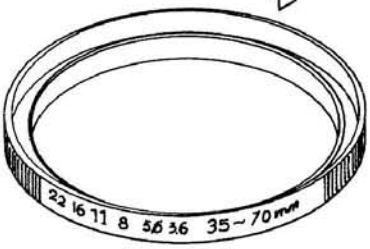

CA230800
[外径65]

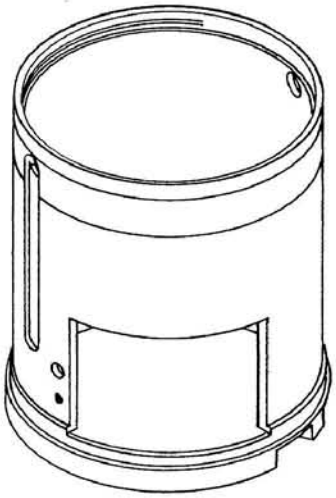

(1)ZJ138200

(1)(CA229300)

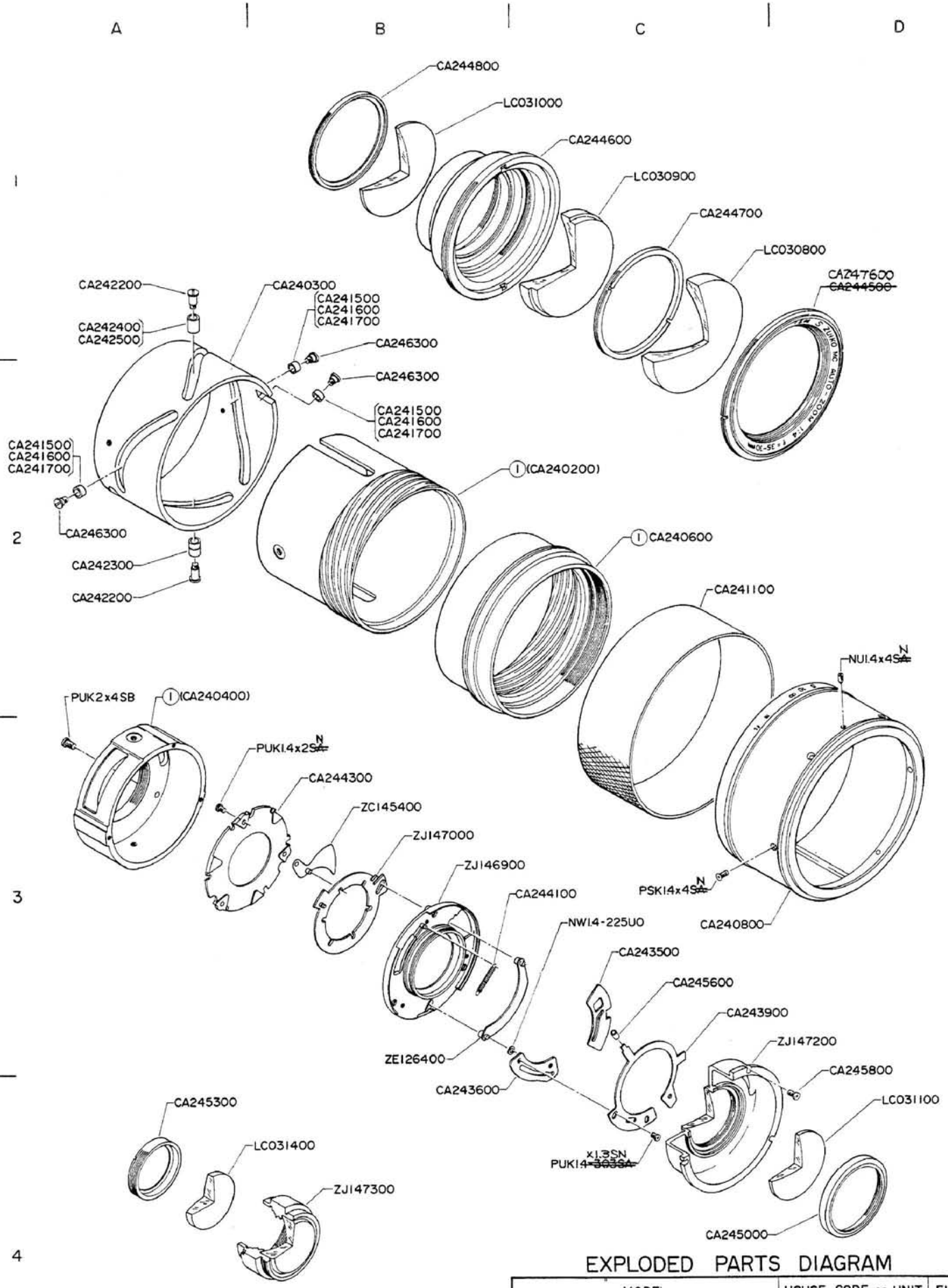

EXPLODED PARTS DIAGRAM

MODEL	HOUSE CODE or UNIT	FIG.
OLYMPUS OM-SYSTEM S ZUIKO ~~MG~~ AUTO-ZOOM 35~70mm 1:4 ~~F4 f=35-70mm~~	MZ3570S	1/2
OLYMPUS OPTICAL CO., LTD. TOKYO, JAPAN		

1821
~~1280~~

NOTE : WHEN ORDERING FOR SPARE PARTS, PLEASE CLARIFY A MODEL or HOUSE CODE, PARTS NUMBER AND QUANTITY.

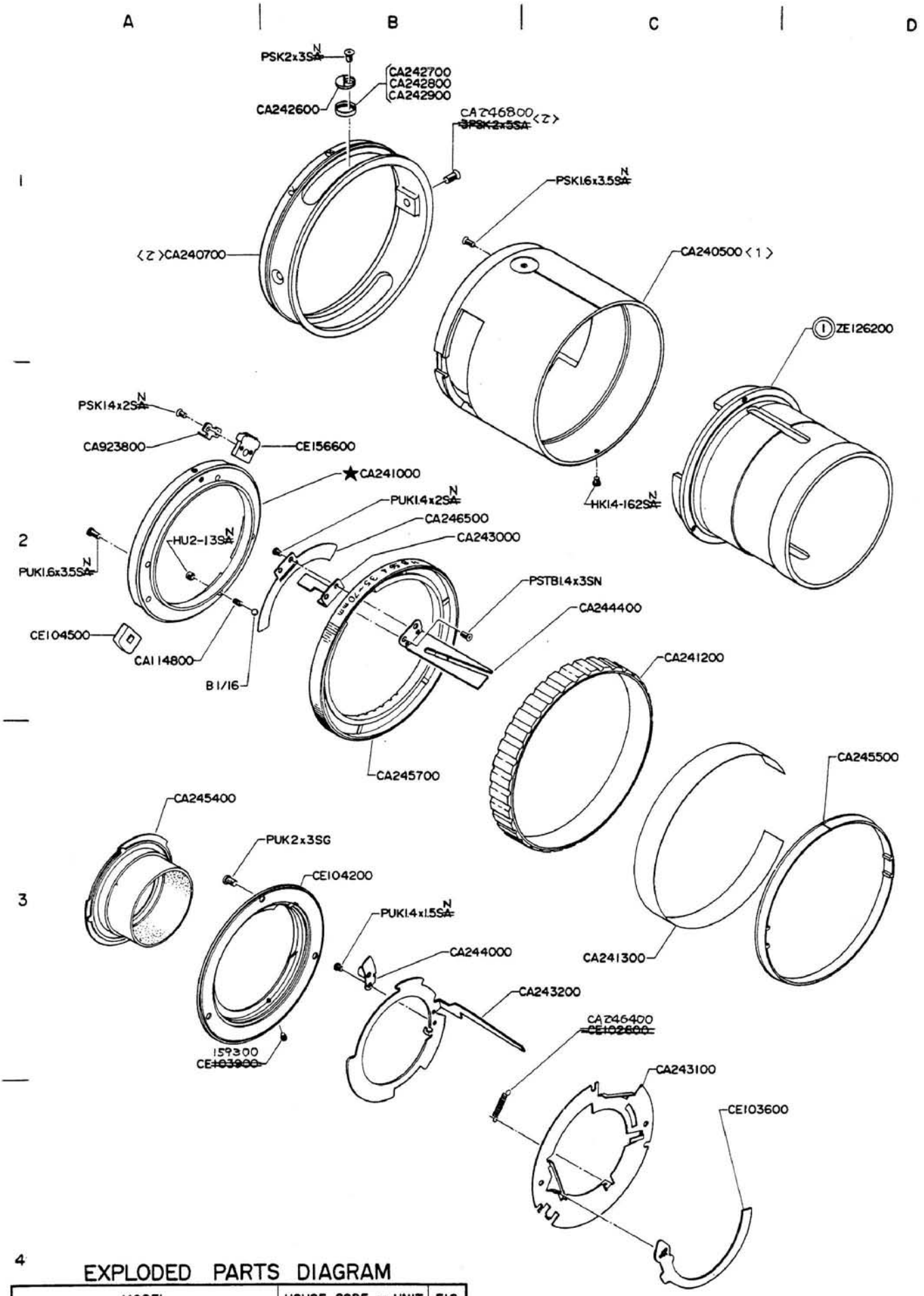

EXPLODED PARTS DIAGRAM

MODEL	HOUSE CODE or UNIT	FIG.
OLYMPUS OM-SYSTEM S ZUIKO ~~MG~~ AUTO-ZOOM 35~70mm 1:4 ~~F4 1:35-70mm~~	MZ3570S	2/2
OLYMPUS OPTICAL CO., LTD. TOKYO, JAPAN		

1281 ~~0681 1280~~

NOTE : WHEN ORDERING FOR SPARE PARTS, PLEASE CLARIFY A MODEL or HOUSE CODE, PARTS NUMBER AND QUANTITY.

MZ3570S

変更部品表 IMPROVED PARTS TABLE

〈1〉

OLD

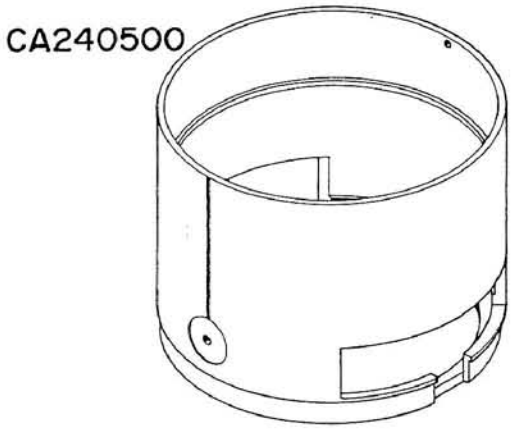

NEW

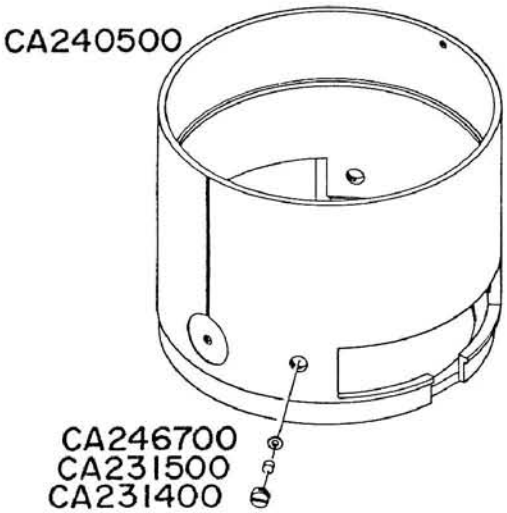

〈2〉

OLD

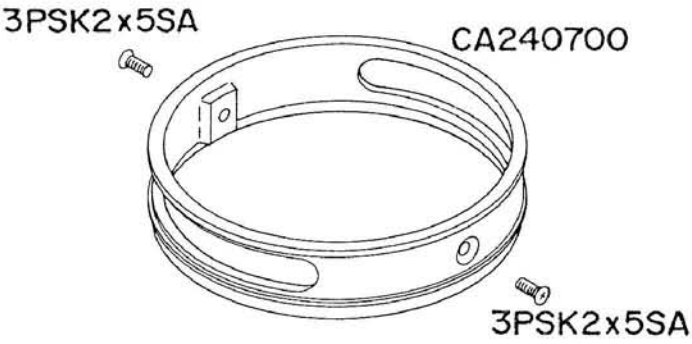

NEW

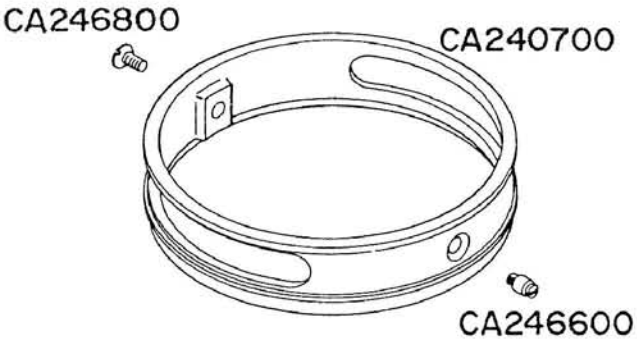

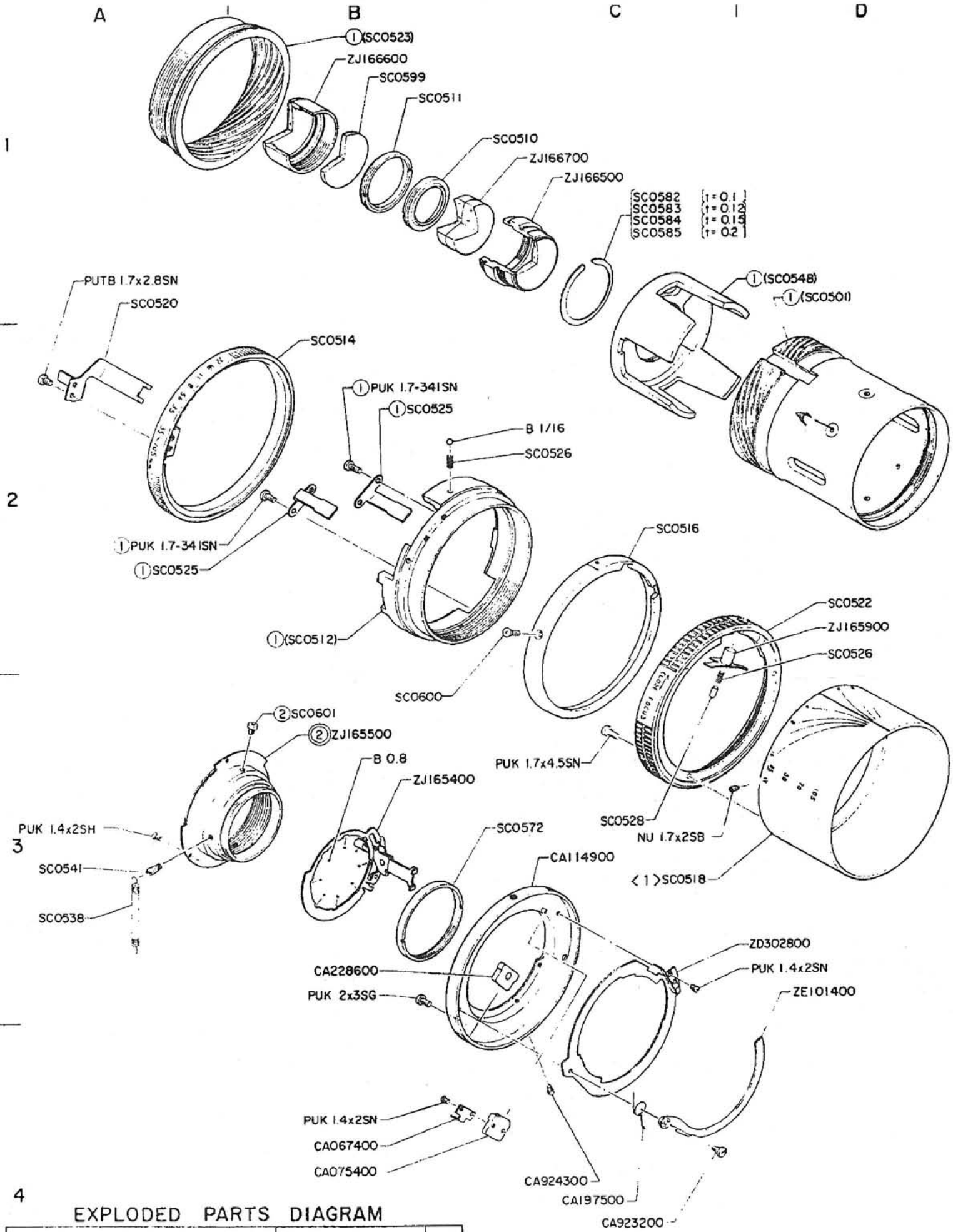

EXPLODED PARTS DIAGRAM

MODEL	HOUSE CODE or UNIT	FIG.
OLYMPUS OM-SYSTEM ZUIKO AUTO-ZOOM f=35~105mm F=1:4.5~3.5	MZ3510K	1/2
OLYMPUS OPTICAL CO., LTD. TOKYO, JAPAN		0783 ~~1082~~

NOTE : WHEN ORDERING FOR SPARE PARTS, PLEASE CLARIFY A MODEL or HOUSE CODE, PARTS NUMBER AND QUANTITY.

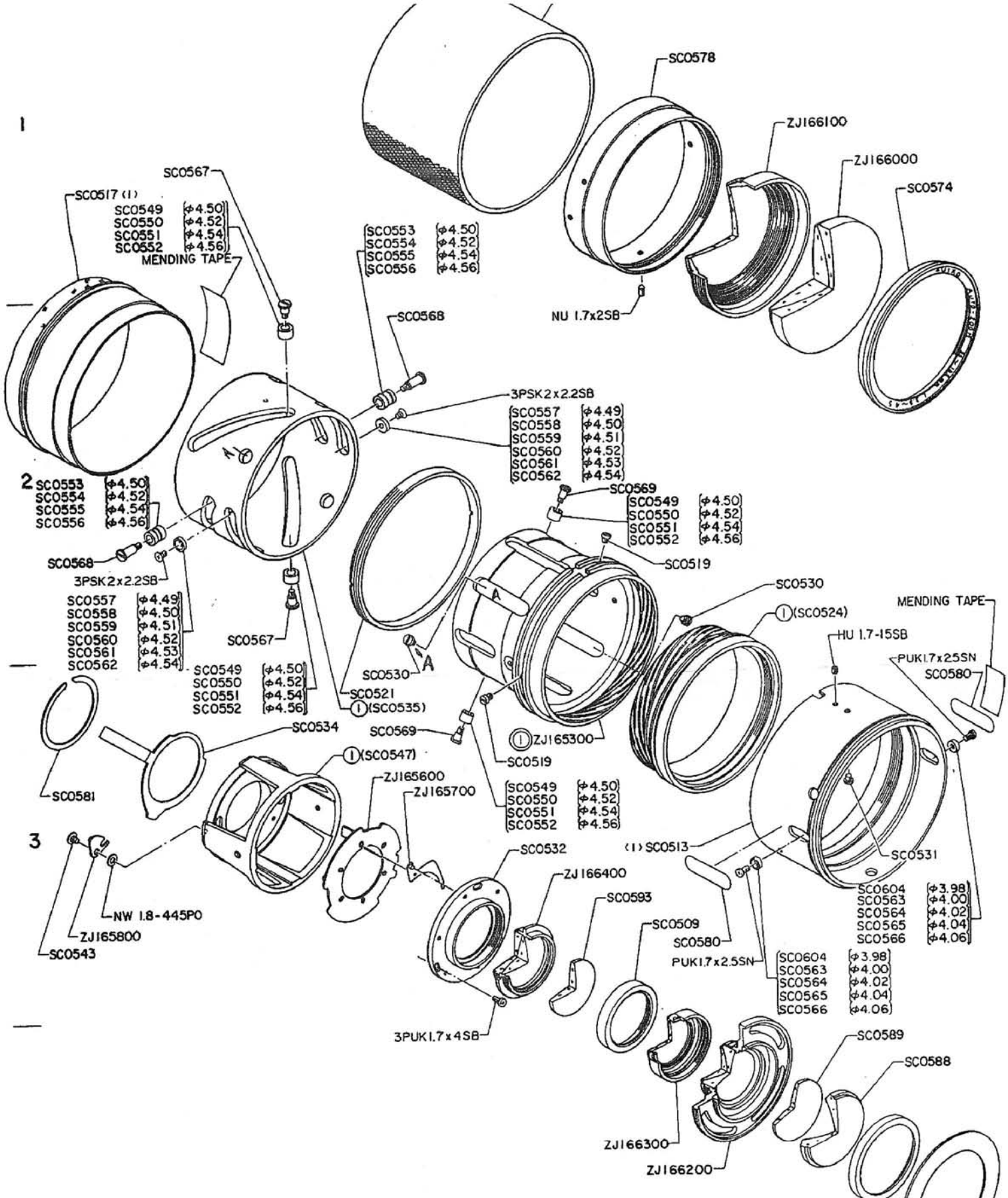

4

EXPLODED PARTS DIAGRAM

MODEL	HOUSE CODE or UNIT	FIG.
OLYMPUS OM-SYSTEM ZUIKO AUTO-ZOOM f=35~105mm F=1:3.5~4.5	MZ3510K TYPE 1	2/2
OLYMPUS OPTICAL CO., LTD. TOKYO, JAPAN		

0891

NOTE: WHEN ORDERING FOR SPARE PARTS, PLEASE CLARIFY A MODEL or HOUSE CODE, PARTS NUMBER AND QUANTITY.

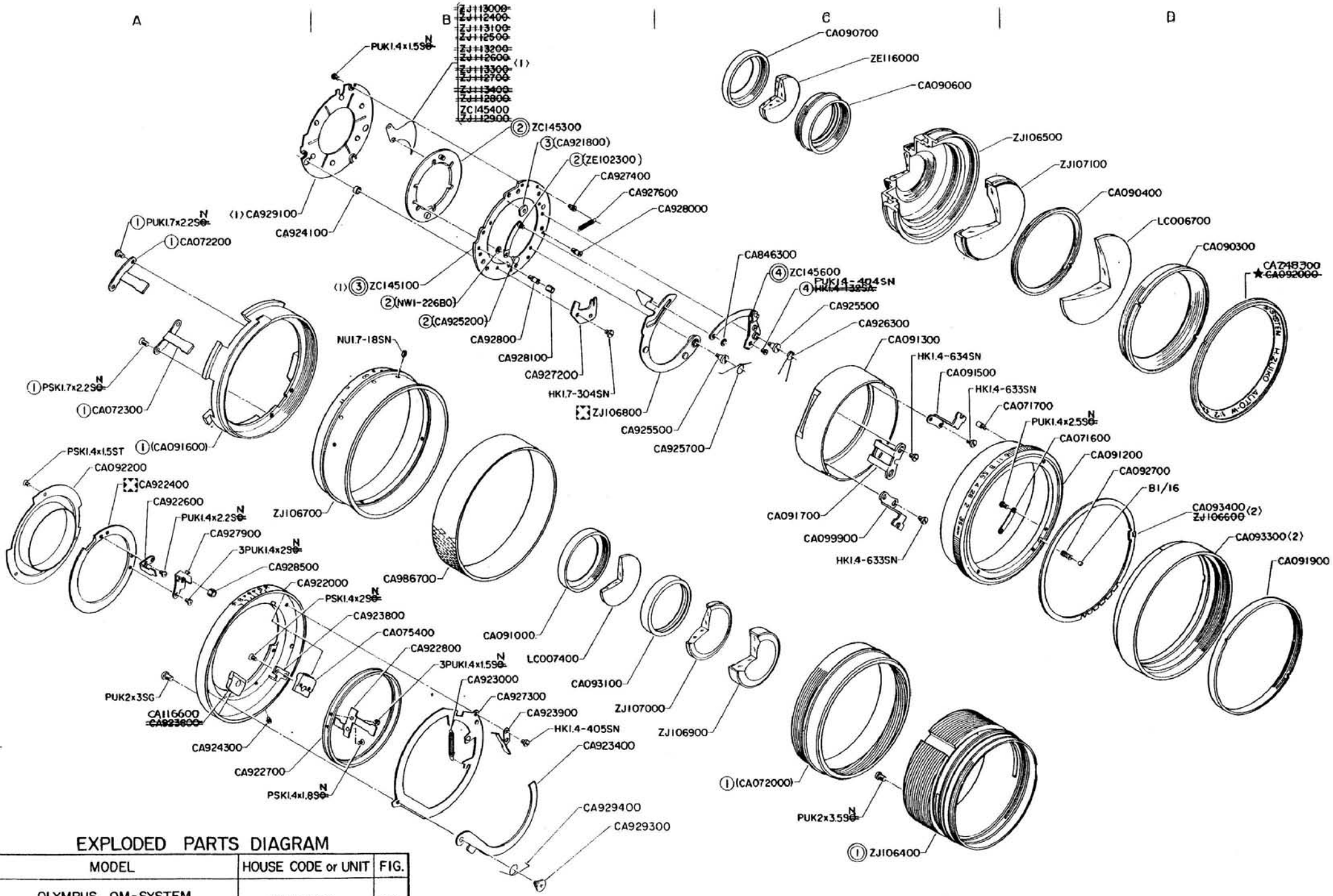

EXPLODED PARTS DIAGRAM

MODEL	HOUSE CODE or UNIT	FIG.
OLYMPUS OM-SYSTEM ~~WIDE LENS F2 f=35mm~~ ZUIKO AUTO-W 35mm 1:2	MW-3520	1/1
OLYMPUS OPTICAL CO.,LTD. TOKYO, JAPAN		

1281

NOTE: WHEN ORDERING FOR SPARE PARTS, PLEASE CLARIFY A MODEL, PARTS NUMBER AND QUANTITY

〈1〉

OLD

~~CA924500~~

〔Φ1.0〕

ZJ112400
ZJ112500
ZJ112600
ZJ112700
ZJ112800
ZJ112900
〔Φ1.0〕

CA115500

~~CA924700~~

NEW

ZC145100

〔Φ1.4〕

ZJ113000
ZJ113100
ZJ113200
ZJ113300
ZJ113400
ZC115400
〔Φ1.4〕

CA929100

〈2〉

OLD

CA092100
〔Φ52.6〕

ZJ106600

NEW

CA093300
〔Φ53.9 MF ナシ〕

CA093400

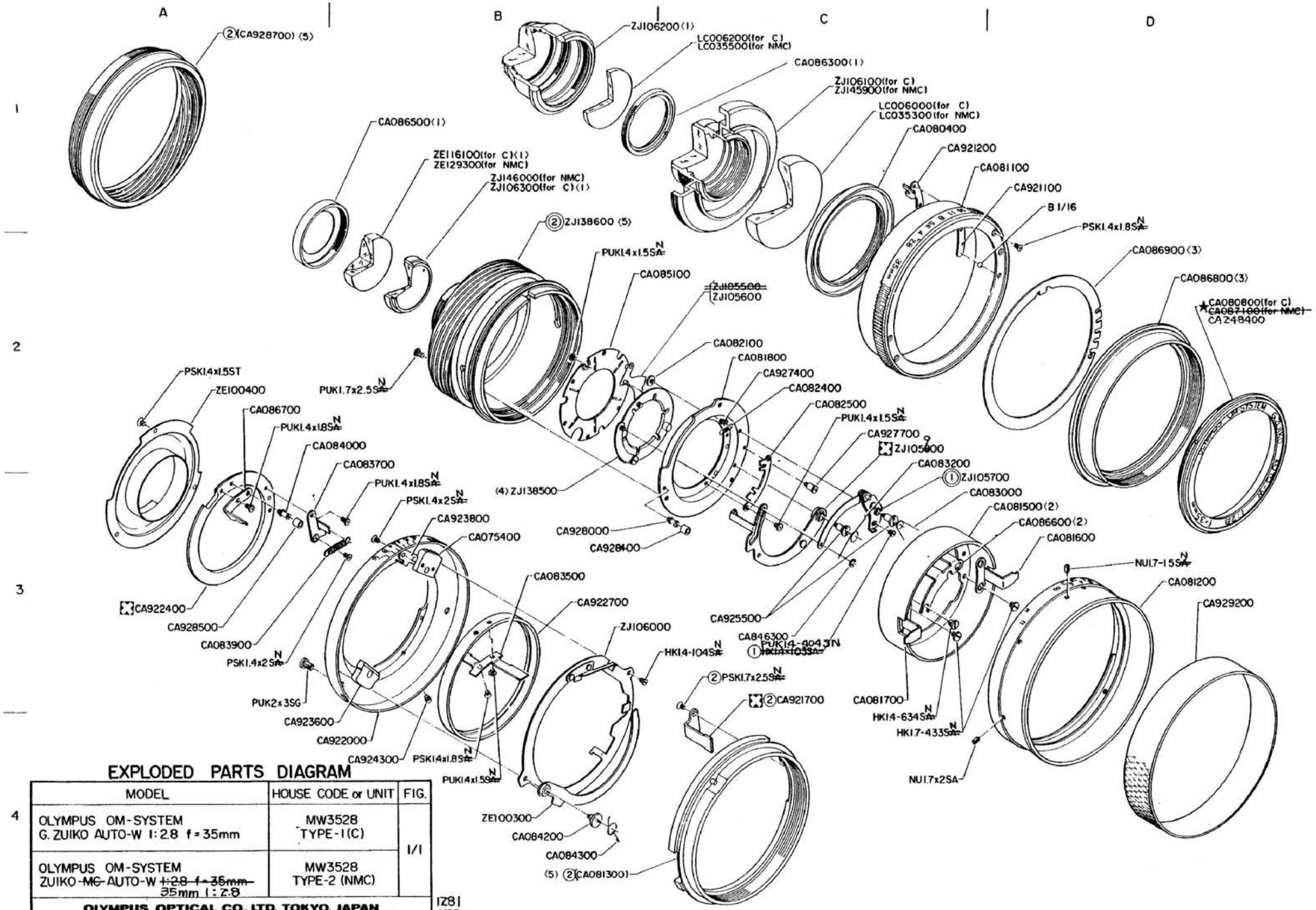

EXPLODED PARTS DIAGRAM

MODEL	HOUSE CODE or UNIT	FIG.
OLYMPUS OM-SYSTEM G. ZUIKO AUTO-W 1:2.8 f=35mm	MW3528 TYPE-1(C)	1/1
OLYMPUS OM-SYSTEM ZUIKO ~~MC~~ AUTO-W ~~1:2.8 f=35mm~~ 35mm 1:2.8	MW3528 TYPE-2 (NMC)	
OLYMPUS OPTICAL CO., LTD. TOKYO, JAPAN		

1281
~~1180~~

NOTE: WHEN ORDERING FOR SPARE PARTS, PLEASE CLARIFY A MODEL, PARTS NUMBER AND QUANTITY

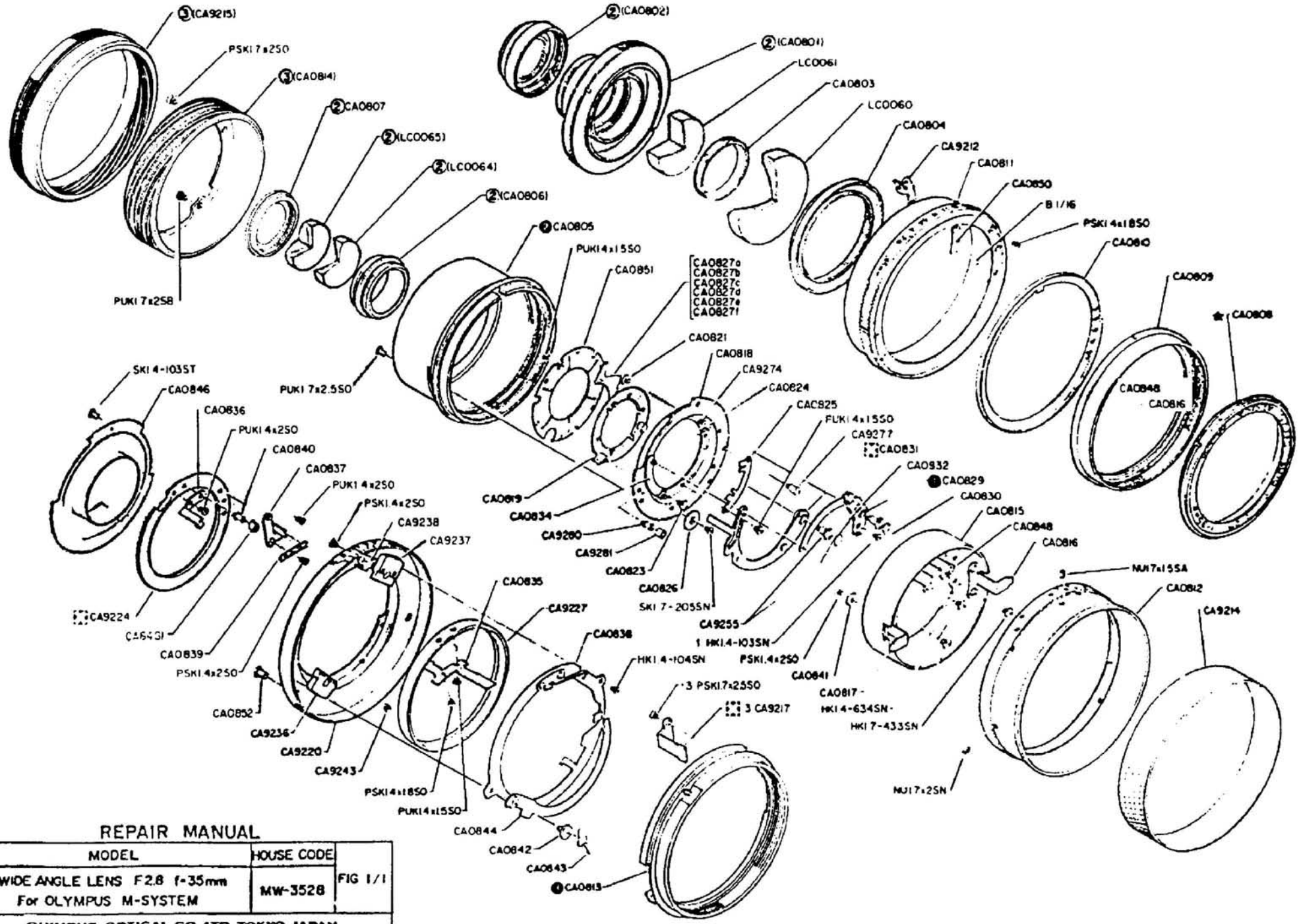

REPAIR MANUAL

MODEL	HOUSE CODE	FIG 1/1
WIDE ANGLE LENS F2.8 f=35mm For OLYMPUS M-SYSTEM	MW-3528	
OLYMPUS OPTICAL CO., LTD. TOKYO, JAPAN		

NOTE: WHEN ORDERING FOR SPARE PARTS, PLEASE CLARIFY A MODEL, PARTS NUMBER AND QUANTITY

MW3528
(TYPE-1·2)

変更部品表 IMPROVED PARTS TABLE

〈1〉

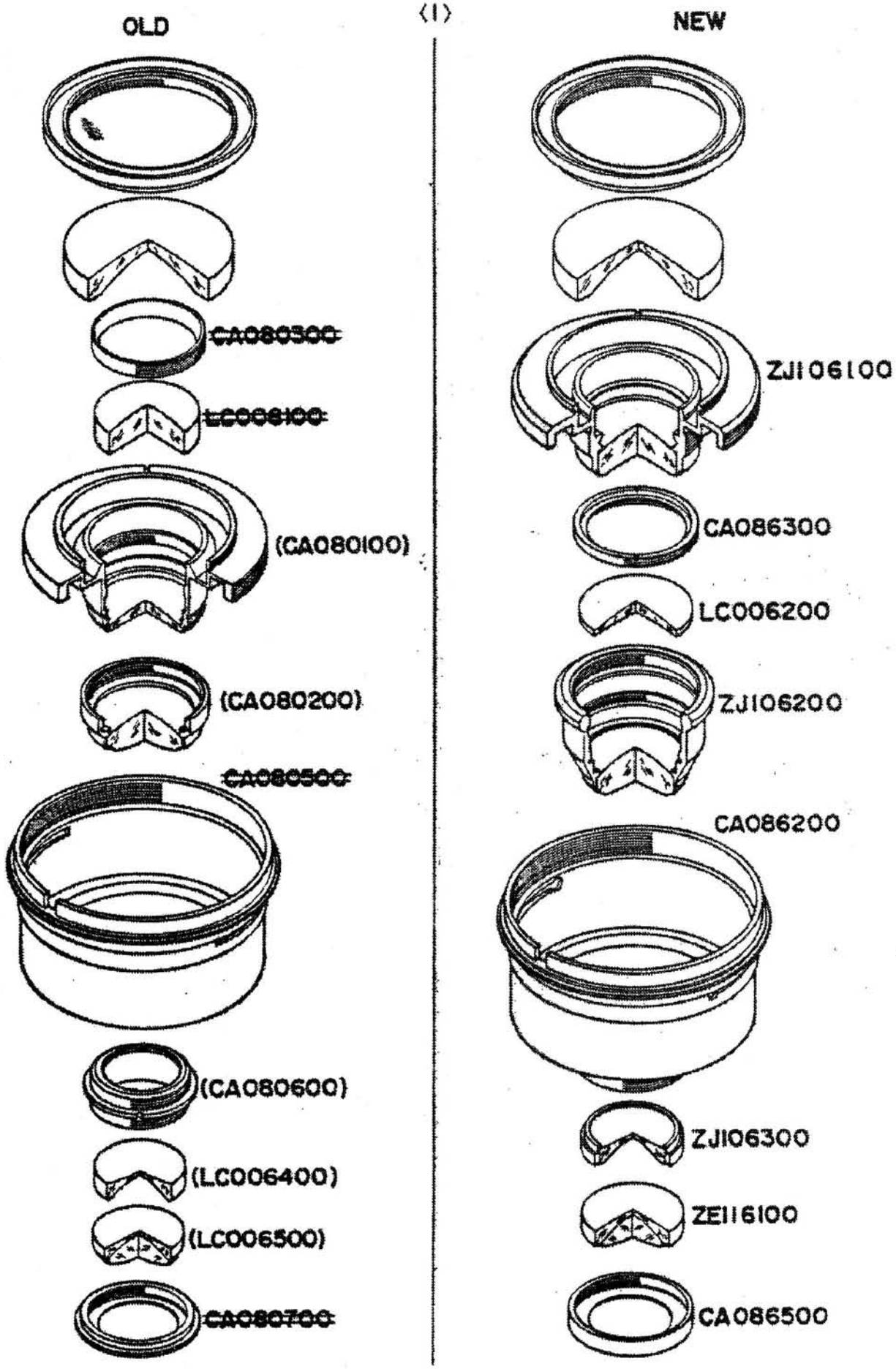

MW3528
(TYPE-1·2) 変更部品表

IMPROVED PARTS TABLE

〈2〉

OLD

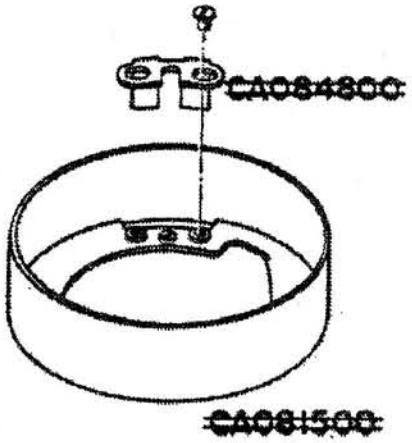

NEW

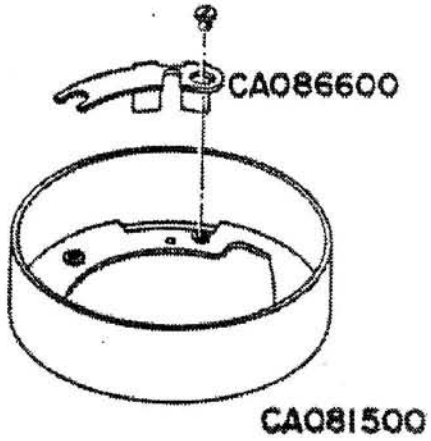

〈3〉

OLD

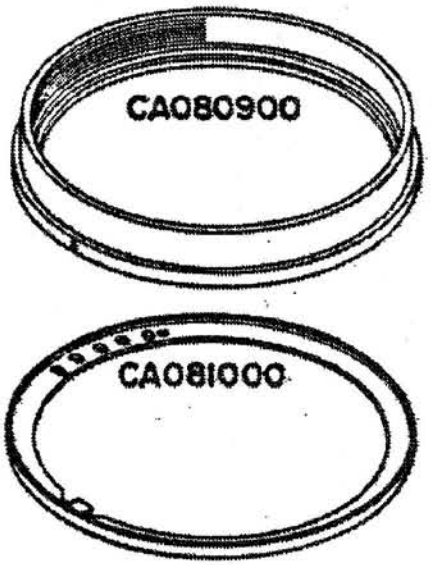

NEW

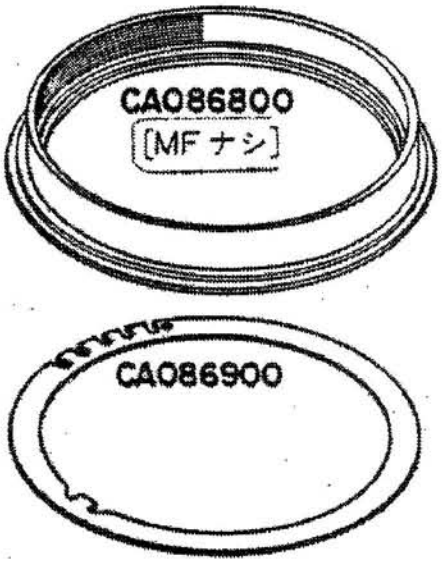

〈4〉

OLD

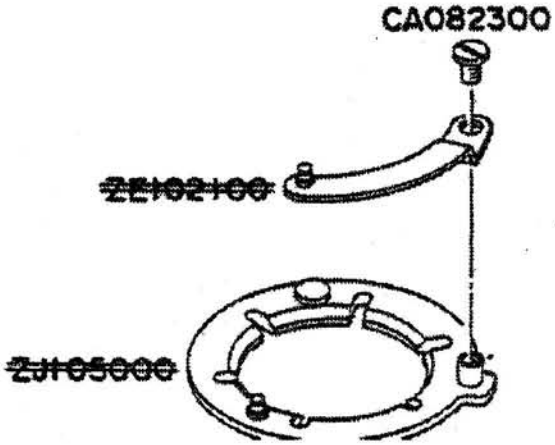

NEW

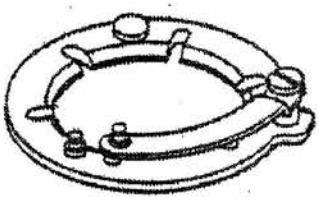

ZJ138500

変更部品表 IMPROVED PARTS TABLE

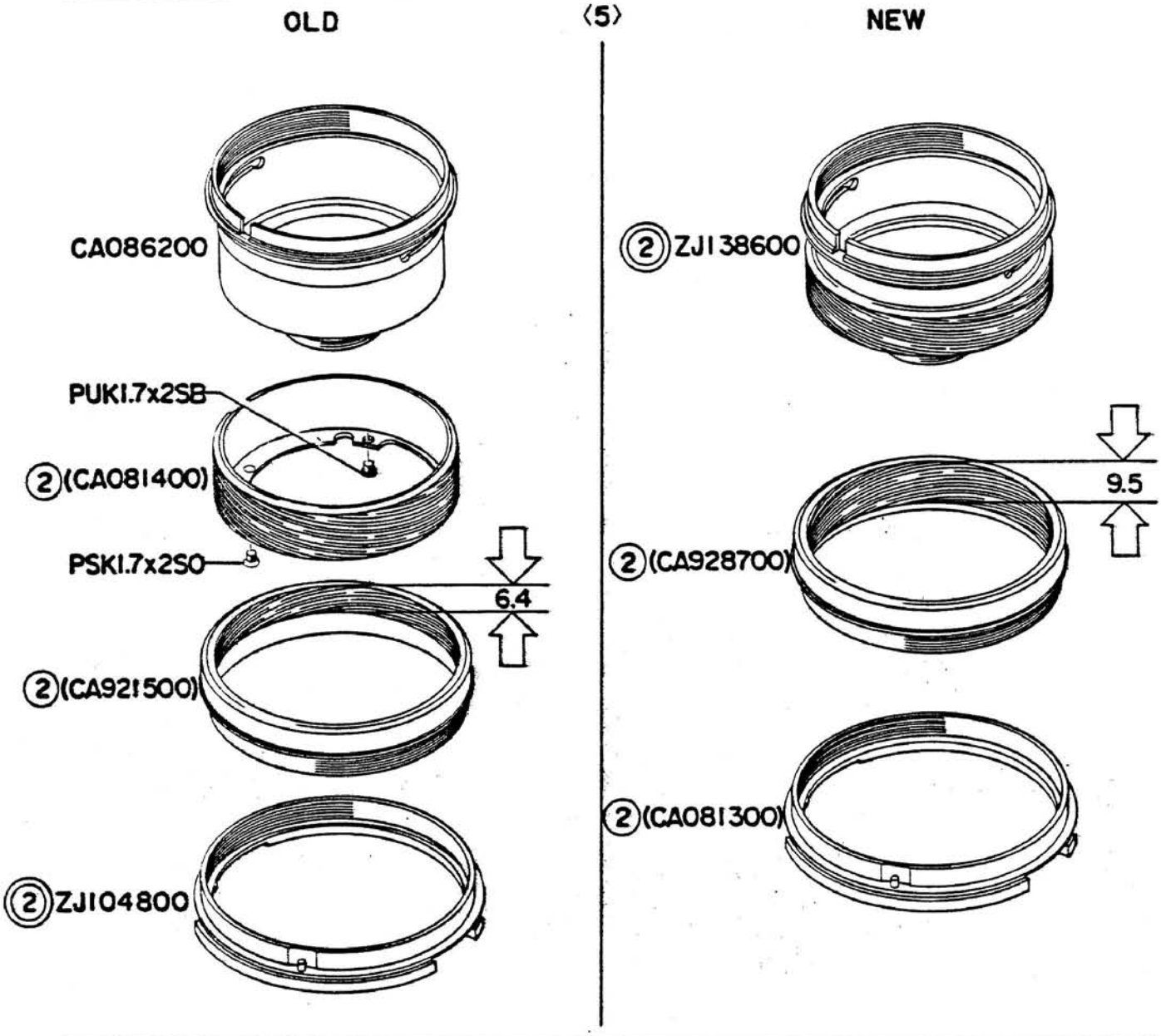

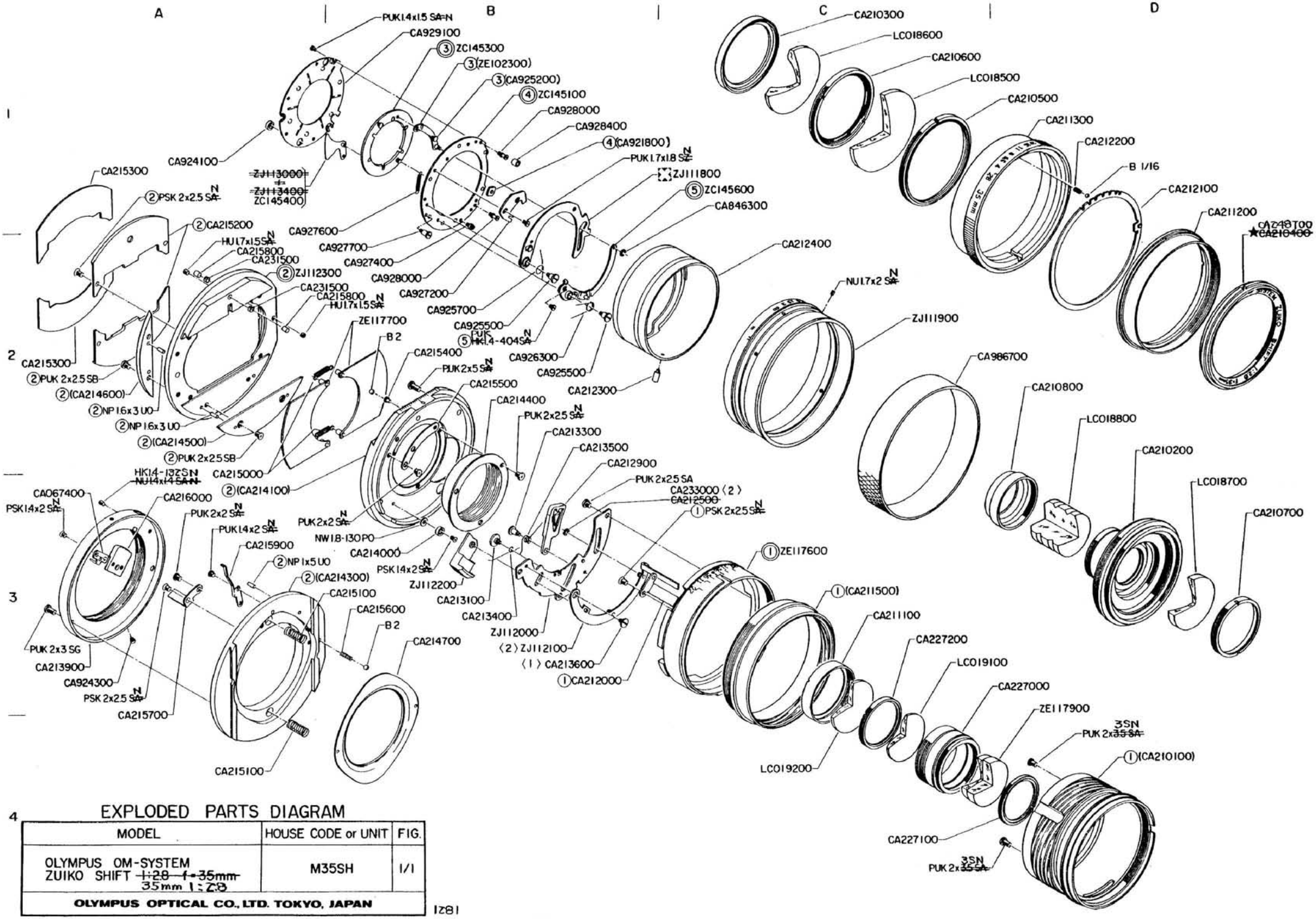

EXPLODED PARTS DIAGRAM

MODEL	HOUSE CODE or UNIT	FIG.
OLYMPUS OM-SYSTEM ZUIKO SHIFT ~~1:2.8 f=35mm~~ 35mm 1:2.8	M35SH	1/1
OLYMPUS OPTICAL CO., LTD. TOKYO, JAPAN		

1281

NOTE: WHEN ORDERING FOR SPARE PARTS, PLEASE CLARIFY A MODEL, PARTS NUMBER AND QUANTITY.

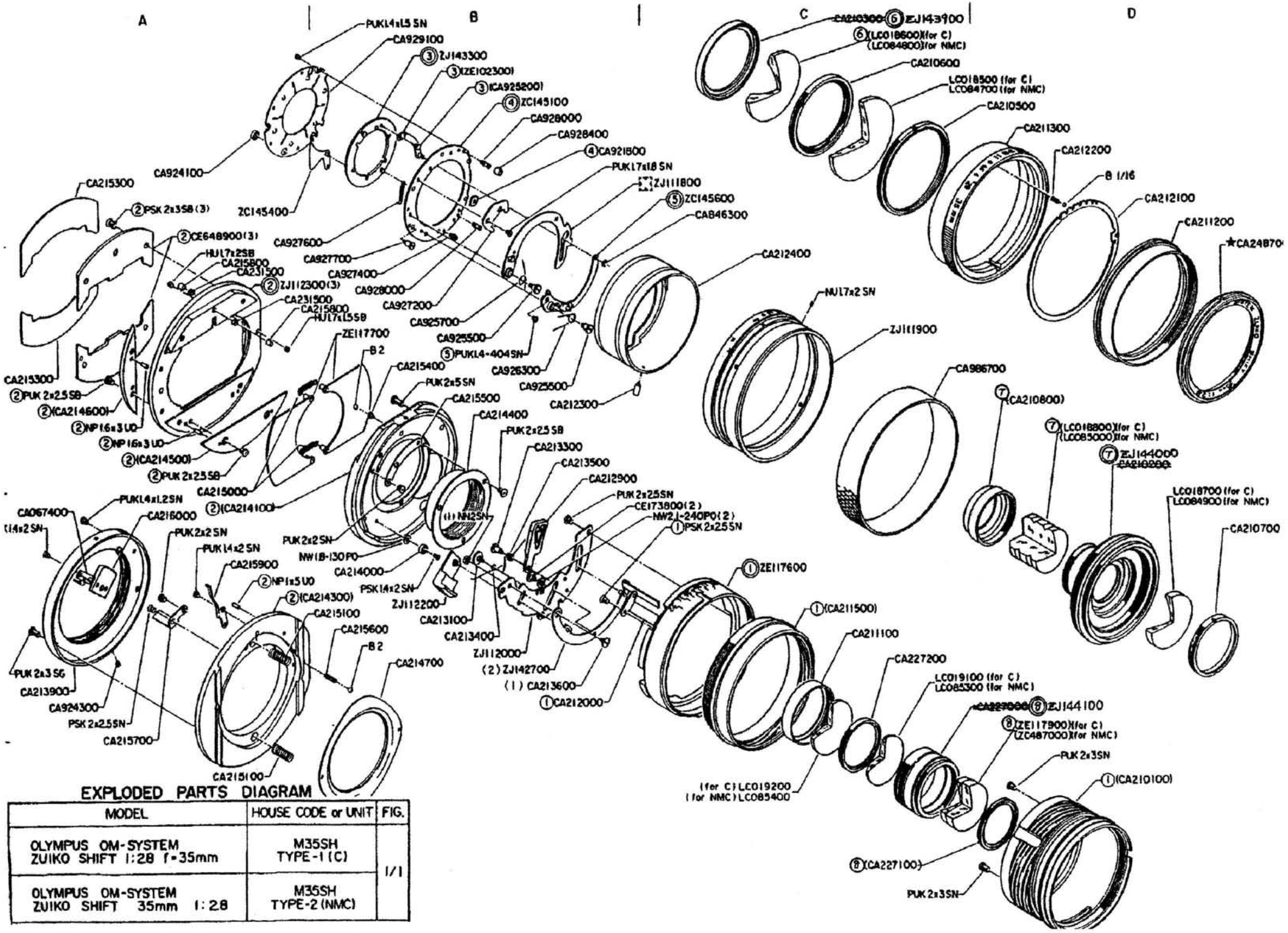

EXPLODED PARTS DIAGRAM

MODEL	HOUSE CODE or UNIT	FIG.
OLYMPUS OM-SYSTEM ZUIKO SHIFT 1:2.8 f=35mm	M35SH TYPE-1 (C)	1/1
OLYMPUS OM-SYSTEM ZUIKO SHIFT 35mm 1:2.8	M35SH TYPE-2 (NMC)	

M35SH 変更部品表 IMPROVED PARTS TABLE

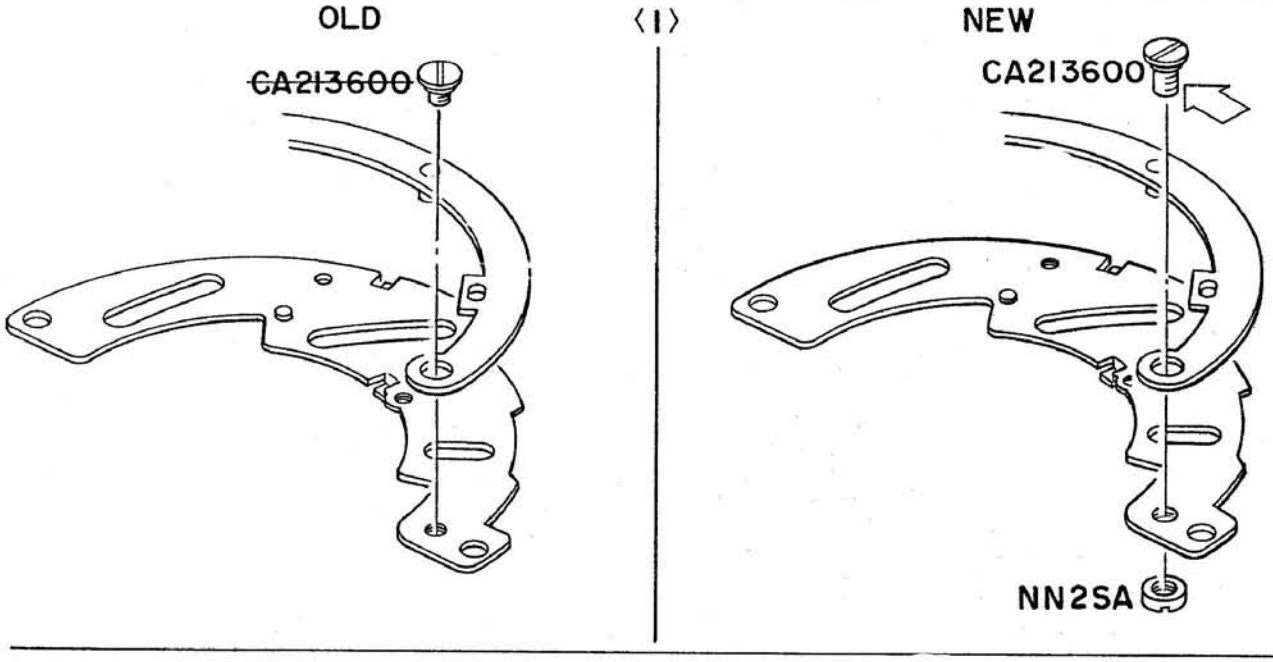

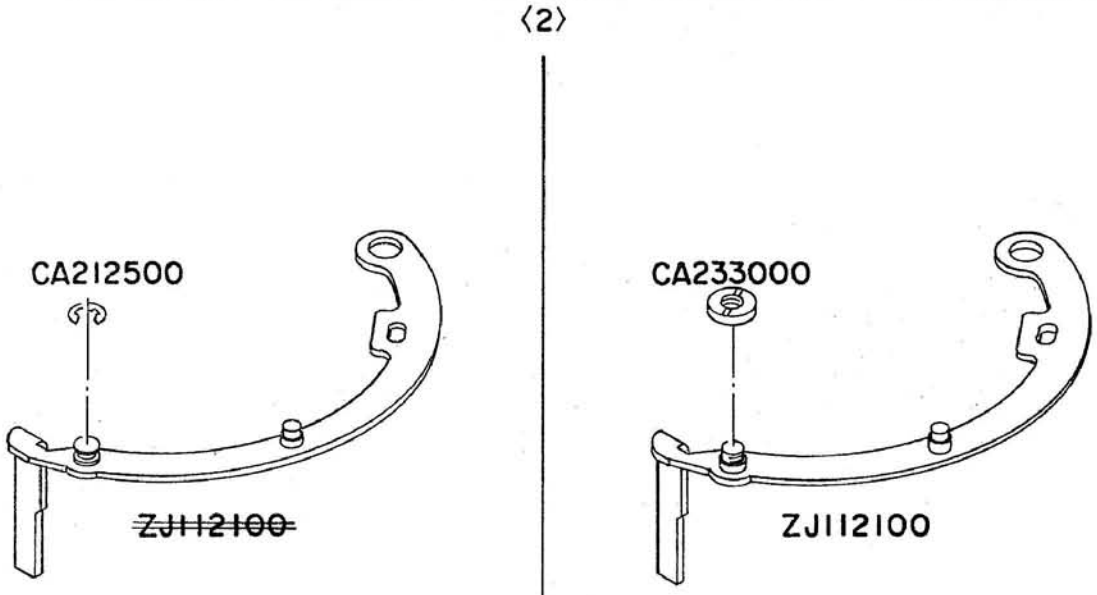

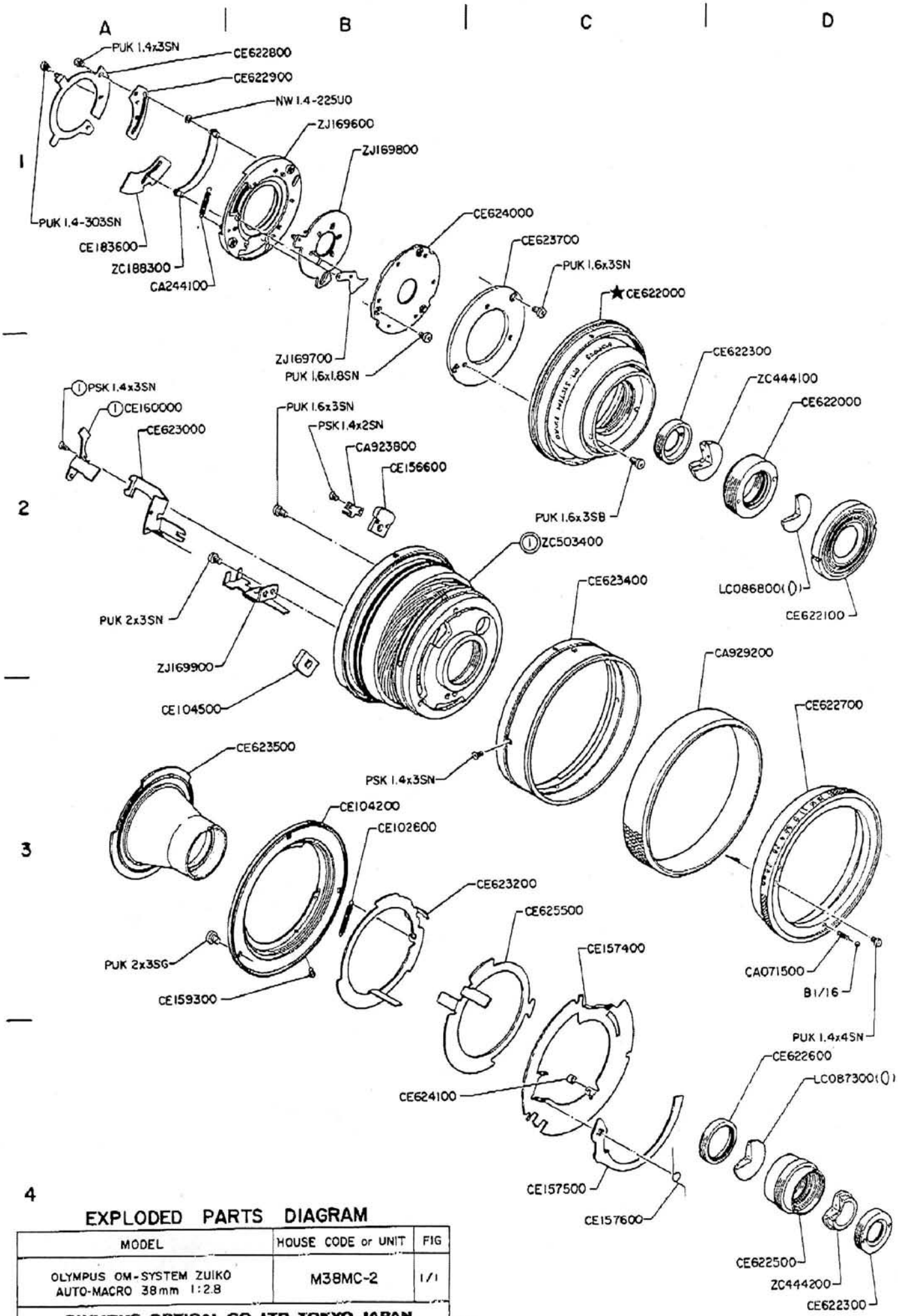

EXPLODED PARTS DIAGRAM

MODEL	HOUSE CODE or UNIT	FIG
OLYMPUS OM-SYSTEM ZUIKO AUTO-MACRO 38mm 1:2.8	M38MC-2	1/1
OLYMPUS OPTICAL CO., LTD. TOKYO, JAPAN		

0503

NOTE: WHEN ORDERING FOR SPARE PARTS, PLEASE CLARIFY A MODEL or HOUSE CODE, PARTS NUMBER AND QUANTITY.

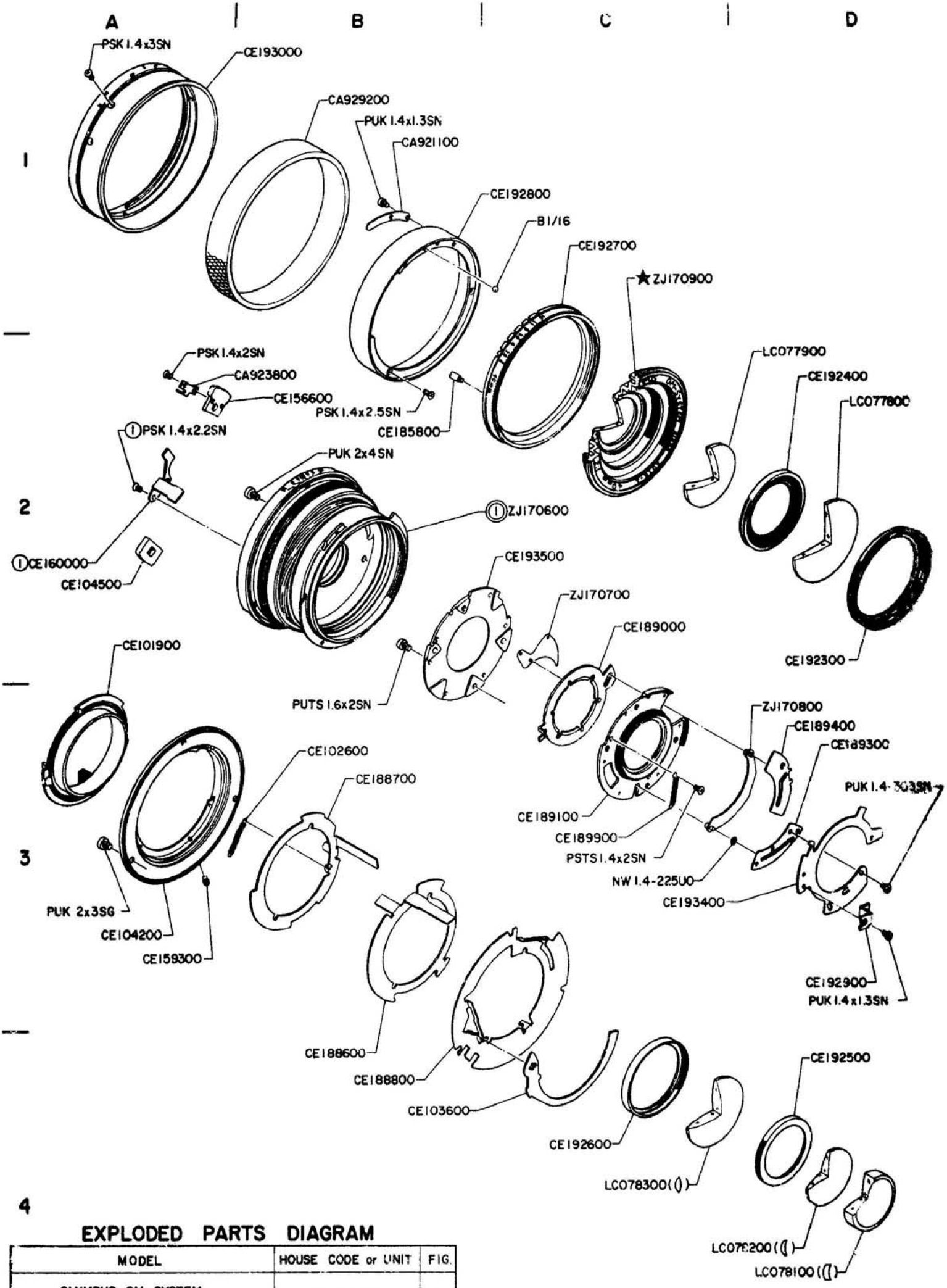

EXPLODED PARTS DIAGRAM

MODEL	HOUSE CODE or UNIT	FIG.
OLYMPUS OM-SYSTEM ZUIKO AUTO-S 40mm 1:2	MS4020	1/1
OLYMPUS OPTICAL CO., LTD. TOKYO, JAPAN		

0483

NOTE: WHEN ORDERING FOR SPARE PARTS, PLEASE CLARIFY A MODEL or HOUSE CODE, PARTS NUMBER AND QUANTITY.

OLYMPUS OM-SYSTEM ZUIKO AUTO S 40mm 1:2

PARTS LIST MS4020 1/1

PARTS NO.	NAME OF PARTS	NOTE
CA 921100	CLICK SPRING	B1
CA 923800	LOCK PLATE	B2
CA 929200	RUBBER GRIP	B1
CE 101900	COVER RING	A2
CE 102600	S SPRING	B3
CE 103600	PV LEVER	B4
CE 104200	L MOUNT RING	A3
CE 104500	PV BUTTON	A2
CE 156600	E BUTTON	B2
CE 159300	STOPPER SCREW	A3
CE 160000	GUIDE	A2
CE 185800	PIN	B2
CE 188600	CONNECTING RING	B4
CE 188700	CONNECTING RING	B3
CE 188800	HOLDING RING	B4
CE 189000	DIAPHRAGM PLATE	C2
CE 189100	D CASE	C3
CE 189300	D CAM	D3
CE 189400	CAM PLATE	D3
CE 189900	D SPRING	C3
CE 192300	FRONT LENS HOLDER	D2
CE 192400	LENS HOLDER	D2
CE 192500	LENS HOLDER	D2
CE 192600	REAR LENS HOLDER	C4
CE 192700	F STOP RING	C1
CE 192800	INDICATION RING	C1
CE 192900	GUIDE	D3
CE 193000	FOCUS RING	B1
CE 193400	HOLDING PLATE	C3
CE 193500	D BLADE HOLDER	C2
LC 077800	LENS #1	D2
LC 077900	LENS #2	D2
LC 078100	LENS #4	D4
LC 078200	LENS #5	D4
LC 078300	LENS #6	C4

PARTS NO.	NAME OF PARTS	NOTE
ZJ 170600	HELICOID ASS'Y	C2
ZJ 170700	DIAPHRAGM BLADE	C2
ZJ 170800	K LEVER	D3
ZJ 170900	LENS BARREL ASS'Y	C1

PUK1.4X1.3SN	SCREW
PUK1.4-303SN	SCREW
PUK2 X 3 SG	SCREW
PUK2 X 4 SN	SCREW
PSK1.4X2SN	SCREW
PSK1.4X2.2SN	SCREW
PSK1.4X2.5SN	SCREW
PSK1.4X 3 SN	SCREW
PUTS1.6X2SN	SCREW
PSTS1.4X2SN	SCREW
B 1/16	BALL
NW1.4-225UO	WASHER

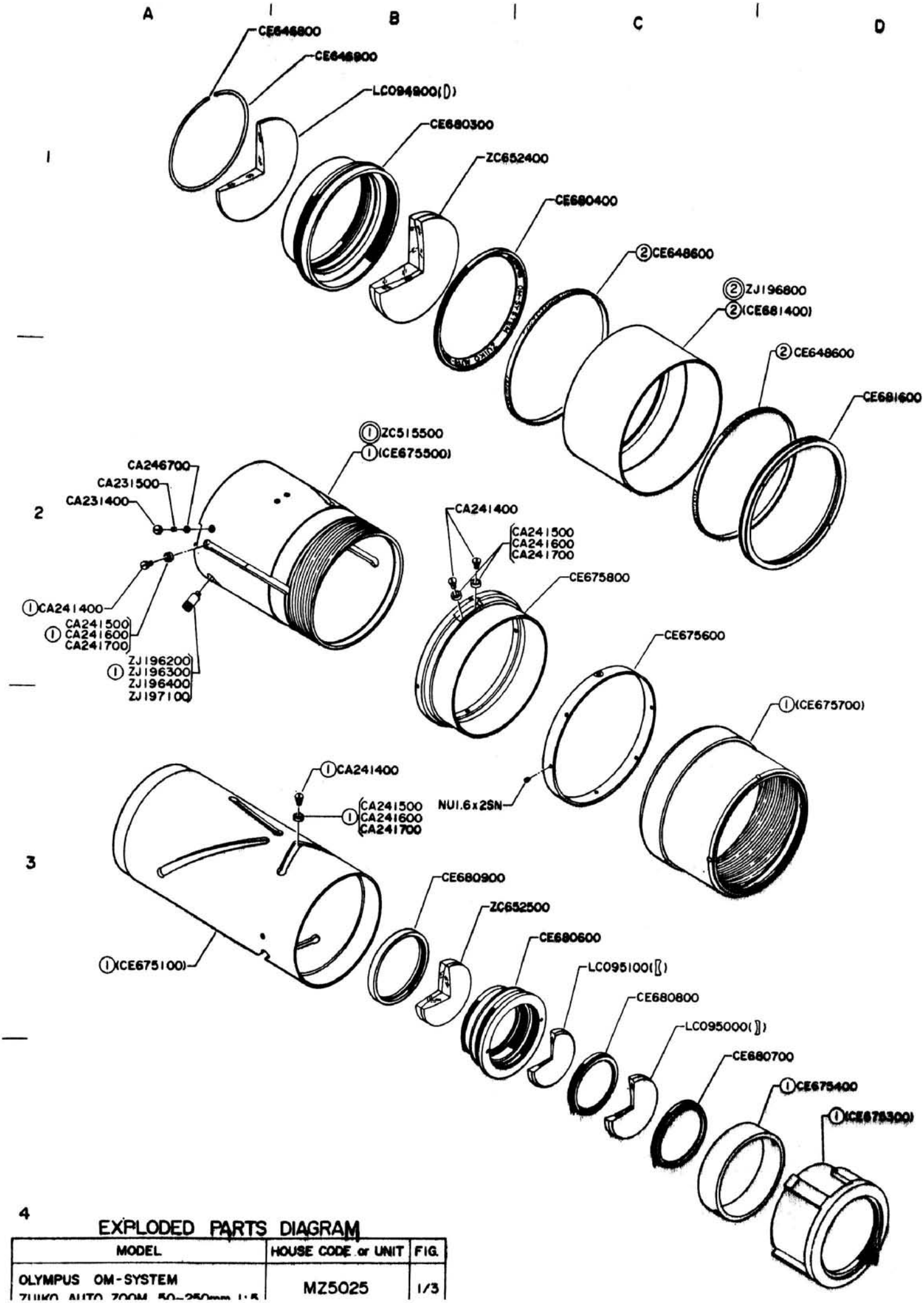

EXPLODED PARTS DIAGRAM

MODEL	HOUSE CODE or UNIT	FIG.
OLYMPUS OM-SYSTEM ZUIKO AUTO ZOOM 50~250mm 1:5	MZ5025	1/3

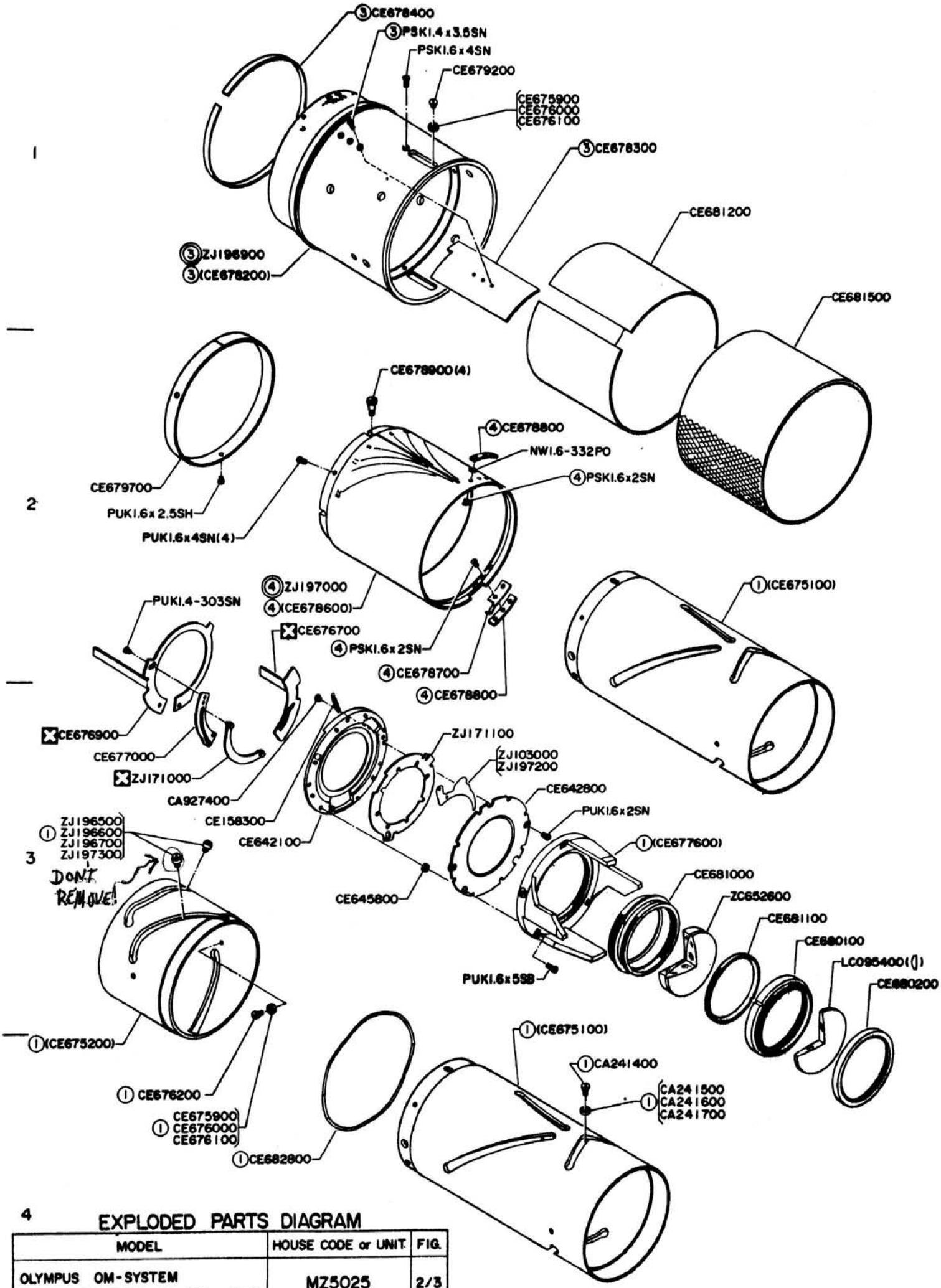

EXPLODED PARTS DIAGRAM

MODEL	HOUSE CODE or UNIT	FIG.
OLYMPUS OM-SYSTEM ZUIKO AUTO ZOOM 50~250mm 1:5	MZ5025	2/3

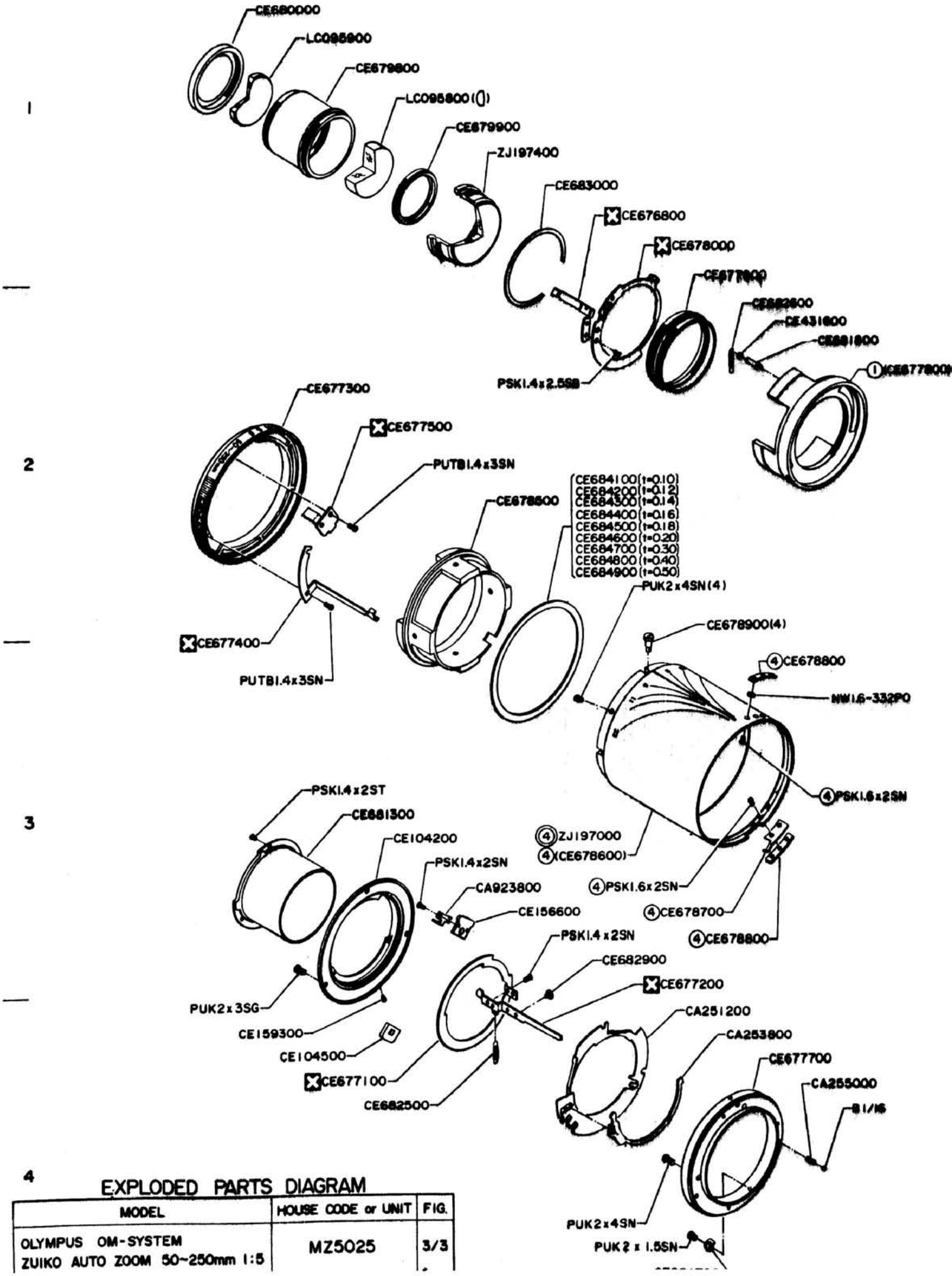

EXPLODED PARTS DIAGRAM

MODEL	HOUSE CODE or UNIT	FIG.
OLYMPUS OM-SYSTEM ZUIKO AUTO ZOOM 50~250mm 1:5	MZ5025	3/3

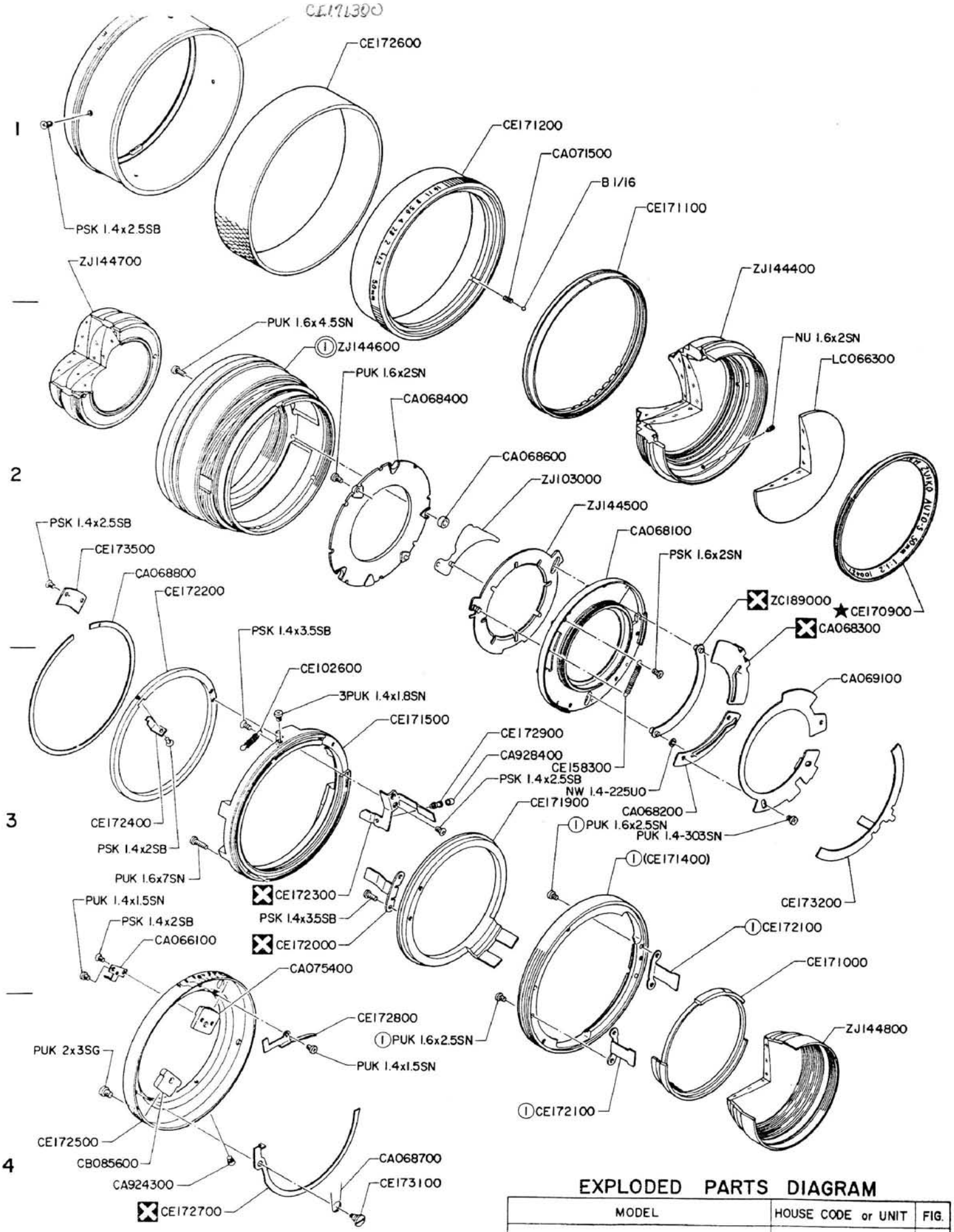

EXPLODED PARTS DIAGRAM

MODEL	HOUSE CODE or UNIT	FIG.
OLYMPUS OM-SYSTEM ZUIKO AUTO-S 50mm 1:1.2	MS5012	1/1
0682 **OLYMPUS OPTICAL CO., LTD. TOKYO, JAPAN**		

NOTE : WHEN ORDERING FOR SPARE PARTS, PLEASE CLARIFY A MODEL or HOUSE CODE, PARTS NUMBER AND QUANTITY.

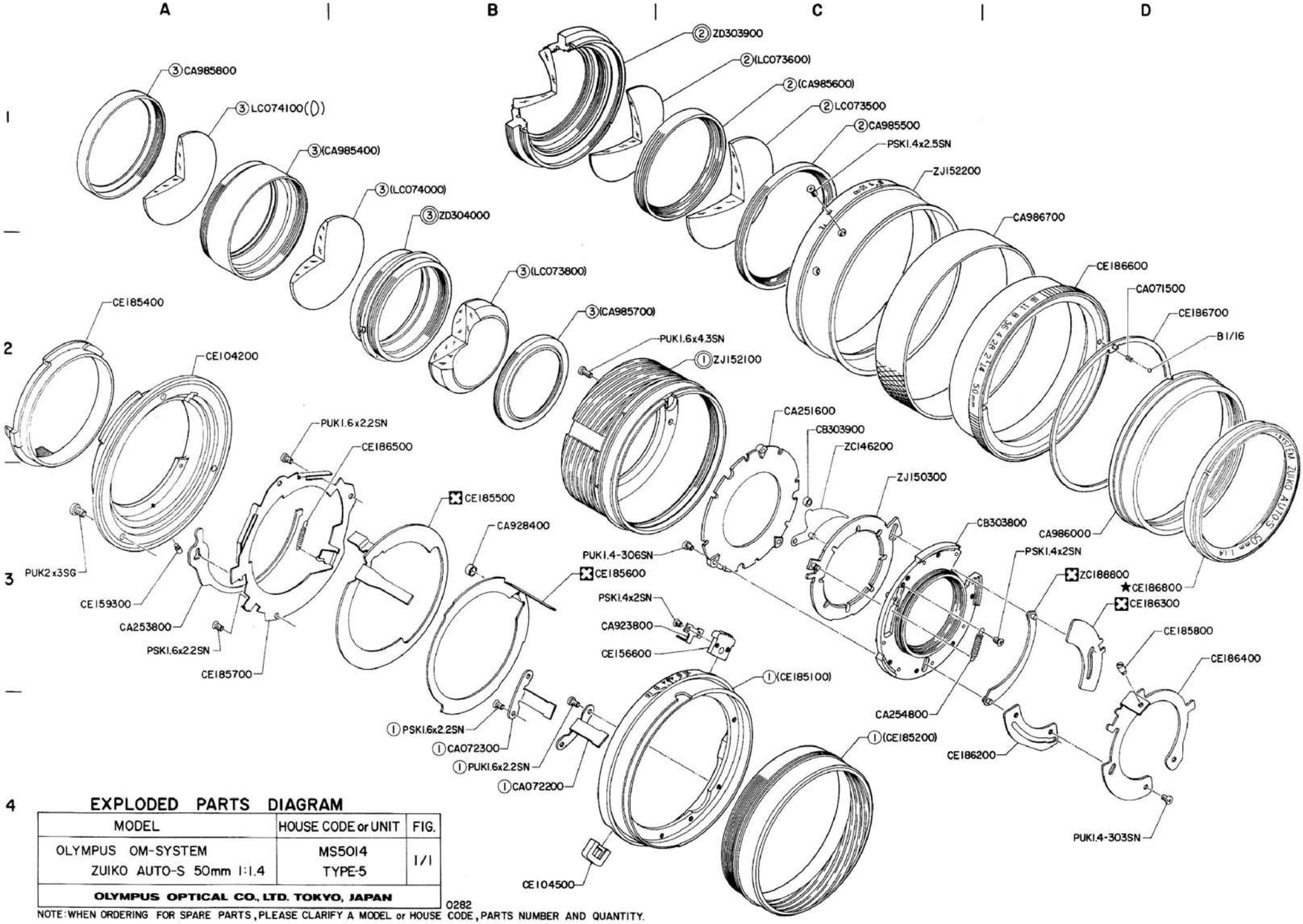

EXPLODED PARTS DIAGRAM

MODEL	HOUSE CODE or UNIT	FIG.
OLYMPUS OM-SYSTEM ZUIKO AUTO-S 50mm 1:1.4	MS5014 TYPE-5	1/1
OLYMPUS OPTICAL CO., LTD. TOKYO, JAPAN		

0282

NOTE: WHEN ORDERING FOR SPARE PARTS, PLEASE CLARIFY A MODEL or HOUSE CODE, PARTS NUMBER AND QUANTITY.

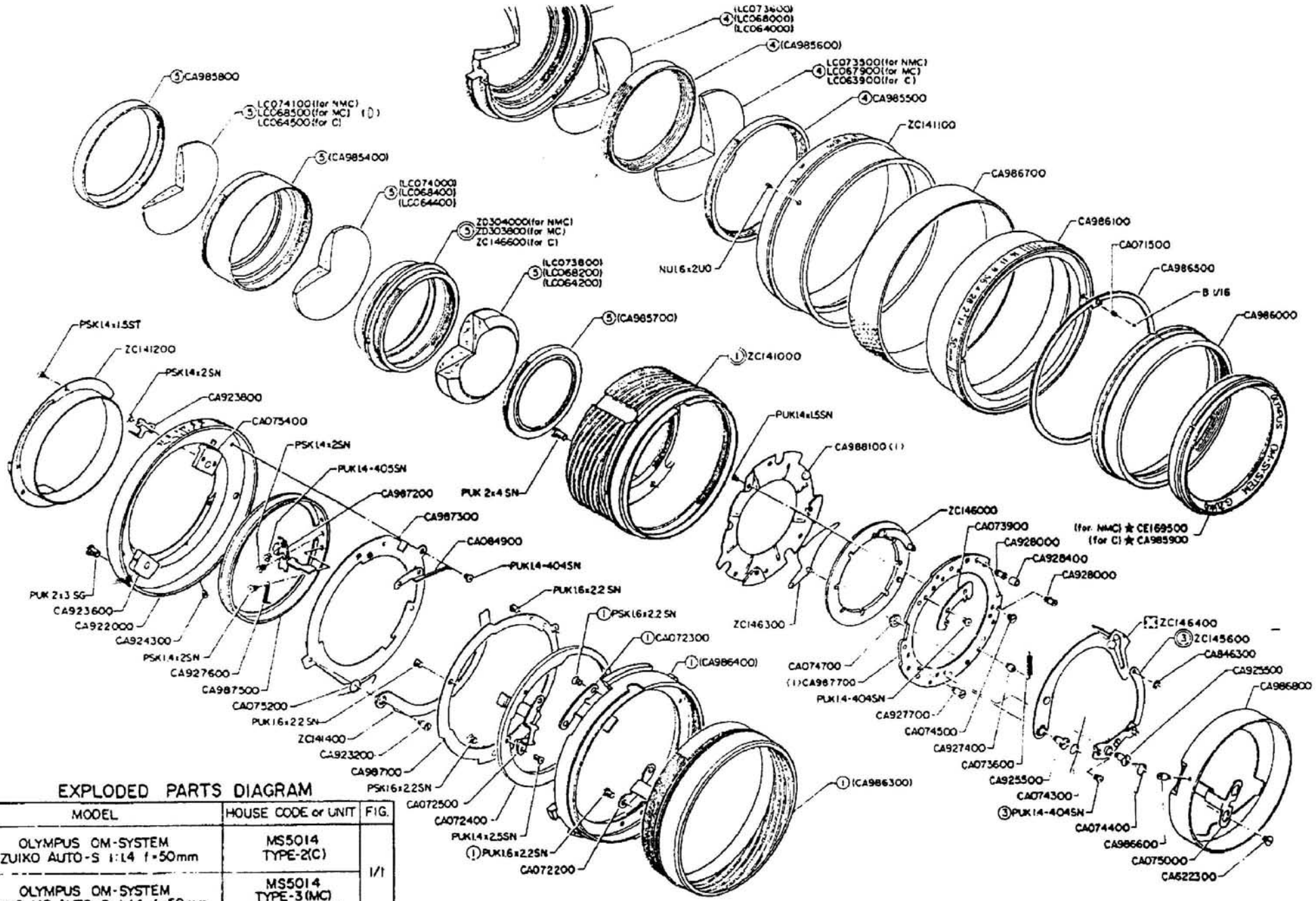

EXPLODED PARTS DIAGRAM

MODEL	HOUSE CODE or UNIT	FIG.
OLYMPUS OM-SYSTEM G. ZUIKO AUTO-S 1:1.4 f=50mm	MS5014 TYPE-2(C)	1/1
OLYMPUS OM-SYSTEM ZUIKO MC AUTO-S 1:1.4 f=50mm	MS5014 TYPE-3(MC) TYPE-4(NMC)	
OLYMPUS OPTICAL CO., LTD. TOKYO, JAPAN		

0383

NOTE: WHEN ORDERING FOR SPARE PARTS, PLEASE CLARIFY A MODEL or HOUSE CODE, PARTS NUMBER AND QUANTITY.

- DEC 1983

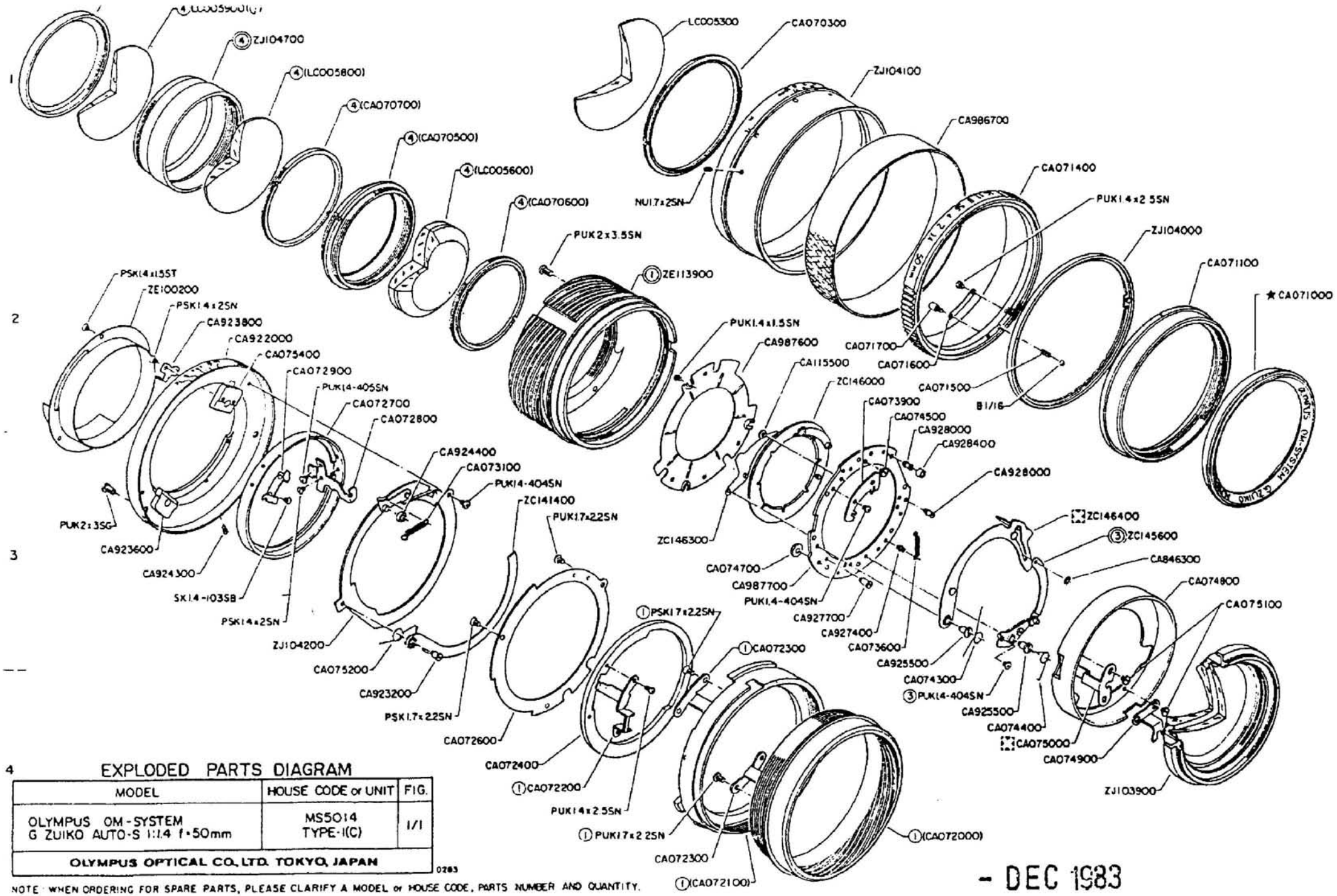

EXPLODED PARTS DIAGRAM

MODEL	HOUSE CODE or UNIT	FIG.
OLYMPUS OM-SYSTEM G ZUIKO AUTO-S 1:1.4 f=50mm	MS5014 TYPE-I(C)	1/1
OLYMPUS OPTICAL CO., LTD. TOKYO, JAPAN		

0283

NOTE: WHEN ORDERING FOR SPARE PARTS, PLEASE CLARIFY A MODEL or HOUSE CODE, PARTS NUMBER AND QUANTITY.

- DEC 1983

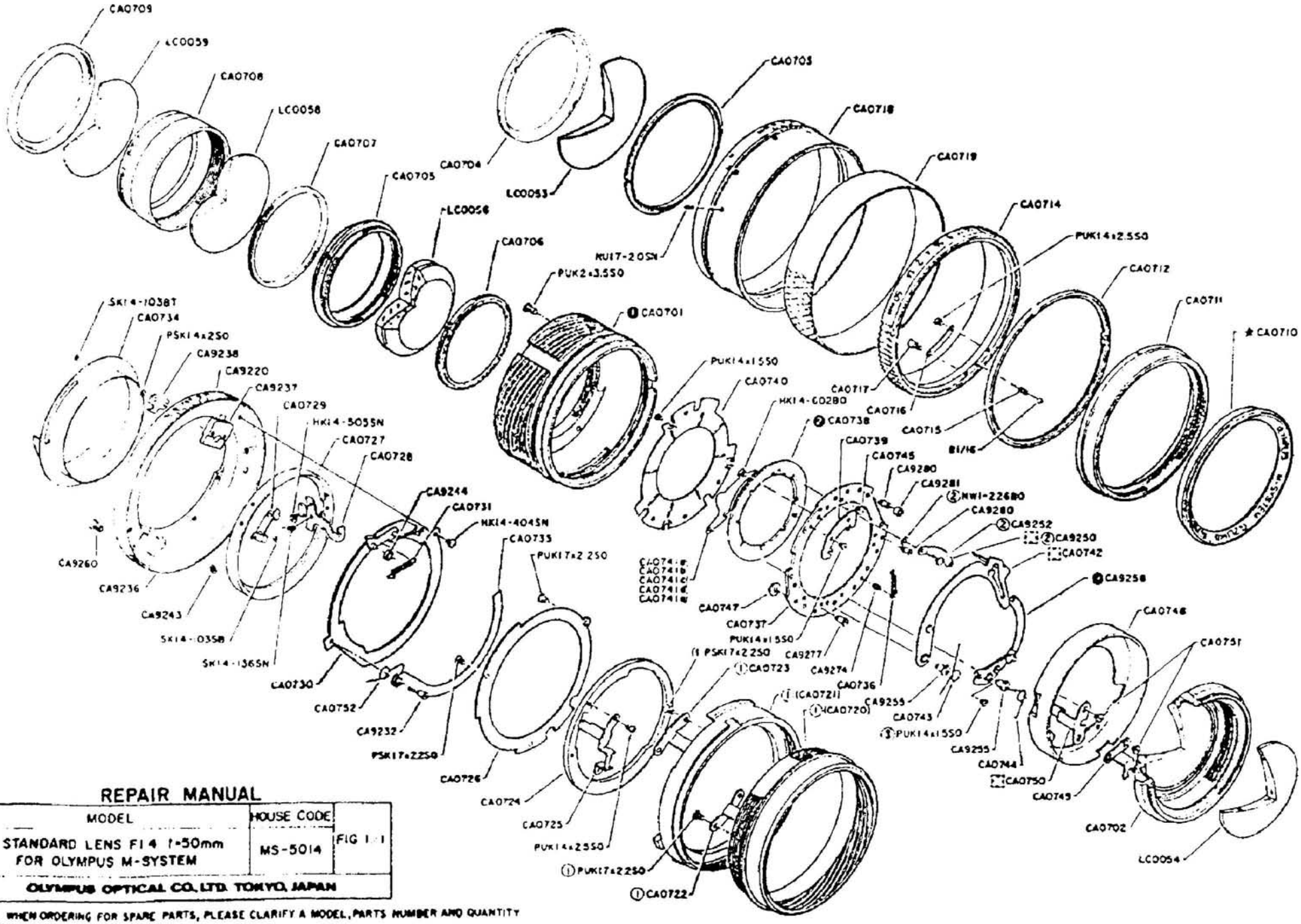

REPAIR MANUAL

MODEL	HOUSE CODE	FIG 1-1
STANDARD LENS F1.4 f=50mm FOR OLYMPUS M-SYSTEM	MS-5014	
OLYMPUS OPTICAL CO. LTD. TOKYO, JAPAN		

NOTE WHEN ORDERING FOR SPARE PARTS, PLEASE CLARIFY A MODEL, PARTS NUMBER AND QUANTITY

MS5014
(TYPE-2·3·4)

変更部品表 IMPROVED PARTS TABLE

〈1〉

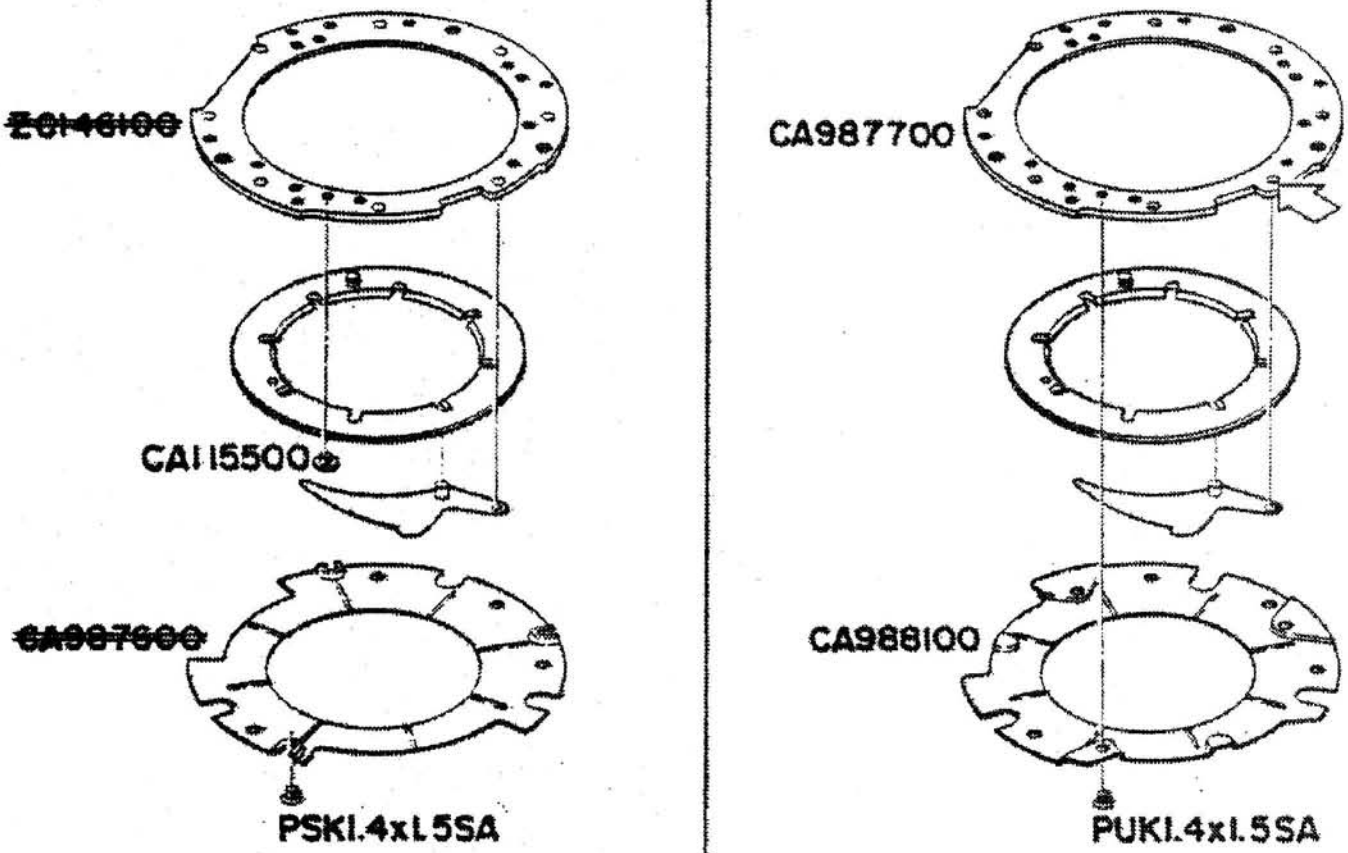

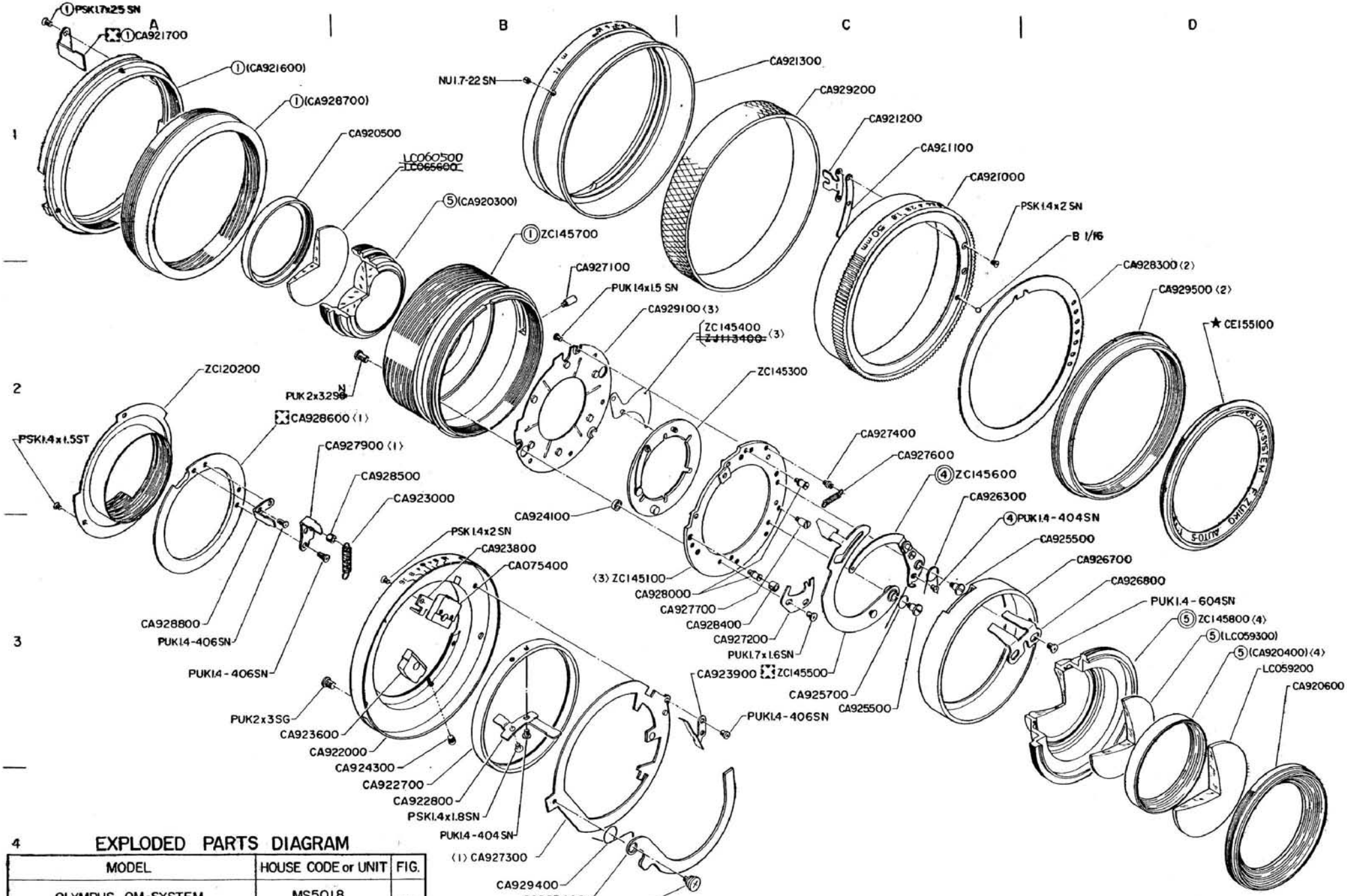

EXPLODED PARTS DIAGRAM

MODEL	HOUSE CODE or UNIT	FIG.
OLYMPUS OM-SYSTEM F. ZUIKO AUTO-S 1:1.8 f=50mm	MS5018 TYPE-1	1/1
OLYMPUS OPTICAL CO., LTD. TOKYO, JAPAN		

1281
~~1180~~

NOTE: WHEN ORDERING FOR SPARE PARTS, PLEASE CLARIFY A MODEL, PARTS NUMBER AND QUANTITY

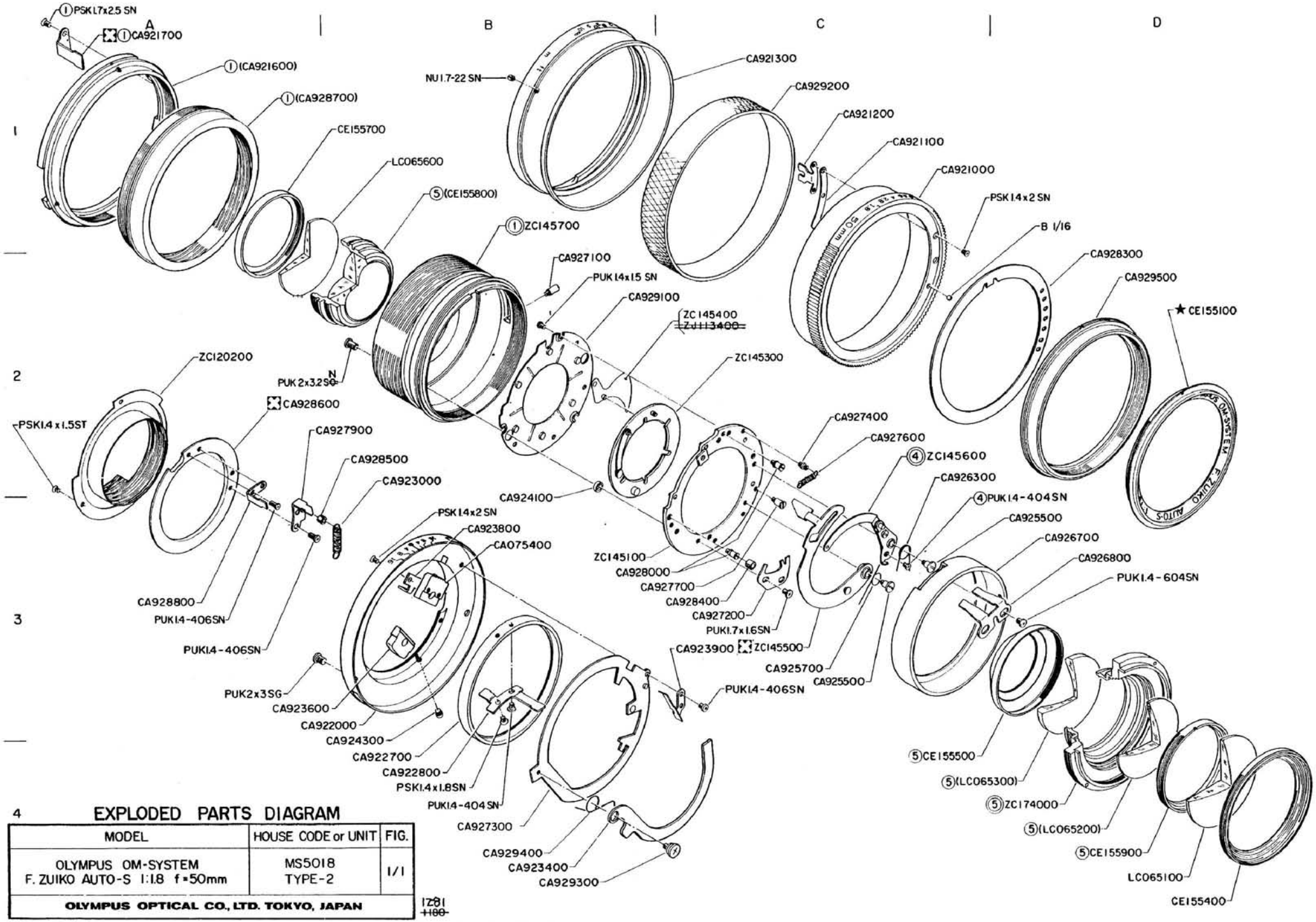

EXPLODED PARTS DIAGRAM

MODEL	HOUSE CODE or UNIT	FIG.
OLYMPUS OM-SYSTEM F. ZUIKO AUTO-S 1:1.8 f=50mm	MS5018 TYPE-2	1/1
OLYMPUS OPTICAL CO., LTD. TOKYO, JAPAN		

1Z81
~~1180~~

NOTE: WHEN ORDERING FOR SPARE PARTS, PLEASE CLARIFY A MODEL, PARTS NUMBER AND QUANTITY

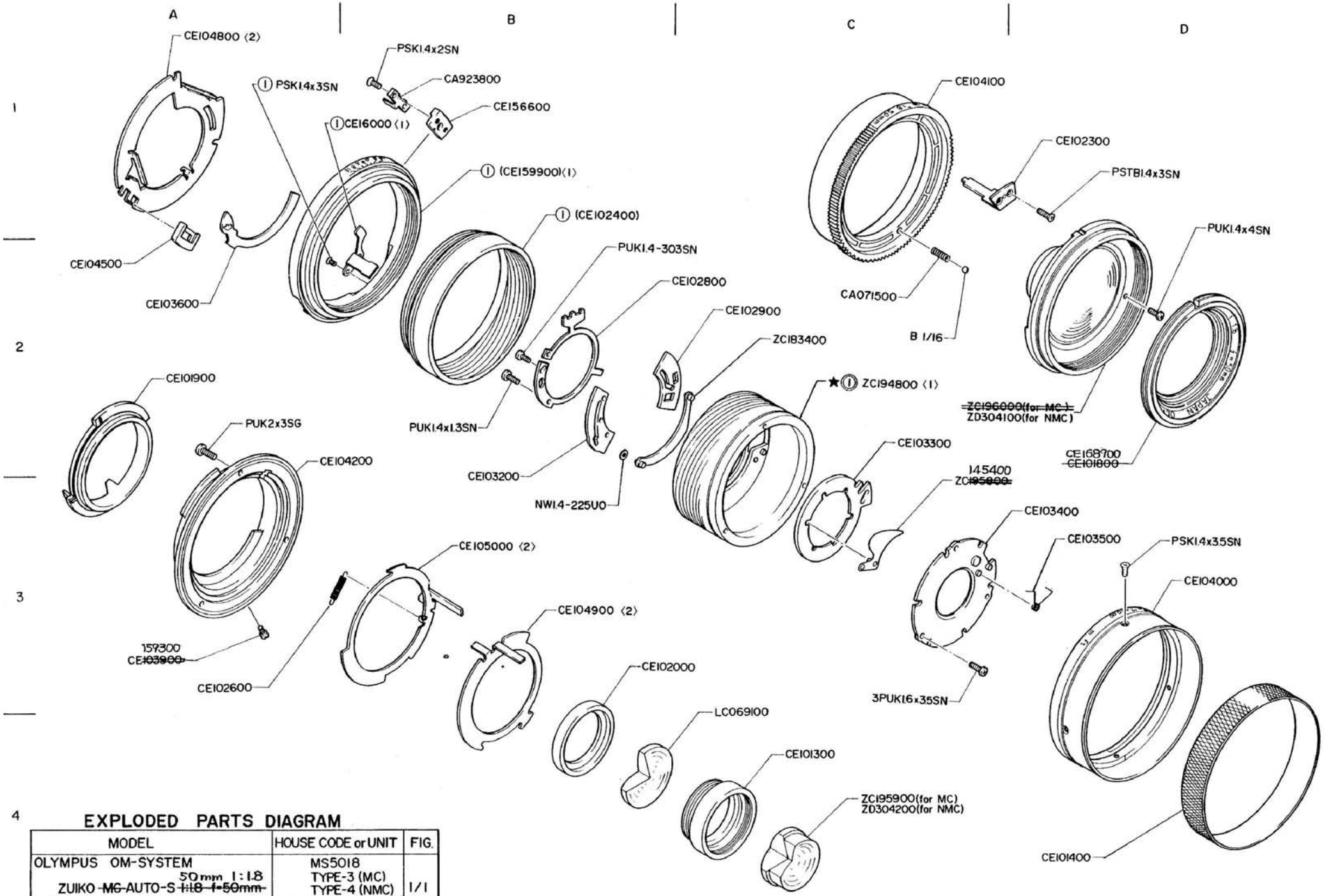

EXPLODED PARTS DIAGRAM

MODEL	HOUSE CODE or UNIT	FIG.
OLYMPUS OM-SYSTEM ZUIKO ~~MC~~-AUTO-S 50mm 1:1.8 ~~1:1.8 f=50mm~~	MS5018 TYPE-3 (MC) TYPE-4 (NMC)	1/1
OLYMPUS OPTICAL CO., LTD. TOKYO, JAPAN		

1281
~~1189~~

NOTE: WHEN ORDERING FOR SPARE PARTS, PLEASE CLARITY A MODEL or HOUSE CODE, PARTS NUMBER AND QUANTITY.

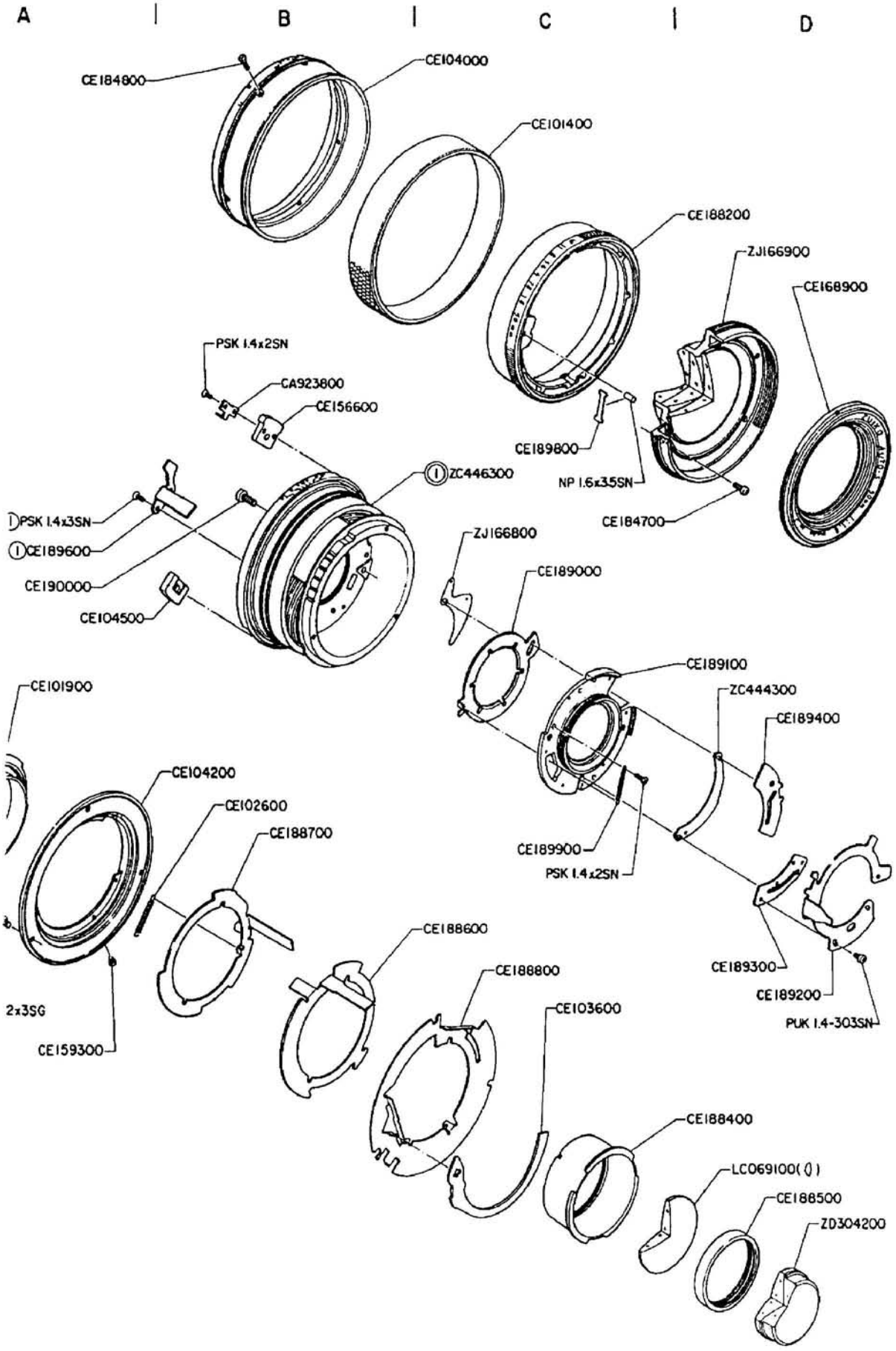

PLODED PARTS DIAGRAM

MODEL	HOUSE CODE or UNIT	FIG.
S OM-SYSTEM TO-S 50mm 1:1.8	MS5018 TYPE-5	1/1

US OPTICAL CO., LTD. TOKYO, JAPAN

11 JUL 1984

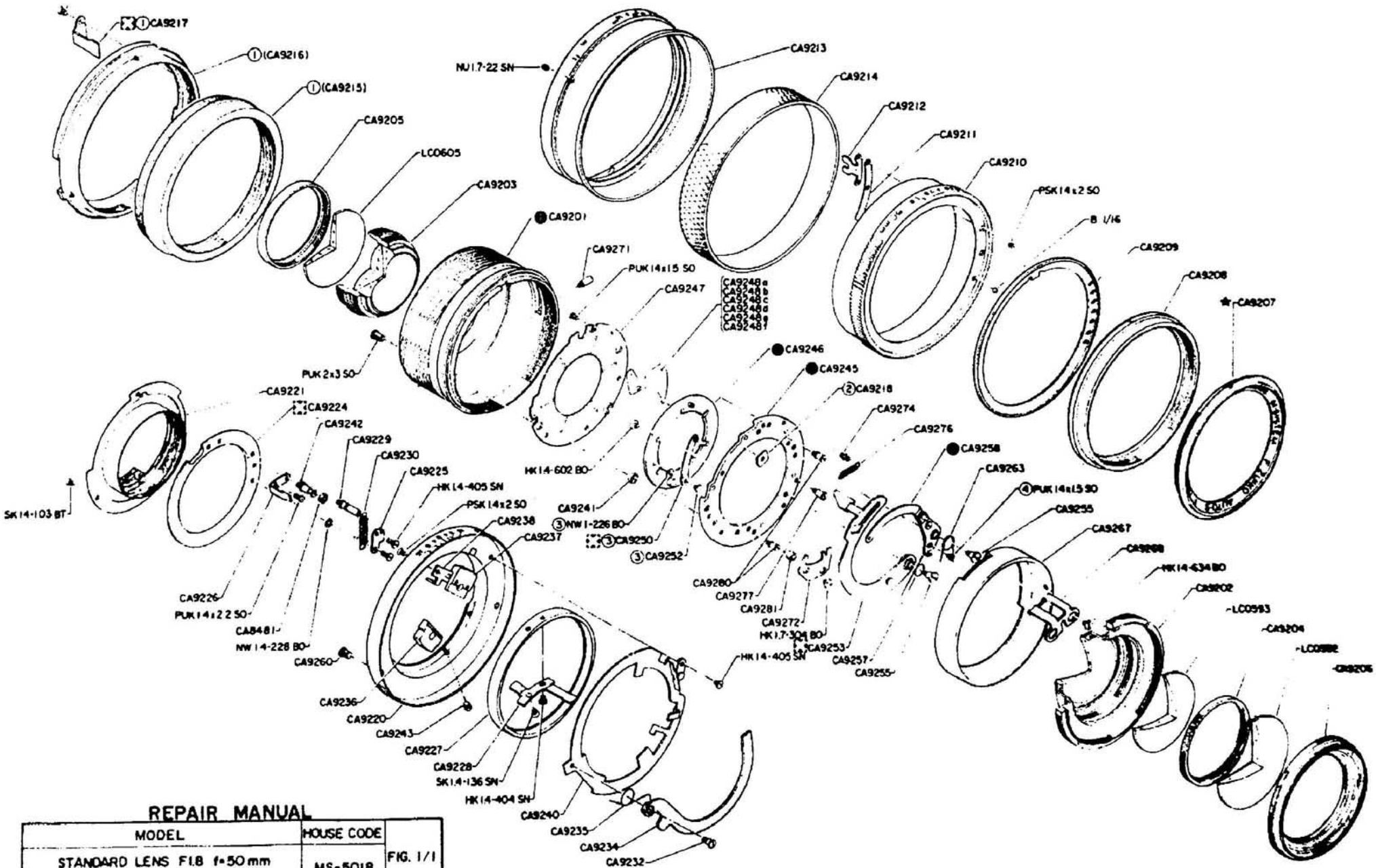

REPAIR MANUAL

MODEL	HOUSE CODE	
STANDARD LENS F1.8 f=50mm For OLYMPUS M-SYSTEM	MS-5018	FIG. 1/1
OLYMPUS OPTICAL CO., LTD. TOKYO, JAPAN		

NOTE WHEN ORDERING FOR SPARE PARTS, PLEASE CLARIFY A MODEL, PARTS NUMBER AND QUANTITY

MS 5018
(TYPE-1)

変更部品表 IMPROVED PARTS TABLE

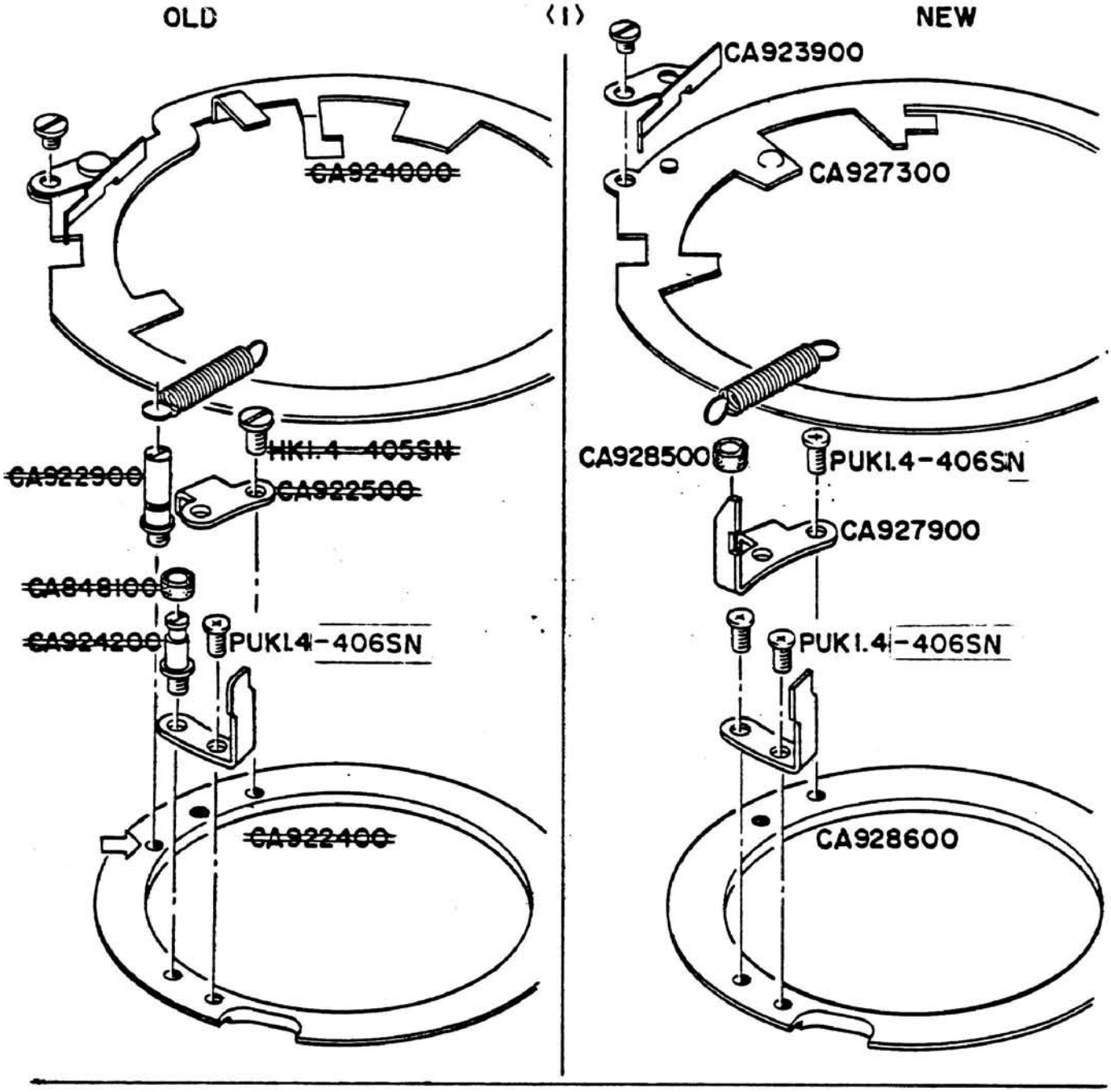

IMPROVED PARTS TABLE

〈2〉

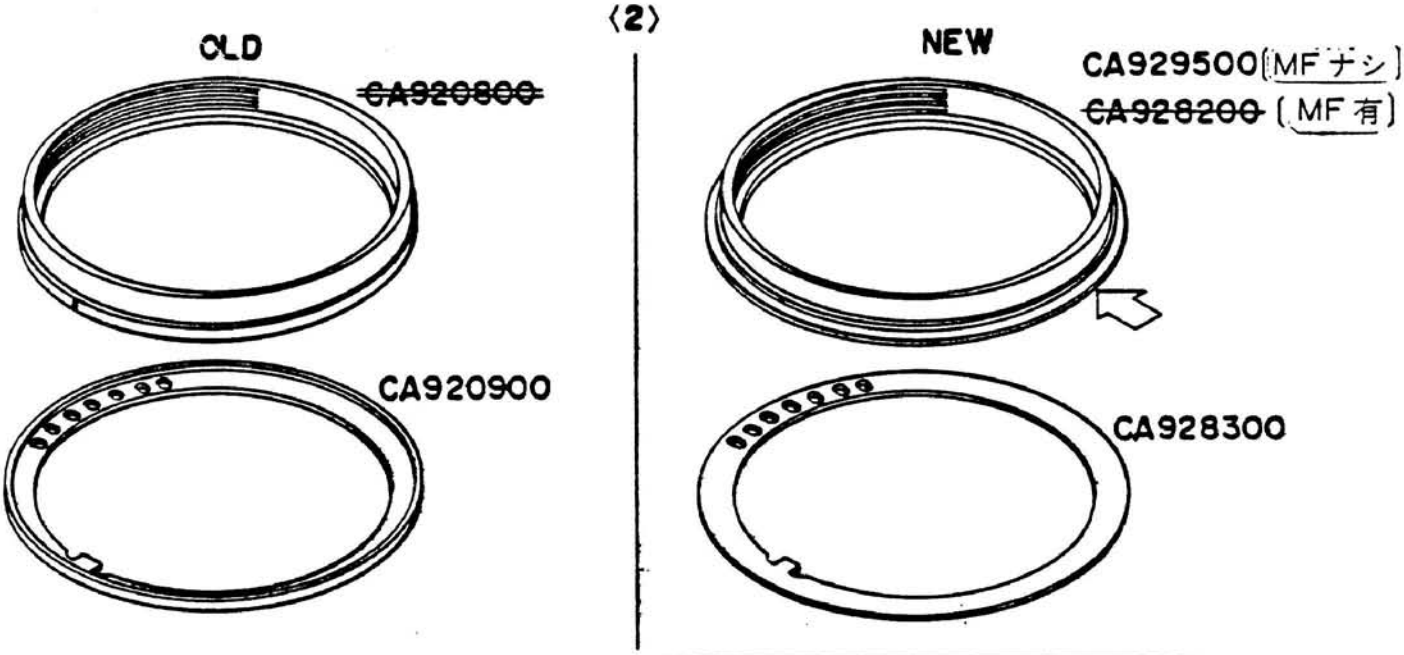

〈4〉

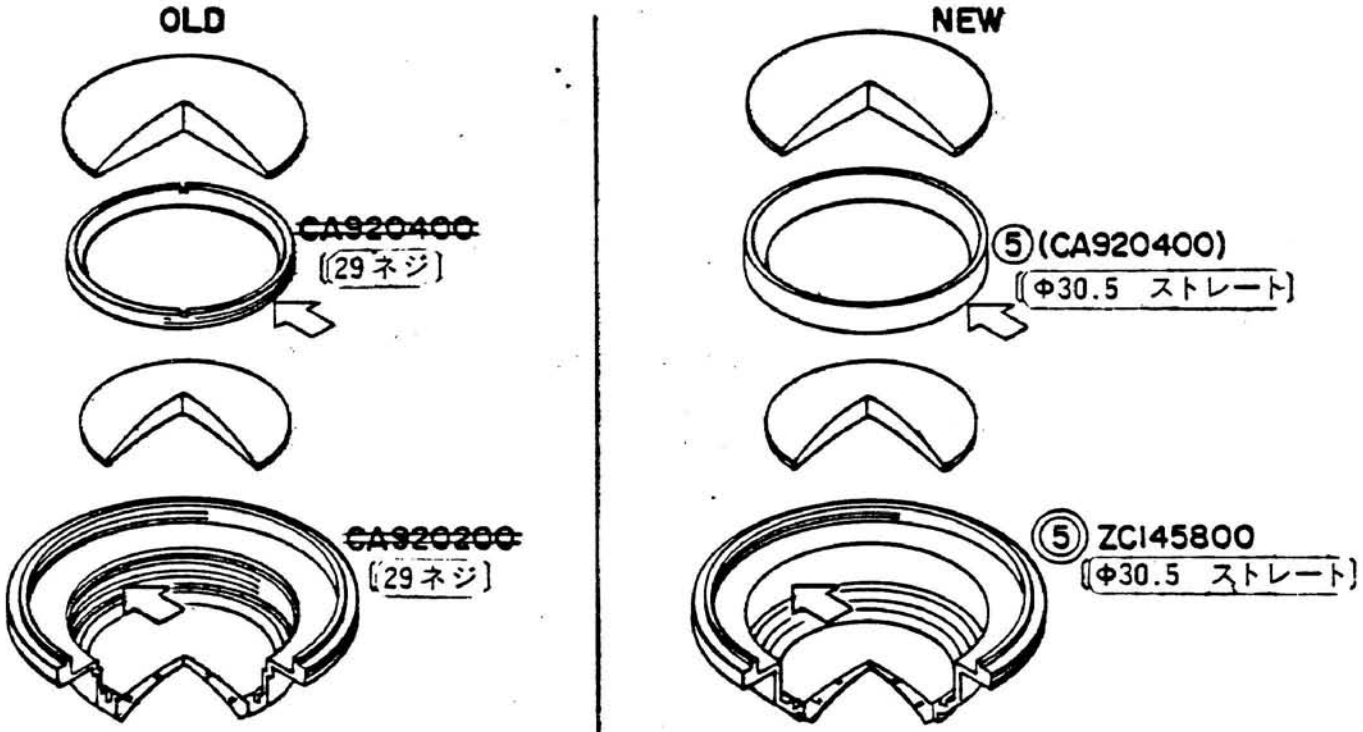

〈3〉

OLD

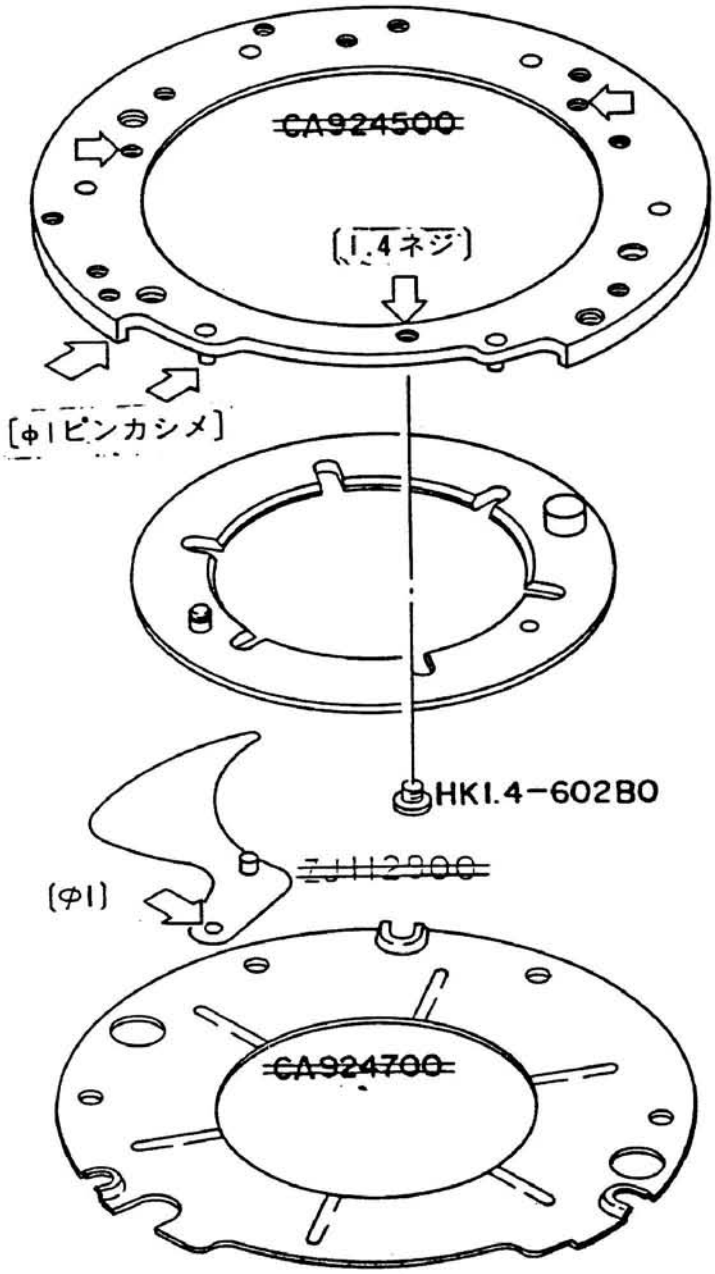
~~CA924500~~
[1.4ネジ]
[φ1ピンカシメ]
HK1.4-602B0
~~ZJ112300~~
(φ1)
~~CA924700~~

NEW

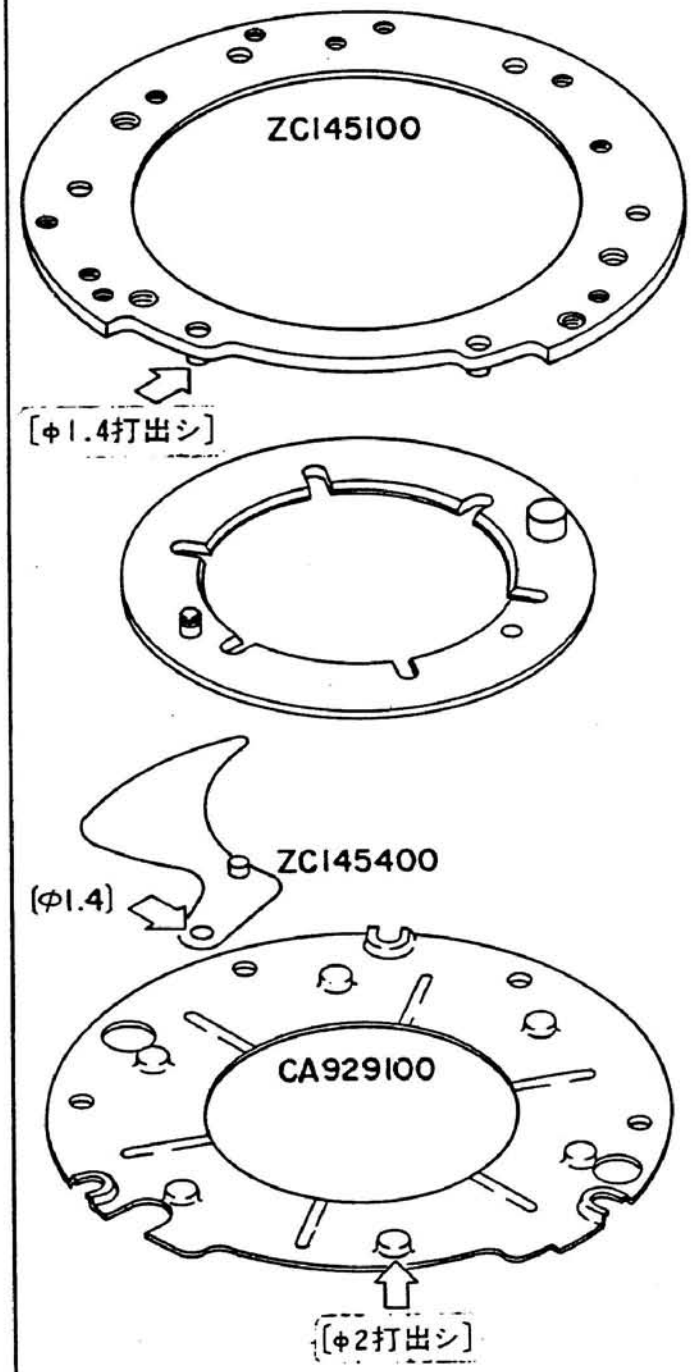
ZC145100
[φ1.4打出シ]
ZC145400
(φ1.4)
CA929100
[φ2打出シ]

MS5018
(TYPE-3·4)

変更部品表 IMPROVED PARTS TABLE

〈1〉

OLD

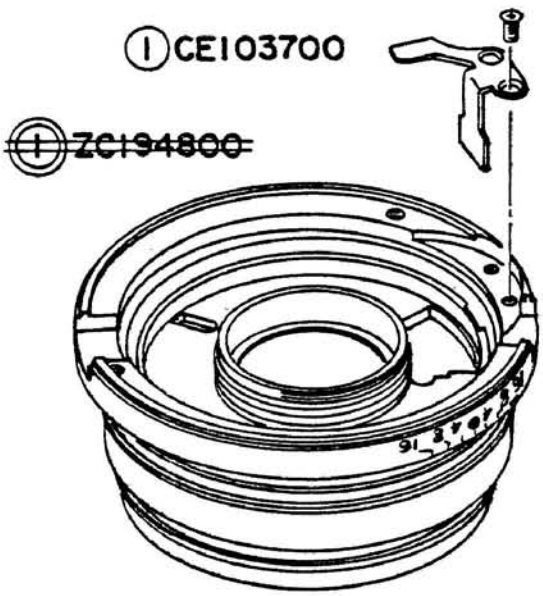

NEW

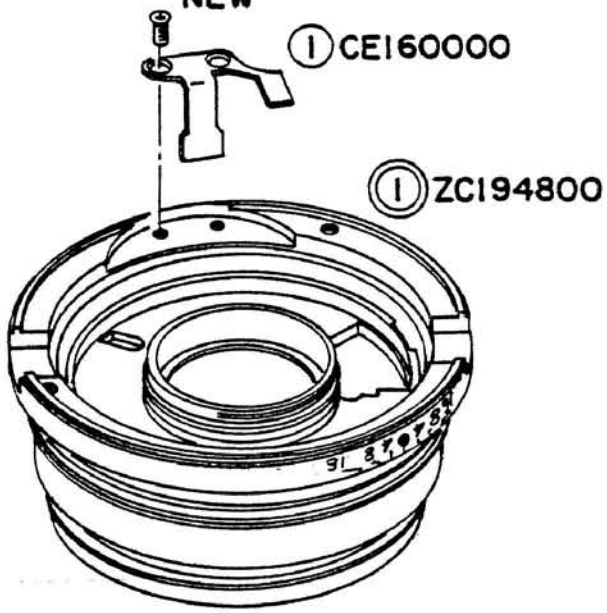

〈2〉

OLD

CE102100

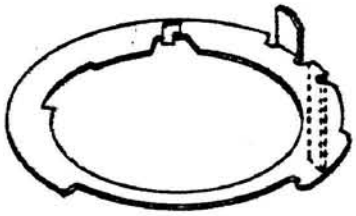

CE102200

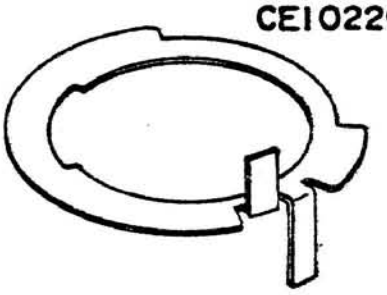

CE104400

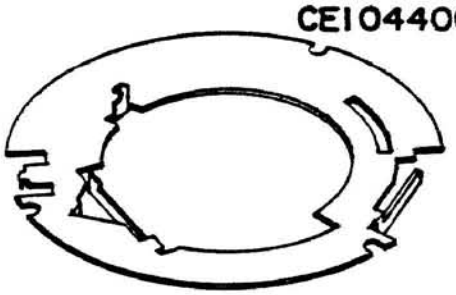

NEW

CE105000

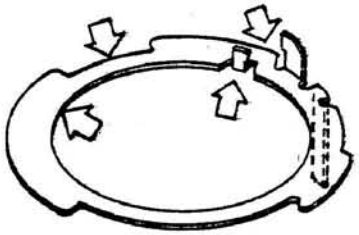

CE104900

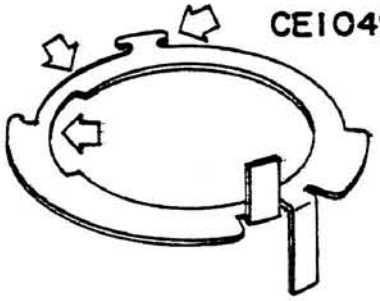

CE104800

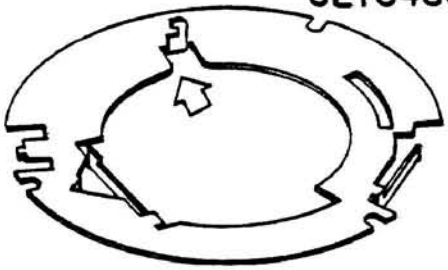

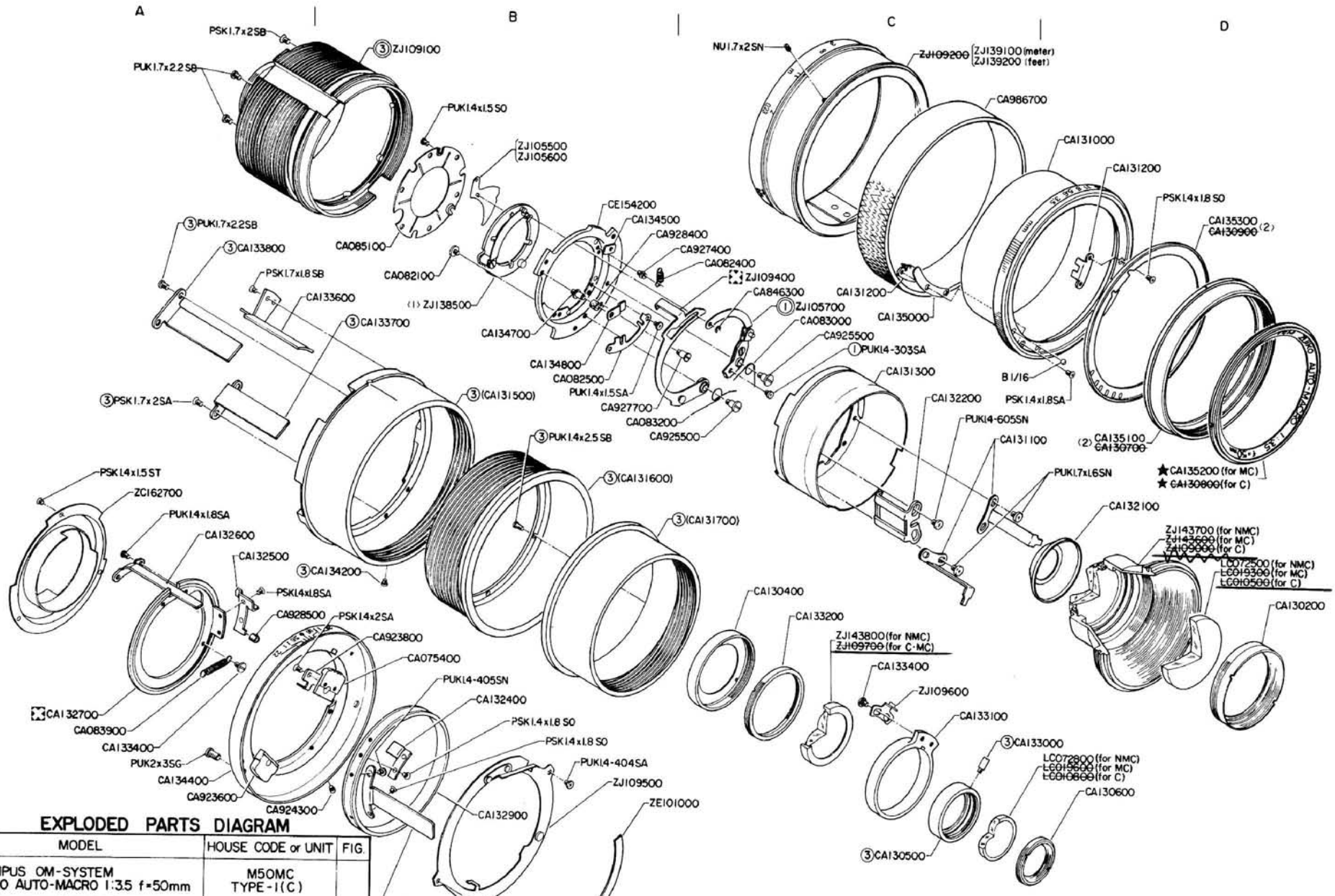

EXPLODED PARTS DIAGRAM

MODEL	HOUSE CODE or UNIT	FIG.
OLYMPUS OM-SYSTEM ZUIKO AUTO-MACRO 1:3.5 f=50mm	M50MC TYPE-1(C)	1/1
OLYMPUS OM-SYSTEM ZUIKO MC AUTO-MACRO 1:3.5 f=50mm	M50MC TYPE-2(MC)	
OLYMPUS OM-SYSTEM ZUIKO MC AUTO-MACRO 1:3.5 f=50mm	M50MC TYPE-3(NMC)	
OLYMPUS OPTICAL CO., LTD. TOKYO, JAPAN		

NOTE : WHEN ORDERING FOR SPARE PARTS, PLEASE CLARIFY A MODEL or HOUSE CODE, PARTS NUMBER AND QUANTITY.

M50MC　変更部品表　IMPROVED PARTS TABLE

〈1〉

OLD

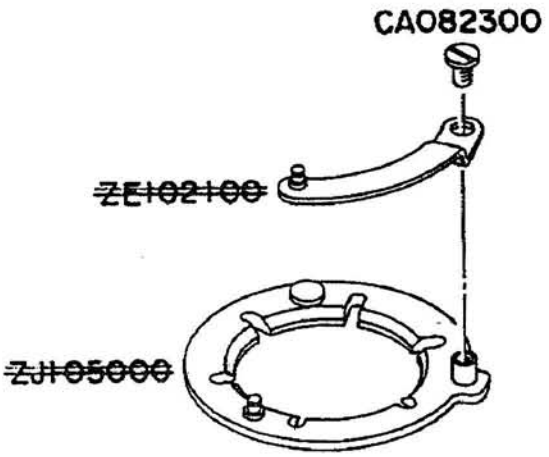

NEW

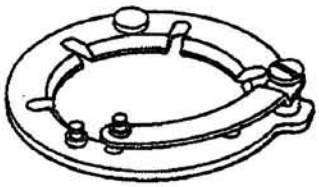

ZJ138500

〈2〉

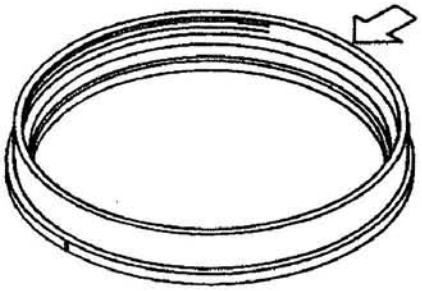

CA130700
[MF有]

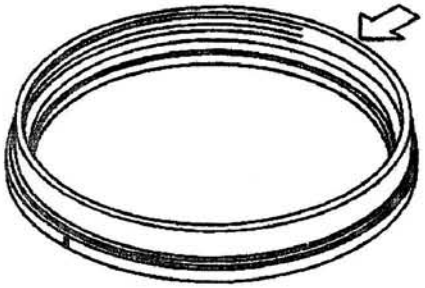

CA135100
[MFナシ]

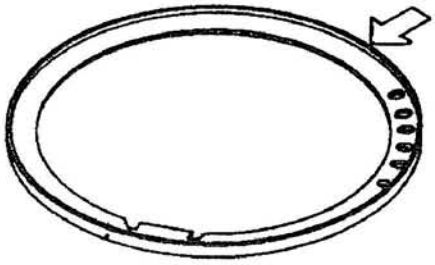

CA130900
[MF有]

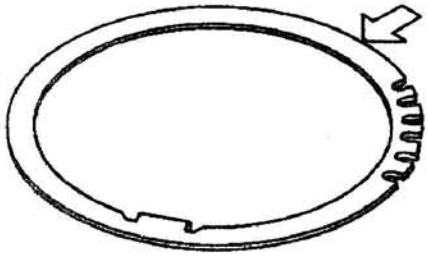

CA135300
[MFナシ]

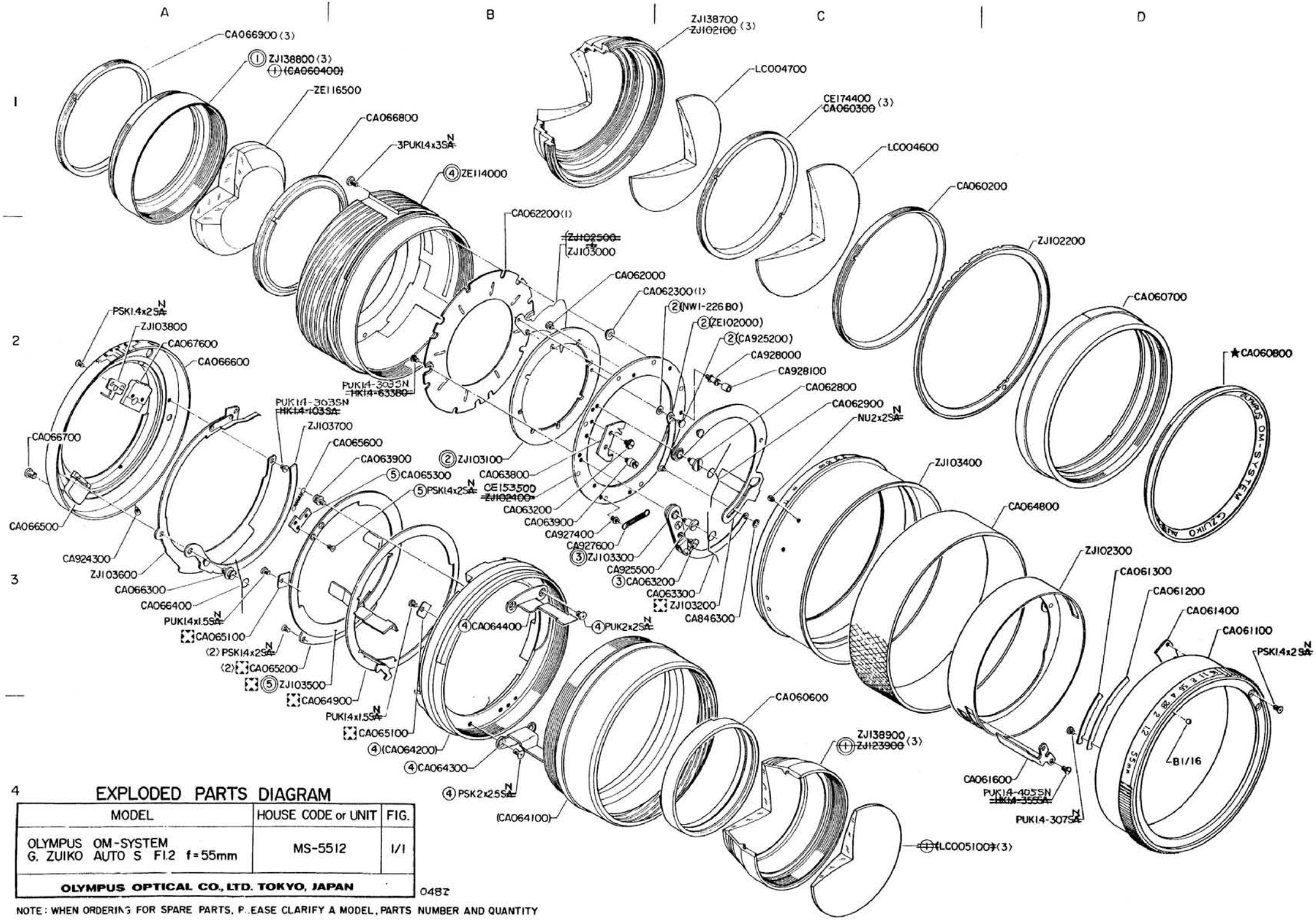

EXPLODED PARTS DIAGRAM

MODEL	HOUSE CODE or UNIT	FIG.
OLYMPUS OM-SYSTEM G. ZUIKO AUTO S F1.2 f=55mm	MS-5512	1/1
OLYMPUS OPTICAL CO., LTD. TOKYO, JAPAN		

0482

NOTE: WHEN ORDERING FOR SPARE PARTS, PLEASE CLARIFY A MODEL, PARTS NUMBER AND QUANTITY

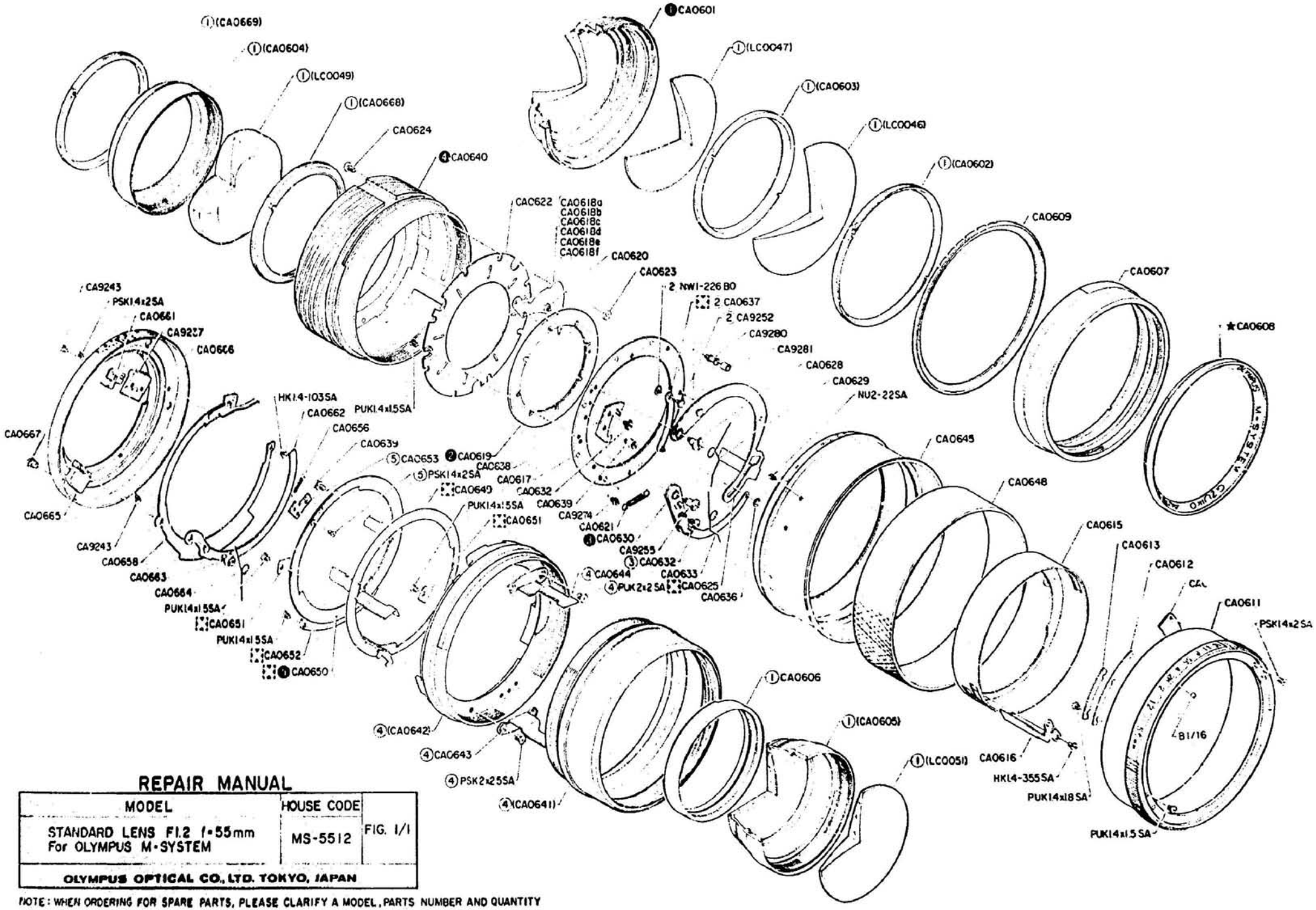

REPAIR MANUAL

MODEL	HOUSE CODE	
STANDARD LENS F1.2 f=55mm For OLYMPUS M-SYSTEM	MS-5512	FIG. 1/1
OLYMPUS OPTICAL CO., LTD. TOKYO, JAPAN		

NOTE: WHEN ORDERING FOR SPARE PARTS, PLEASE CLARIFY A MODEL, PARTS NUMBER AND QUANTITY

MS5512 変更部品表 IMPROVED PARTS TABLE

〈1〉

OLD

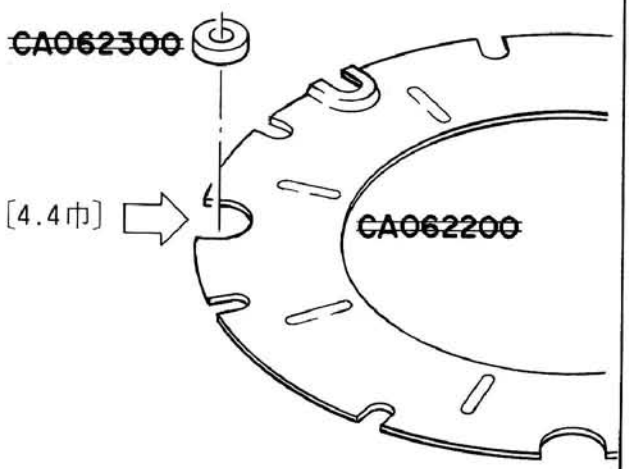

NEW

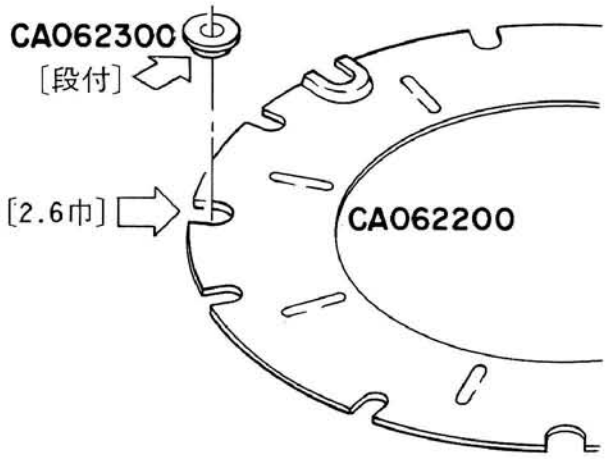

〈2〉

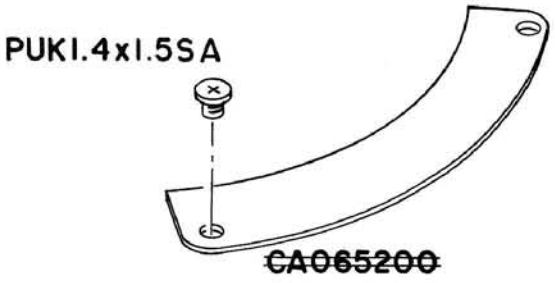

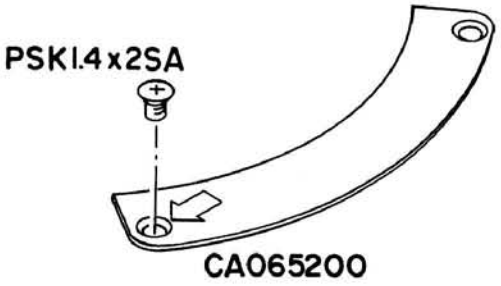

MS5512 変更部品表 IMPROVED PARTS TABLE

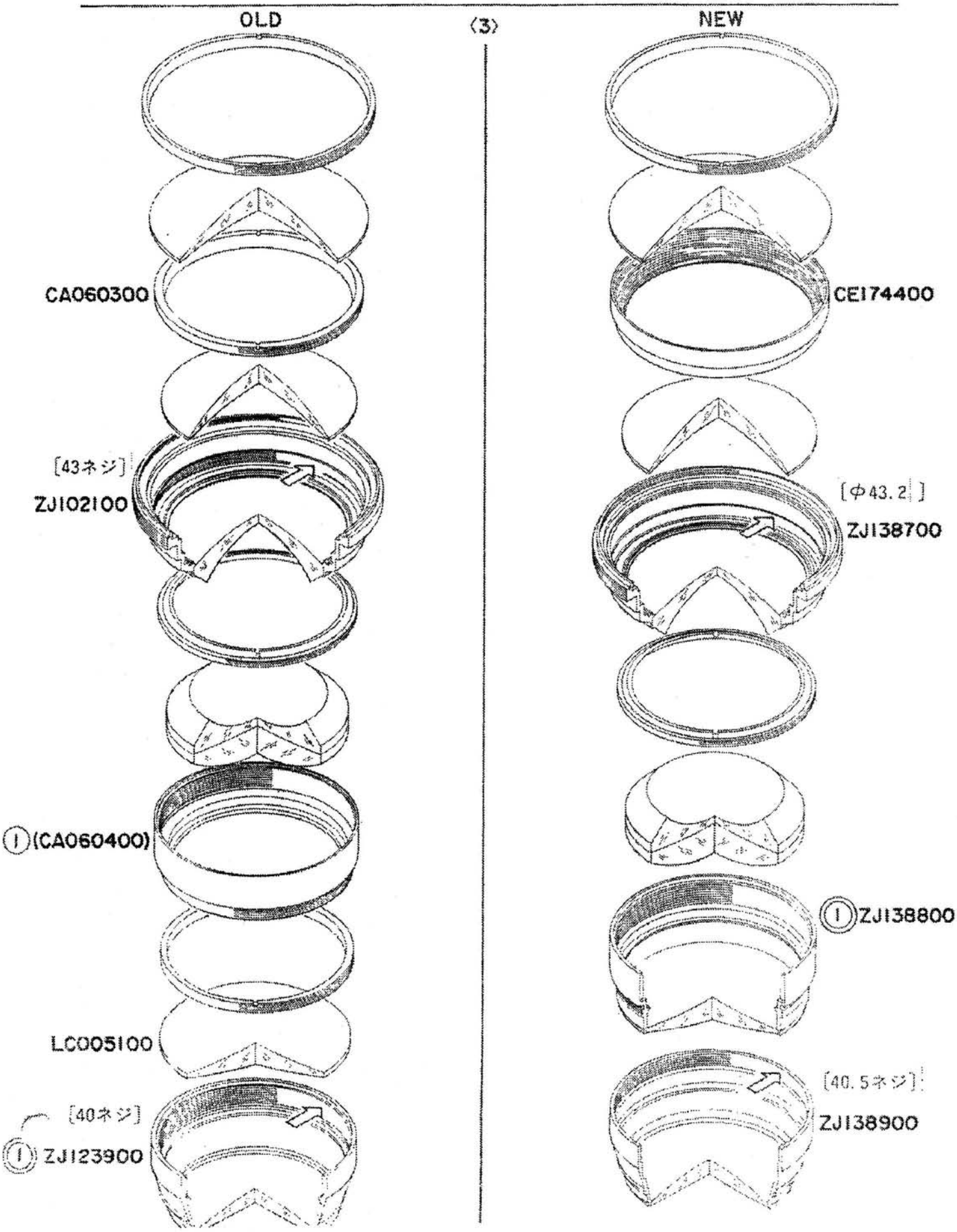

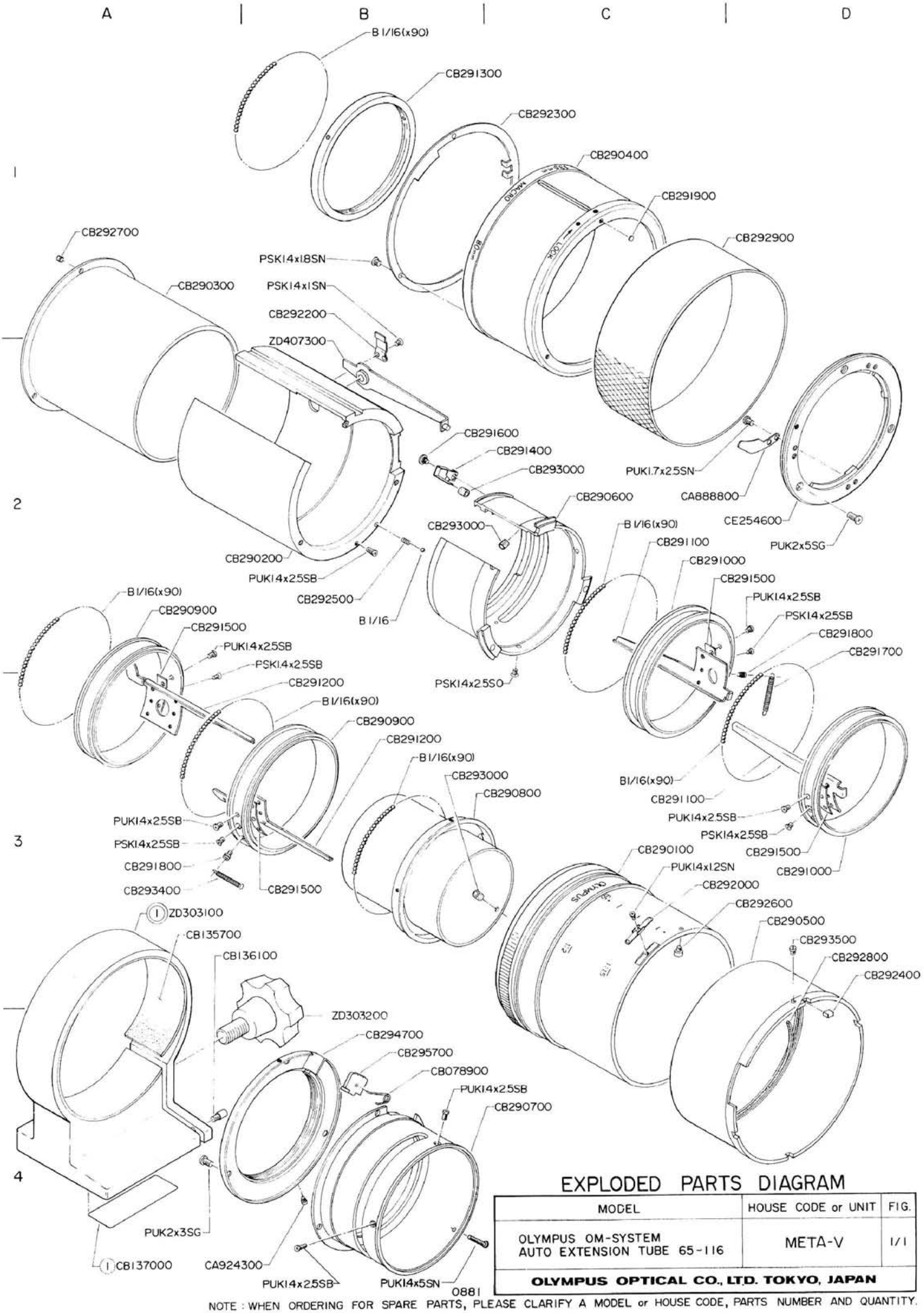

EXPLODED PARTS DIAGRAM

MODEL	HOUSE CODE or UNIT	FIG.
OLYMPUS OM-SYSTEM AUTO EXTENSION TUBE 65-116	META-V	1/1
OLYMPUS OPTICAL CO., LTD. TOKYO, JAPAN		

NOTE : WHEN ORDERING FOR SPARE PARTS, PLEASE CLARIFY A MODEL or HOUSE CODE, PARTS NUMBER AND QUANTITY.

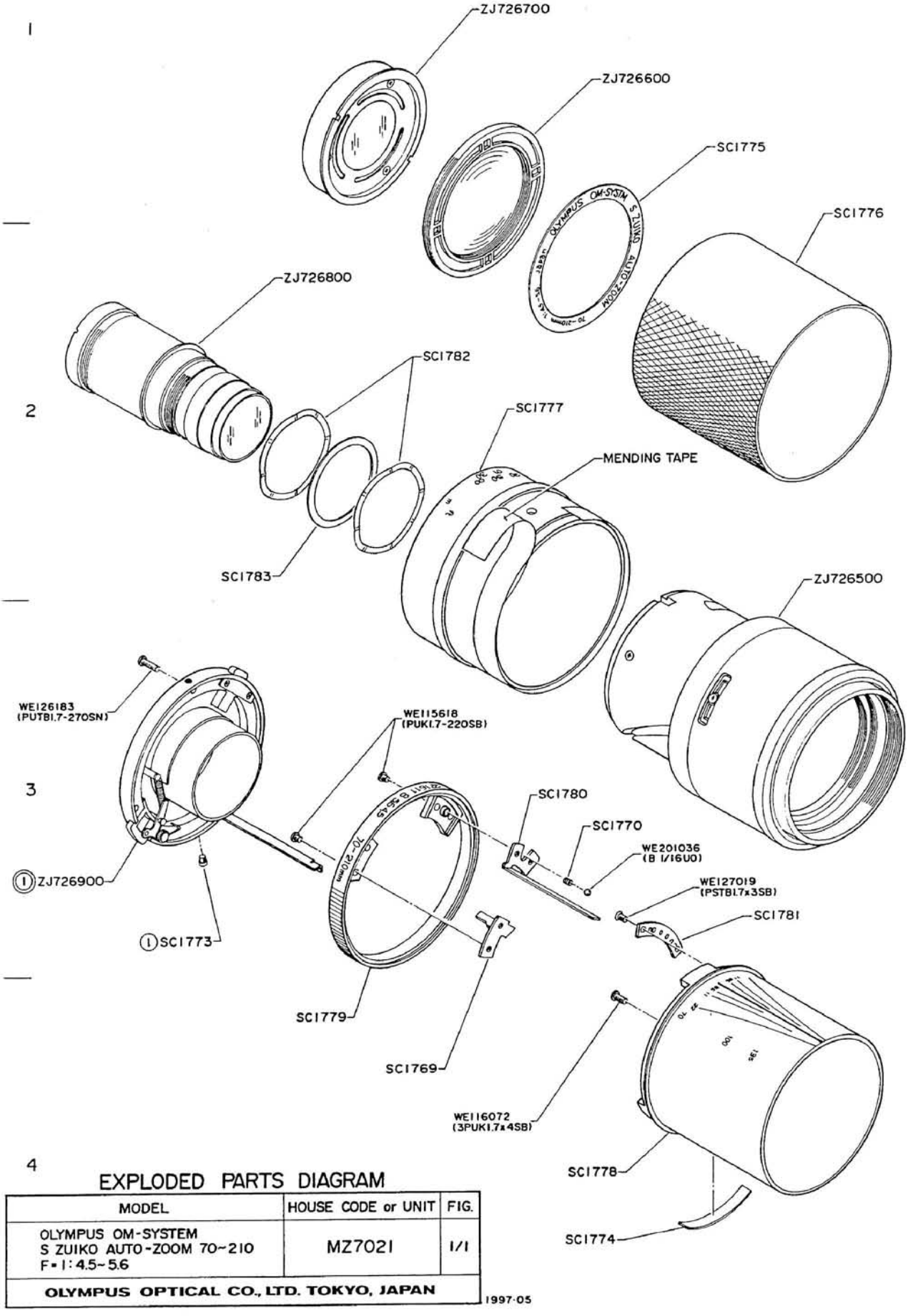

EXPLODED PARTS DIAGRAM

MODEL	HOUSE CODE or UNIT	FIG.
OLYMPUS OM-SYSTEM S ZUIKO AUTO-ZOOM 70~210 F=1:4.5~5.6	MZ7021	1/1
OLYMPUS OPTICAL CO., LTD. TOKYO, JAPAN		

1997-05

OLYMPUS
OM-SYSTEM S ZUIKO AUTO-ZOOM 70-210mm 1:4.5-5.6

MZ 7021

PARTS LIST

PARTS No.	NAME OF PARTS	NOTE
· SC1769	CONNECT LEVER	B-4
· SC1770	CLICK SPRING	C-3
· SC1774	NO. PLATE	C-4
· SC1775	NAME PLATE	C-1
· SC1776	RUBBER RING	D-1
· SC1777	FOCUS RING	C-2
· SC1778	INDICATOR RING	C-4
· SC1779	DIAPHRAGM RING	B-4
· SC1780	DIAPHRAGM ARM	C-3
· SC1781	CLICK PLATE	C-3
· SC1782	WAVE WASHER	B-2
· SC1783	MAIN WASHER	A-2
· SC1773	STOPPER SCREW	A-3
· ZJ726500	HELICOID Assy	D-2
· ZJ726600	1G LENS Assy	C-1
· ZJ726700	2G LENS Assy	B-1
· ZJ726800	3G LENS Assy	B-2
· ZJ726900	LENS MOUNT Assy	A-3
· WE115618	SCREW	
WE116072	SCREW	
WE126183	SCREW	
WE127019	SCREW	
WE201036	BALL	

PARTS No.	NAME OF PARTS	NOTE

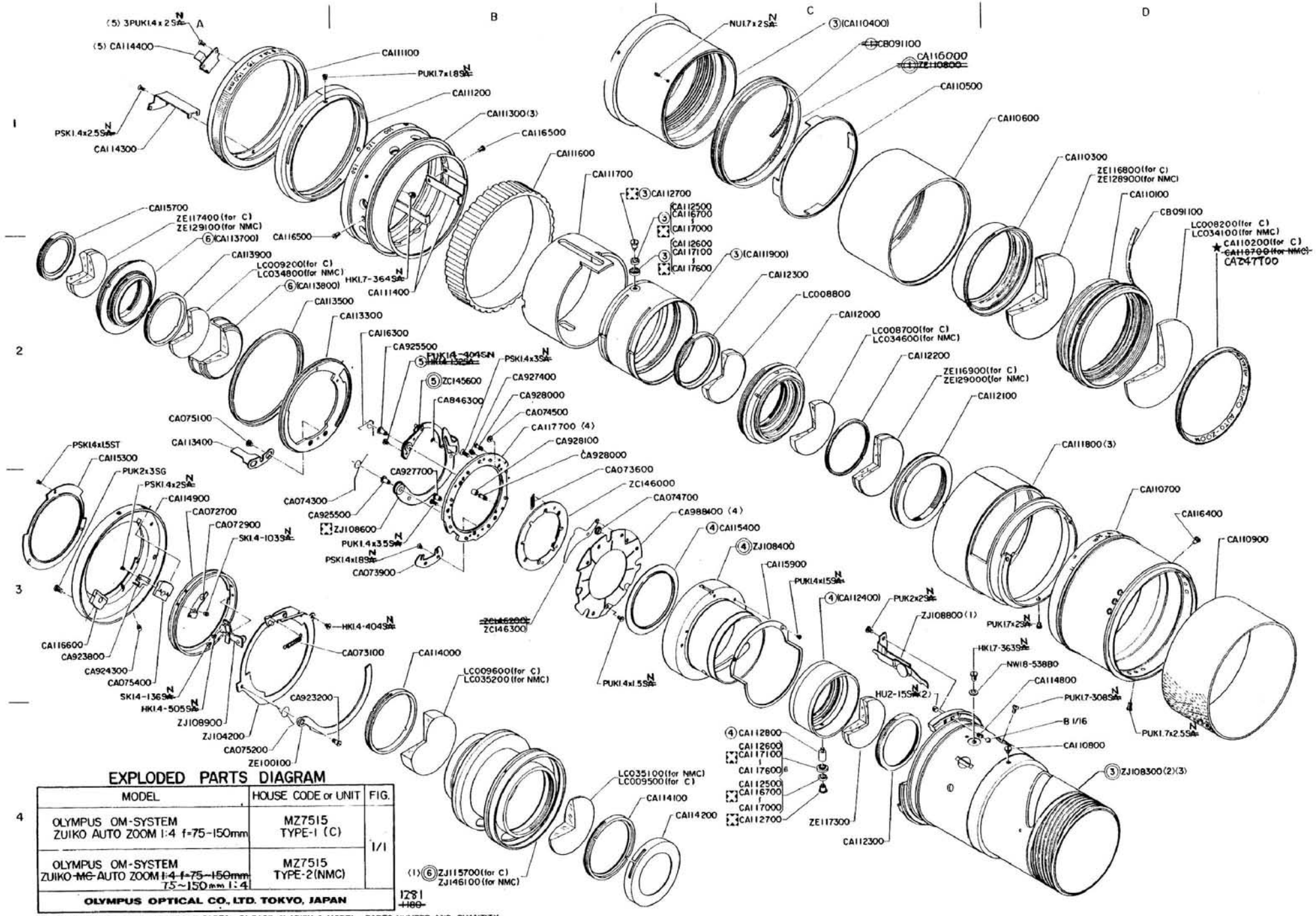

EXPLODED PARTS DIAGRAM

MODEL	HOUSE CODE or UNIT	FIG.
OLYMPUS OM-SYSTEM ZUIKO AUTO ZOOM 1:4 f=75-150mm	MZ7515 TYPE-1 (C)	1/1
OLYMPUS OM-SYSTEM ZUIKO ~~MC~~ AUTO ZOOM ~~1:4 f=75-150mm~~ 75~150mm 1:4	MZ7515 TYPE-2 (NMC)	
OLYMPUS OPTICAL CO., LTD. TOKYO, JAPAN		

NOTE: WHEN ORDERING FOR SPARE PARTS, PLEASE CLARIFY A MODEL, PARTS NUMBER AND QUANTITY.

〈1〉

OLD

~~CA113600~~

3

~~CA114600~~

NEW

ZJ115700

4.5

ZJ108800

〈2〉

OLD

~~CA111000~~

〔1.7T〕

~~CA115800~~

〔1.7ネジ〕

NEW

ZJ108300

〔2T〕

HU2-15SA

〔2ネジ〕

〈3〉

OLD

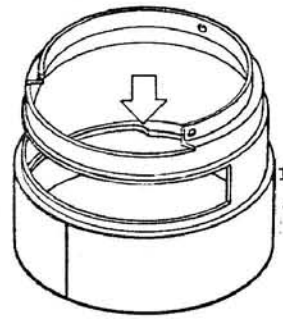

~~CA111800~~
[カット角度93°]

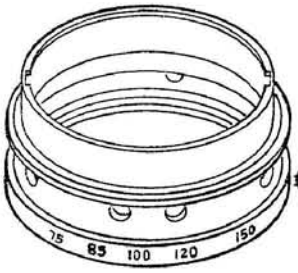

~~CA111300~~

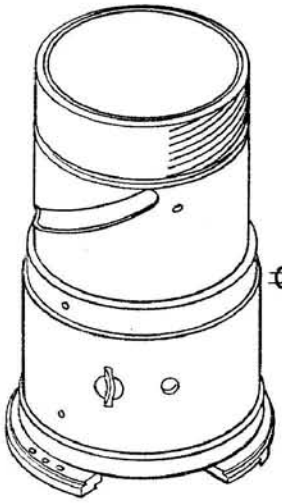

~~CA111000~~

NEW

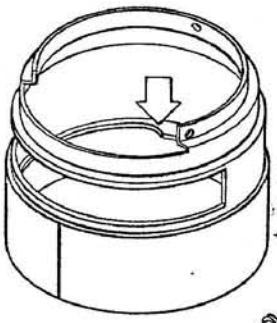

CA111800
[カット角度100°]

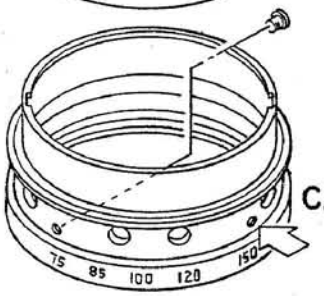

CA111300

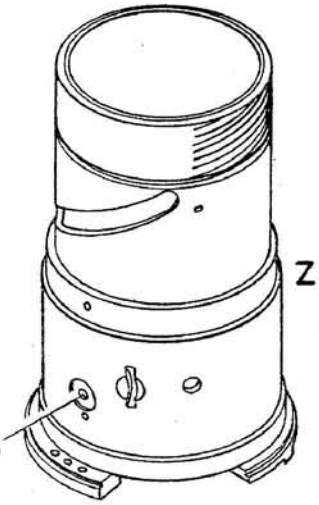

ZJ108300

NW1.8-538BO

HK1.7-363SN

〈5〉

PSK1.4x2.5SA

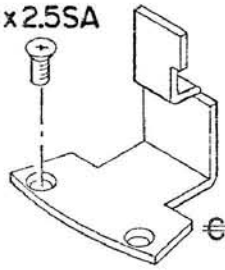

~~CA114400~~

3PUK1.4x2SA

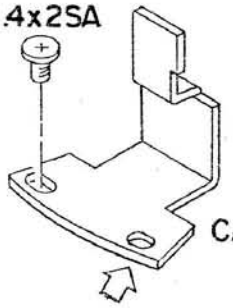

CA114400

〈4〉

OLD

~~CA074000~~

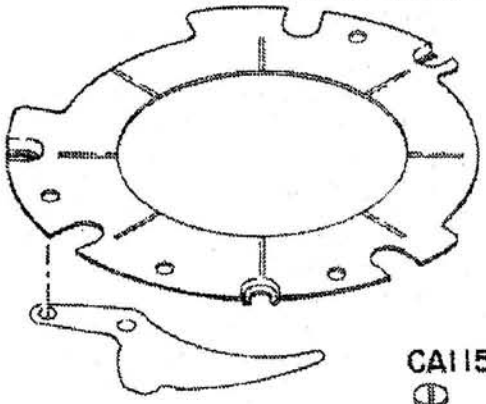

CA115500

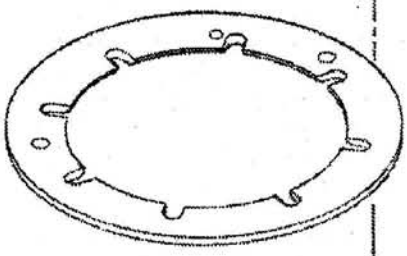

~~ZJ108500~~

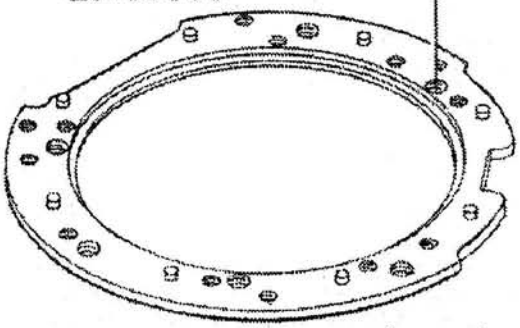

[ハネピンカシメ]

NEW

CA988100

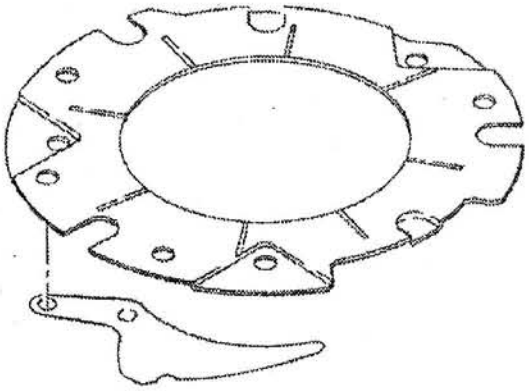

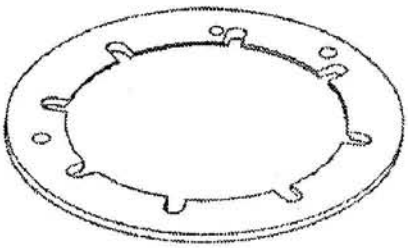

CA117700

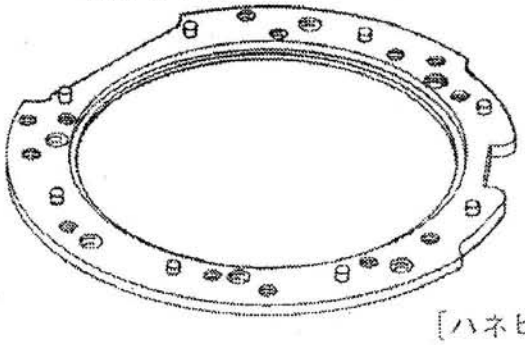

[ハネピン打出し]

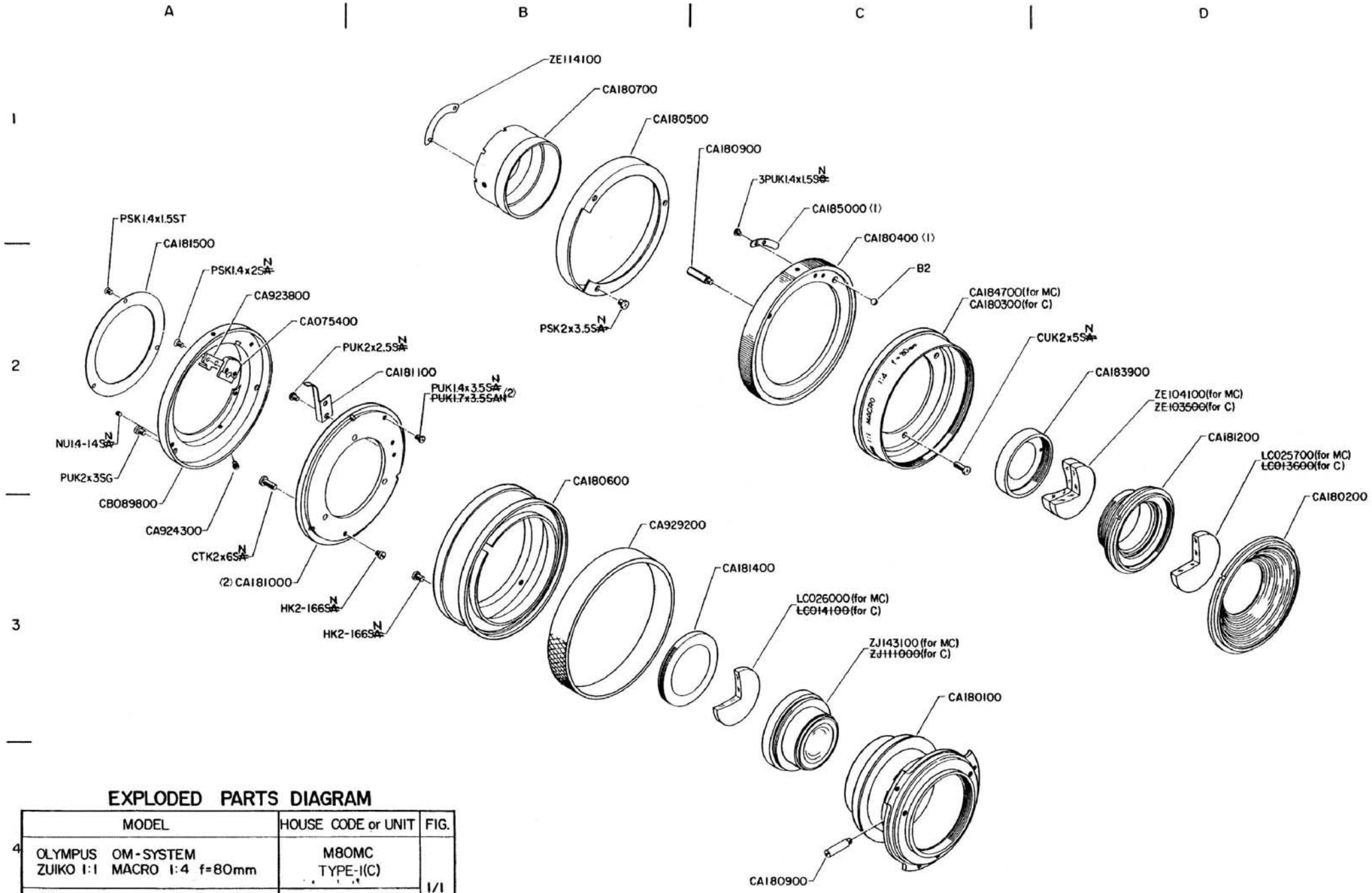

EXPLODED PARTS DIAGRAM

MODEL	HOUSE CODE or UNIT	FIG.
OLYMPUS OM-SYSTEM ZUIKO 1:1 MACRO 1:4 f=80mm	M80MC TYPE-1(C)	1/1
OLYMPUS OM-SYSTEM ZUIKO MC 1:1 MACRO 1:4 f=80mm	M80MC TYPE-2(MC)	
OLYMPUS OPTICAL CO., LTD. TOKYO, JAPAN		

1281

NOTE: WHEN ORDERING FOR SPARE PARTS, PLEASE CLARIFY A MODEL or HOUSE CODE, PARTS NUMBER AND QUANTITY.

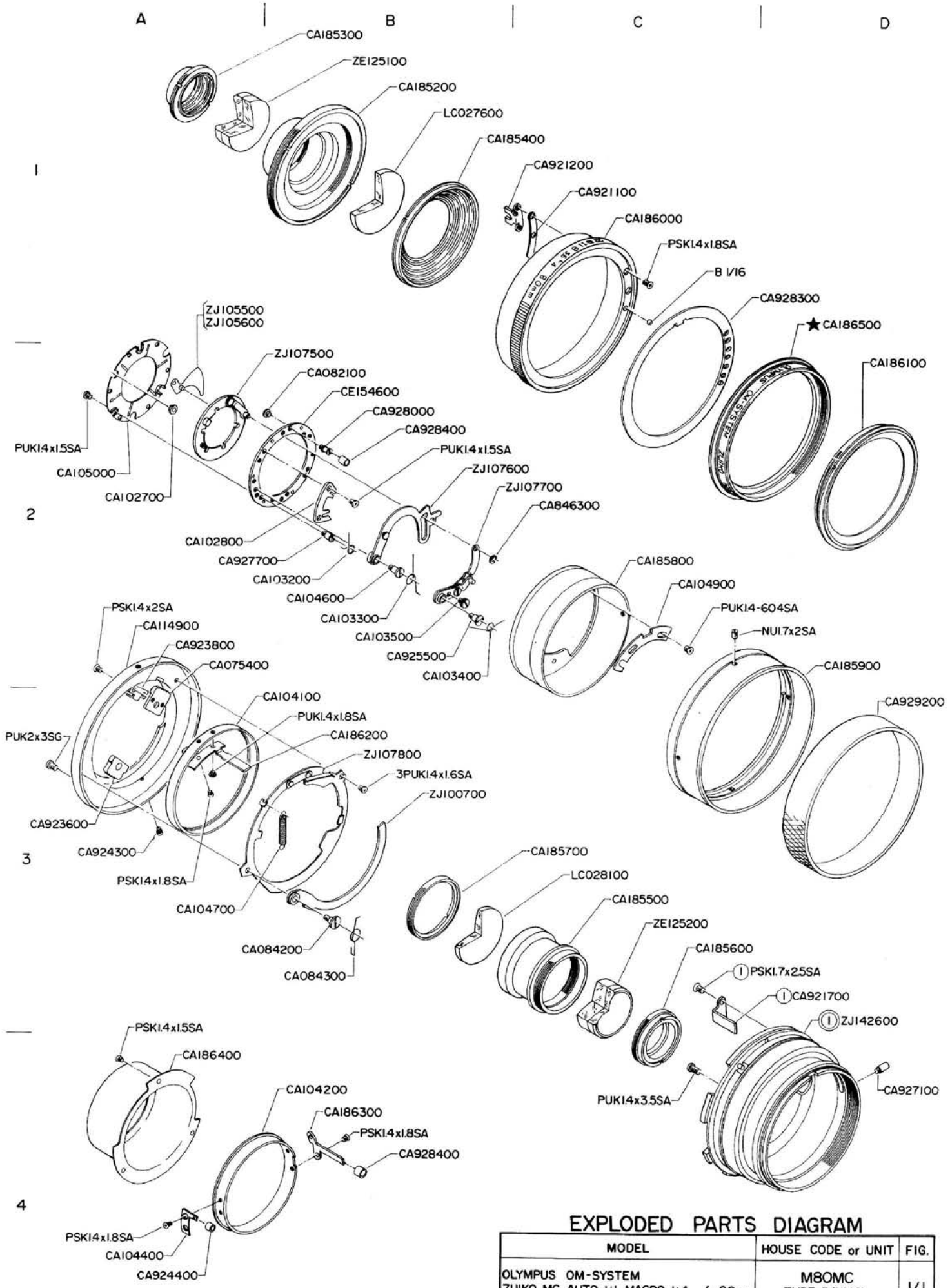

EXPLODED PARTS DIAGRAM

MODEL	HOUSE CODE or UNIT	FIG.
OLYMPUS OM-SYSTEM ZUIKO MC AUTO 1:1 MACRO 1:4 f=80mm	M80MC TYPE-3 (NMC)	1/1
OLYMPUS OPTICAL CO., LTD. TOKYO, JAPAN		

NOTE : WHEN ORDERING FOR SPARE PARTS, PLEASE CLARIFY A MODEL or HOUSE CODE, PARTS NUMBER AND QUANTITY.

〈1〉

OLD

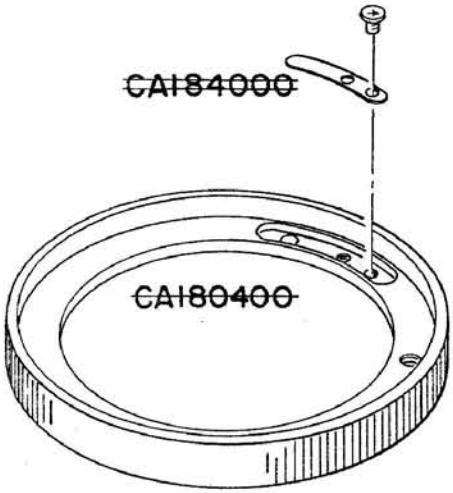

NEW

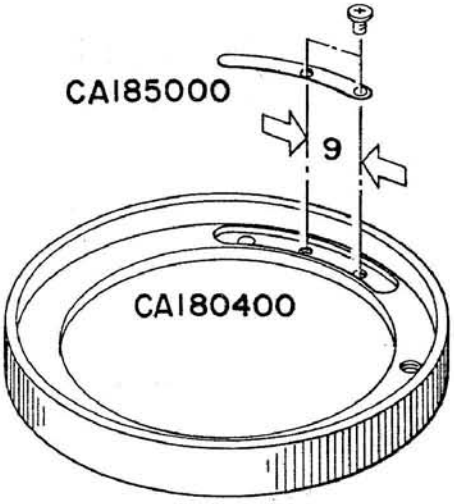

〈2〉

PUKI.7x3.5SA

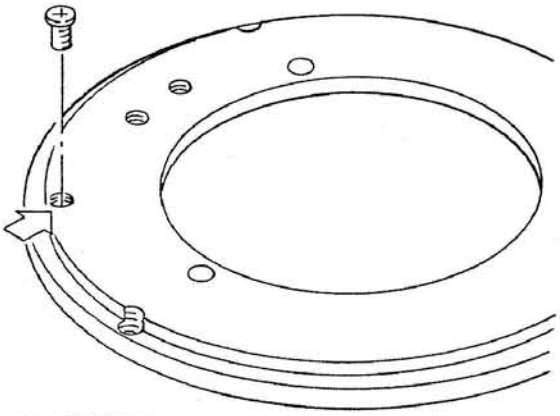

~~CA181000~~
[1.7ネジ穴]

PUKI.4x3.5SA

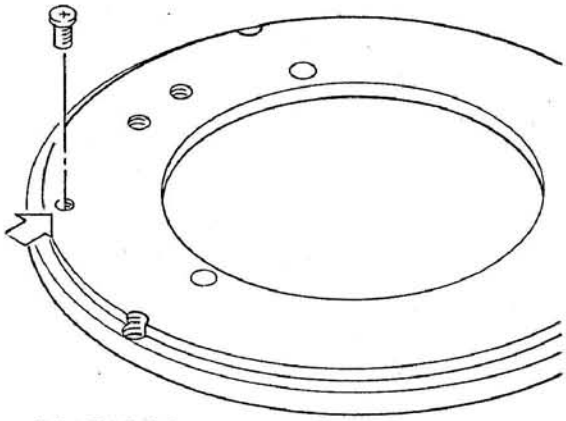

CA181000
[1.4ネジ穴]

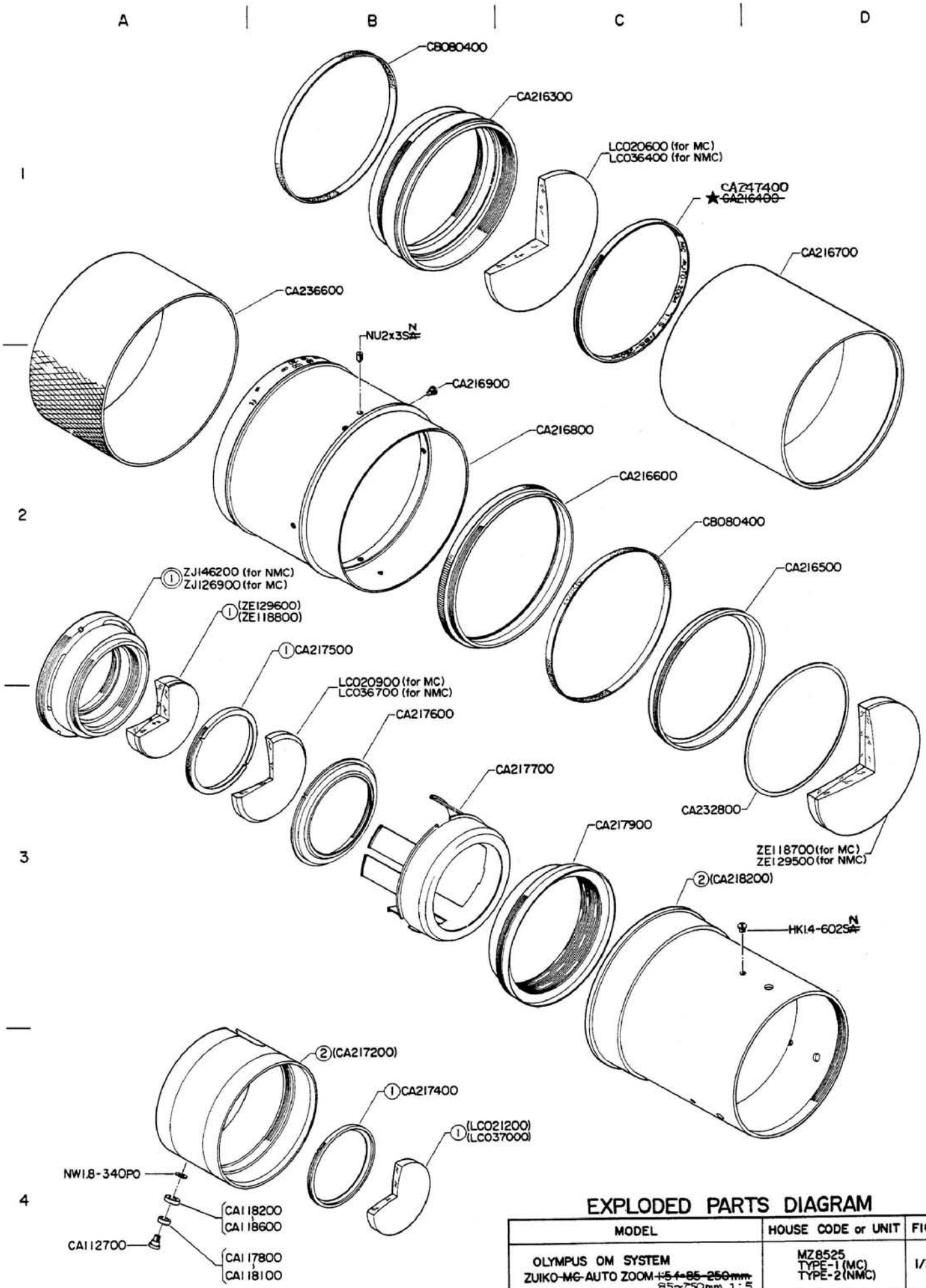

EXPLODED PARTS DIAGRAM

MODEL	HOUSE CODE or UNIT	FIG.
OLYMPUS OM SYSTEM ZUIKO ~~MC~~ AUTO ZOOM ~~1:5 f=85-250mm~~ 85~250mm 1:5	MZ8525 TYPE-1 (MC) TYPE-2 (NMC)	1/3
OLYMPUS OPTICAL CO., LTD. TOKYO, JAPAN		

1281
~~1180~~

NOTE : WHEN ORDERING FOR SPARE PARTS, PLEASE CLARIFY A MODEL or HOUSE CODE, PARTS NUMBER AND QUANTITY.

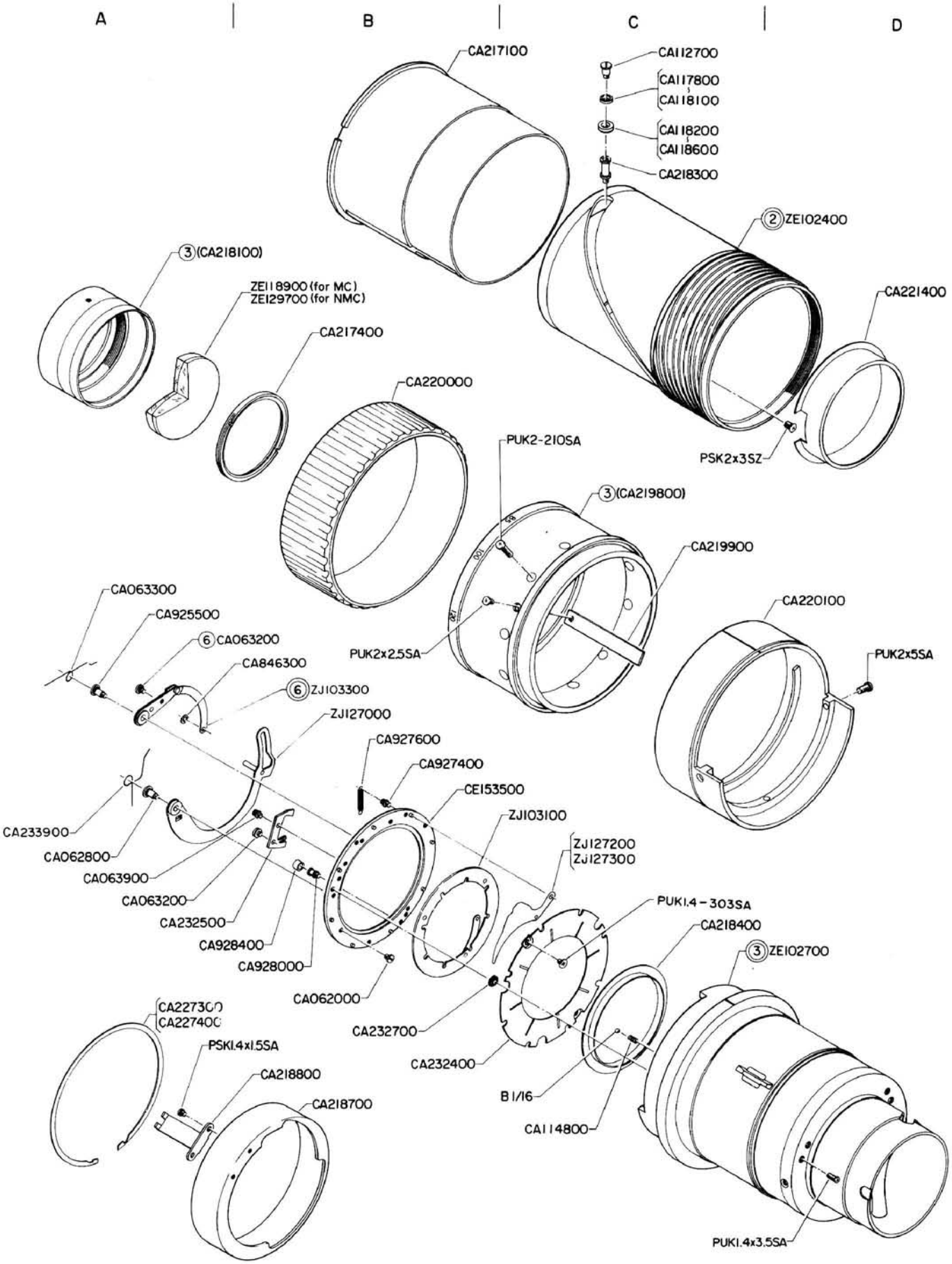

EXPLODED PARTS DIAGRAM

MODEL	HOUSE CODE or UNIT	FIG.
OLYMPUS OM-SYSTEM ZUIKO MC AUTO ZOOM 1:5 f=85-250mm	MZ8525 TYPE-1 (MC) TYPE-2 (NMC)	2/3
OLYMPUS OPTICAL CO., LTD. TOKYO, JAPAN		

1180

NOTE : WHEN ORDERING FOR SPARE PARTS, PLEASE CLARIFY A MODEL or HOUSE CODE, PARTS NUMBER AND QUANTITY.

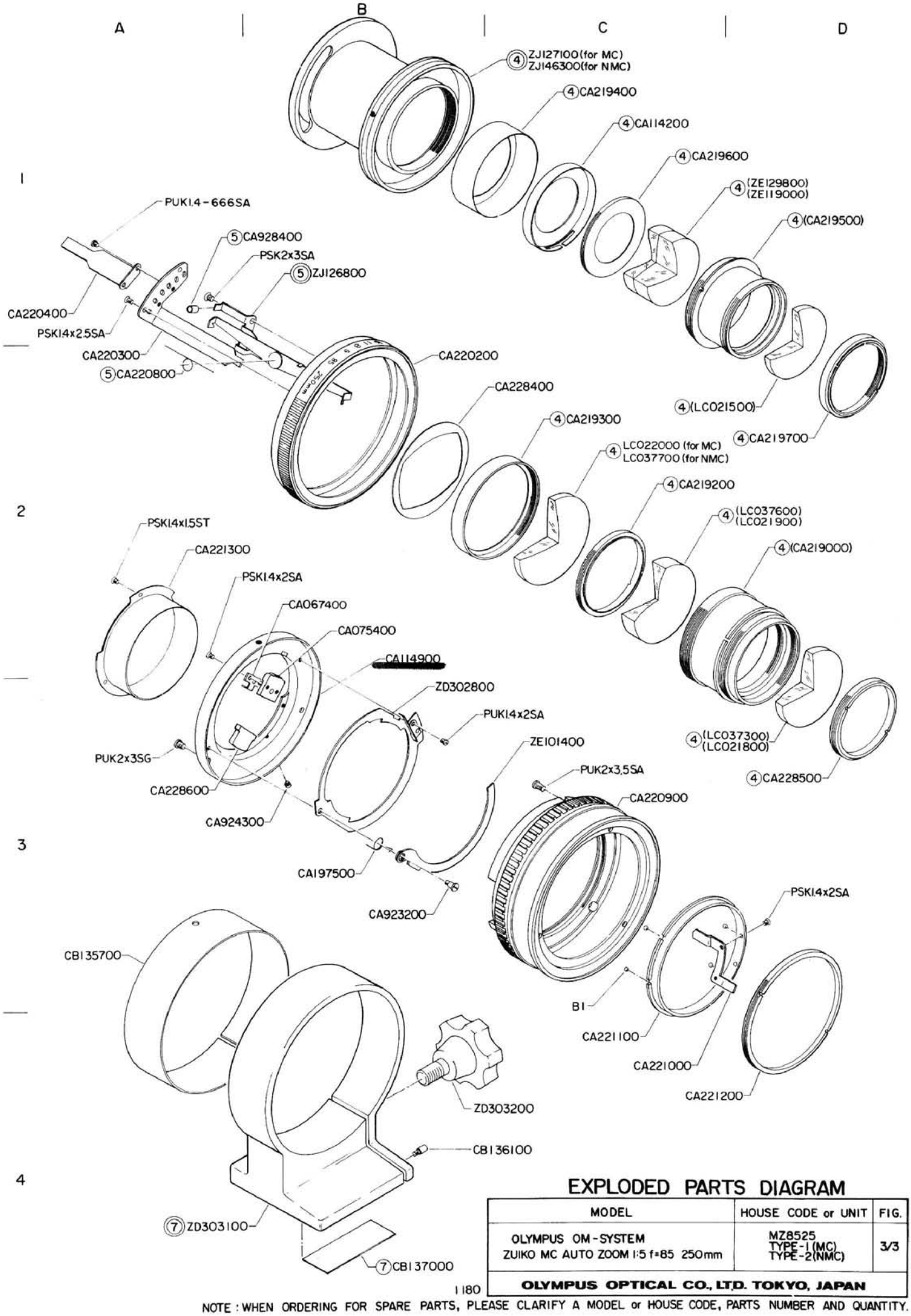

EXPLODED PARTS DIAGRAM

MODEL	HOUSE CODE or UNIT	FIG.
OLYMPUS OM-SYSTEM ZUIKO MC AUTO ZOOM 1:5 f=85 250mm	MZ8525 TYPE-1 (MC) TYPE-2 (NMC)	3/3
OLYMPUS OPTICAL CO., LTD. TOKYO, JAPAN		

NOTE : WHEN ORDERING FOR SPARE PARTS, PLEASE CLARIFY A MODEL or HOUSE CODE, PARTS NUMBER AND QUANTITY.

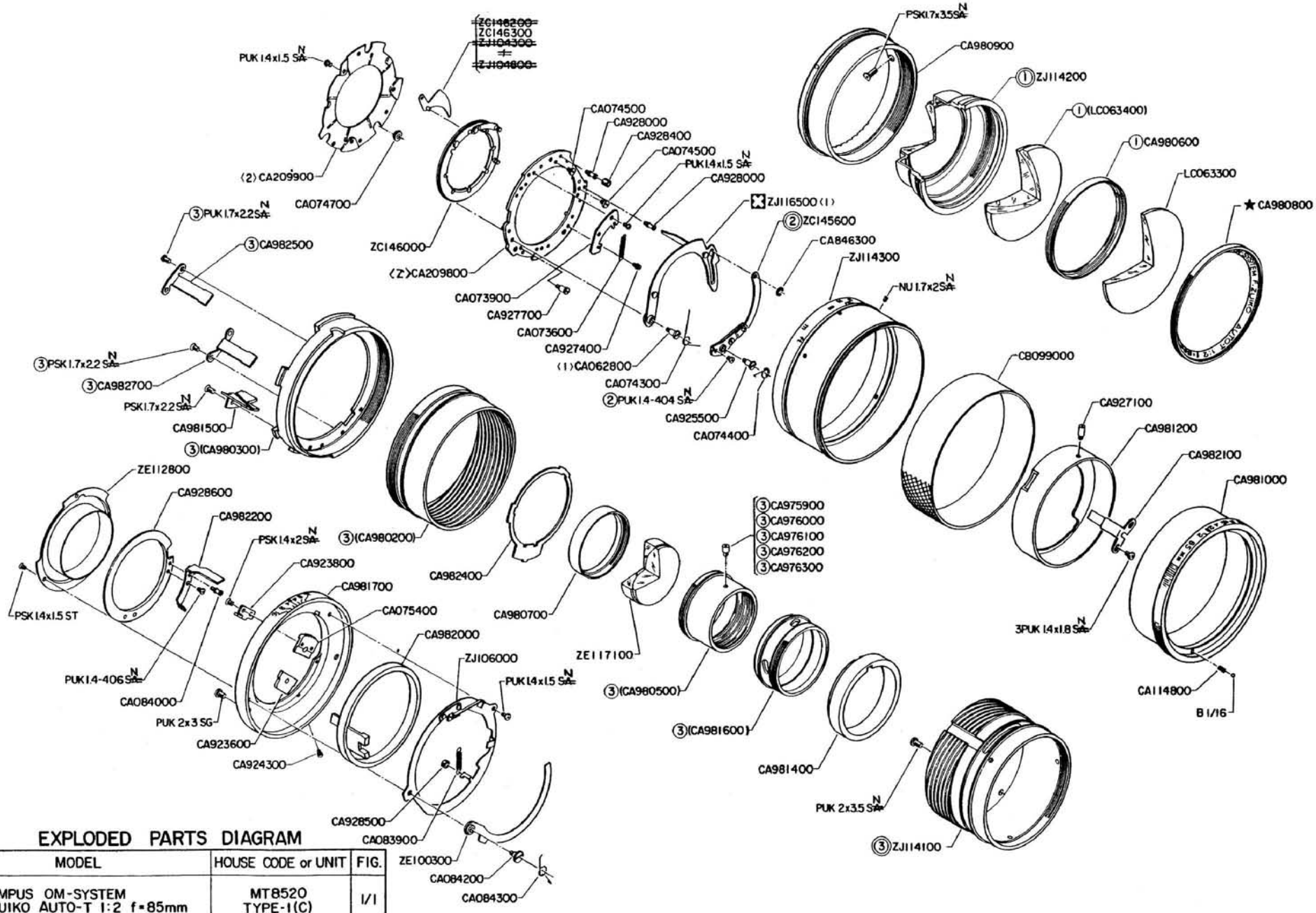

EXPLODED PARTS DIAGRAM

MODEL	HOUSE CODE or UNIT	FIG.
OLYMPUS OM-SYSTEM F. ZUIKO AUTO-T 1:2 f=85mm	MT8520 TYPE-1(C)	1/1
OLYMPUS OPTICAL CO., LTD. TOKYO, JAPAN		

1281
-0481-

NOTE: WHEN ORDERING FOR SPARE PARTS, PLEASE CLARIFY A MODEL, PARTS NUMBER AND QUANTITY.

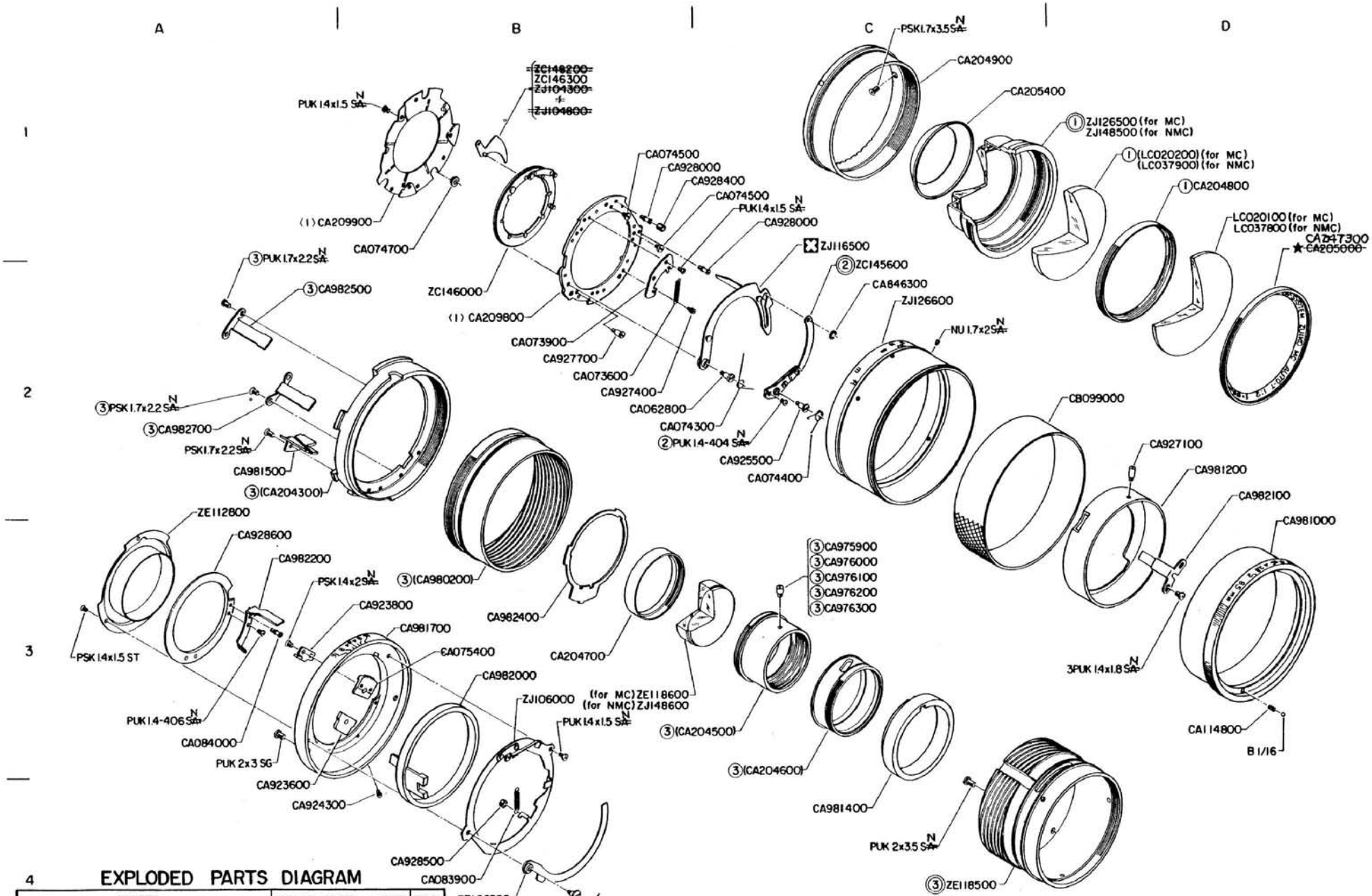

EXPLODED PARTS DIAGRAM

MODEL	HOUSE CODE or UNIT	FIG.
OLYMPUS OM-SYSTEM ZUIKO ~~MC~~ AUTO-T ~~1:2 f=85mm~~ 85mm 1:2	MT8520 TYPE-2 (MC) TYPE-3 (NMC)	1/1
OLYMPUS OPTICAL CO., LTD. TOKYO, JAPAN		

1281
~~1481~~

NOTE: WHEN ORDERING FOR SPARE PARTS, PLEASE CLARIFY A MODEL, PARTS NUMBER AND QUANTITY.

〈1〉

OLD

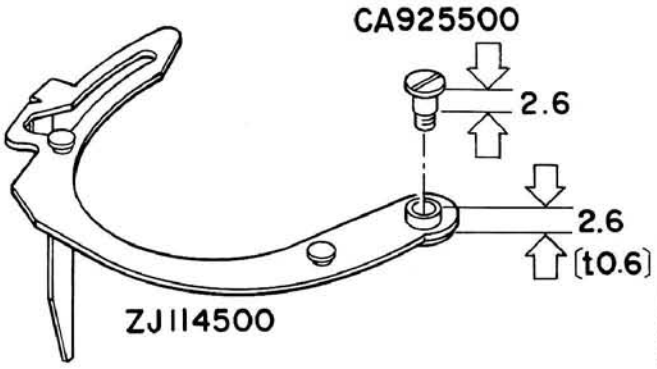

NEW

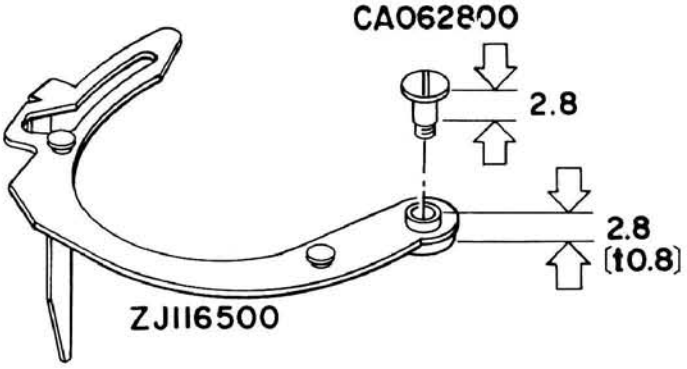

MT8520-3変更部品表　IMPROVED PARTS TABLE

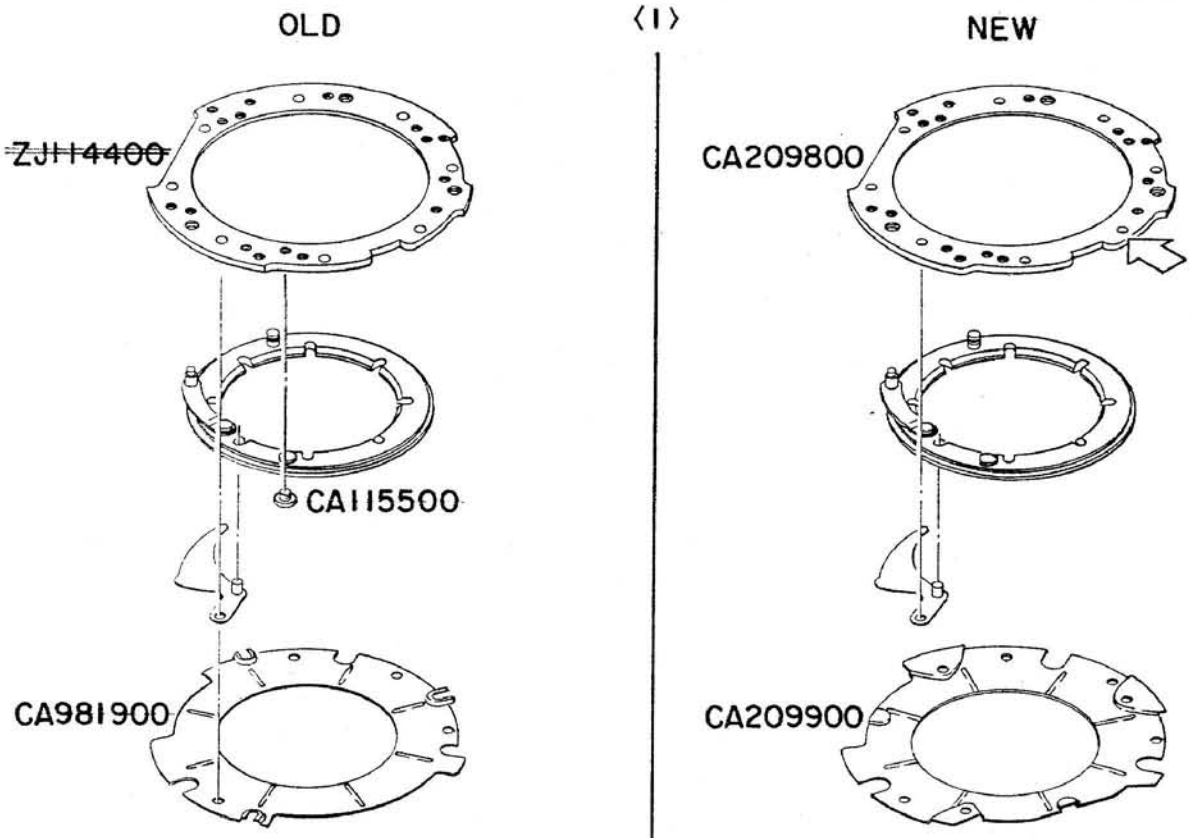

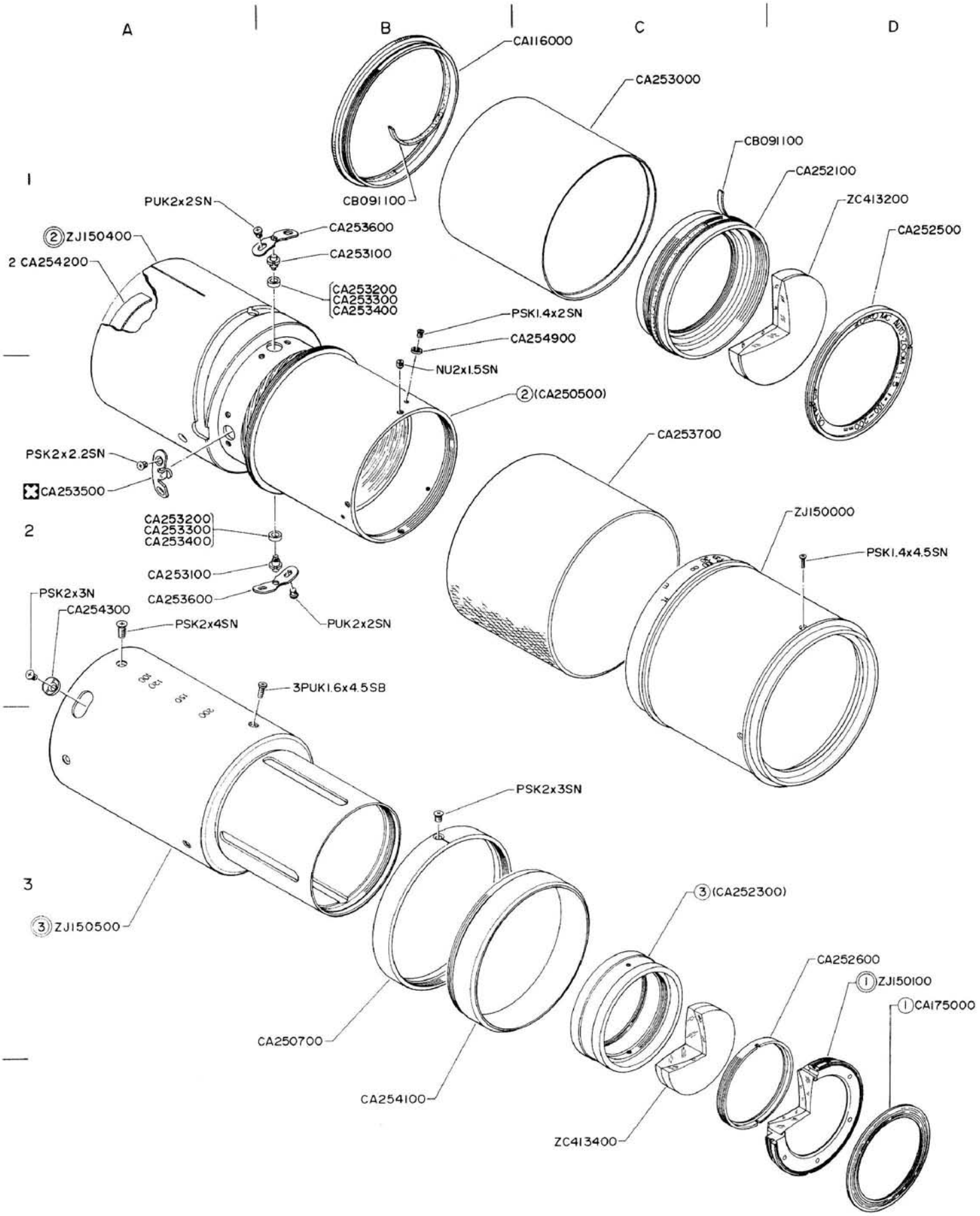

EXPLODED PARTS DIAGRAM

MODEL	HOUSE CODE or UNIT	FIG.
OLYMPUS OM-SYSTEM S ZUIKO MC AUTO-ZOOM F5 f=100 200mm	MZ1020S	1/2
OLYMPUS OPTICAL CO., LTD. TOKYO, JAPAN		

0981

NOTE : WHEN ORDERING FOR SPARE PARTS, PLEASE CLARIFY A MODEL or HOUSE CODE, PARTS NUMBER AND QUANTITY.

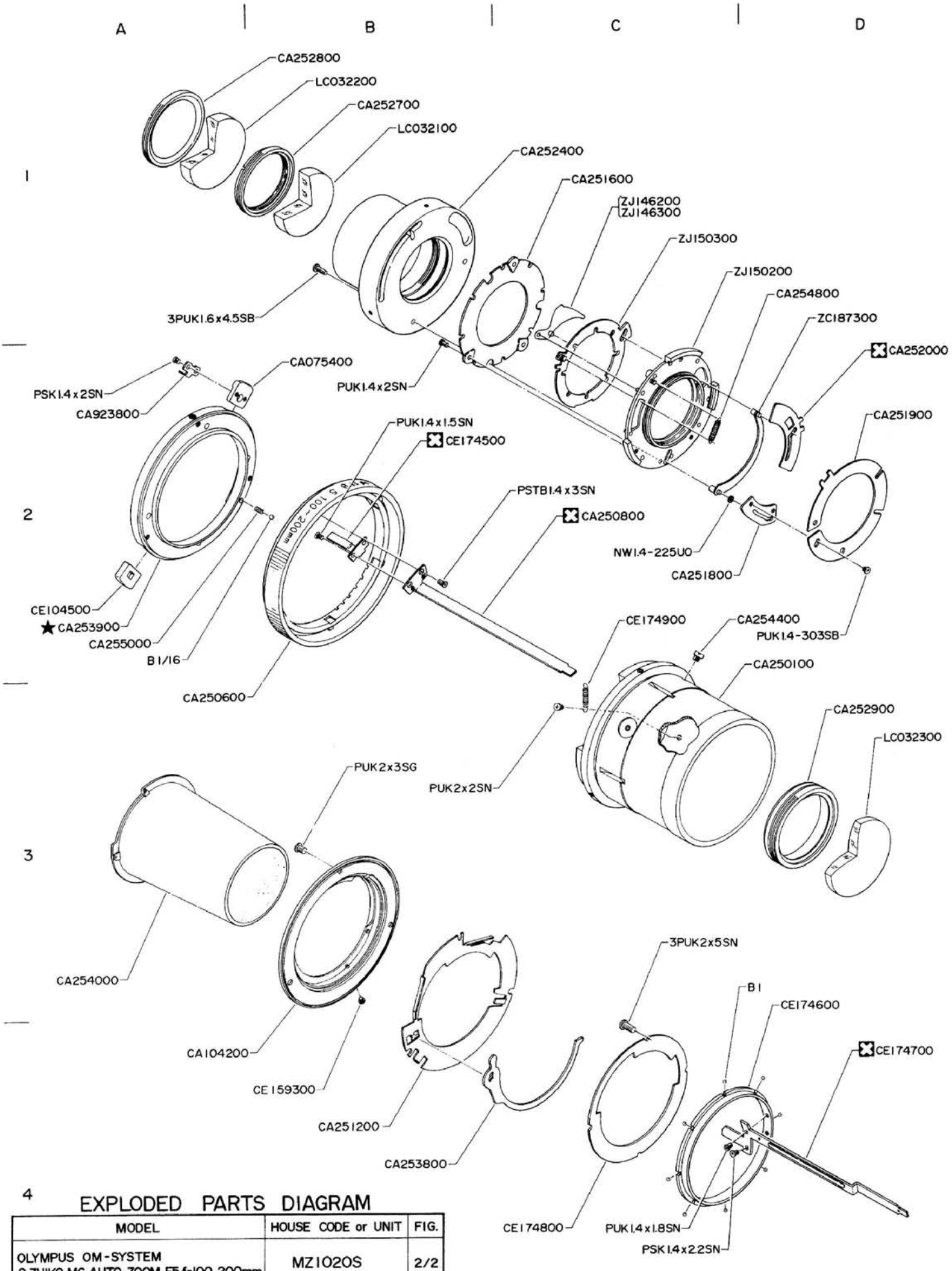

EXPLODED PARTS DIAGRAM

MODEL	HOUSE CODE or UNIT	FIG.
OLYMPUS OM-SYSTEM S ZUIKO MC AUTO-ZOOM F5 f=100 200mm	MZ1020S	2/2
OLYMPUS OPTICAL CO., LTD. TOKYO, JAPAN		

0981

NOTE : WHEN ORDERING FOR SPARE PARTS, PLEASE CLARIFY A MODEL or HOUSE CODE, PARTS NUMBER AND QUANTITY.

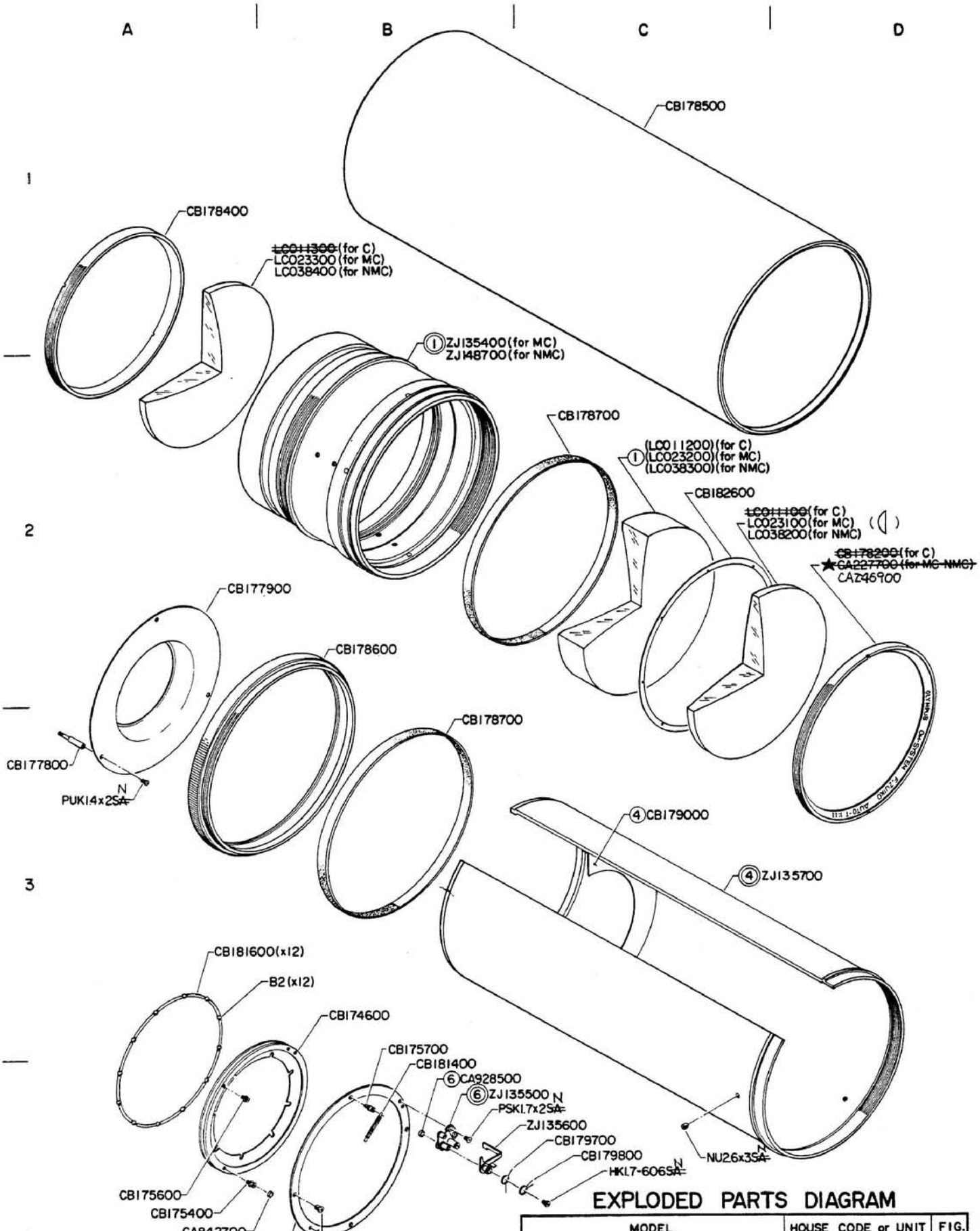

EXPLODED PARTS DIAGRAM

MODEL	HOUSE CODE or UNIT	FIG.
OLYMPUS OM-SYSTEM F. ZUIKO AUTO-T 1:11 f=1000 mm	MT1011 TYPE-1 (C)	1/3
OLYMPUS OM-SYSTEM ZUIKO ~~MC~~ AUTO-T ~~1:11 f=1000mm~~ 1000mm 1:11	MT1011 TYPE-2 (MC) TYPE-3 (NMC)	
0482 ~~0481~~	OLYMPUS OPTICAL CO., LTD. TOKYO, JAPAN	

NOTE: WHEN ORDERING FOR SPARE PARTS, PLEASE CLARIFY A MODEL, PARTS NUMBER AND QUANTITY.

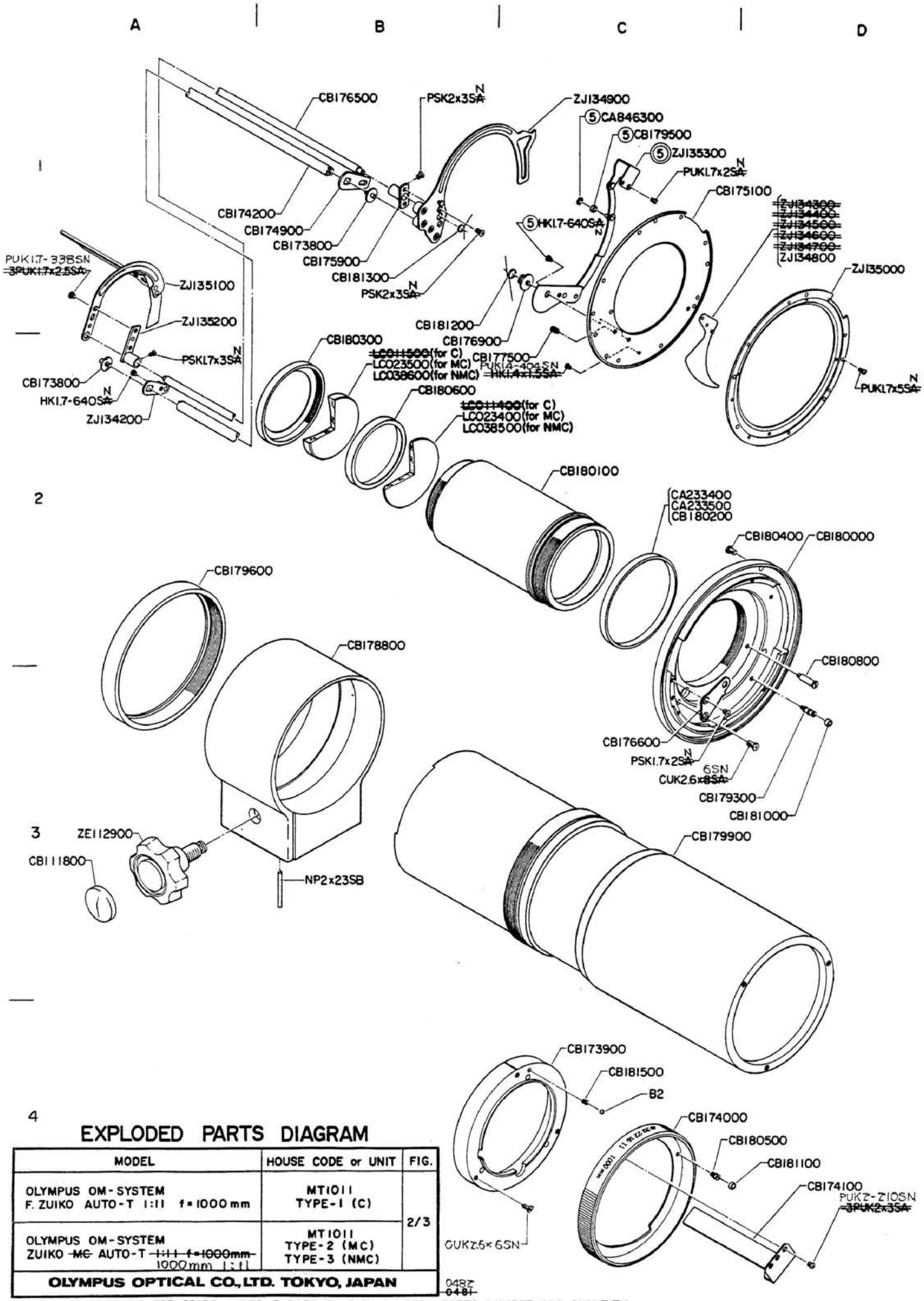

EXPLODED PARTS DIAGRAM

MODEL	HOUSE CODE or UNIT	FIG.
OLYMPUS OM-SYSTEM F. ZUIKO AUTO-T 1:11 f=1000mm	MT1011 TYPE-1 (C)	2/3
OLYMPUS OM-SYSTEM ZUIKO ~~MC~~ AUTO-T ~~1:11 f=1000mm~~ 1000mm 1:11	MT1011 TYPE-2 (MC) TYPE-3 (NMC)	
OLYMPUS OPTICAL CO., LTD. TOKYO, JAPAN		

0482
~~0481~~

NOTE: WHEN ORDERING FOR SPARE PARTS, PLEASE CLARIFY A MODEL, PARTS NUMBER AND QUANTITY.

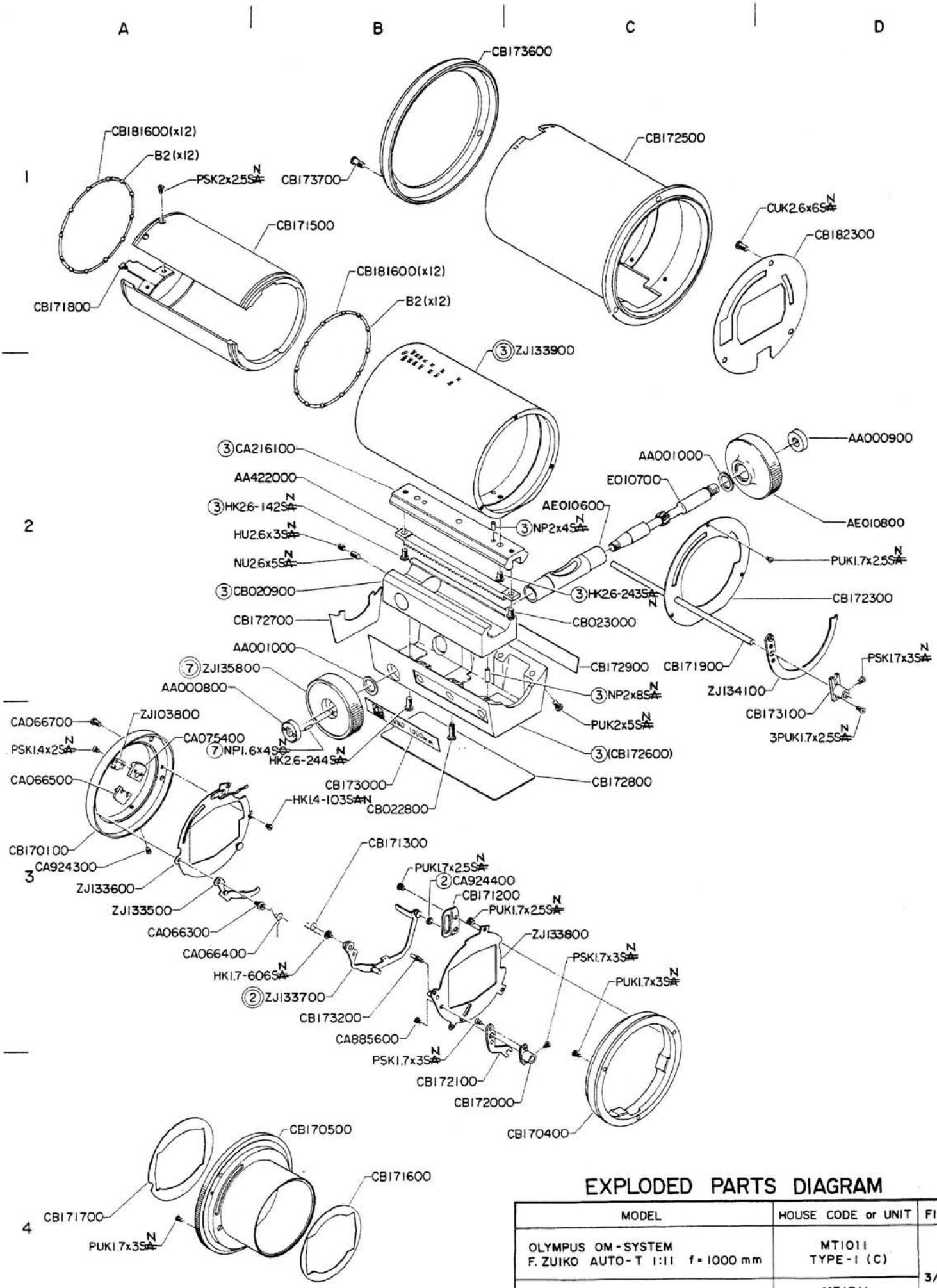

EXPLODED PARTS DIAGRAM

MODEL	HOUSE CODE or UNIT	FIG.
OLYMPUS OM-SYSTEM F. ZUIKO AUTO-T 1:11 f=1000 mm	MT1011 TYPE-1 (C)	3/3
OLYMPUS OM-SYSTEM ZUIKO ~~MC~~ AUTO-T ~~1:11 f=1000mm~~ 1000mm 1:11	MT1011 TYPE-2 (MC) TYPE-3 (NMC)	
	OLYMPUS OPTICAL CO., LTD. TOKYO, JAPAN	

1281
~~0481~~

NOTE: WHEN ORDERING FOR SPARE PARTS, PLEASE CLARIFY A MODEL, PARTS NUMBER AND QUANTITY.

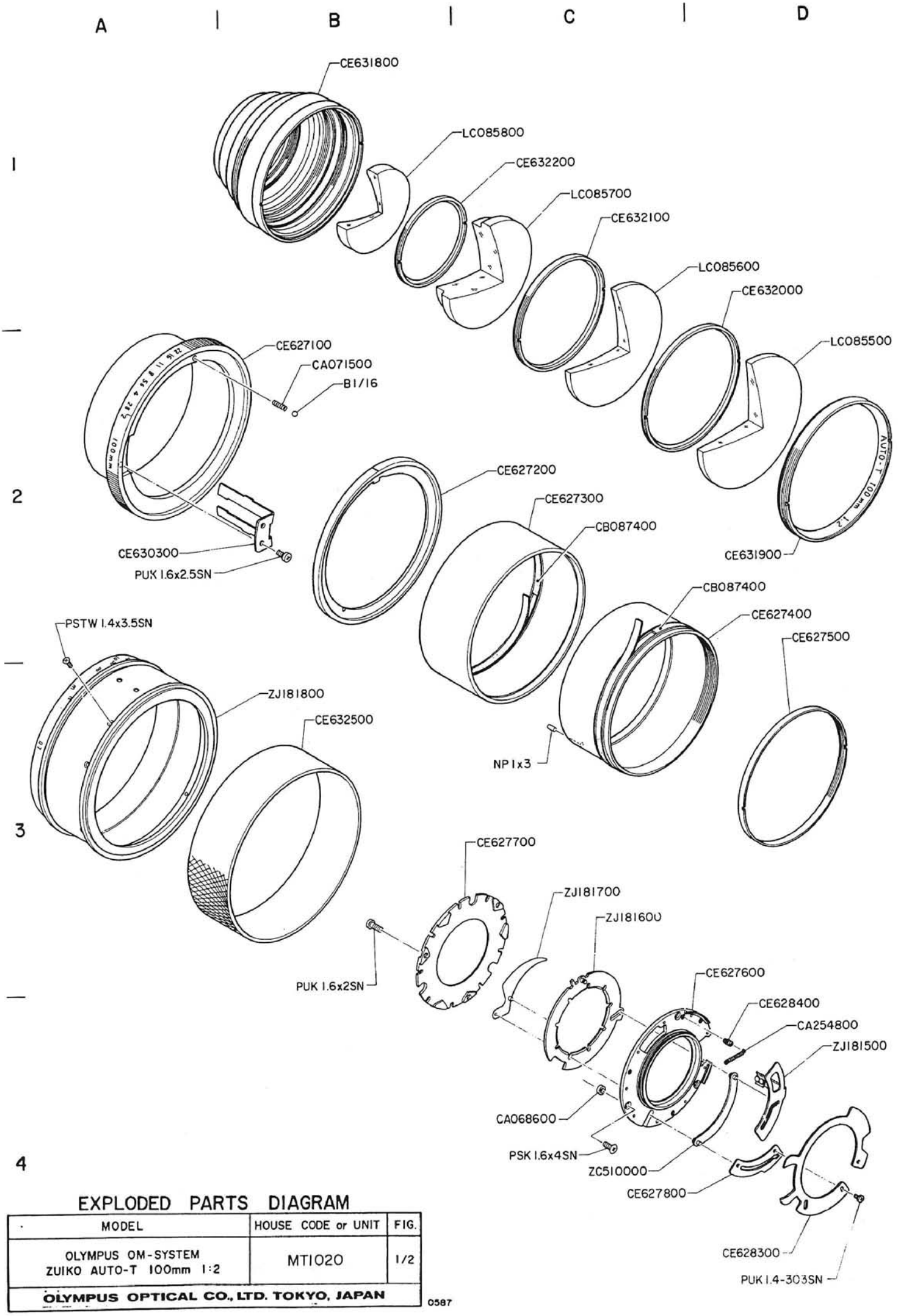

EXPLODED PARTS DIAGRAM

MODEL	HOUSE CODE or UNIT	FIG.
OLYMPUS OM-SYSTEM ZUIKO AUTO-T 100mm 1:2	MT1020	1/2
OLYMPUS OPTICAL CO., LTD. TOKYO, JAPAN		

0587

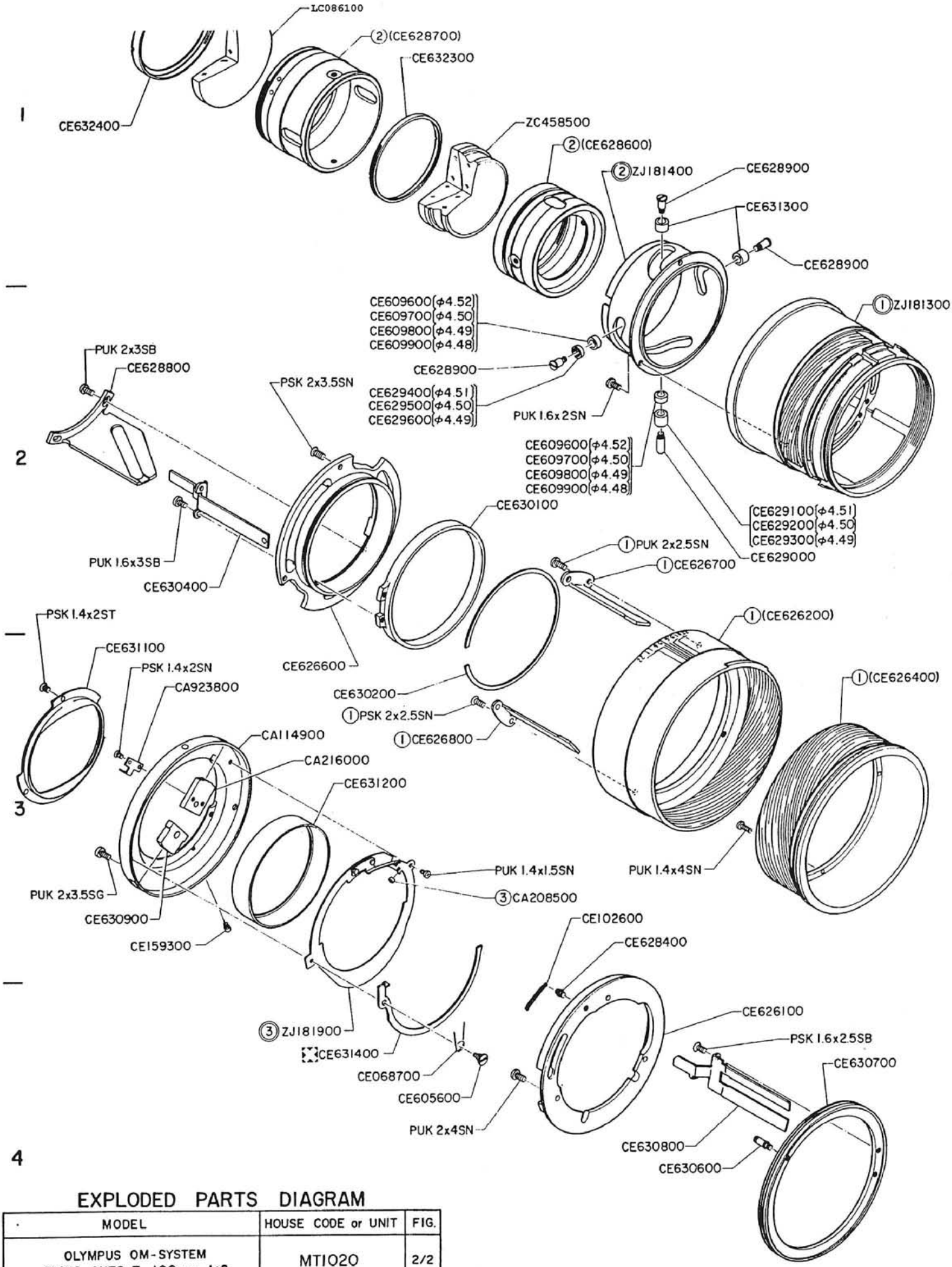

EXPLODED PARTS DIAGRAM

MODEL	HOUSE CODE or UNIT	FIG.
OLYMPUS OM-SYSTEM ZUIKO AUTO-T 100mm 1:2	MT1020	2/2
OLYMPUS OPTICAL CO., LTD. TOKYO, JAPAN		

0587

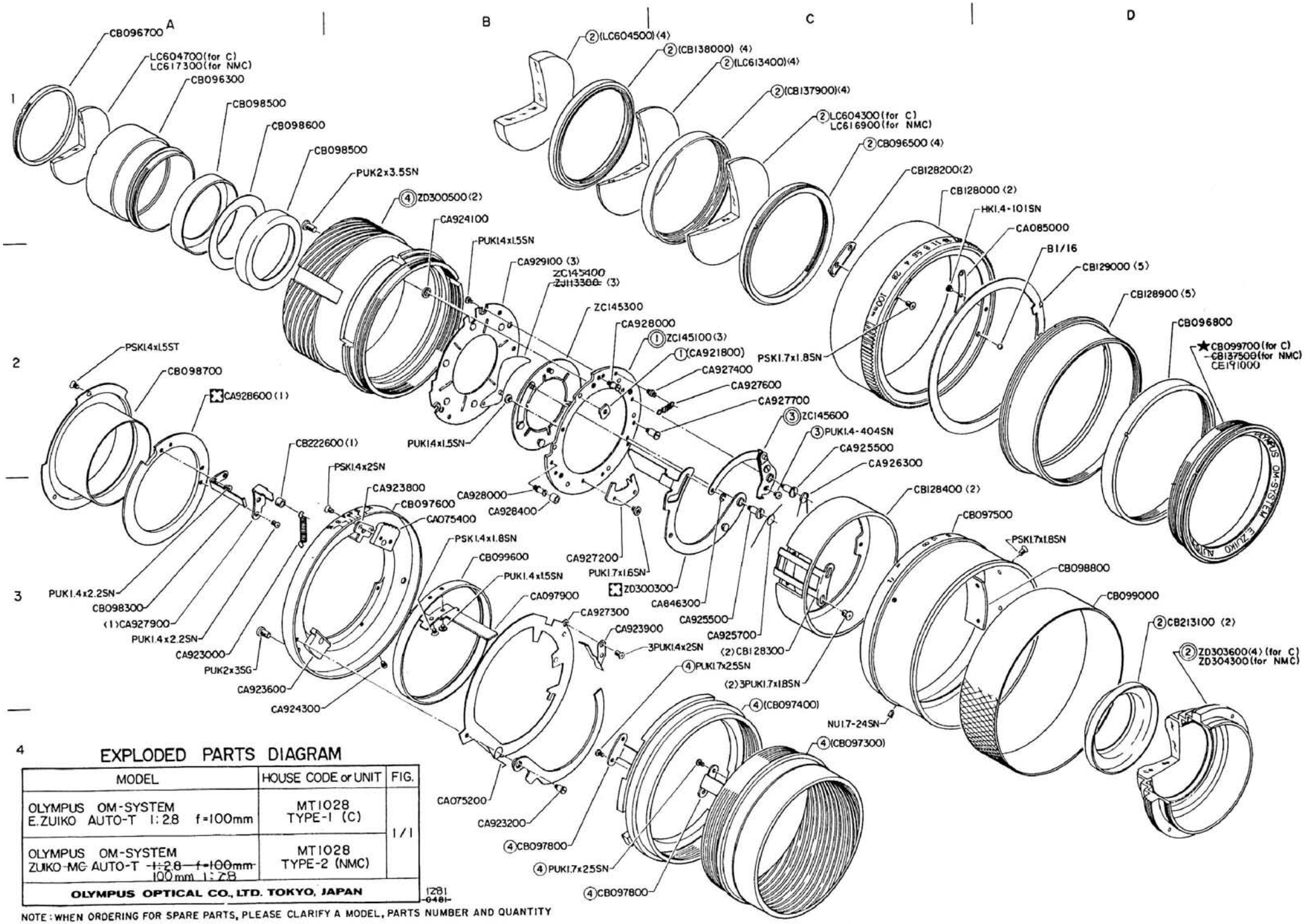

EXPLODED PARTS DIAGRAM

MODEL	HOUSE CODE or UNIT	FIG.
OLYMPUS OM-SYSTEM E.ZUIKO AUTO-T 1:2.8 f=100mm	MT1028 TYPE-1 (C)	1/1
OLYMPUS OM-SYSTEM ZUIKO-MC AUTO-T ~~1:2.8 f=100mm~~ 100mm 1:2.8	MT1028 TYPE-2 (NMC)	
OLYMPUS OPTICAL CO., LTD. TOKYO, JAPAN		

1281
-0481-

NOTE: WHEN ORDERING FOR SPARE PARTS, PLEASE CLARIFY A MODEL, PARTS NUMBER AND QUANTITY

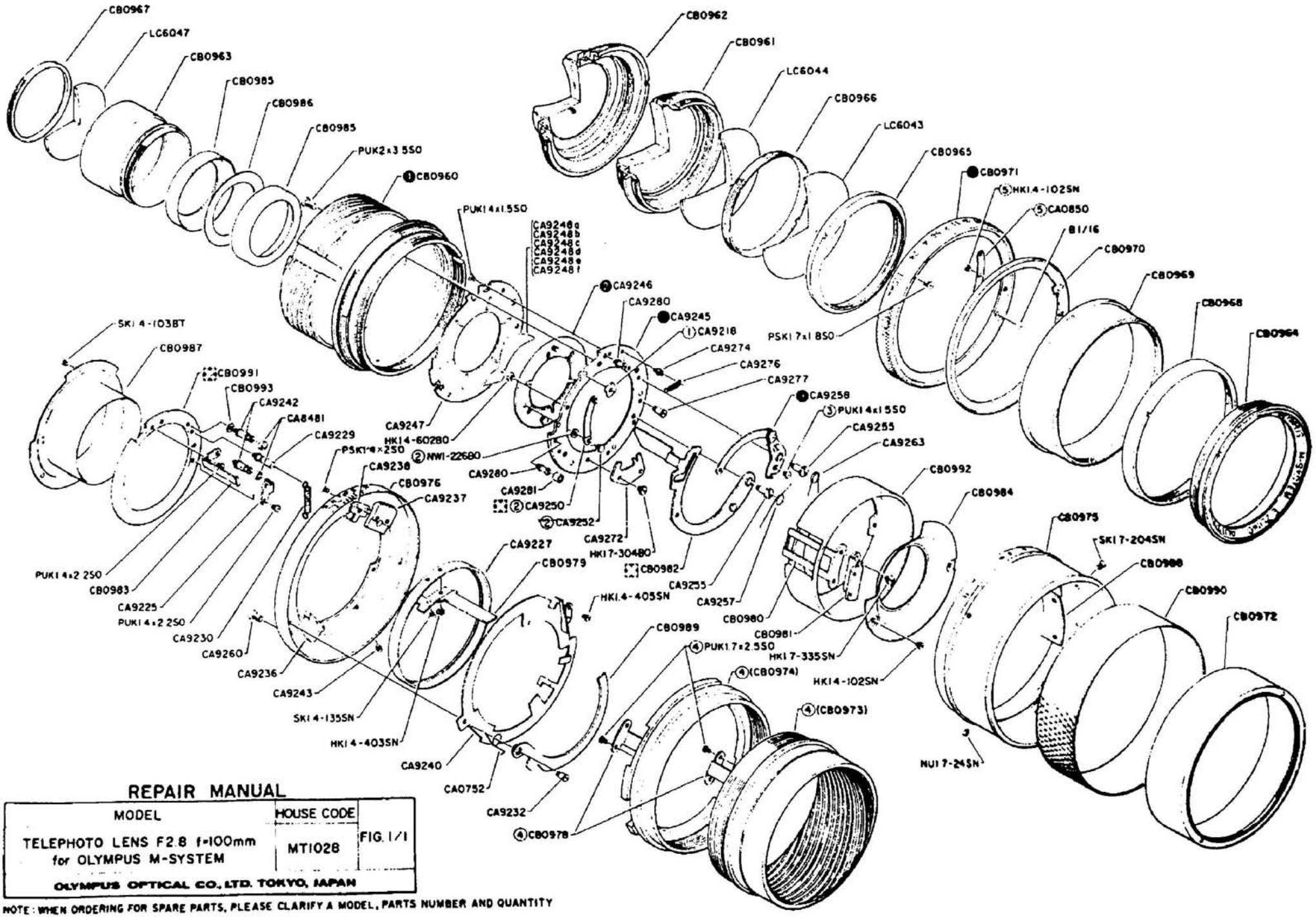

REPAIR MANUAL

MODEL	HOUSE CODE	
TELEPHOTO LENS F2.8 f=100mm for OLYMPUS M-SYSTEM	MT1028	FIG. 1/1

OLYMPUS OPTICAL CO., LTD. TOKYO, JAPAN

NOTE: WHEN ORDERING FOR SPARE PARTS, PLEASE CLARIFY A MODEL, PARTS NUMBER AND QUANTITY

IMPROVED PARTS TABLE

〈1〉

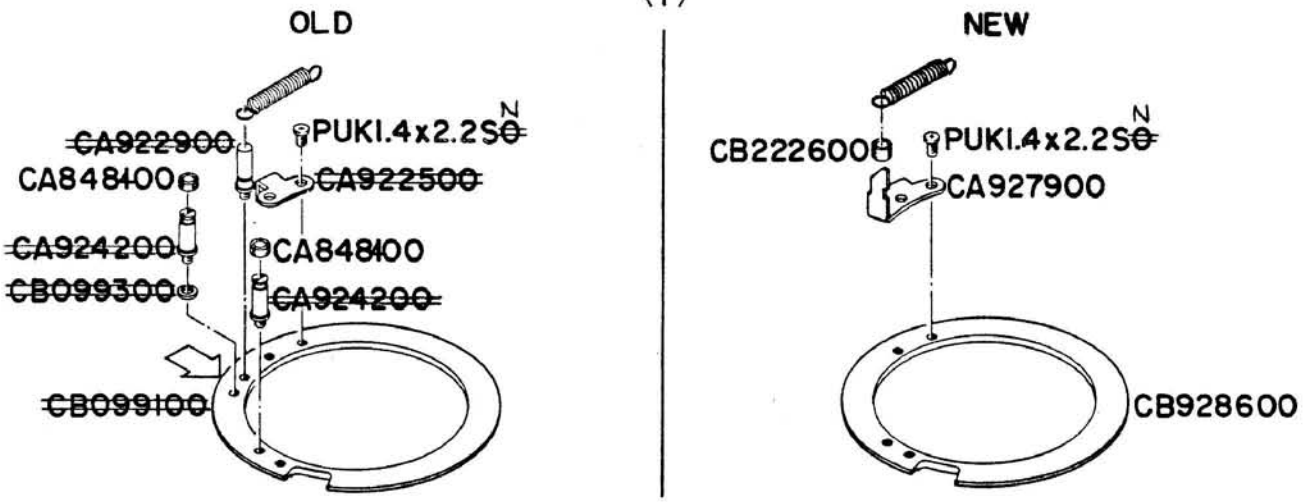

〈3〉

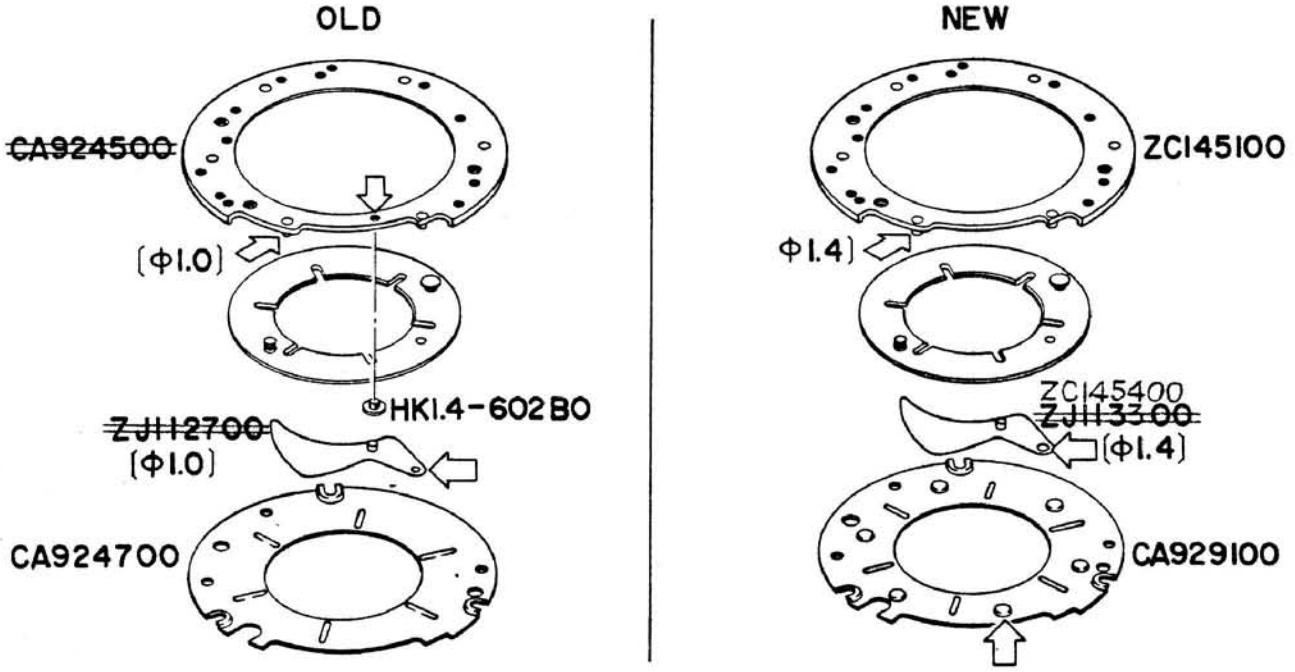

〈5〉

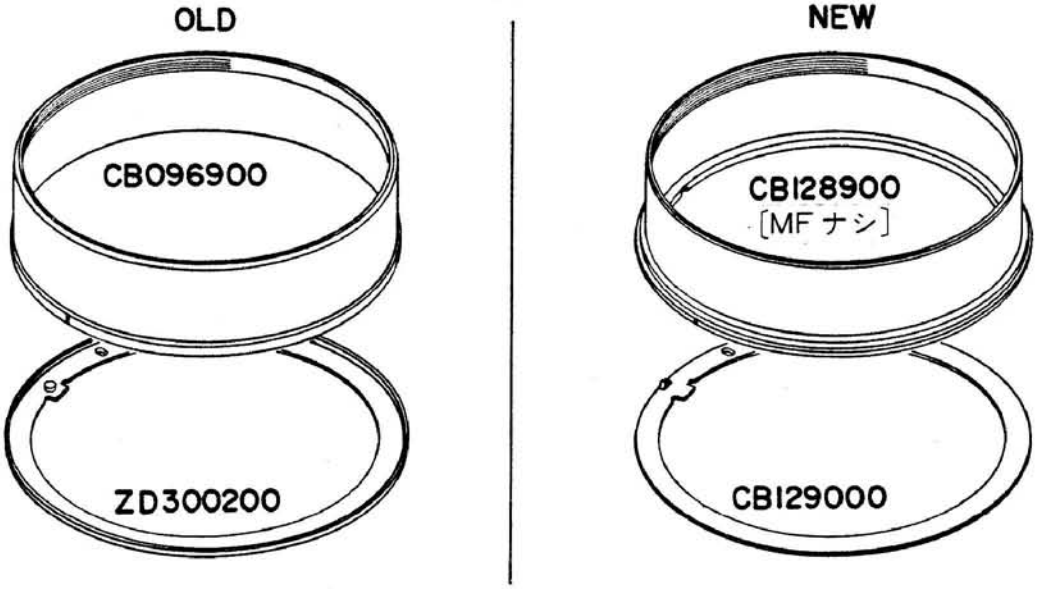

〈2〉

OLD

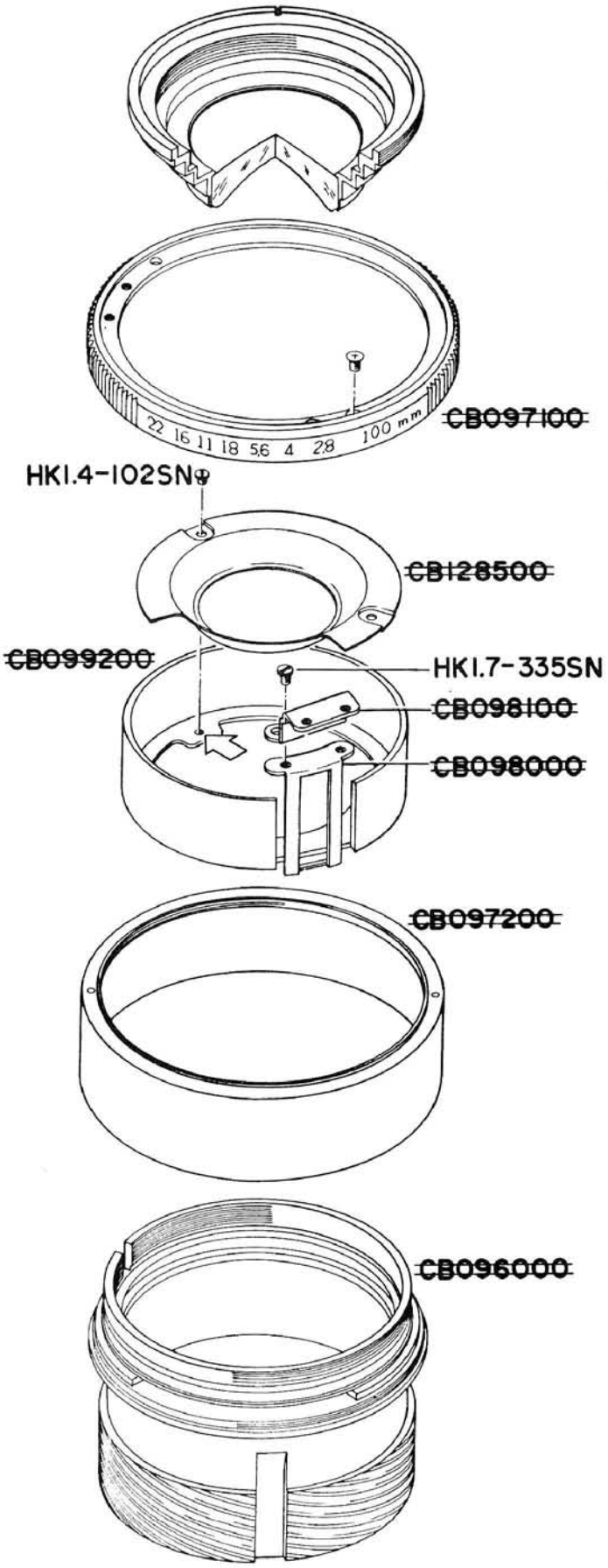
22 16 11 18 5.6 4 2.8 100 mm
~~CB097100~~
HK1.4-102SN
~~CB128500~~
~~CB099200~~
HK1.7-335SN
~~CB098100~~
~~CB098000~~
~~CB097200~~
~~CB096000~~

NEW

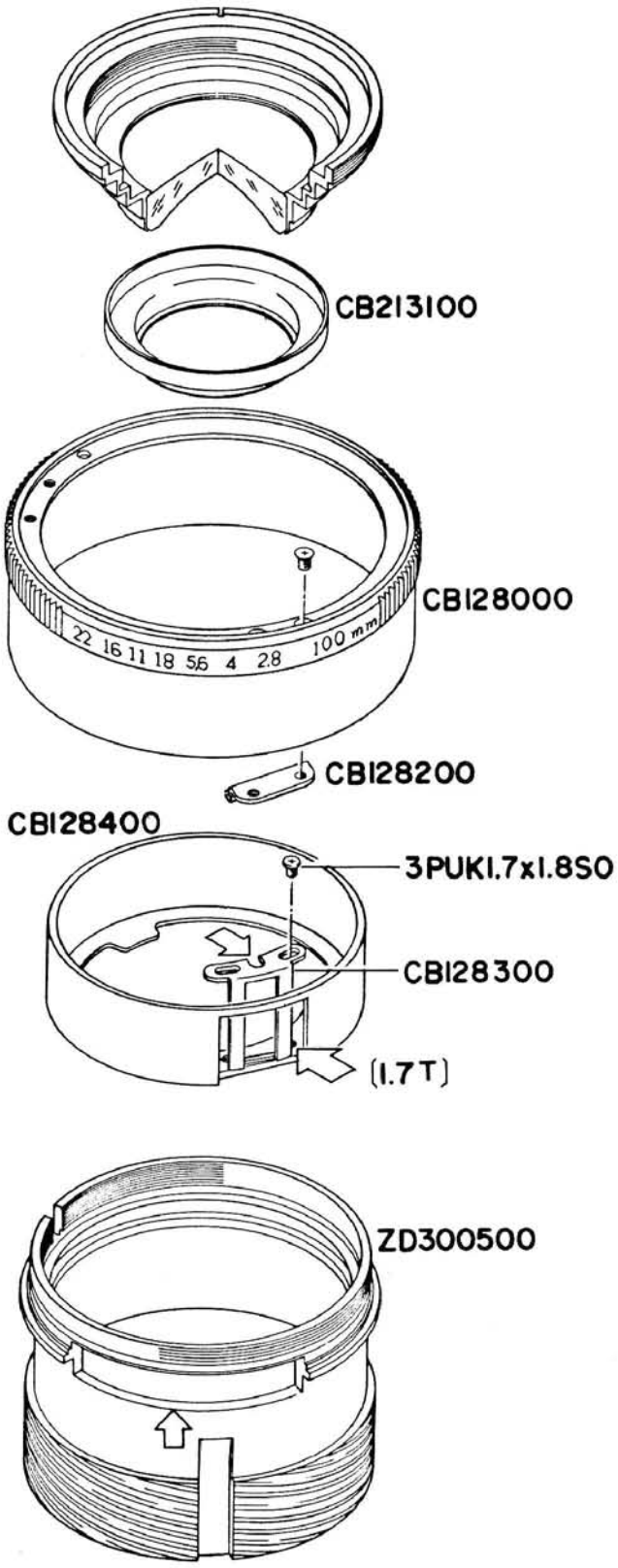
CB213100
22 16 11 18 5.6 4 2.8 100 mm
CB128000
CB128200
CB128400
3PUK1.7x1.8S0
CB128300
(1.7T)
ZD300500

〈4〉

OLD

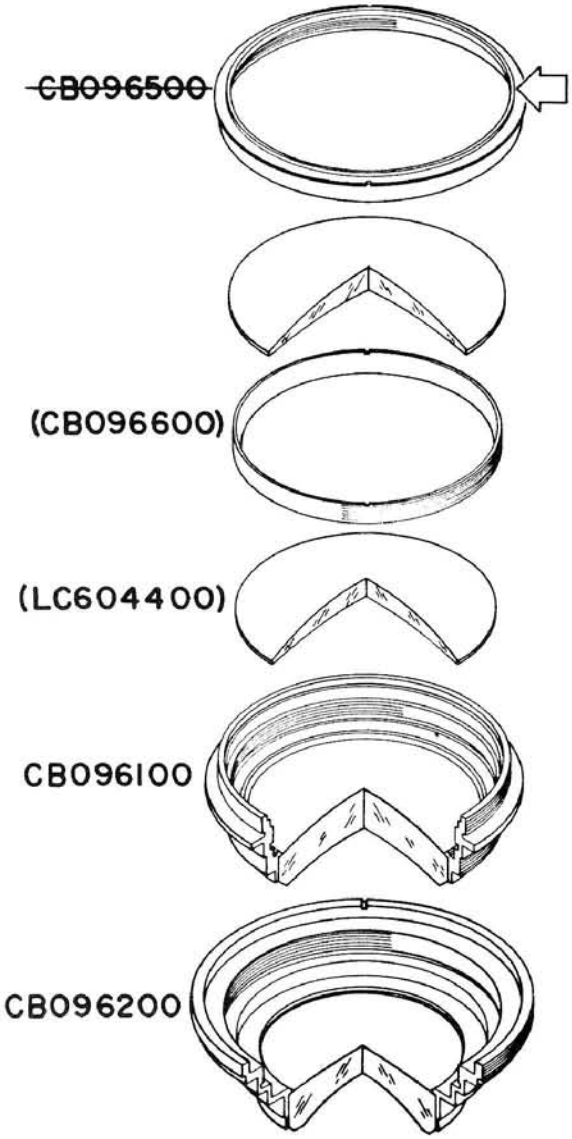
~~CB096500~~
(CB096600)
(LC604400)
CB096100
CB096200

NEW

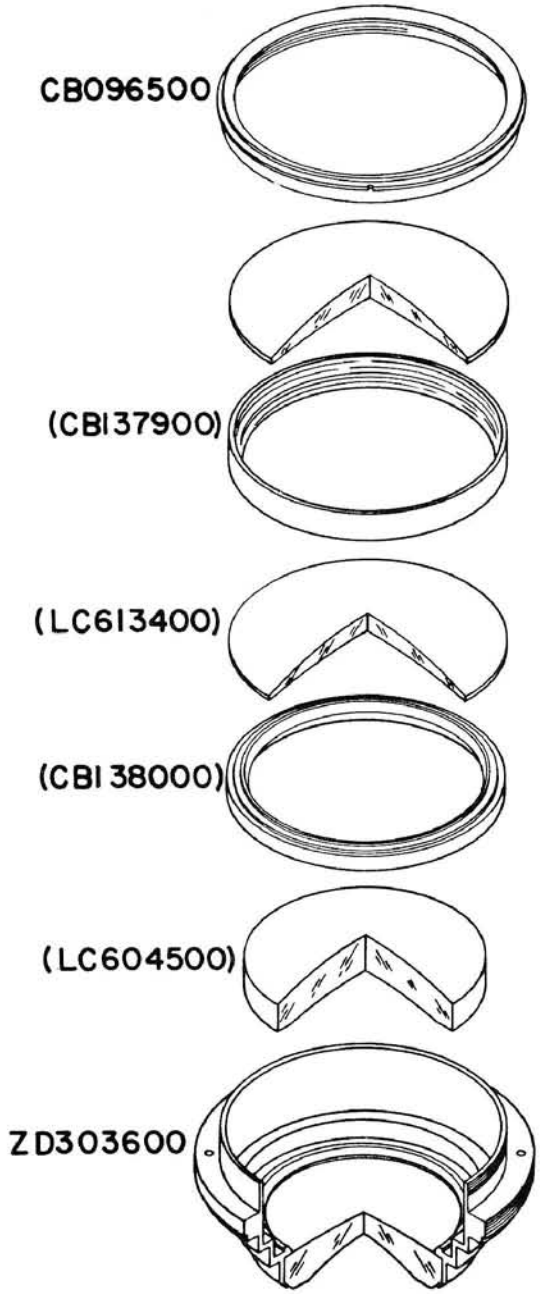
CB096500
(CB137900)
(LC613400)
(CB138000)
(LC604500)
ZD303600

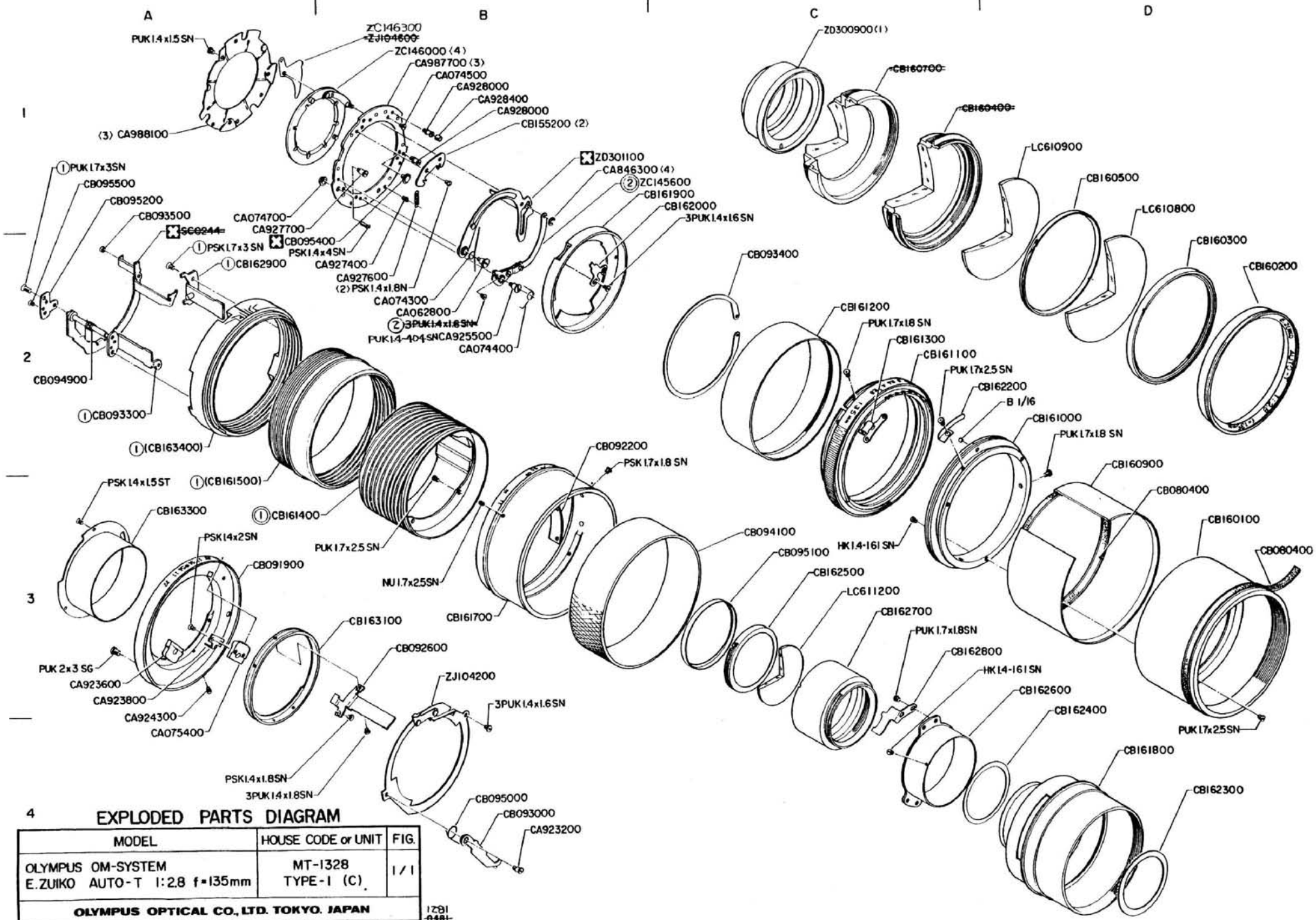

EXPLODED PARTS DIAGRAM

MODEL	HOUSE CODE or UNIT	FIG.
OLYMPUS OM-SYSTEM E.ZUIKO AUTO-T 1:2.8 f=135mm	MT-1328 TYPE-1 (C)	1/1
OLYMPUS OPTICAL CO., LTD. TOKYO. JAPAN		

1281
~~0481~~

NOTE: WHEN ORDERING FOR SPARE PARTS, PLEASE CLARIFY A MODEL, PARTS NUMBER AND QUANTITY

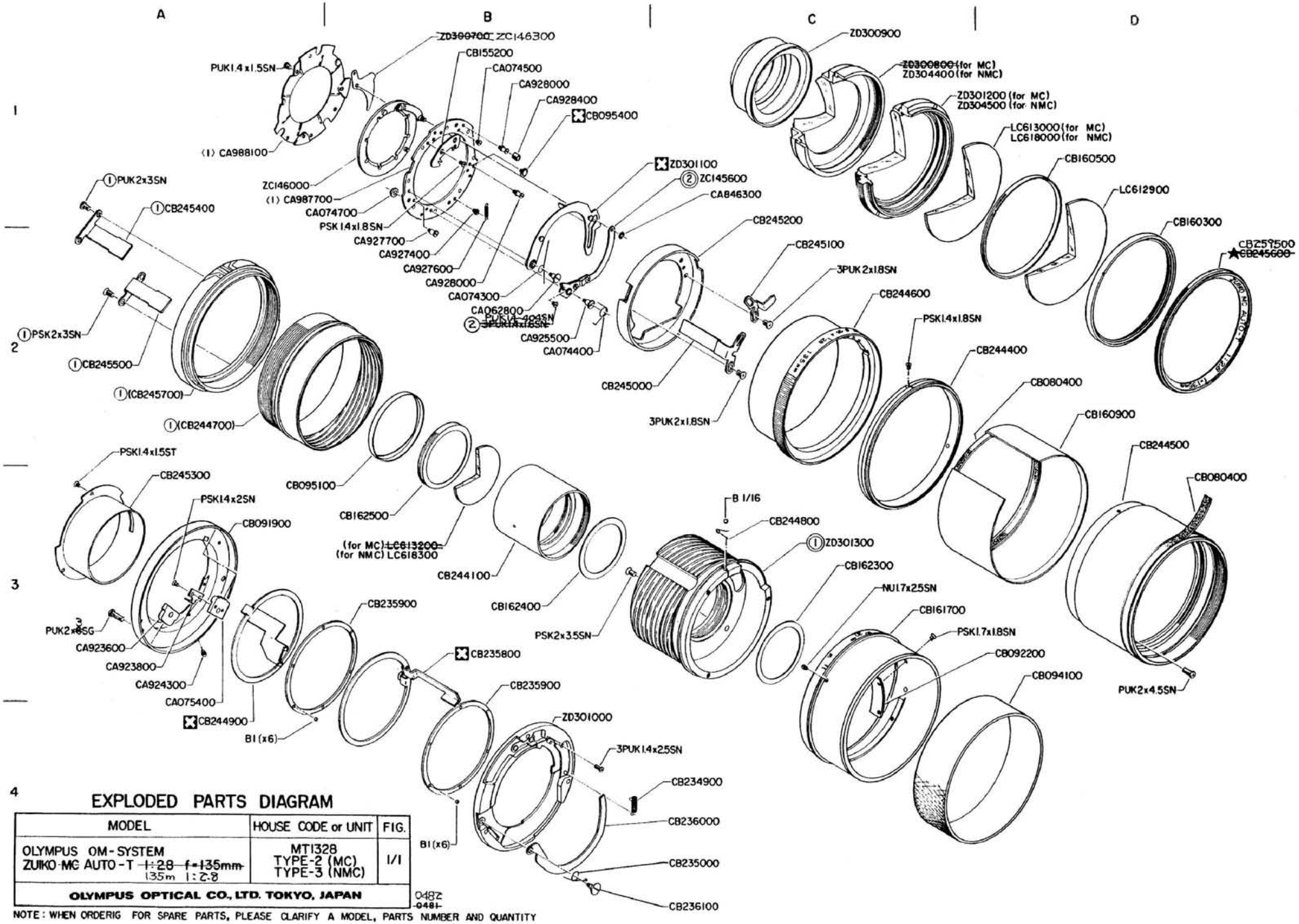

EXPLODED PARTS DIAGRAM

MODEL	HOUSE CODE or UNIT	FIG.
OLYMPUS OM-SYSTEM ZUIKO-MC AUTO-T ~~1:2.8 f=135mm~~ 135m 1:2.8	MT1328 TYPE-2 (MC) TYPE-3 (NMC)	1/1
OLYMPUS OPTICAL CO., LTD. TOKYO, JAPAN		

0482
~~0481~~

NOTE: WHEN ORDERIG FOR SPARE PARTS, PLEASE CLARIFY A MODEL, PARTS NUMBER AND QUANTITY

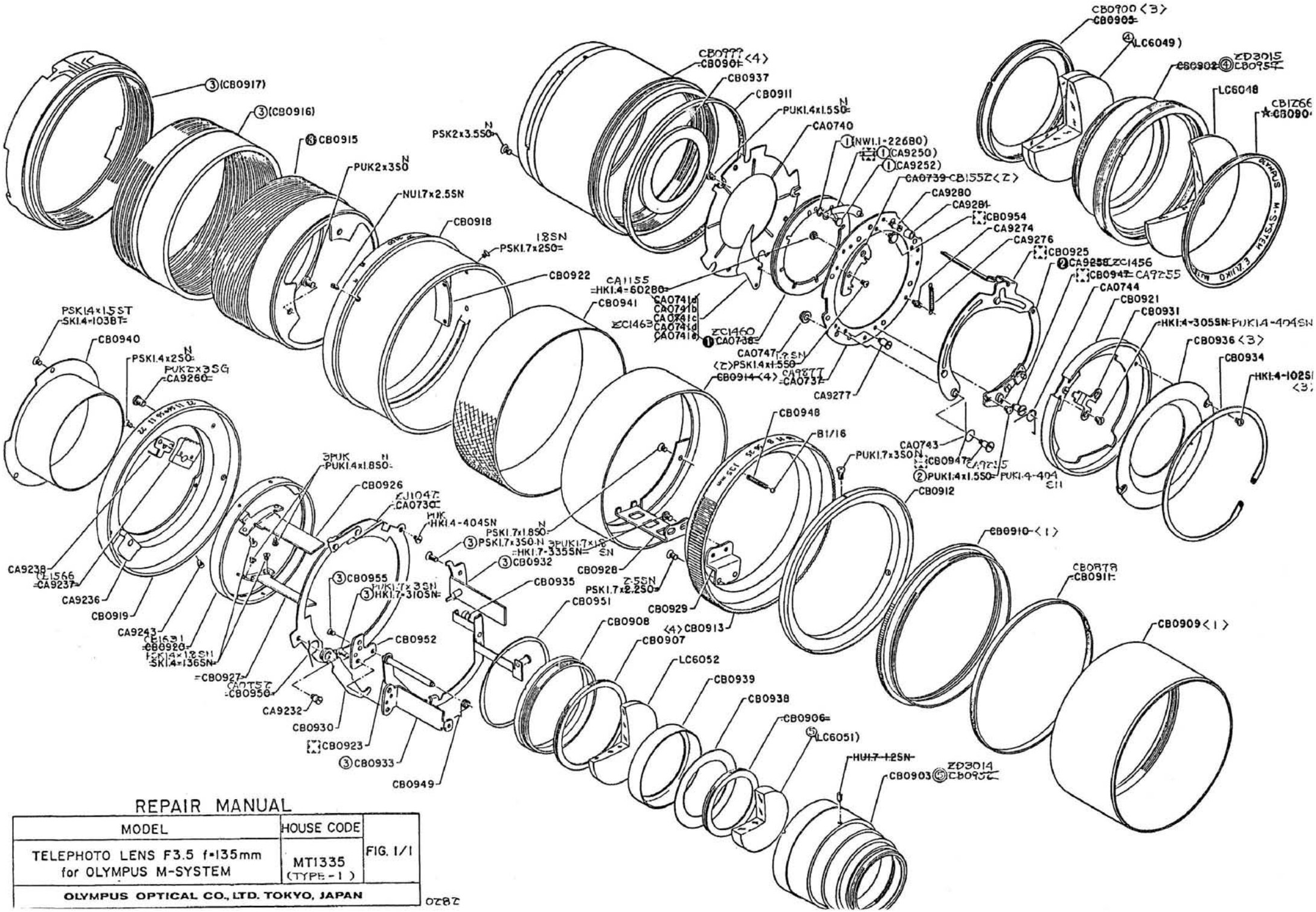

REPAIR MANUAL

MODEL	HOUSE CODE	
TELEPHOTO LENS F3.5 f=135mm for OLYMPUS M-SYSTEM	MT1335 (TYPE-1)	FIG. 1/1
OLYMPUS OPTICAL CO., LTD. TOKYO, JAPAN		

2820

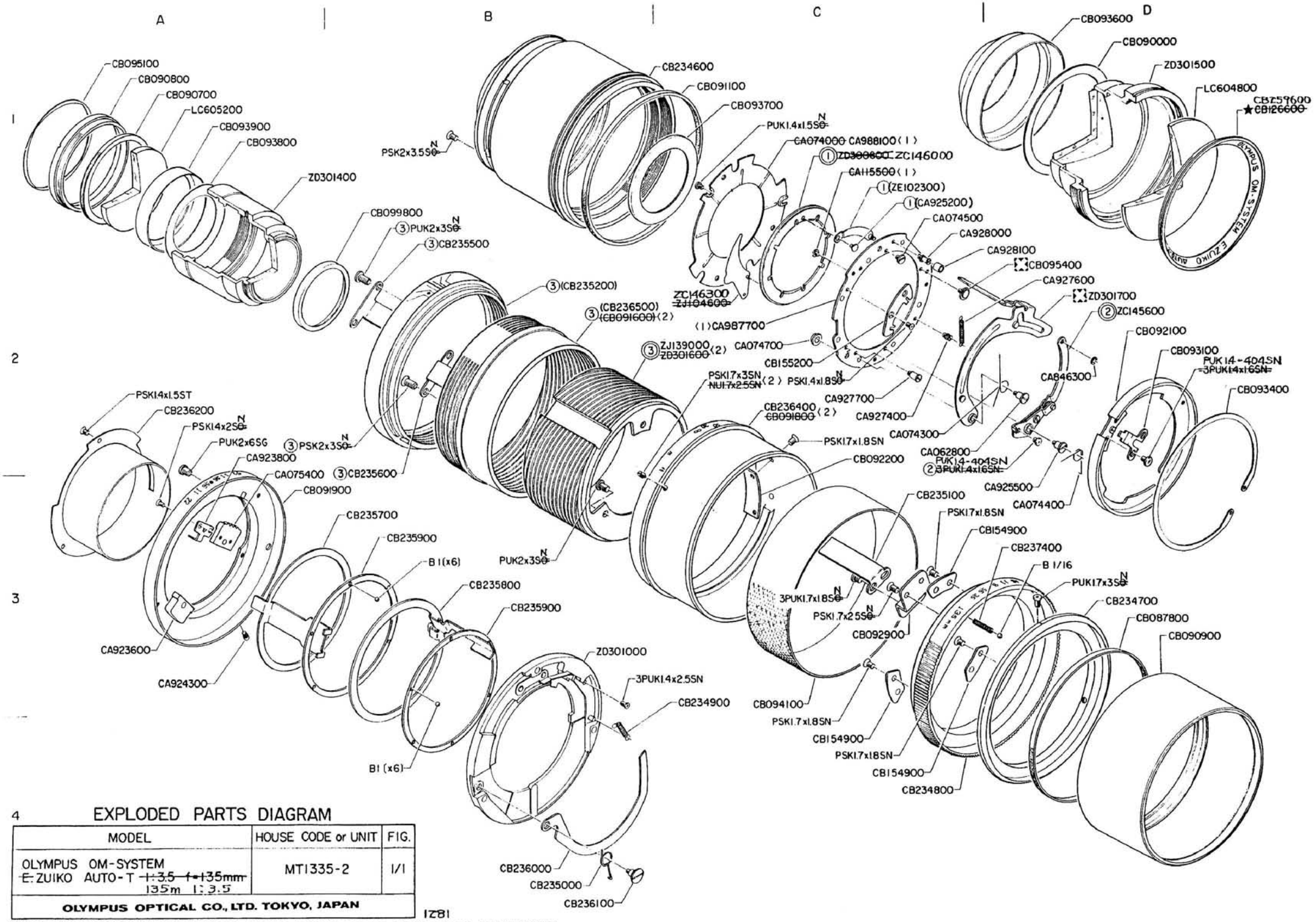

EXPLODED PARTS DIAGRAM

MODEL	HOUSE CODE or UNIT	FIG.
OLYMPUS OM-SYSTEM E.ZUIKO AUTO-T ~~1:3.5 f=135mm~~ 135m 1:3.5	MT1335-2	1/1
OLYMPUS OPTICAL CO., LTD. TOKYO, JAPAN		

1281

NOTE: WHEN ORDERING FOR SPARE PARTS, PLEASE CLARIFY A MODEL, PARTS NUMBER AND QUANTITY

MT1335 (TYPE-1) 変更部品表 IMPROVED PARTS TABLE

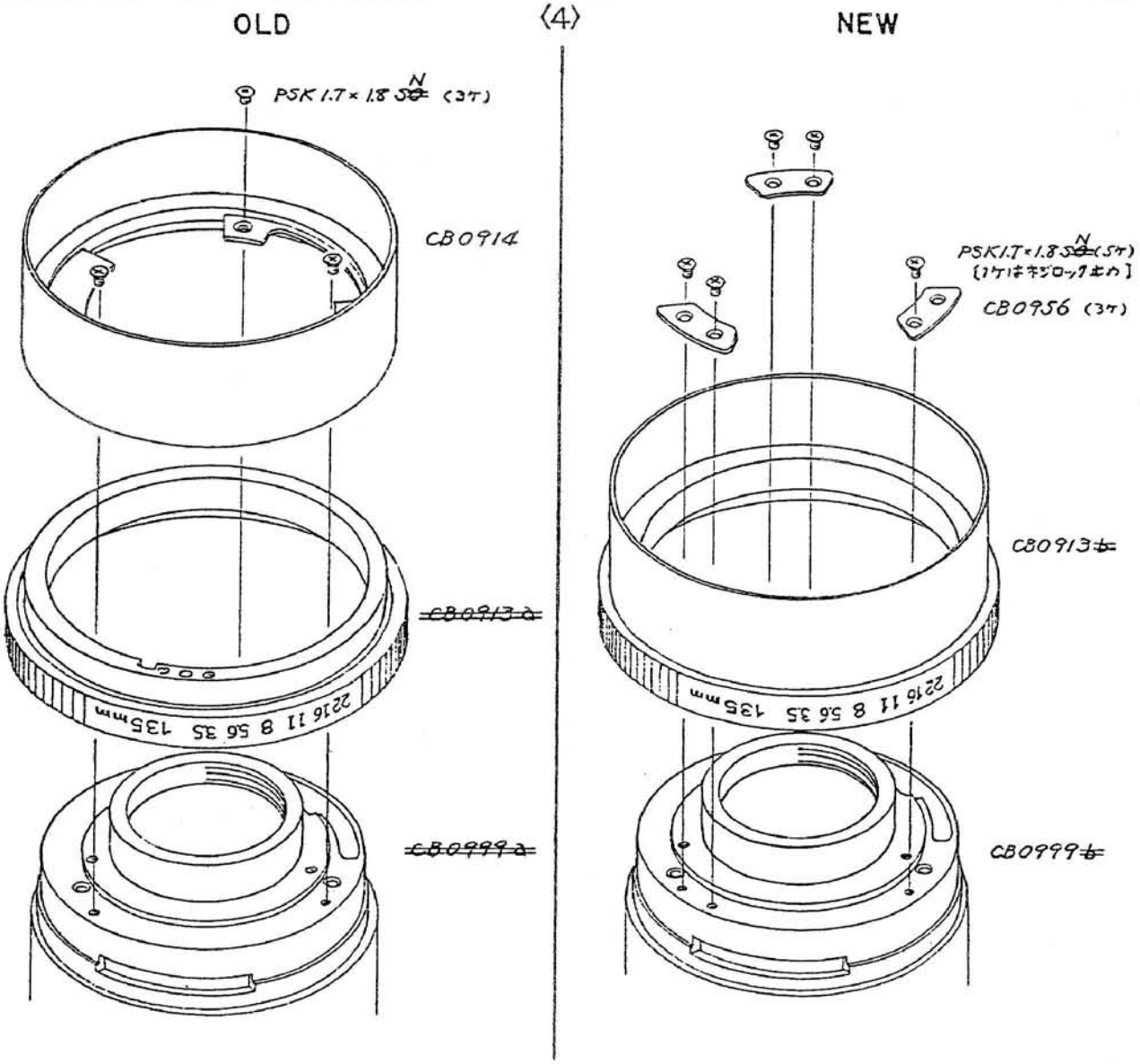

MT1335 (TYPE-1) 変更部品表 IMPROVED PARTS TABLE

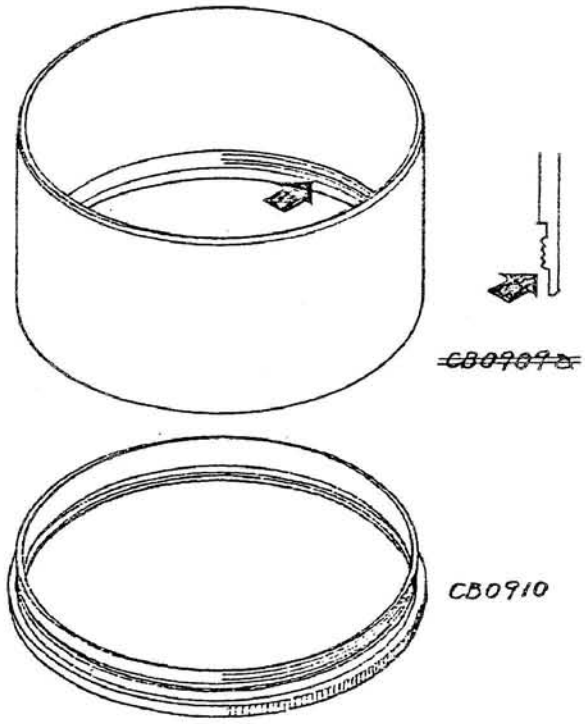

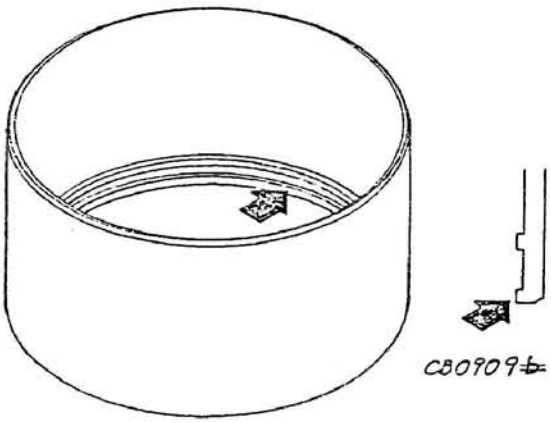

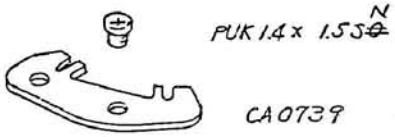

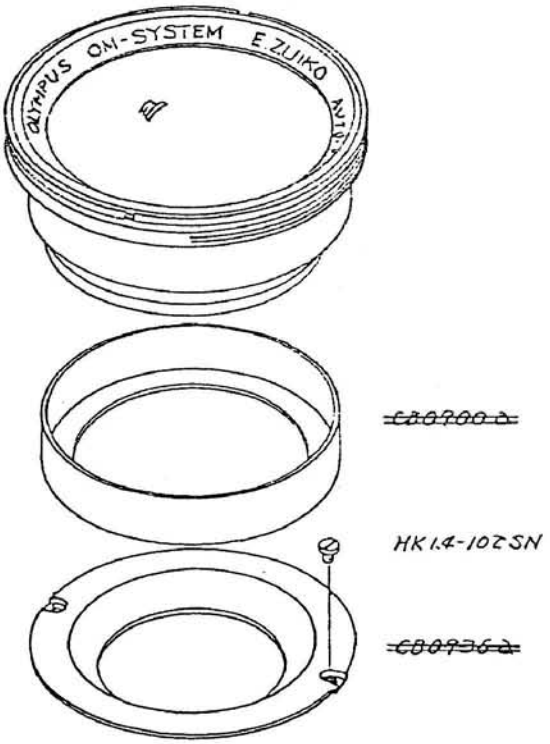

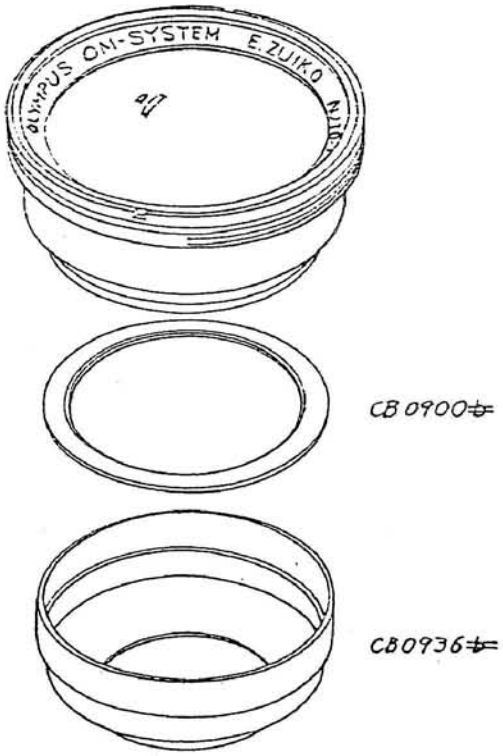

MT1335-2 変更部品表　IMPROVED PARTS TABLE

〈1〉

OLD

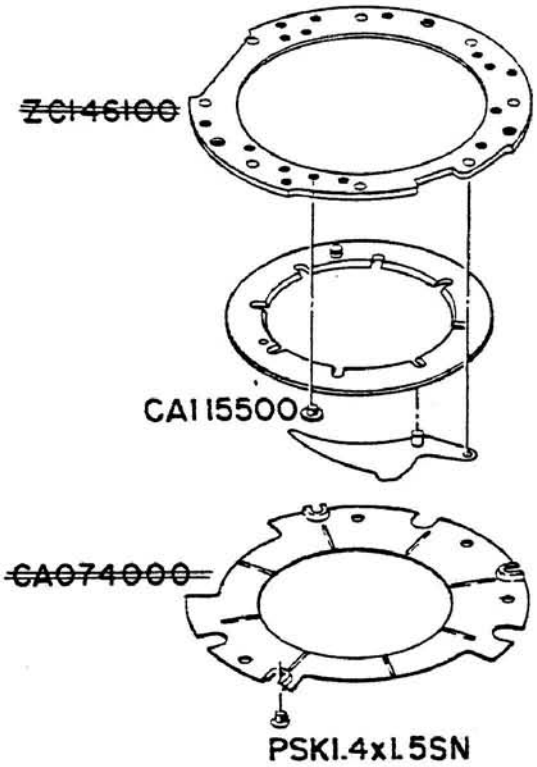

NEW

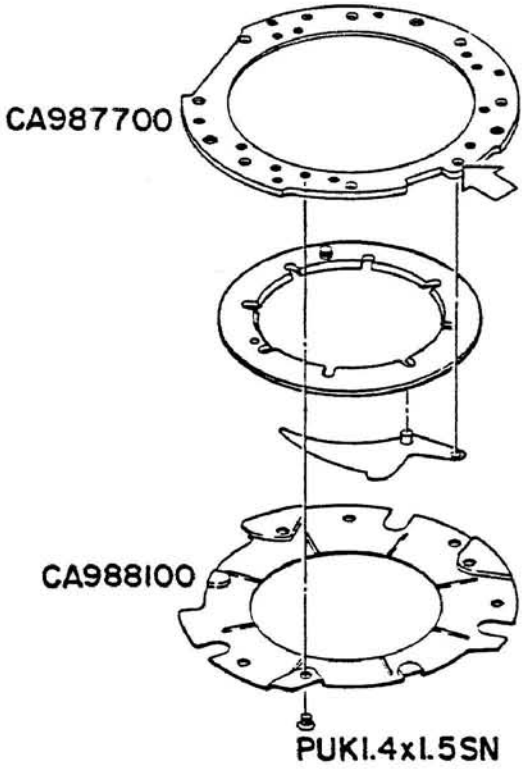

〈2〉

OLD

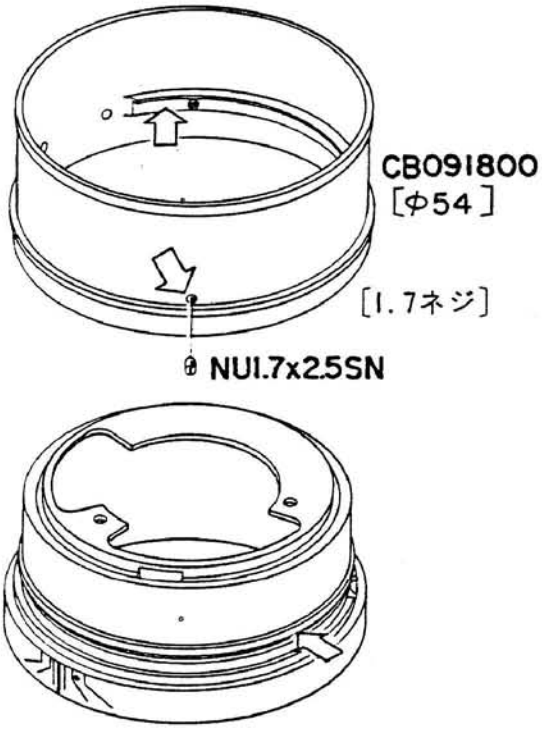

NEW

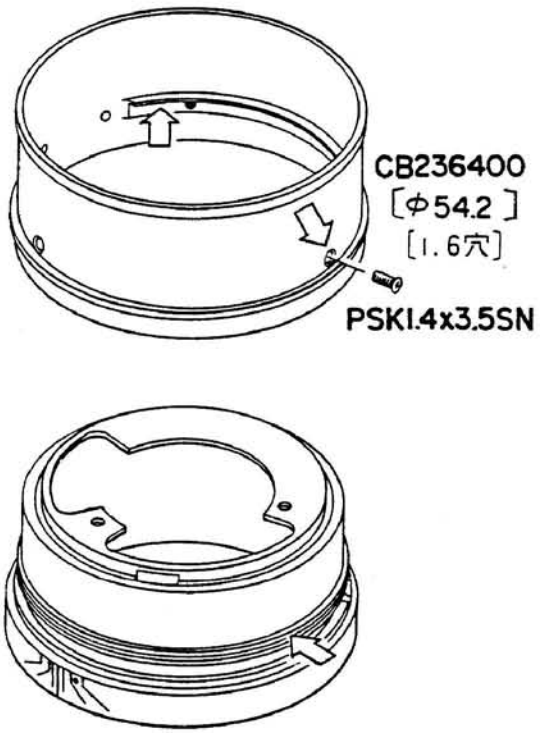

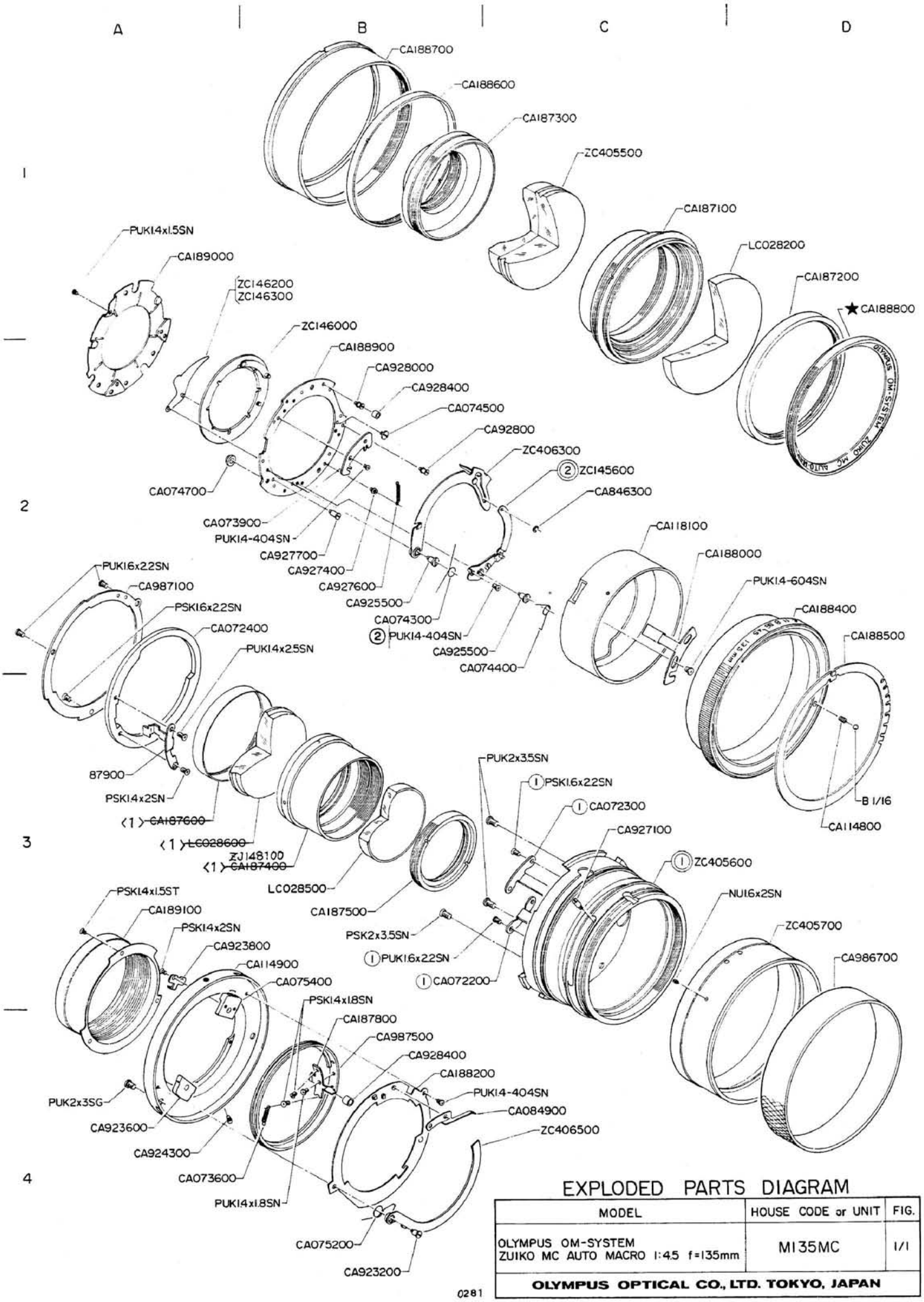

EXPLODED PARTS DIAGRAM

MODEL	HOUSE CODE or UNIT	FIG.
OLYMPUS OM-SYSTEM ZUIKO MC AUTO MACRO 1:4.5 f=135mm	M135MC	1/1
OLYMPUS OPTICAL CO., LTD. TOKYO, JAPAN		

0281

NOTE : WHEN ORDERING FOR SPARE PARTS, PLEASE CLARIFY A MODEL or HOUSE CODE, PARTS NUMBER AND QUANTITY.

変更部品表 IMPROVED PARTS TABLE

〈1〉

OLD

CA187600

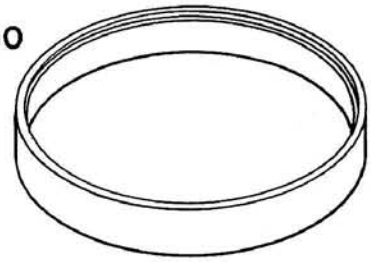

LC028600

CA187400

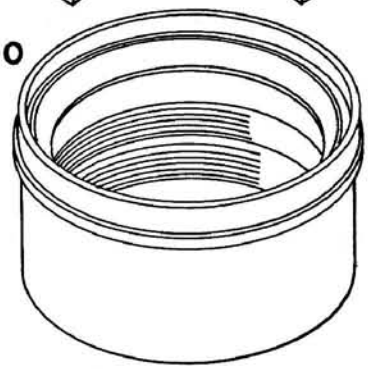

NEW

ZJ148100
〔カシメ〕

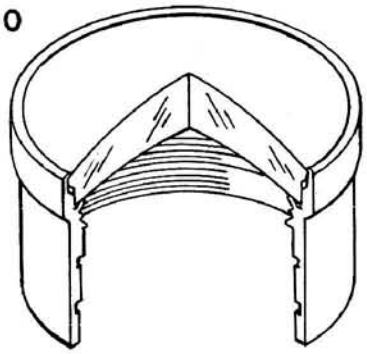

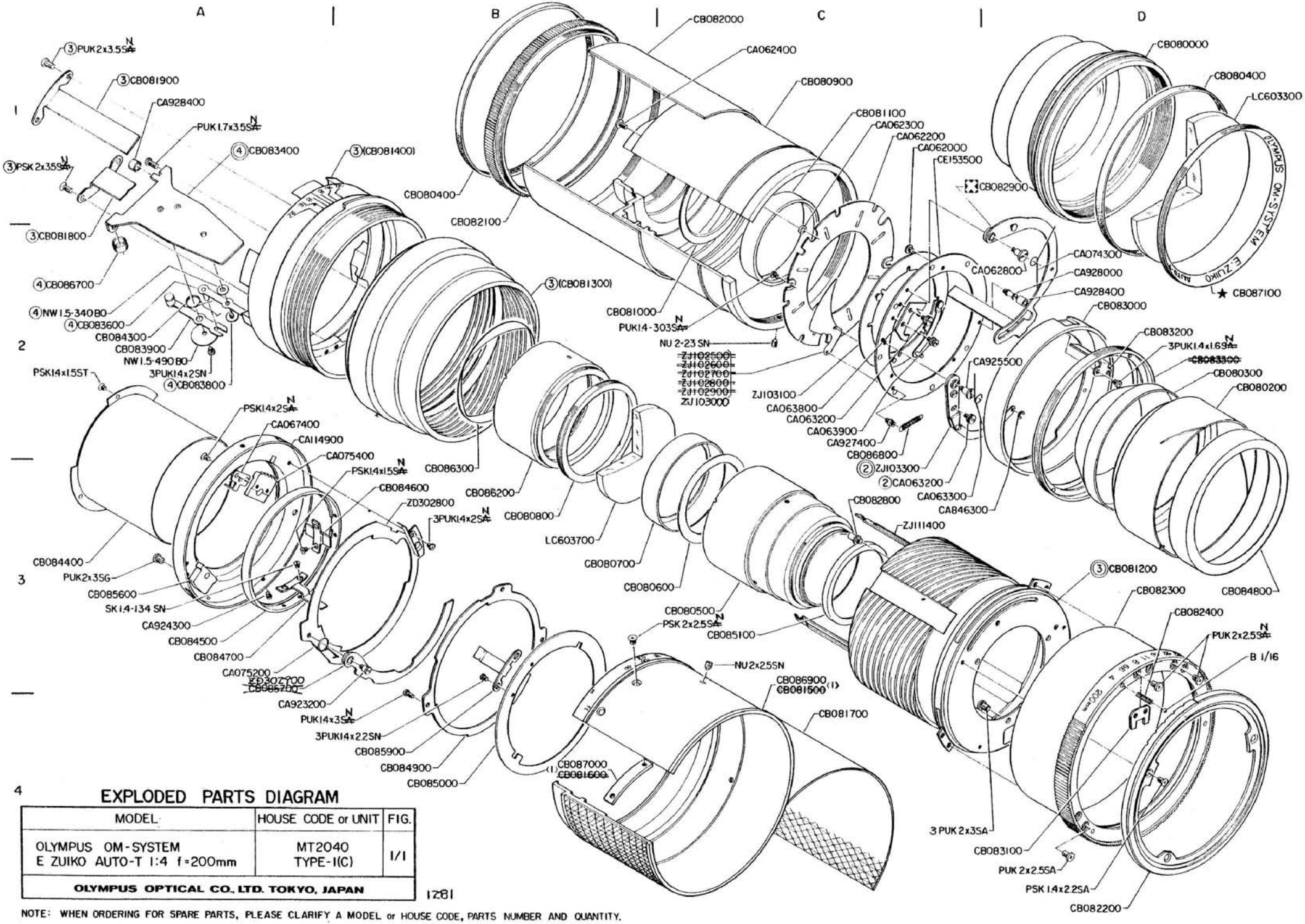

EXPLODED PARTS DIAGRAM

MODEL	HOUSE CODE or UNIT	FIG.
OLYMPUS OM-SYSTEM E ZUIKO AUTO-T 1:4 f=200mm	MT2040 TYPE-1(C)	1/1
OLYMPUS OPTICAL CO., LTD. TOKYO, JAPAN		

1281

NOTE: WHEN ORDERING FOR SPARE PARTS, PLEASE CLARIFY A MODEL or HOUSE CODE, PARTS NUMBER AND QUANTITY.

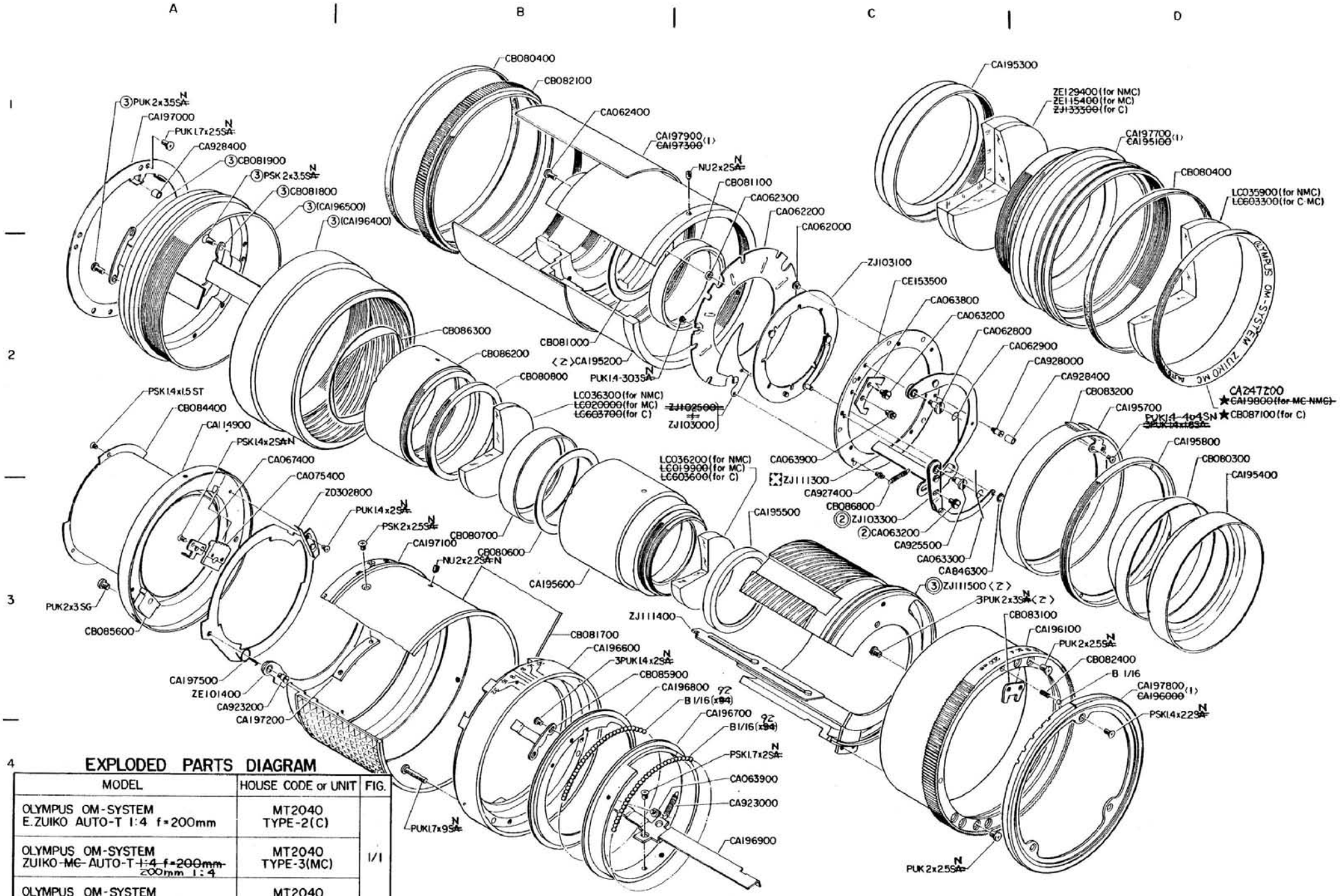

EXPLODED PARTS DIAGRAM

MODEL	HOUSE CODE or UNIT	FIG.
OLYMPUS OM-SYSTEM E.ZUIKO AUTO-T 1:4 f=200mm	MT2040 TYPE-2(C)	1/1
OLYMPUS OM-SYSTEM ZUIKO ~~MC~~ AUTO-T ~~1:4 f=200mm~~ 200mm 1:4	MT2040 TYPE-3(MC)	
OLYMPUS OM-SYSTEM ZUIKO ~~MC~~ AUTO-T ~~1:4 f=200mm~~ 200mm 1:4	MT2040 TYPE-4(NMC)	
OLYMPUS OPTICAL CO., LTD. TOKYO, JAPAN		

1281

NOTE : WHEN ORDERING FOR SPARE PARTS, PLEASE CLARIFY A MODEL or HOUSE CODE, PARTS NUMBER AND QUANTITY.

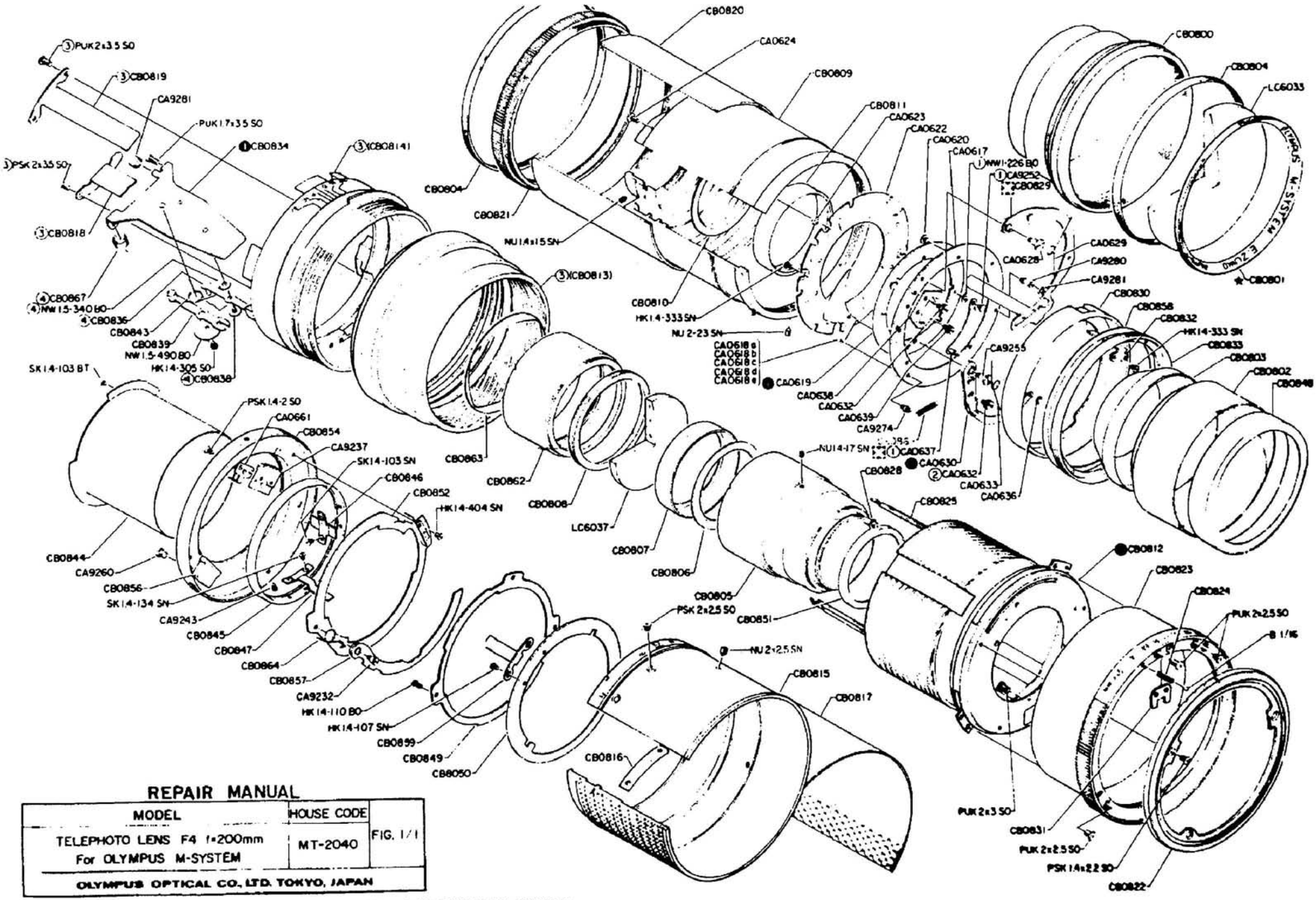

REPAIR MANUAL

MODEL	HOUSE CODE	
TELEPHOTO LENS F4 f=200mm For OLYMPUS M-SYSTEM	MT-2040	FIG. 1/1
OLYMPUS OPTICAL CO., LTD. TOKYO, JAPAN		

NOTE: WHEN ORDERING FOR SPARE PARTS, PLEASE CLARIFY A MODEL, PARTS NUMBER AND QUANTITY

MT2040
(TYPE-2·3·4)

変更部品表 IMPROVED PARTS TABLE

〈2〉

OLD

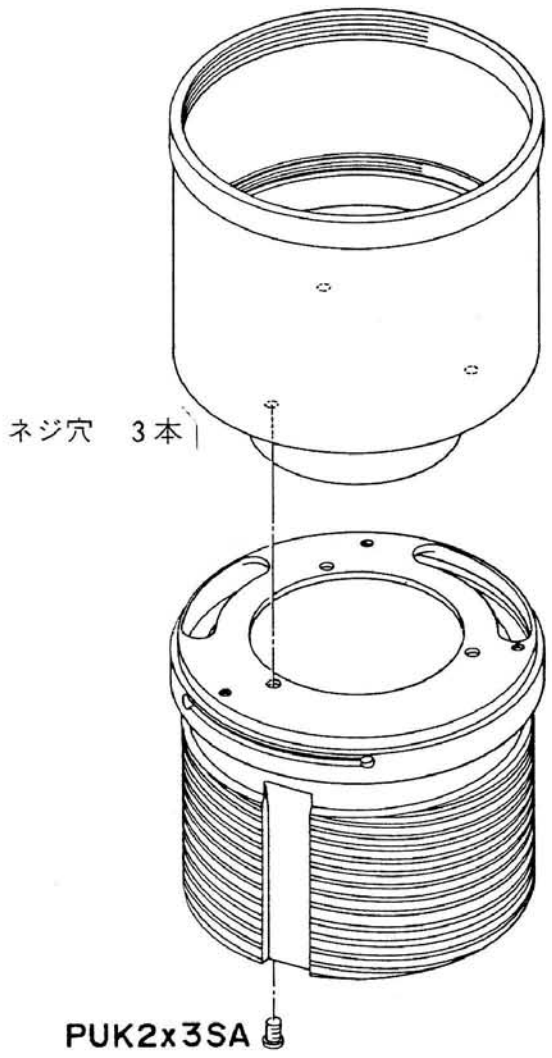

NEW

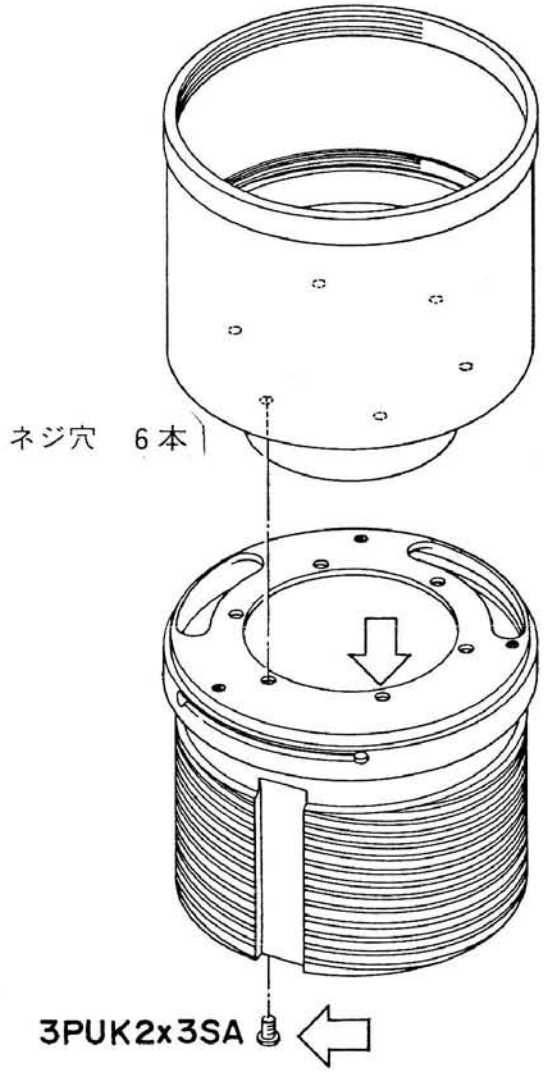

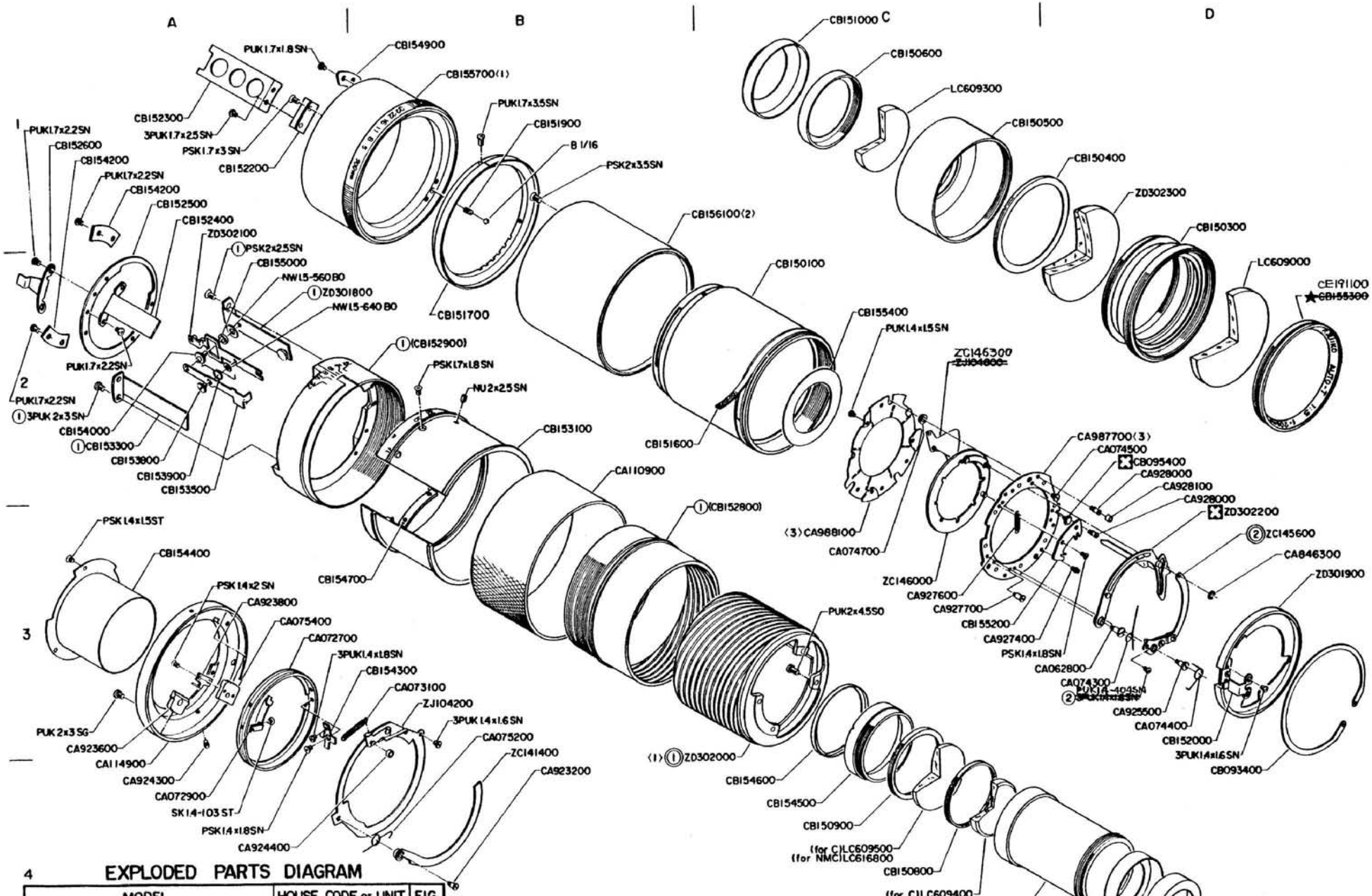

EXPLODED PARTS DIAGRAM

MODEL	HOUSE CODE or UNIT	FIG.
OLYMPUS OM-SYSTEM F. ZUIKO AUTO-T 1:5 f=200mm	MT-2050 TYPE-1 (C)	1/1
OLYMPUS OM-SYSTEM ZUIKO ~~MC~~ AUTO-T ~~1:5 f=200mm~~ ZOOmm 1:5	MT-2050 TYPE-2 (NMC)	
OLYMPUS OPTICAL CO., LTD. TOKYO, JAPAN		

1281
~~0481~~

NOTE: WHEN ORDERING FOR SPARE PARTS, PLEASE CLARIFY A MODEL, PARTS NUMBER AND QUANTITY

MT-2050 変更部品表 IMPROVED PARTS TABLE

〈1〉

OLD

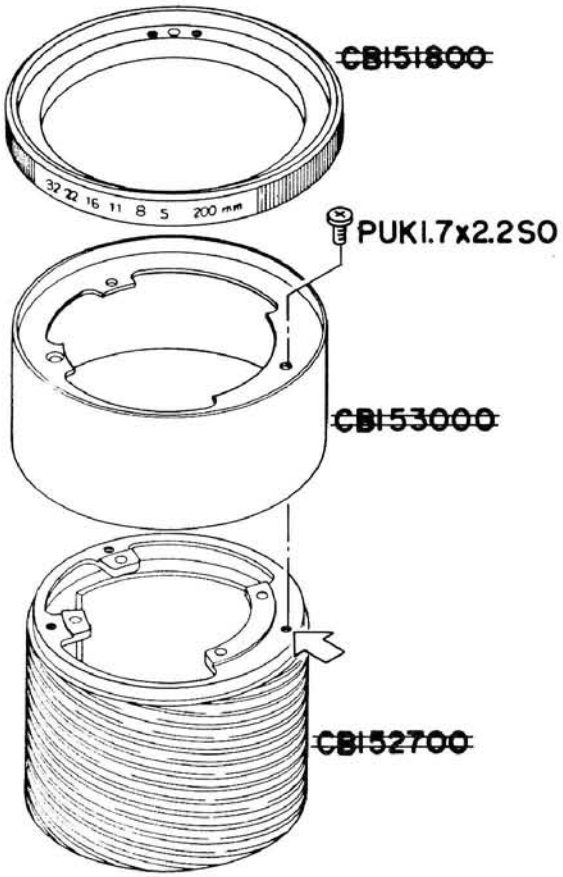

NEW

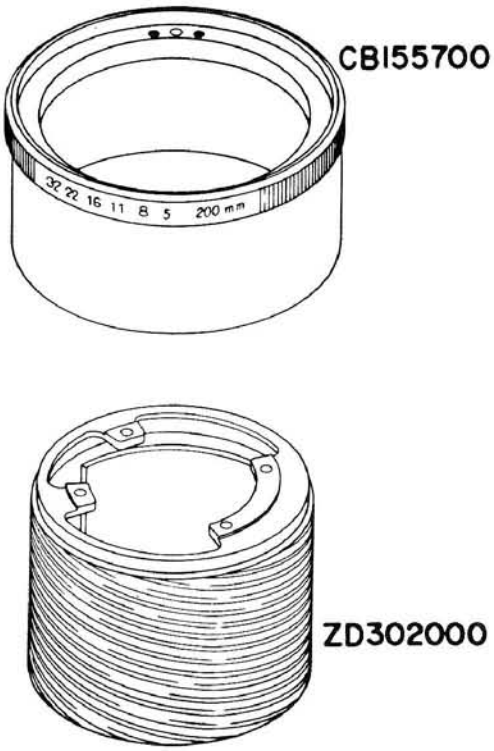

〈2〉

OLD

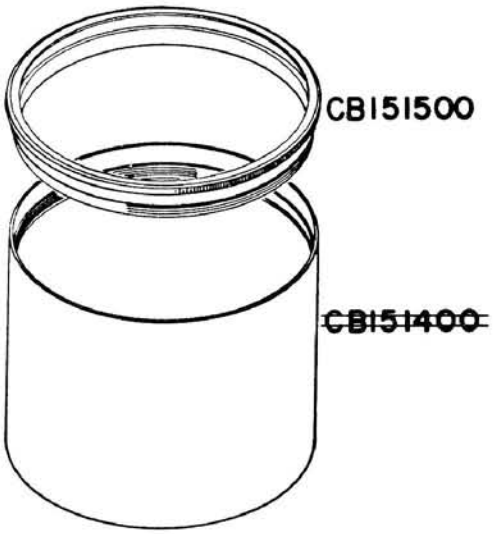

NEW

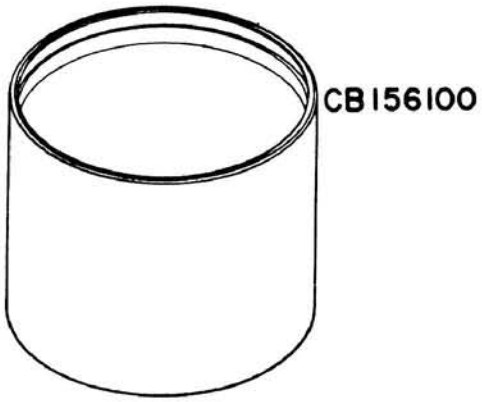

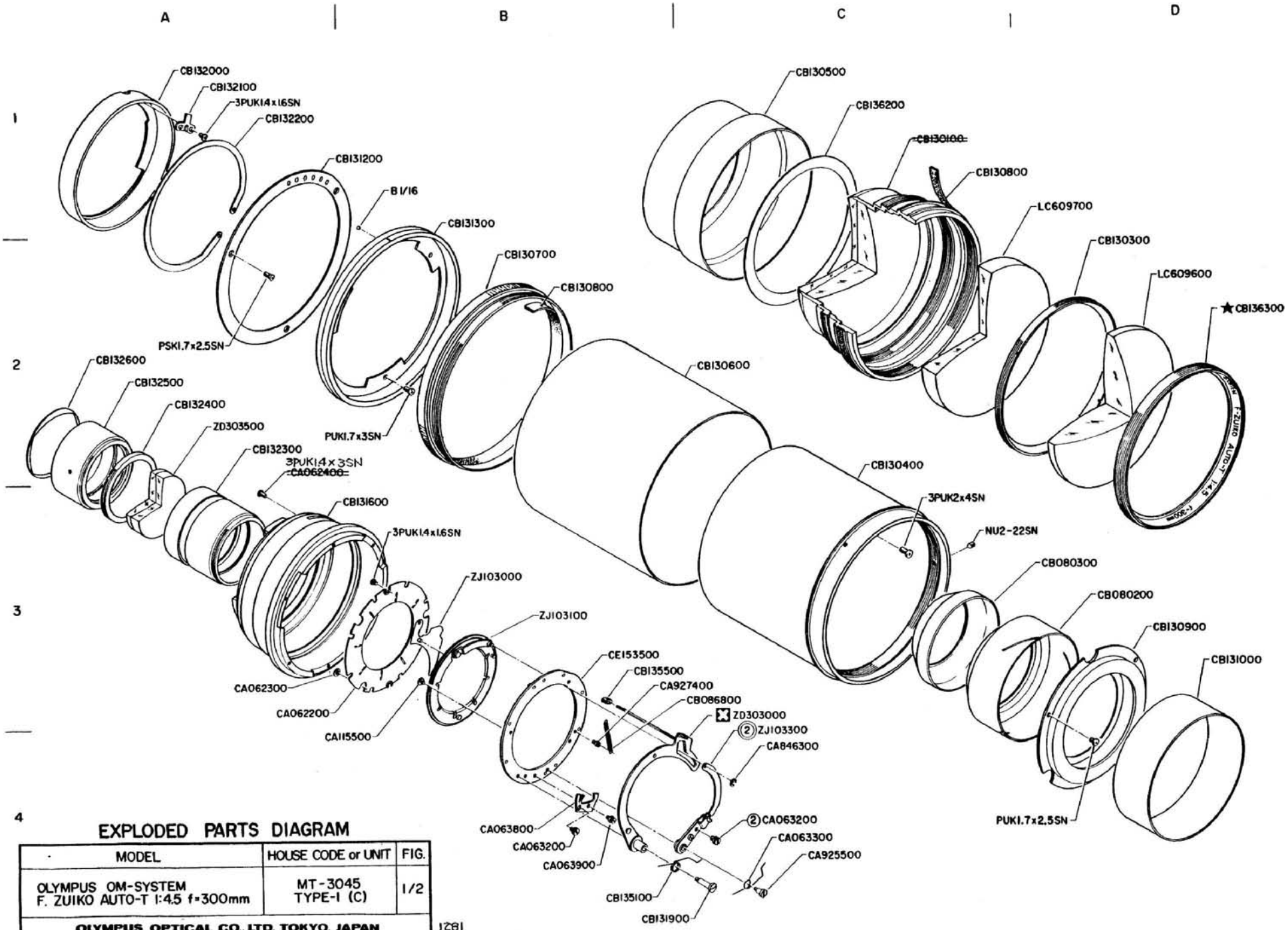

EXPLODED PARTS DIAGRAM

MODEL	HOUSE CODE or UNIT	FIG.
OLYMPUS OM-SYSTEM F. ZUIKO AUTO-T 1:4.5 f=300mm	MT-3045 TYPE-1 (C)	1/2
OLYMPUS OPTICAL CO., LTD. TOKYO, JAPAN		

1281
-0481-

NOTE: WHEN ORDERING FOR SPARE PARTS, PLEASE CLARIFY A MODEL, PARTS NUMBER AND QUANTITY

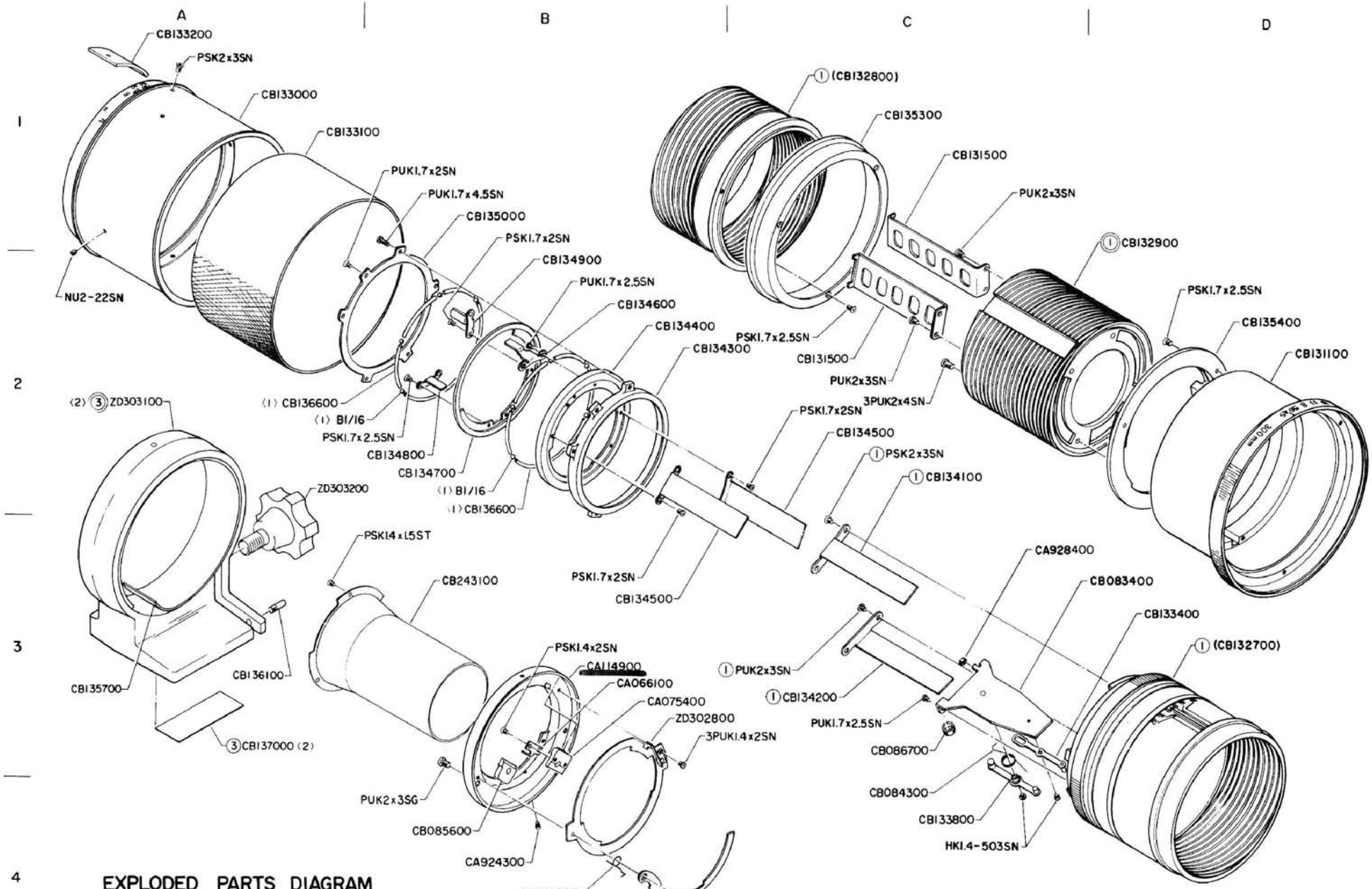

EXPLODED PARTS DIAGRAM

MODEL	HOUSE CODE or UNIT	FIG.
OLYMPUS OM-SYSTEM F.ZUIKO AUTO T 1:4.5 f=300mm	MT-3045 TYPE-1 (C)	2/2
OLYMPUS OPTICAL CO., LTD. TOKYO, JAPAN		

0481

NOTE: WHEN ORDERING FOR SPARE PARTS, PLEASE CLARIFY A MODEL, PARTS NUMBER AND QUANTITY

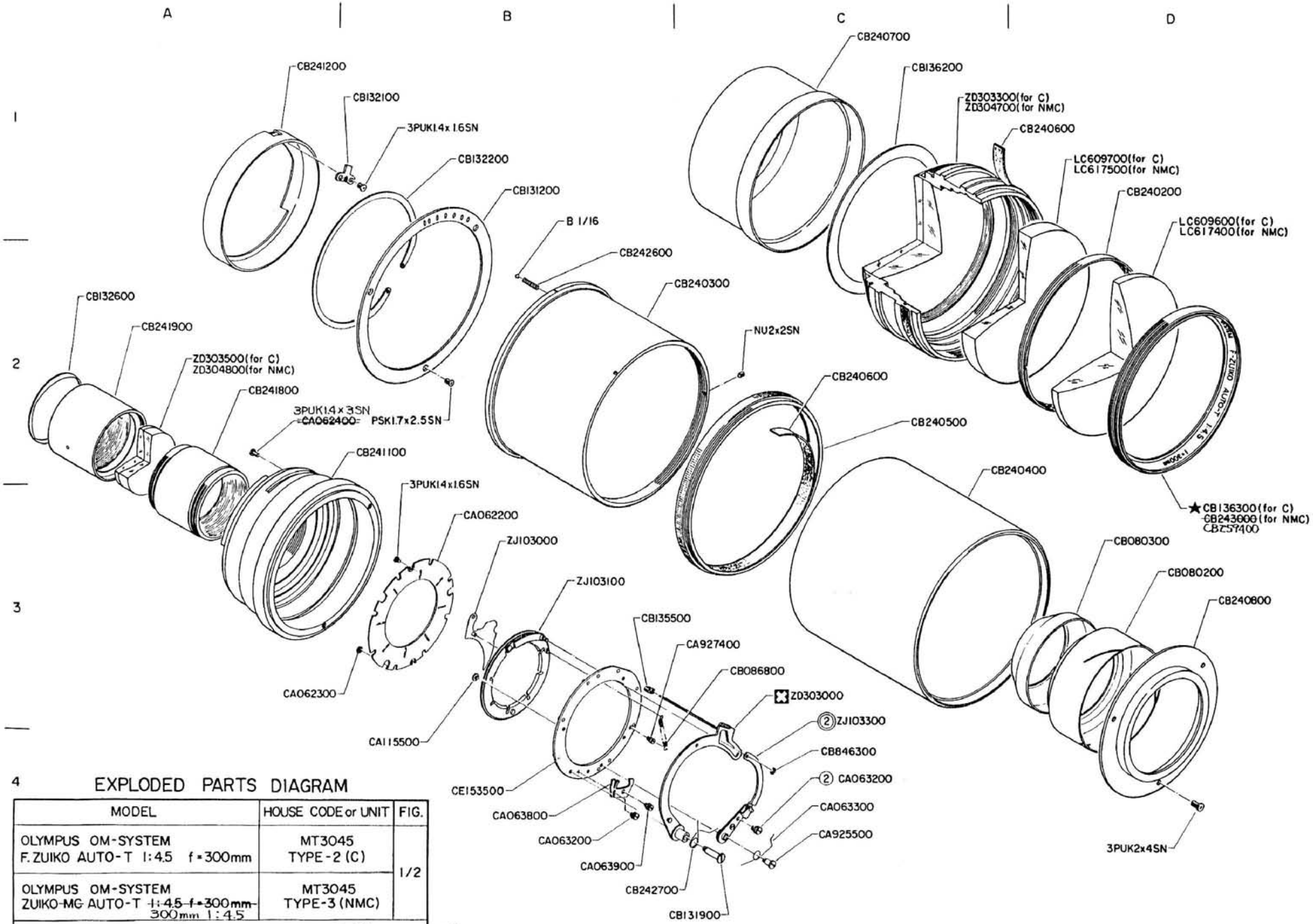

EXPLODED PARTS DIAGRAM

MODEL	HOUSE CODE or UNIT	FIG.
OLYMPUS OM-SYSTEM F.ZUIKO AUTO-T 1:4.5 f=300mm	MT3045 TYPE-2 (C)	1/2
OLYMPUS OM-SYSTEM ZUIKO-MC AUTO-T ~~1:4.5 f=300mm~~ 300mm 1:4.5	MT3045 TYPE-3 (NMC)	
OLYMPUS OPTICAL CO., LTD. TOKYO, JAPAN		

0681
~~0481~~

NOTE WHEN ORDERING FOR SPARE PARTS, PLEASE CLARIFY A MODEL, PARTS NUMBER AND QUANTITY.

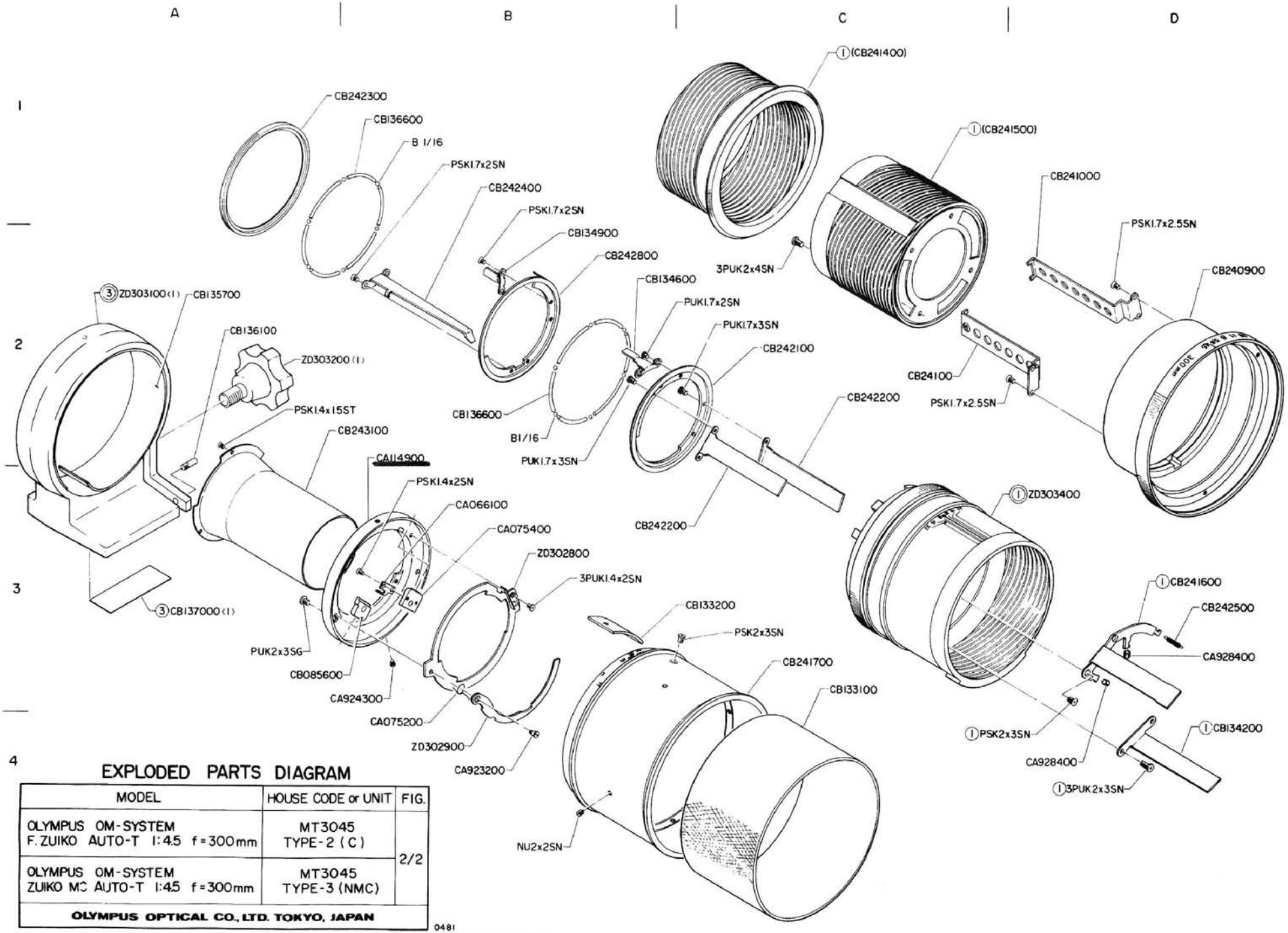

EXPLODED PARTS DIAGRAM

MODEL	HOUSE CODE or UNIT	FIG.
OLYMPUS OM-SYSTEM F.ZUIKO AUTO-T 1:4.5 f=300mm	MT3045 TYPE-2 (C)	2/2
OLYMPUS OM-SYSTEM ZUIKO MC AUTO-T 1:4.5 f=300mm	MT3045 TYPE-3 (NMC)	
OLYMPUS OPTICAL CO., LTD. TOKYO, JAPAN		

0481

NOTE: WHEN ORDERING FOR SPARE PARTS, PLEASE CLARIFY A MODEL, PARTS NUMBER AND QUANTITY.

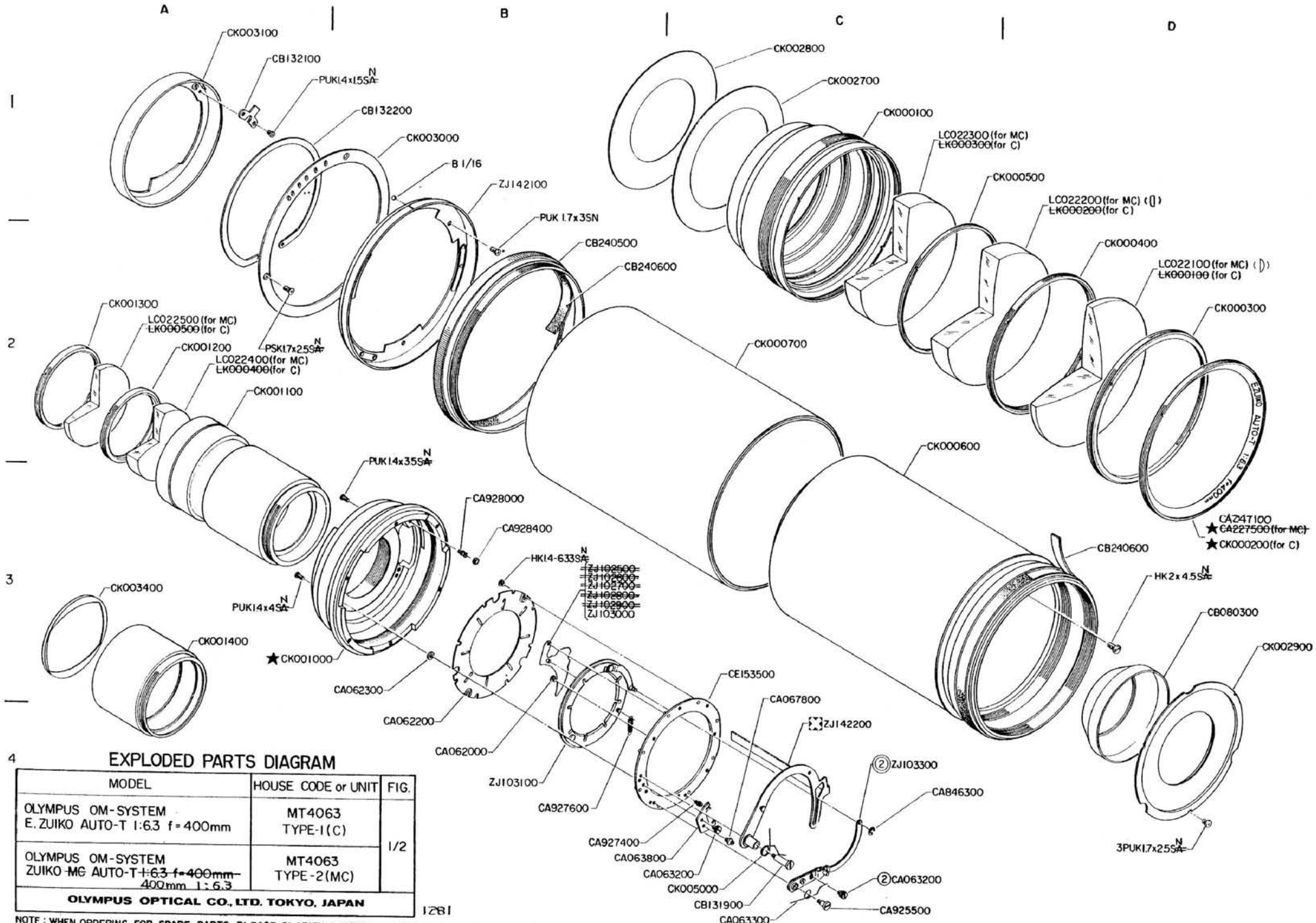

EXPLODED PARTS DIAGRAM

MODEL	HOUSE CODE or UNIT	FIG.
OLYMPUS OM-SYSTEM E. ZUIKO AUTO-T 1:6.3 f=400mm	MT4063 TYPE-1(C)	1/2
OLYMPUS OM-SYSTEM ZUIKO MC AUTO-T ~~1:6.3 f=400mm~~ 400mm 1:6.3	MT4063 TYPE-2(MC)	
OLYMPUS OPTICAL CO., LTD. TOKYO, JAPAN		

1281

NOTE : WHEN ORDERING FOR SPARE PARTS, PLEASE CLARIFY A MODEL or HOUSE CODE, PARTS NUMBER AND QUANTITY.

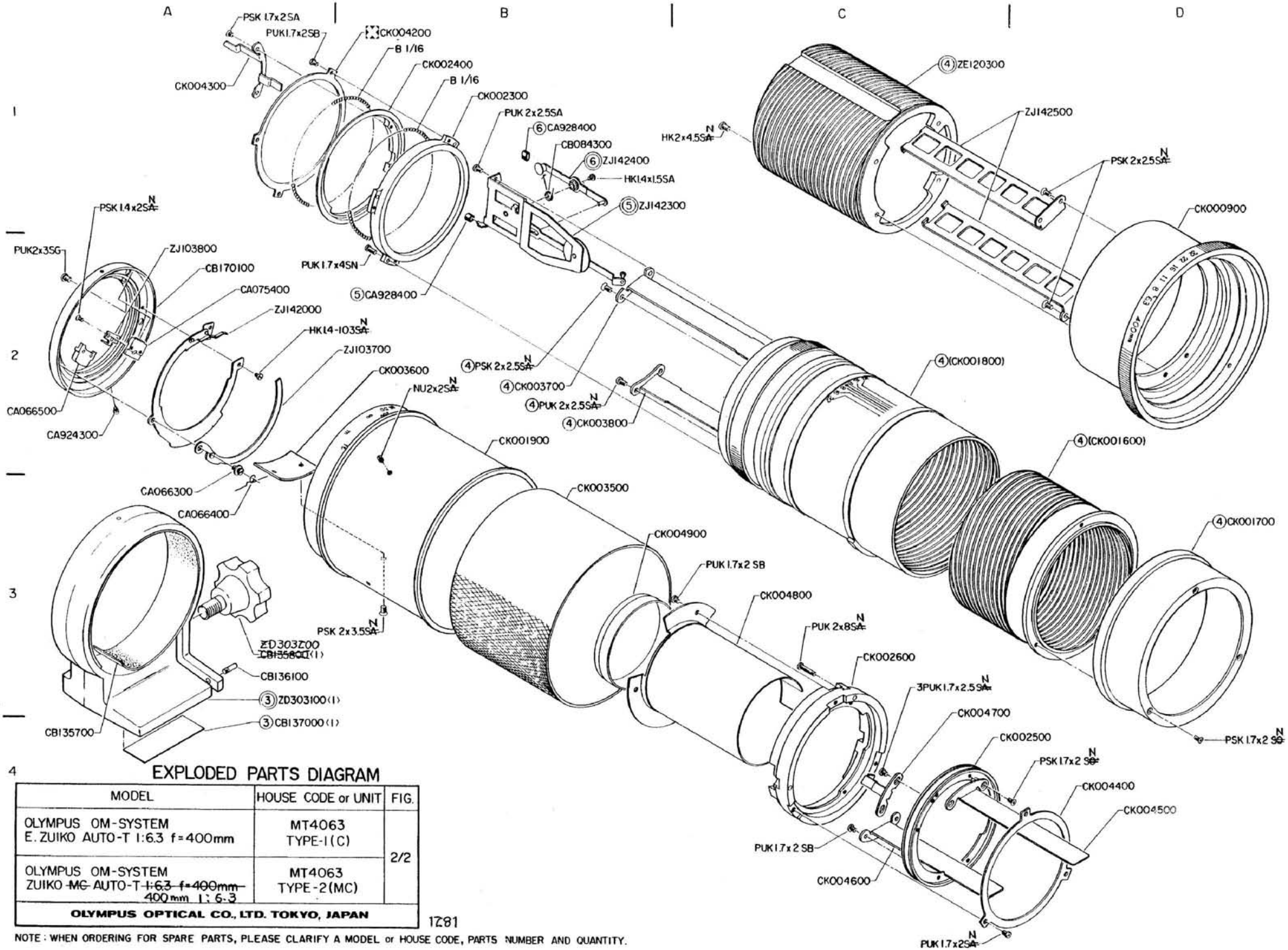

EXPLODED PARTS DIAGRAM

MODEL	HOUSE CODE or UNIT	FIG.
OLYMPUS OM-SYSTEM E. ZUIKO AUTO-T 1:6.3 f=400mm	MT4063 TYPE-1(C)	2/2
OLYMPUS OM-SYSTEM ZUIKO ~~MC~~ AUTO-T ~~1:6.3 f=400mm~~ 400mm 1:6.3	MT4063 TYPE-2(MC)	
OLYMPUS OPTICAL CO., LTD. TOKYO, JAPAN		

1781

NOTE: WHEN ORDERING FOR SPARE PARTS, PLEASE CLARIFY A MODEL or HOUSE CODE, PARTS NUMBER AND QUANTITY.

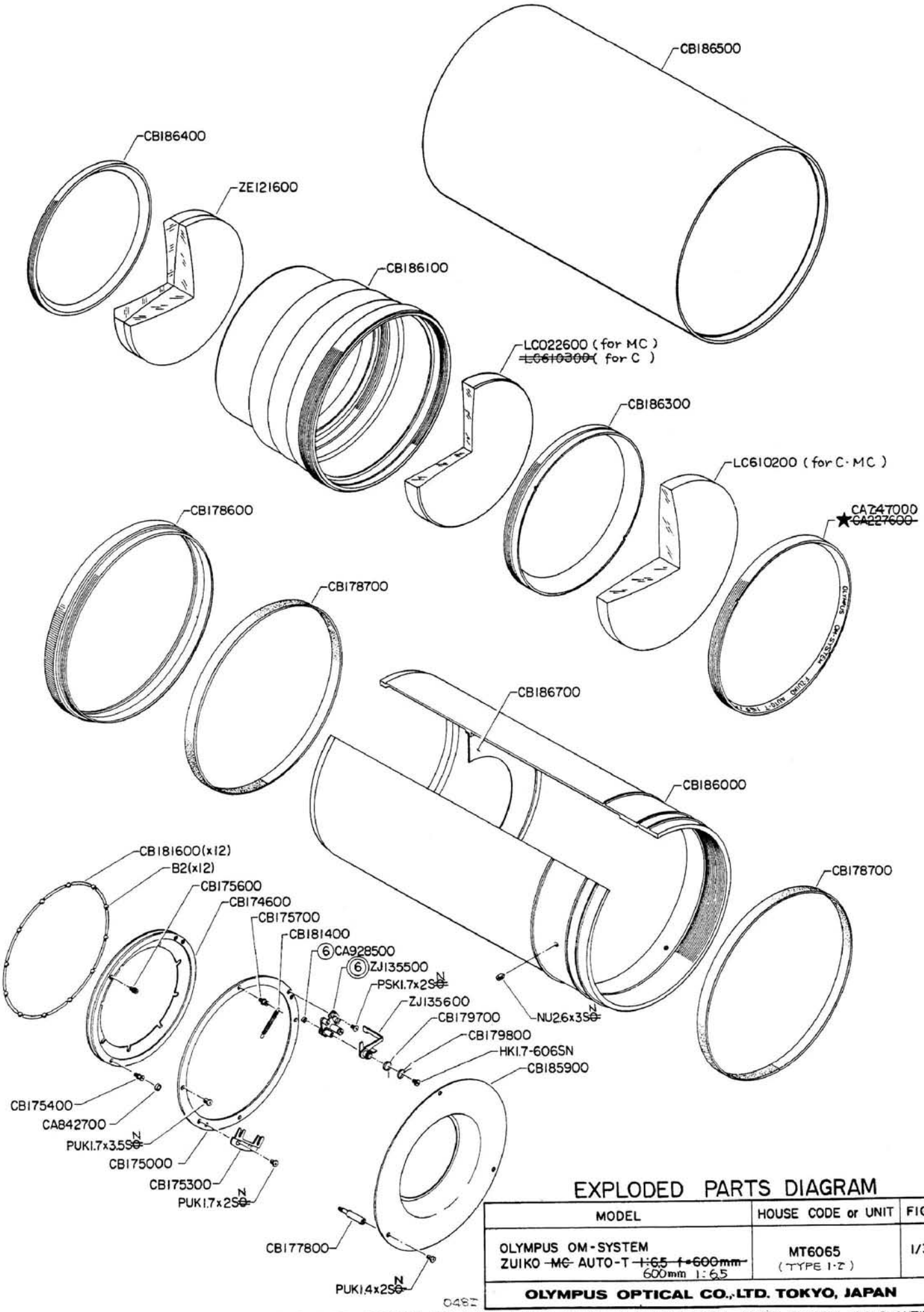

EXPLODED PARTS DIAGRAM

MODEL	HOUSE CODE or UNIT	FIG.
OLYMPUS OM-SYSTEM ZUIKO ~~MC~~ AUTO-T ~~1:6.5 f=600mm~~ 600mm 1:6.5	MT6065 (TYPE 1-2)	1/3
OLYMPUS OPTICAL CO., LTD. TOKYO, JAPAN		

0482

NOTE: WHEN ORDERING FOR SPARE PARTS, PLEASE CLARIFY A MODEL, PARTS NUMBER AND QUANTITY.

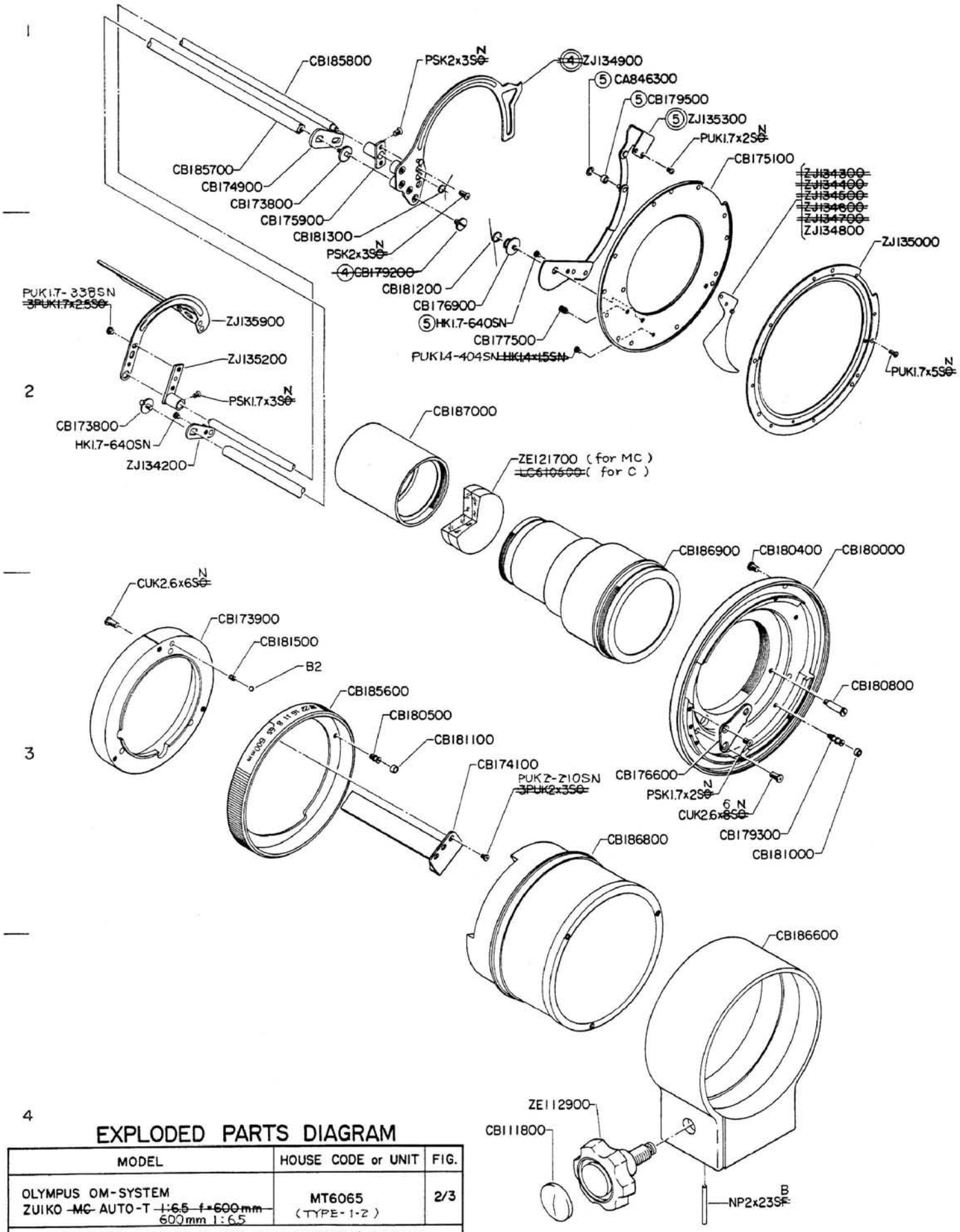

EXPLODED PARTS DIAGRAM

MODEL	HOUSE CODE or UNIT	FIG.
OLYMPUS OM-SYSTEM ZUIKO ~~MC~~ AUTO-T ~~1:6.5 f=600mm~~ 600mm 1:6.5	MT6065 (TYPE-1-2)	2/3
OLYMPUS OPTICAL CO., LTD. TOKYO, JAPAN		

0482

NOTE: WHEN ORDERING FOR SPARE PARTS, PLEASE CLARIFY A MODEL, PARTS NUMBER AND QUANTITY.

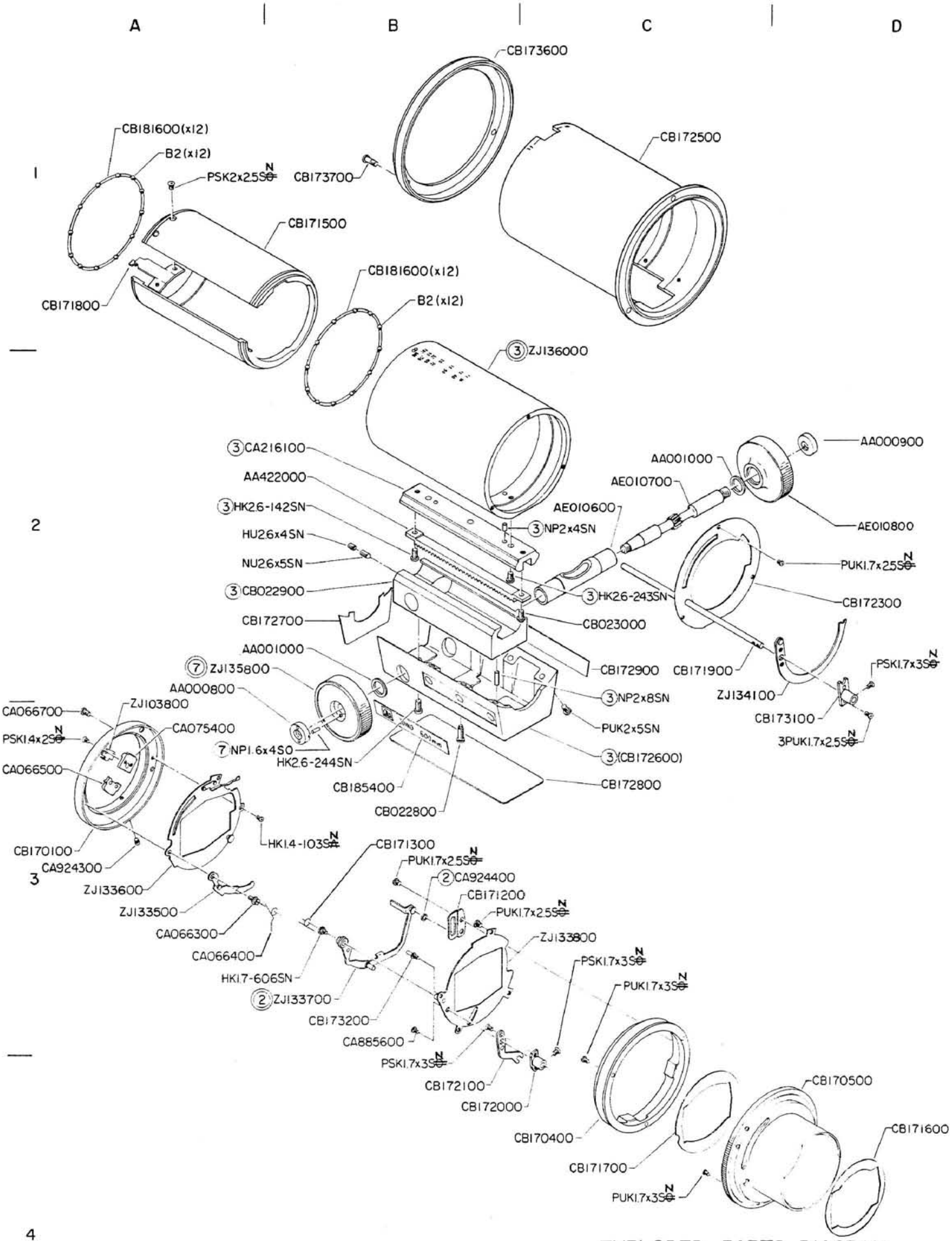

EXPLODED PARTS DIAGRAM

MODEL	HOUSE CODE or UNIT	FIG.
OLYMPUS OM-SYSTEM ZUIKO ~~MC~~ AUTO-T ~~1:6.5 f=600mm~~ 600mm 1:6.5	MT6065 U	3/3
OLYMPUS OPTICAL CO., LTD. TOKYO, JAPAN		

1281

NOTE: WHEN ORDERING FOR SPARE PARTS, PLEASE CLARIFY A MODEL, PARTS NUMBER AND QUANTITY.

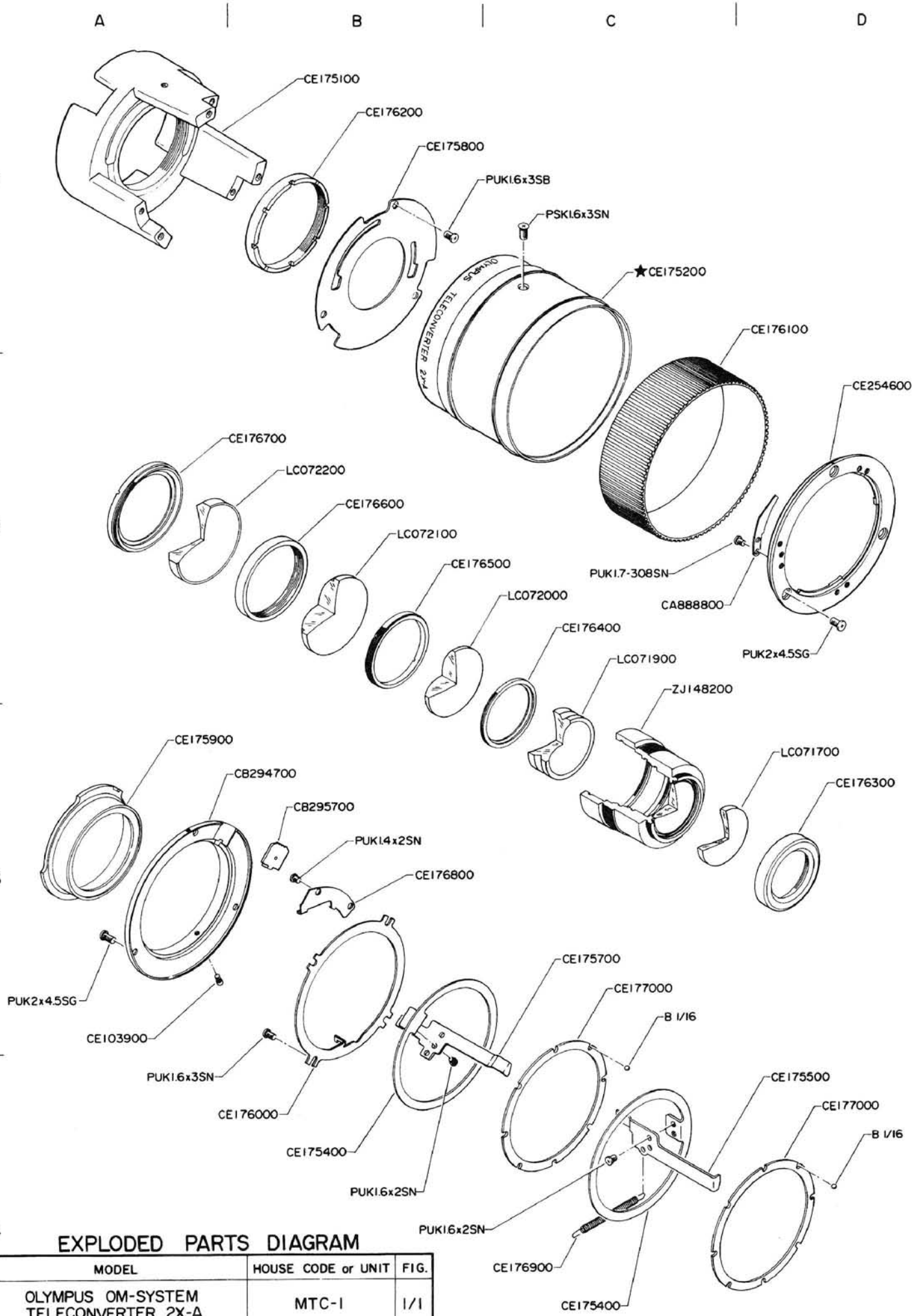

EXPLODED PARTS DIAGRAM

MODEL	HOUSE CODE or UNIT	FIG.
OLYMPUS OM-SYSTEM TELECONVERTER 2X-A	MTC-1	1/1
OLYMPUS OPTICAL CO., LTD. TOKYO, JAPAN		

0381

NOTE : WHEN ORDERING FOR SPARE PARTS, PLEASE CLARIFY A MODEL or HOUSE CODE, PARTS NUMBER AND QUANTITY.