SERVICE MANUAL

DYNAX 5D
MAXXUM 5D
α SWEET DIGITAL
α 5 DIGITAL

COMMON MODEL:

DYNAX 5D	PEU/PHK/PAS/PAU/Mid-East-India/ Korea/Iran-Sylia	(2186-100)
MAXXUM 5D	PUSA/ PCA/South-America/Taiwan	(2186-300)
α SWEET DIGITAL (Black)	PJ	(2186-600)
α SWEET DIGITAL (Silver)	PJ	(2186-650)
α 5 DIGITAL	PMSH-SKD model	(2186-090)

TECHNICAL ILLUSTRATION

PARTS NOTICE WITH PARTS LIST

TECHNICAL REPAIR MANUAL

KONICA MINOLTA PHOTO IMAGING, INC.

2186 Service Manual Index	Code QS FA9220-2186-01	Page 1

Division	Camera CS Division
Completed	September 30, 2005

Approved by	Verified by	Written by
Yata		Ueno

Section/TTL number of pages		
1	Service Manual Index	1
2	Specifications	1
3	Parts List Index	3
4	Parts List	12
5	Repair Guide	62
6	Trouble-Shooting Chart	9
7	Check List	8

Revision History

Date of issue/Version	Reason (Revision part)	Approved by	Verified by	Written by
26/08/2005	First issued	Yata		Masuda Ueno
13/09/2005	Error correction (pg. 21,35,40,43,44,45,56,62 Repair Guide)	Yata		Masuda Ueno
30/09/2005	Error correction (pg. 12 Parts List) LCD HARNESS (0442) (RED and BLUE reverse-putting)	Yata		Ueno

Specifications

Type	Type	Interchangeable-lens digital SLR camera
Camera block	Number of effective pixels	Approx. 6.1 million (3016x2008)
	CCD	23.5mm x 15.7mm (APS-C size equivalent) Interline primary-color, interlace scan Total pixels: 6.3 million
	Unit cell size	7.8 m x 7.8 m
Recording block	Recording media	Type I and Type II CompactFlash cards, Microdrive, SD memory card/ MultiMedia Card (with SD-CF1 in use)
	File format	JPEG/ RAW/ RAW+JPEG [DCF 2.0 compliant, DPOF (supported by printing functions in ver. 1.1), Exif 2.21]
	Number of recorded pixels	L: 3008x2000, M: 2256x1496, S: 1504x1000
	Image quality modes	Standard, Fine, Extra-Fine, RAW, Raw+JPEG (Fine)
Viewfinder	Viewfinder type	Eye-level fixed pentaprism (Roof mirror type pentaprism (silver evaporated))
LCD/Indication	LCD monitor	2.5 inch low-temperature polysilicon TFT color, back light LCD (with 3 fluoresent lamps) Total pixels: 115,000 (approx.)
Focus	Autofocus system	TTL phase-detection system with CCD line sensors (9 points 8 lines with center cross-hair sensor)
	Autofocus area	Wide focus area, Any local focus area is selectable from 9 points sensors
Exposure	Exposure mode	P/ Auto mode (Programmed AE with program shift), A (Aperture priority), S (Shutter priority), M (Manual)
	Metering	TTL Metering using 14 segment. Honeycomb-pattern SPC. (14 segments Honeycomb-pattern/ Center-weighted, Spot metering)
	Exposure compensation	+/-2 Ev in 1/3 increments
	Camera sensitivity	Auto and 100, 200, 400, 800, 1600 and 3200 ISO equivalents.
	Shutter	Electronically-controlled, vertical-traverse, focal-plane shutter
	Shutter speed range	30s - 1/4000s, Bulb Flash sync.: 1/160s (Anti-shake OFF), 1/125 (Anti-shake ON)
Flash	Flash metering	ADI, Pre-flash TTL, Manual flash control
	Guide number	12 (in meters at ISO 100)
	Flash compensation	+/-2 Ev in 1/3 increments
Recording Playback Others	White balance control	Automatic, Preset (Daylight, Shade, Cloudy, Flash, Tungsten, Fluorescent), Custom, Color temparature (Color temparature: 2500 to 9900K, CC Filter: 19 levels (M9 to G9)
	Continuous advance	Approx. 3 fps, Maximum 5 frames (RAW) (Maximum 3 frames (RAW+JPEG))
	Color modes / Color space	sRGB, Adobe RGB, Adobe RGB (ICC)
	Image correction	Color mode/ DEC (Digital Effect Control) function (*1): 10 modes (Natural Color, Natural Plus, Portrait, Landscape, Sunset, Night view, Night portrait, B/W, AdobeRGB, AdobeRGB (ICC)). The contrast, color saturation, sharpness are also manually adjustable in +/- 2 steps. (*2) (*3) *1: With this function, color space and settings of image processing such as contrast, saturation, sharpness, white balance and a like will be controlled automatically. *2: When B/W is selected in color mode, optional setting of color saturation is disabled. *3: When Zone matching is selected, optional setting of contrast disabled.
	Playback functions	Single-frame (Image only, Image and various statuses, Image and various statuses and Histogram), Index (Selectable from 4/9/16 frames), Enlarged playback (Up to approx 5x), Luminance limit display, File browser, Slideshow, Auto Rotation playback (ON/OFF selectable)
	Printing output control	Exif Print, Print Image Matching III, PictBridge
Power/Battery	Battery	One NP-400 lithium-ion battery
	Battery performance (still)	Approx. number of recorded image: 400 frames. (Conforming to CIPA standard test method with a compact flash card and NP-400 lithium-ion battery) *1 CIPA: Camera & Imaging Products Association
Input/Output	PC interface	USB (Full-speed 12Mbps data transfer available with USB 2.0 compatible computer)
	AV output	NTSC/PAL (selectable on the camera)
Dimensions Weight	Dimensions (WxHxD)	130.5 (W) x 92.5 (H) x 66.5 (D) mm
	Weight	575g (approx.) without batteries or recording media

INDEX

INDEX

INDEX

01(2186)

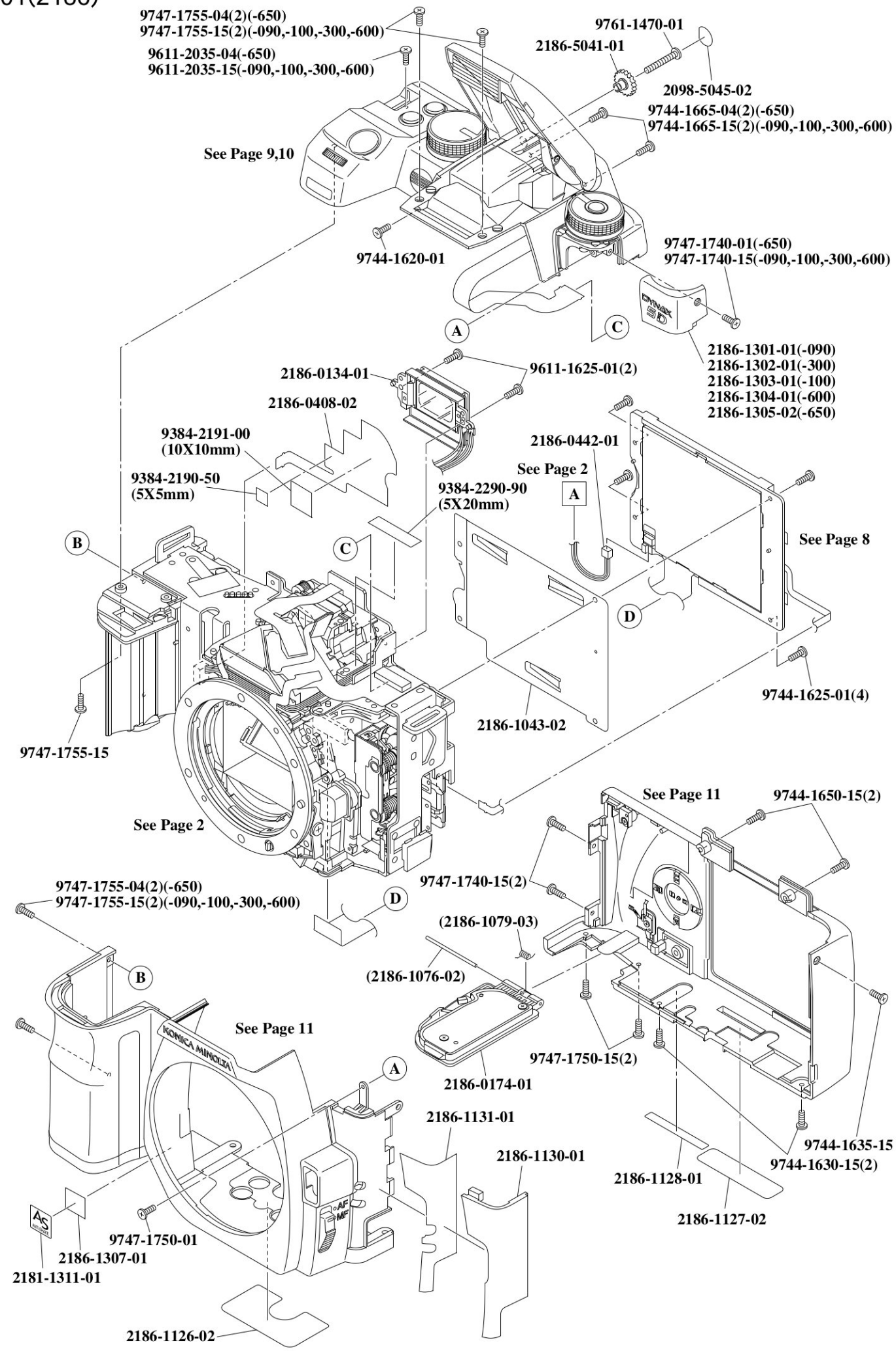
9747-1755-04(2)(-650)
9747-1755-15(2)(-090,-100,-300,-600)
9611-2035-04(-650)
9611-2035-15(-090,-100,-300,-600)
9761-1470-01
2186-5041-01
2098-5045-02
9744-1665-04(2)(-650)
9744-1665-15(2)(-090,-100,-300,-600)
See Page 9,10
9744-1620-01
9747-1740-01(-650)
9747-1740-15(-090,-100,-300,-600)
A
C
2186-1301-01(-090)
2186-1302-01(-300)
2186-1303-01(-100)
2186-1304-01(-600)
2186-1305-02(-650)
2186-0134-01
9611-1625-01(2)
2186-0408-02
9384-2191-00
(10X10mm)
9384-2190-50
(5X5mm)
2186-0442-01
See Page 2
A
9384-2290-90
(5X20mm)
B
C
See Page 8
D
9744-1625-01(4)
2186-1043-02
9747-1755-15
See Page 2
See Page 11
9744-1650-15(2)
9747-1740-15(2)
9747-1755-04(2)(-650)
9747-1755-15(2)(-090,-100,-300,-600)
D
(2186-1079-03)
(2186-1076-02)
B
See Page 11
KONICA MINOLTA
A
9747-1750-15(2)
2186-0174-01
2186-1131-01
2186-1130-01
9744-1635-15
9744-1630-15(2)
2186-1128-01
2186-1127-02
AF
MF
9747-1750-01
2186-1307-01
2181-1311-01
2186-1126-02

PART NO	PART NAME		QTY.
2186-0134-01	EYE PIECE FRAME ASSY	接眼枠セット	1
2186-0174-01	BATTERY COVER ASSY	電池蓋セット	1
(2186-1076-02)	BATTERY COVER HINGE SHAFT	電池蓋ヒンジ軸	1
(2186-1079-03)	BATTERY COVER SP	電池蓋ＳＰ	1
2186-0408-02	SW FPC-1 ASSY	ＳＷフレキ１セット	1
2186-0442-01	LCD HARNESS	ＬＣＤハーネス	1
2186-1043-02	LCD GND PLATE	ＬＣＤ　ＧＮＤ板	1
2186-1126-02	STANDARD PLATE	定格銘板	1
2186-1127-02	PLACE PLATE MALAYSIA	生産地銘板	1
2186-1128-01	BODY NO.PLATE	ボディＮｏ．銘板	1
2186-1130-01	RUBBER L	貼り皮Ｌ	1
2186-1131-01	RUBBER L TAPE	貼り皮Ｌテープ	1
2186-1301-01	VERSION PLT A - 5	バージョン銘板□－５	
2186-1302-01	VERSION PLT MAXXUM - 5	バージョン銘板ＭＵＸＸＵＭ－５	
2186-1303-01	VERSION PLT DYNAX - 5	バージョン銘板ＤＹＮＡＸ－５	1
2186-1304-01	VERSION PLT A - SWEET	バージョン銘板□－ＳＷＥＥＴ	
2186-1305-02	VERSION PLT A - SWEET	バージョン銘板□－ＳＷＥＥＴ	
2186-1307-01	AS NAME PLT D/SIDED TAPE	ＡＳ銘板貼付けテープ	1
2181-1311-01	SHAKING PLATE	手振れ銘板	1
2186-5041-01	DIOPTER DIAL	視度調ダイヤル	1
2098-5045-02	DIOPTER-ADJUST SHEET	視度調銘板	1
9384-2190-50	DOUBLE-FACED TAPE (PER ROLL)	両面テープ	1
9384-2191-00	DOUBLE-FACED TAPE (PER ROLL)	両面テープ	1
9384-2290-90	POLYESTER TAPE (PER ROLL/60M) YELLOW	ポリエステルテープ	1
9611-1625-01	SCREW	ねじ	2
9611-2035-04	SCREW (-650)	ねじ	1
9611-2035-15	SCREW (-090, -100, -300, -600)	ねじ	1
9744-1620-01	SCREW	ねじ	1
9744-1625-01	SCREW	ねじ	4
9744-1630-15	SCREW	ねじ	2
9744-1635-15	SCREW	ねじ	1
9744-1650-15	SCREW	ねじ	2
9744-1665-04	SCREW (-650)	ねじ	2
9744-1665-15	SCREW (-090, -100, -300, -600)	ねじ	2
9747-1740-01	SCREW (-650)	ねじ	1
9747-1740-15	SCREW (-650)	ねじ	2
9747-1740-15	SCREW (-090, -100, -300, -600)	ねじ	3
9747-1750-01	SCREW	ねじ	1
9747-1750-15	SCREW	ねじ	2
9747-1755-04	SCREW (-650)	ねじ	4
9747-1755-15	SCREW (-650)	ねじ	1
9747-1755-15	SCREW (-090, -100, -300, -600)	ねじ	5
9761-1470-01	SCREW	ねじ	1

02(2186)

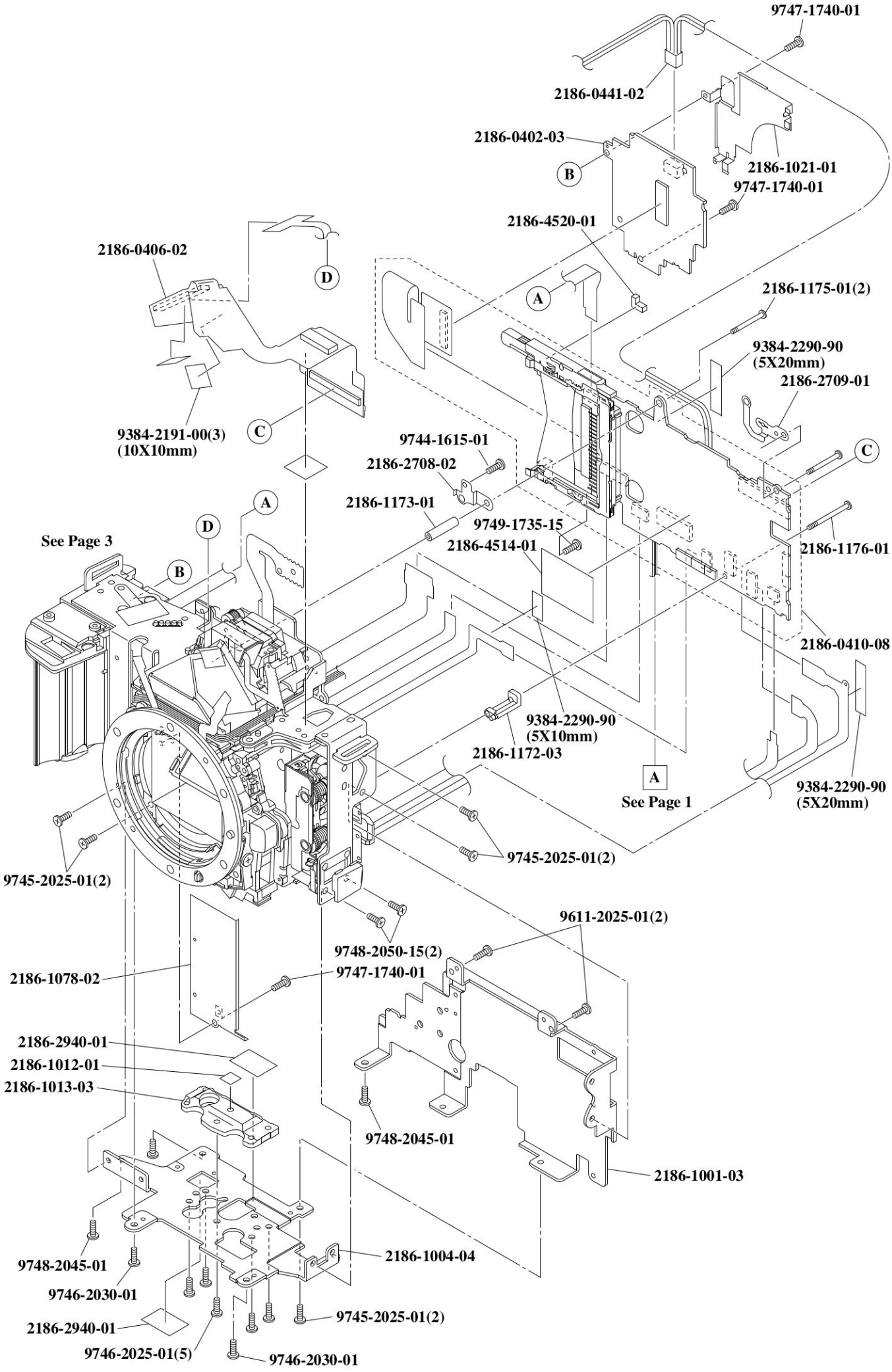
9747-1740-01
2186-0441-02
2186-0402-03
B
2186-1021-01
9747-1740-01
2186-4520-01
2186-0406-02
D
A
2186-1175-01(2)
9384-2290-90
(5X20mm)
2186-2709-01
9384-2191-00(3)
(10X10mm)
C
9744-1615-01
2186-2708-02
C
A
2186-1173-01
D
9749-1735-15
See Page 3
2186-4514-01
2186-1176-01
B
2186-0410-08
9384-2290-90
(5X10mm)
2186-1172-03
A
See Page 1
9384-2290-90
(5X20mm)
9745-2025-01(2)
9745-2025-01(2)
9611-2025-01(2)
9748-2050-15(2)
2186-1078-02
9747-1740-01
2186-2940-01
2186-1012-01
2186-1013-03
9748-2045-01
2186-1001-03
9748-2045-01
2186-1004-04
9746-2030-01
9745-2025-01(2)
2186-2940-01
9746-2025-01(5)
9746-2030-01

PART NO	PART NAME		QTY.
2186-0402-03	DCDC PCB ASSY	電源基板セット	1
2186-0406-02	I/O FPC ASSY	Ｉ／Ｏフレキセット	1
2186-0410-08	MAIN PCB ASSY	メイン基板セット	1
2186-0441-02	POWER SUPPLY HARNESS	電源ハーネス	1
2186-1001-03	MAIN CHASSIS	メインシャーシ	1
2186-1004-04	BOTTOM MAIN PLATE	下面シャーシ	1
2186-1012-01	TRIPOD LIGHT LEAK TAPE	三脚遮光テープ	1
2186-1013-03	TRIPOD SCREW	三脚ねじ	1
2186-1021-01	SHIELD PLATE	シールド板	1
2186-1078-02	CCD FPC PRESSING SHEET	ＣＣＤフレキ押えシート	1
2186-1172-03	MAIN BOARD SUPPORT PLATE B	メイン基板保持台Ｂ	1
2186-1173-01	MAIN BOARD SUPPORT PLATE AXIS	メイン基板保持軸	1
2186-1175-01	MAIN PCB HOLDING SCREW A	メイン基板保持ねじＡ	2
2186-1176-01	MAIN PCB HOLDING SCREW B	メイン基板保持ねじＢ	1
2186-2708-02	CCD PLATE LUG PLATE 1	ＣＣＤシャーシ用ラグ板１	1
2186-2709-01	CCD PLATE RAG PLATE 2	ＣＣＤシャーシ用ラグ板２	1
2186-2940-01	TAPE	テープ	2
2186-4514-01	SHIELD FPC	シールドフレキ	1
2186-4520-01	ACCESS LIGHT SHIELD TAPE	アクセス遮光シート	1
9384-2191-00	DOUBLE-FACED TAPE (PER ROLL)	両面テープ	3
9384-2290-90	POLYESTER TAPE (PER ROLL/60M) YELLOW	ポリエステルテープ	3
9611-2025-01	SCREW	ねじ	2
9744-1615-01	SCREW	ねじ	1
9745-2025-01	SCREW	ねじ	6
9746-2025-01	SCREW	ねじ	5
9746-2030-01	SCREW	ねじ	2
9747-1740-01	SCREW	ねじ	3
9748-2045-01	SCREW	ねじ	2
9748-2050-15	SCREW	ねじ	2
9749-1735-15	SCREW	ねじ	1

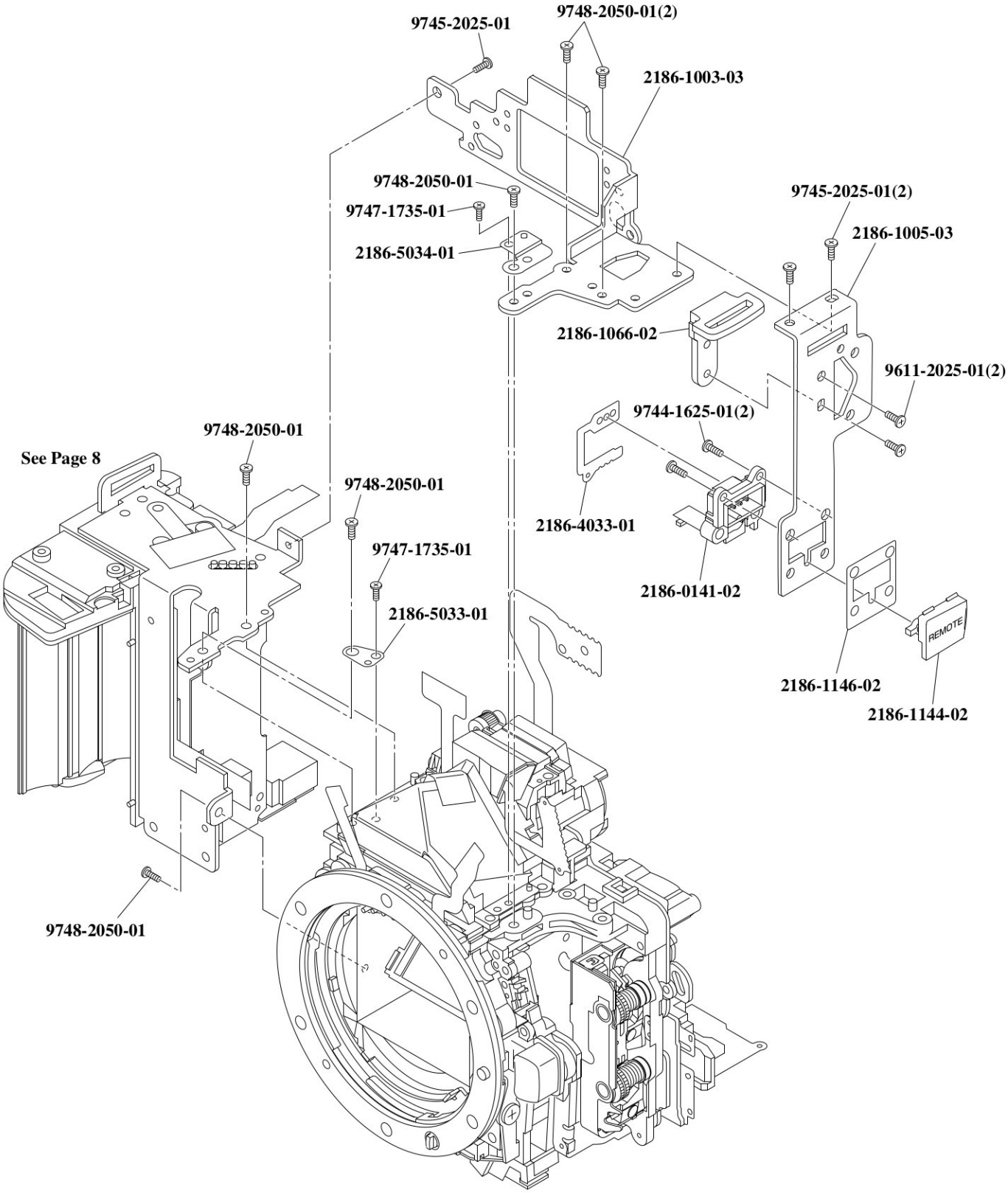
9745-2025-01
9748-2050-01(2)
2186-1003-03
9748-2050-01
9747-1735-01
2186-5034-01
9745-2025-01(2)
2186-1005-03
2186-1066-02
9611-2025-01(2)
9744-1625-01(2)
9748-2050-01
See Page 8
9748-2050-01
2186-4033-01
9747-1735-01
2186-0141-02
2186-5033-01
REMOTE
2186-1146-02
2186-1144-02
9748-2050-01

See Page 5,6,7

PART NO	PART NAME		QTY.
2186-0141-02	REMOTE TERMINAL HOLDER ASSY	リモートホルダーセット	1
2186-1003-03	SUS PLATE L	シャーシL	1
2186-1005-03	EYELET REINFORCEMENT PLATE	吊環補強板	1
2186-1066-02	EYELET L	吊環L	1
2186-1144-02	REMOTE COVER	リモート蓋	1
2186-1146-02	REMOTE SHEET	リモートシート	1
2186-4033-01	REMOTE FPC	リモコンフレキ	1
2186-5033-01	PENTA PROTECTION PLATE RAG PLATE 1	ペンタ保護板用ラグ板1	1
2186-5034-01	PENTA PROTECTION PLATE RAG PLATE 2	ペンタ保護板用ラグ板2	1
9611-2025-01	SCREW	ねじ	2
9744-1625-01	SCREW	ねじ	2
9745-2025-01	SCREW	ねじ	3
9747-1735-01	SCREW	ねじ	2
9748-2050-01	SCREW	ねじ	6

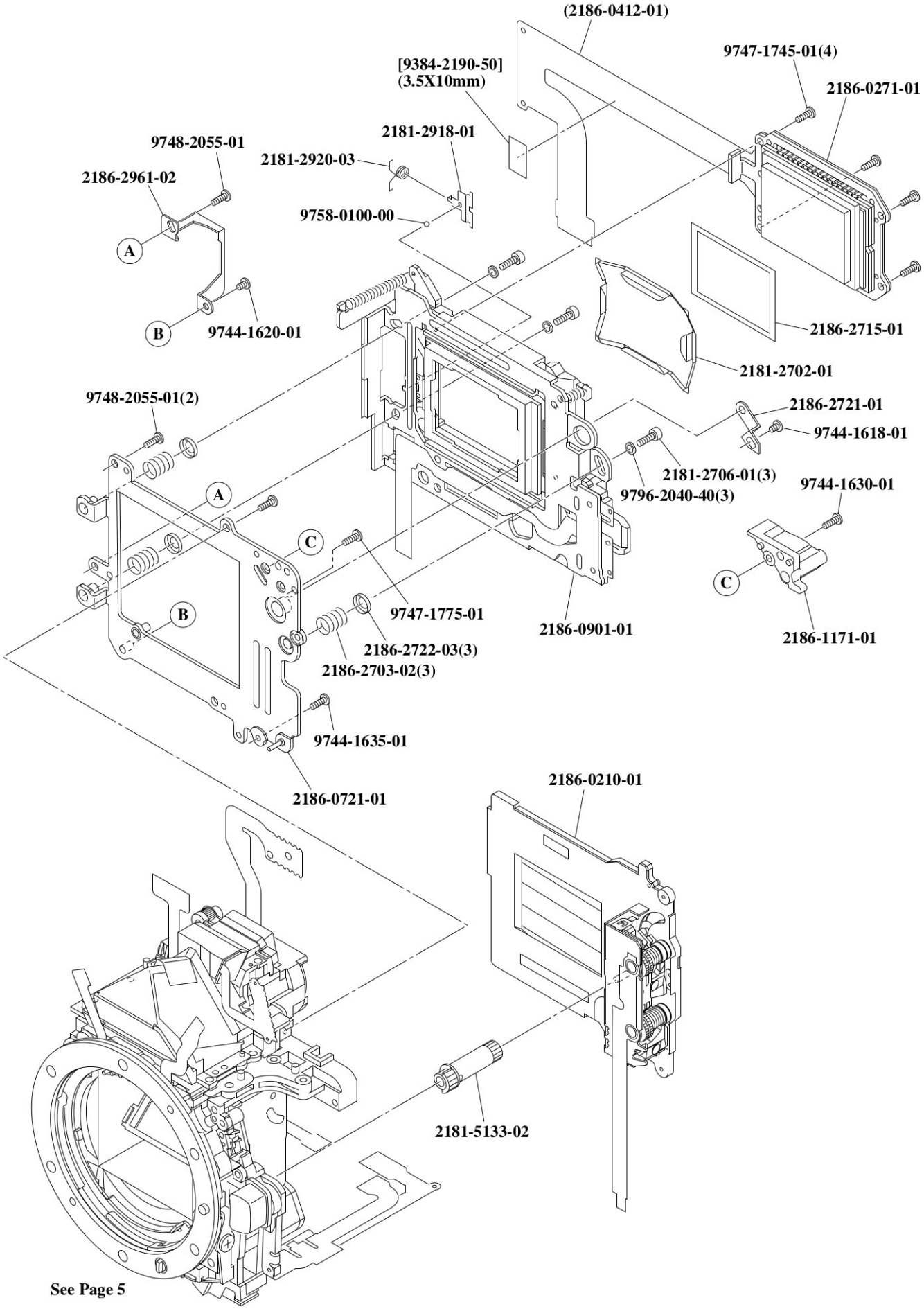
(2186-0412-01)
9747-1745-01(4)
[9384-2190-50]
(3.5X10mm)
2186-0271-01
2181-2918-01
9748-2055-01
2181-2920-03
2186-2961-02
9758-0100-00
A
B
9744-1620-01
2186-2715-01
2181-2702-01
9748-2055-01(2)
2186-2721-01
9744-1618-01
2181-2706-01(3)
9796-2040-40(3)
9744-1630-01
A
C
C
B
9747-1775-01
2186-0901-01
2186-1171-01
2186-2722-03(3)
2186-2703-02(3)
9744-1635-01
2186-0721-01
2186-0210-01
2181-5133-02

See Page 5

PART NO	PART NAME		QTY.
2186-0210-01	SHUTTER ASSY	シャッターセット	1
2186-0271-01	CCD ASSY	ＣＣＤセット	1
(2186-0412-01)	CCD FPC ASSY	ＣＣＤフレキセット	1
(9384-2190-50)	DOUBLE-FACED TAPE (PER ROLL)	両面テープ	1
2186-0721-01	MAIN PLATE ASSY	メイン台板セット	1
2186-0901-01	SLIDER ASSY	スライダーセット	1
2186-1171-01	MAIN BOARD SUPPORT PLATE A	メイン基板保持台Ａ	1
2181-2702-01	LPF PRESSING PLT	ＬＰＦ押え板	1
2186-2703-02	AORI ADJ SPRING	あおり調整ＳＰ	3
2181-2706-01	AORI ADJ SCREW	あおり調整ねじ	3
2186-2715-01	CCD LPF MASK SHEET	ＬＰＦマスクシート	1
2186-2721-01	CCD SLANTING STOPPER	偏心ピンストッパー	1
2186-2722-03	CAP WASHER	あおり調整軸ワッシャ	3
2181-2918-01	CCD UNDER PLATE	ＣＣＤ板	1
2181-2920-03	CCD UNDER PLT SPRING	ＣＣＤ板ＳＰ	1
2186-2961-02	SLIDER STOPPER PLATE	スライダーストップ板	1
2181-5133-02	SHUTTER CHARGE GEAR	シャッターチャージギヤ	1
9744-1618-01	SCREW	ねじ	1
9744-1620-01	SCREW	ねじ	1
9744-1630-01	SCREW	ねじ	1
9744-1635-01	SCREW	ねじ	1
9747-1745-01	SCREW	ねじ	4
9747-1775-01	SCREW	ねじ	1
9748-2055-01	SCREW	ねじ	3
9758-0100-00	STEEL BALL	スチールボール	1
9796-2040-40	WASHER	ワッシャ	3

05(2186)

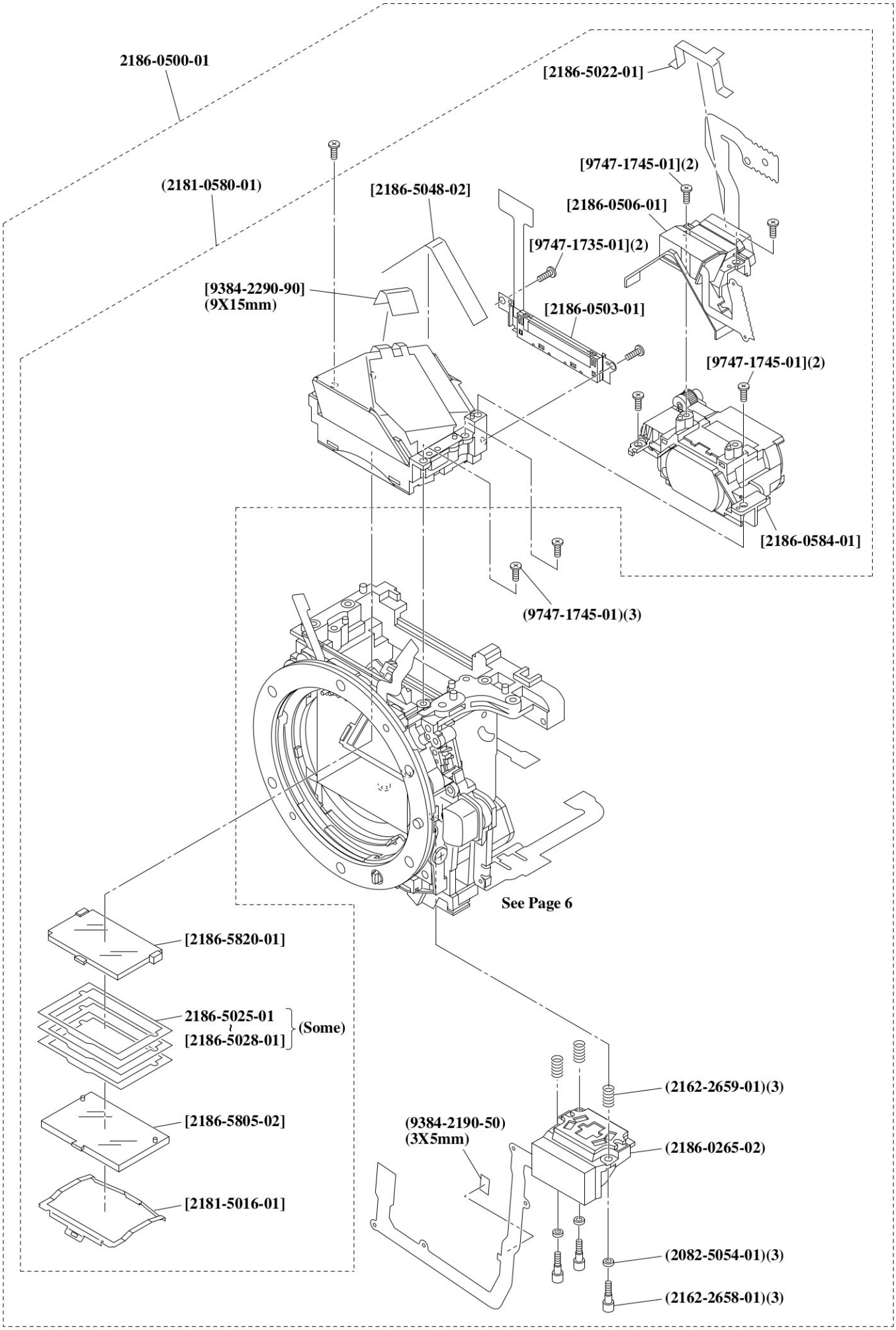
2186-0500-01
[2186-5022-01]
[9747-1745-01](2)
(2181-0580-01)
[2186-5048-02]
[2186-0506-01]
[9747-1735-01](2)
[9384-2290-90]
(9X15mm)
[2186-0503-01]
[9747-1745-01](2)
[2186-0584-01]
(9747-1745-01)(3)
See Page 6
[2186-5820-01]
2186-5025-01
[2186-5028-01]
(Some)
[2186-5805-02]
[2181-5016-01]
(2162-2659-01)(3)
(9384-2190-50)
(3X5mm)
(2186-0265-02)
(2082-5054-01)(3)
(2162-2658-01)(3)

PART NO	PART NAME		QTY.
2186-0500-01	MIRROR BOX ASSY	ミラーボックスセット	1
(2186-0265-02)	AF MODULE ASSY	ＡＦモジュールセット	1
(2186-0580-01)	PENTA ASSY	ペンタセット	1
[2186-0503-01]	INF LCD HOLDER ASSY	ＩＦ　ＬＣＤホルダーセット	1
[2186-0506-01]	TOUKO ASSY	投光セット	1
[2186-0584-01]	DIOPTER ASSY	視度調セット	1
[2181-5016-01]	FRESNAL SPRING	焦点板ＳＰ	1
[2186-5022-01]	SPC LIGHT SHIELD SHEET	ＳＰＣ遮光シート	1
2186-5025-01	VB WASHER A (0.05mm)	ＶＢワッシャＡ	Some
2186-5026-01	VB WASHER B (0.1mm)	ＶＢワッシャＢ	
2186-5027-01	VB WASHER C (0.15mm)	ＶＢワッシャＣ	
[2186-5028-01]	VB WASHER D (STD WASHER) (0.2mm)	ＶＢワッシャＤ	
[2186-5048-02]	PENTA PREVENTION SHEET	ペンタ防塵シート	1
[2186-5805-02]	FRESNAL	焦点板	1
[2186-5820-01]	SI SCREEN	ＳＩスクリーン	1
[9384-2290-90]	POLYESTER TAPE (PER ROLL/60M) YELLOW	ポリエステルテープ	1
[9747-1735-01]	SCREW	ねじ	2
[9747-1745-01]	SCREW	ねじ	4
(2162-2658-01)	AF ADJUSTMENT SCREW	ＡＦ調整ねじ	3
(2162-2659-01)	AF ADJUSTMENT SP	ＡＦ調整ＳＰ	3
(2082-5054-01)	WASHER	ワッシャ	3
(9384-2190-50)	DOUBLE-FACED TAPE (PER ROLL)	両面テープ	1
(9747-1745-01)	SCREW	ねじ	3

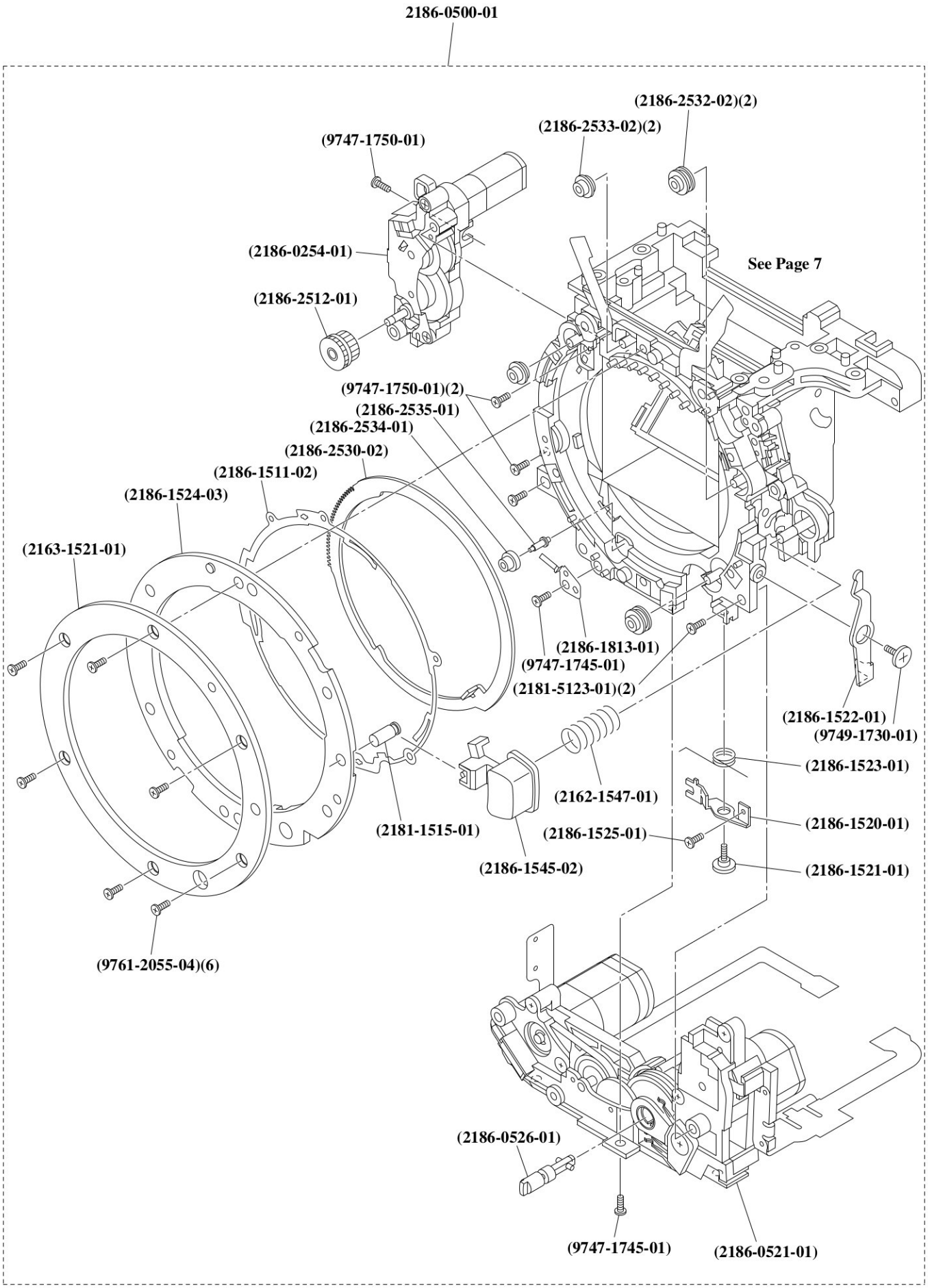
2186-0500-01
(2186-2532-02)(2)
(2186-2533-02)(2)
(9747-1750-01)
(2186-0254-01)
See Page 7
(2186-2512-01)
(9747-1750-01)(2)
(2186-2535-01)
(2186-2534-01)
(2186-2530-02)
(2186-1511-02)
(2186-1524-03)
(2163-1521-01)
(2186-1813-01)
(9747-1745-01)
(2181-5123-01)(2)
(2186-1522-01)
(9749-1730-01)
(2186-1523-01)
(2162-1547-01)
(2186-1520-01)
(2181-1515-01)
(2186-1525-01)
(2186-1545-02)
(2186-1521-01)
(9761-2055-04)(6)
(2186-0526-01)
(9747-1745-01)
(2186-0521-01)

PART NO	PART NAME		QTY.
2186-0500-01	MIRROR BOX ASSY	ミラーボックスセット	1
(2186-0254-01)	APERTURE ASSY	絞り台板セット	1
(2186-0521-01)	AF CHARGE ASSY	ＡＦチャージ台板セット	1
(2186-0526-01)	AF COUPLER ASSY	ＡＦカプラーセット	1
(2186-1511-02)	A-MOUNT SPRING	リングＳＰ	1
(2181-1515-01)	LENS LOCK PIN	レンズロックピン	1
(2186-1520-01)	COUPLER LEVER	カプラーレバー	1
(2163-1521-01)	BAYONET MOUNT	マウント	1
(2186-1521-01)	COUPLER LEVER SHAFT	カプラーレバー軸	1
(2186-1522-01)	COUPLER LINKAGE LEVER	カプラー連動レバー	1
(2186-1523-01)	COUPLER LEVER SPRING	カプラーレバー付勢ＳＰ	1
(2186-1524-03)	MOUNT SPACER	マウントスペーサ	1
(2186-1525-01)	COUPLER LEVER ADJ SCREW	カプラーレバー調整ねじ	1
(2186-1545-02)	LENS LOCK BUTTON	レンズロック釦	1
(2162-1547-01)	LENS LOCK SP	レンズロックＳＰ	1
(2186-1813-01)	MOUNT RAG PLATE 2	マウント用ラグ板２	1
(2186-2512-01)	APERTURE LINKAGE GEAR	絞り連結ギヤ	1
(2186-2530-02)	APERTURE RING	絞りリング	1
(2186-2532-02)	ROLLER -A	リングローラーＡ	2
(2186-2533-02)	ROLLER -B	リングローラーＢ	2
(2186-2534-01)	ROLLER -C	リングローラーＣ	1
(2186-2535-01)	ROLLER -C SHAFT	リングローラーＣ軸	1
(2181-5123-01)	SCREW AF CHARGE BS PLT	ＡＦ／チャージ台板ねじ	2
(9747-1745-01)	SCREW	ねじ	2
(9747-1750-01)	SCREW	ねじ	3
(9749-1730-01)	SCREW	ねじ	1
(9761-2055-04)	SCREW	ねじ	6

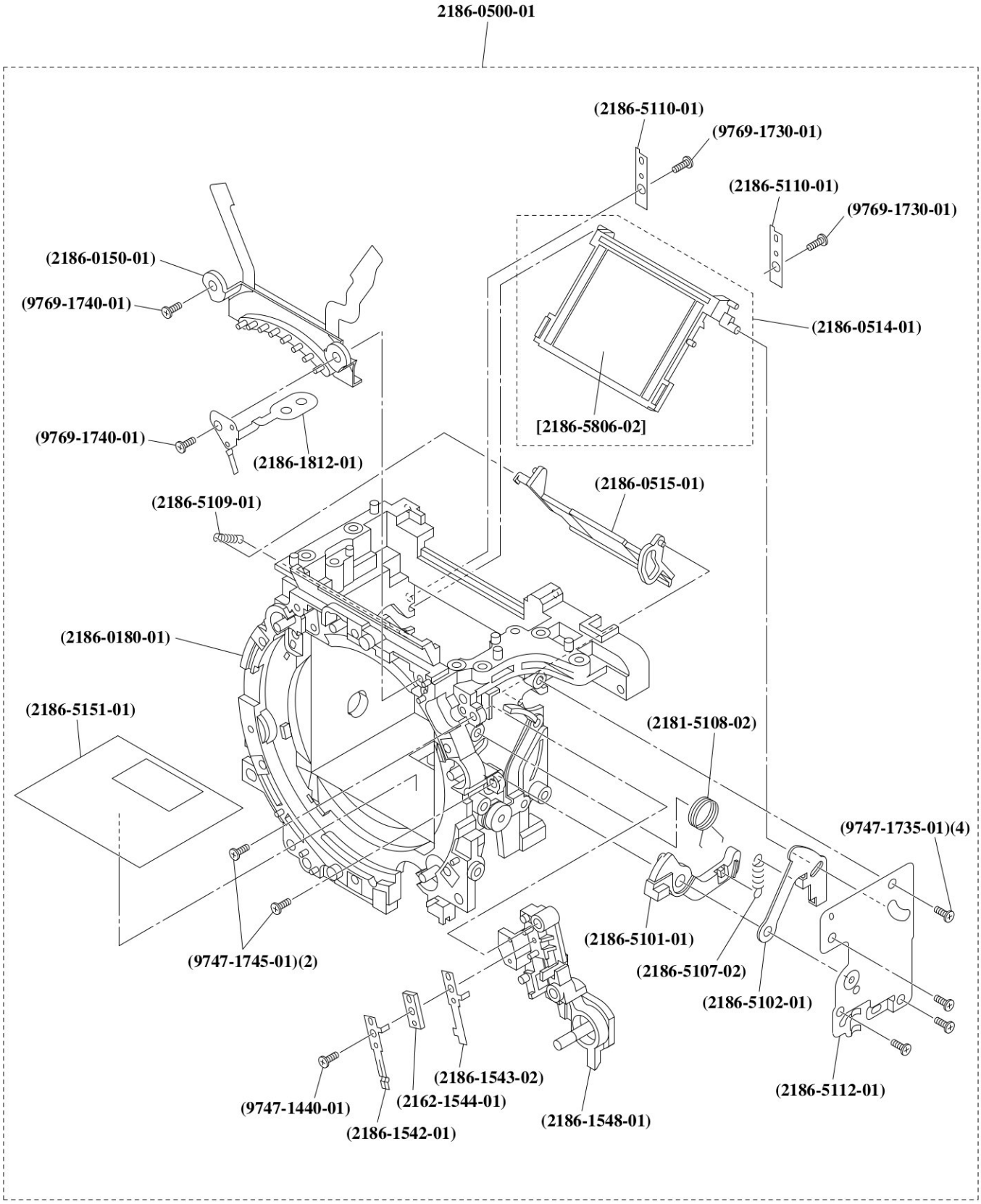
2186-0500-01
(2186-5110-01)
(9769-1730-01)
(2186-5110-01)
(9769-1730-01)
(2186-0150-01)
(9769-1740-01)
(2186-0514-01)
[2186-5806-02]
(9769-1740-01)
(2186-1812-01)
(2186-0515-01)
(2186-5109-01)
(2186-0180-01)
(2186-5151-01)
(2181-5108-02)
(9747-1735-01)(4)
(2186-5101-01)
(2186-5107-02)
(2186-5102-01)
(9747-1745-01)(2)
(2186-5112-01)
(2186-1543-02)
(9747-1440-01)
(2162-1544-01)
(2186-1548-01)
(2186-1542-01)

PART NO	PART NAME		QTY.
2186-0500-01	MIRROR BOX ASSY	ミラーボックスセット	1
(2186-0150-01)	BL CONTACT HOLDER ASSY	ＢＬ接片ホルダーセット	1
(2186-0180-01)	FRONT FRAME ASSY	前枠セット	1
(2186-0514-01)	MAIN MIRROR HOLDER UNIT	主ミラーホルダーセット	1
[2186-5806-02]	MAIN MIRROR	主ミラー	1
(2186-0515-01)	SUB MIRROR HOLDER ASSY	サブミラーホルダーセット	1
(2186-1542-01)	SLLK CONTACT A	ＳＬＬＫ接片Ａ	1
(2186-1543-02)	SLLK CONTACT B	ＳＬＬＫ接片Ｂ	1
(2162-1544-01)	SLLK CONTACT SPACER	ＳＬＬＫ接片スペーサー	1
(2186-1548-01)	LENS LOCK BUTTON HOLDING BASE PLATE	レンズロック釦保持台板	1
(2186-1812-01)	MOUNT RAG PLATE1	マウント用ラグ板１	1
(2186-5101-01)	MIRROR DRIVING LEVER	ミラー駆動レバー	1
(2186-5102-01)	MAIN MIRROR DRIVING LEVER	主ミラー駆動レバー	1
(2186-5107-02)	MIRROR OVER CHARGE SP	ミラーオーバーチャージＳＰ	1
(2181-5108-02)	MIRROR DRIVE SP	ミラー駆動ＳＰ	1
(2186-5109-01)	SUB MIRROR DRIVING SP	サブミラー駆動ＳＰ	1
(2186-5110-01)	M.MIRROR HOLDER PRESSING PLT	主ミラーホルダー押え板	2
(2186-5112-01)	MIRROR DRIVING BASE PLT	ミラー駆動台板	1
(2186-5151-01)	FLARE CUTTER SHEET	フレア防止シート	1
(9747-1440-01)	SCREW	ねじ	1
(9747-1735-01)	SCREW	ねじ	4
(9747-1745-01)	SCREW	ねじ	2
(9769-1730-01)	SCREW	ねじ	2
(9769-1740-01)	SCREW	ねじ	2

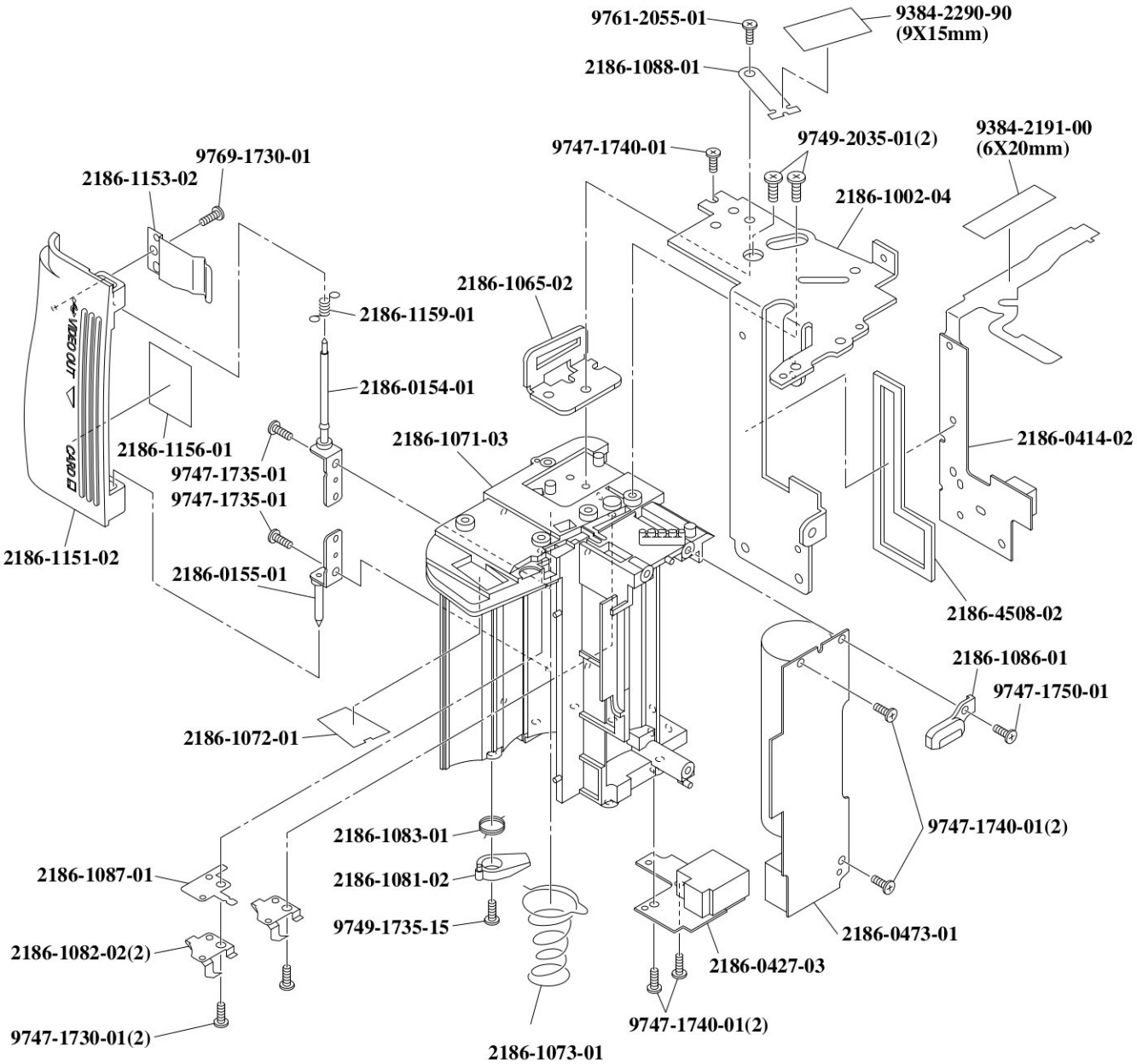
9761-2055-01
9384-2290-90
(9X15mm)
2186-1088-01
9747-1740-01
9749-2035-01(2)
9384-2191-00
(6X20mm)
9769-1730-01
2186-1153-02
2186-1002-04
2186-1065-02
2186-1159-01
2186-0154-01
2186-1071-03
2186-0414-02
2186-1156-01
9747-1735-01
9747-1735-01
2186-1151-02
2186-0155-01
2186-4508-02
2186-1086-01
9747-1750-01
2186-1072-01
9747-1740-01(2)
2186-1083-01
2186-1087-01
2186-1081-02
9749-1735-15
2186-0473-01
2186-1082-02(2)
2186-0427-03
9747-1740-01(2)
9747-1730-01(2)
2186-1073-01

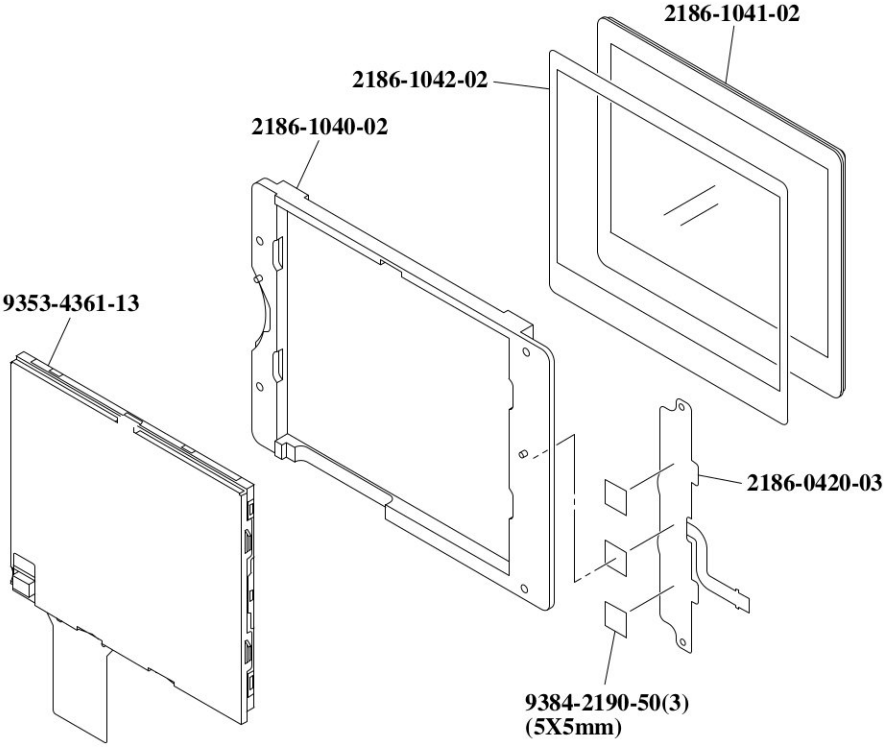
2186-1041-02
2186-1042-02
2186-1040-02
9353-4361-13
2186-0420-03
9384-2190-50(3)
(5X5mm)

PART NO	PART NAME		QTY.
2186-0154-01	CF CARD COVER HINGE SHAFT-A ASSY	ＣＦカードカバー軸Ａセット	1
2186-0155-01	CF CARD COVER HINGE SHAFT-B ASSY	ＣＦカードカバー軸Ｂセット	1
2186-0414-02	GYRO FPC ASSY	ジャイロフレキセット	1
2186-0420-03	SW FPC-2 ASSY	ＳＷフレキ２セット	1
2186-0427-03	DC JACK PCB ASSY	ＤＣジャック基板セット	1
2186-0473-01	FLASH PCB ASSY	フラッシュ基板セット	1
2186-1002-04	SUS PLATE G	サブシャーシＧ	1
2186-1040-02	LCD HOLDER	ＬＣＤホルダー	1
2186-1041-02	LCD WINDOW	ＬＣＤ窓	1
2186-1042-02	LCD WINDOW ATTACHMENT SHEET	ＬＣＤ窓貼付けシート	1
2186-1065-02	EYELET G	吊環Ｇ	1
2186-1071-03	BATTERY CHAMBER	電池室	1
2186-1072-01	BATTERY CHAMBER SHEET	電池室シート	1
2186-1073-01	BATTERY FORCING SP	電池付勢ＳＰ	1
2186-1081-02	BATTERY LOCK PLATE	電池ロック爪	1
2186-1082-02	BATTERY CONTACT	電池接片	2
2186-1083-01	BATTERY LOCK PLATE FORCING SP	電池ロック爪付勢ＳＰ	1
2186-1086-01	FLASH PCB GAP HOLDER	フラッシュ基板絶縁ホルダー	1
2186-1087-01	LUG PLATE 1	ラグ板１	1
2186-1088-01	LUG PLATE 2	ラグ板２	1
2186-1151-02	CF CARD COVER	ＣＦカード蓋	1
2186-1153-02	CF CARD COVER CLICK PLATE	ＣＦカード蓋クリック板	1
2186-1156-01	CF CARD DISPLAY SHEET	ＣＦカード表示シート	1
2186-1159-01	CF CARD COVER SP	ＣＦカード蓋ＳＰ	1
2186-4508-02	GYRO FPC TAPE	ジャイロフレキテープ	1
9353-4361-13	LCD 101	ＬＣＤ１０１	1
9384-2190-50	DOUBLE-FACED TAPE (PER ROLL)	両面テープ	3
9384-2191-00	DOUBLE-FACED TAPE (PER ROLL)	両面テープ	1
9384-2290-90	POLYESTER TAPE (PER ROLL/60M) YELLOW	ポリエステルテープ	1
9747-1730-01	SCREW	ねじ	2
9747-1735-01	SCREW	ねじ	2
9747-1740-01	SCREW	ねじ	5
9747-1750-01	SCREW	ねじ	1
9749-1735-15	SCREW	ねじ	1
9749-2035-01	SCREW	ねじ	2
9761-2055-01	SCREW	ねじ	1
9769-1730-01	SCREW	ねじ	1

09(2186)

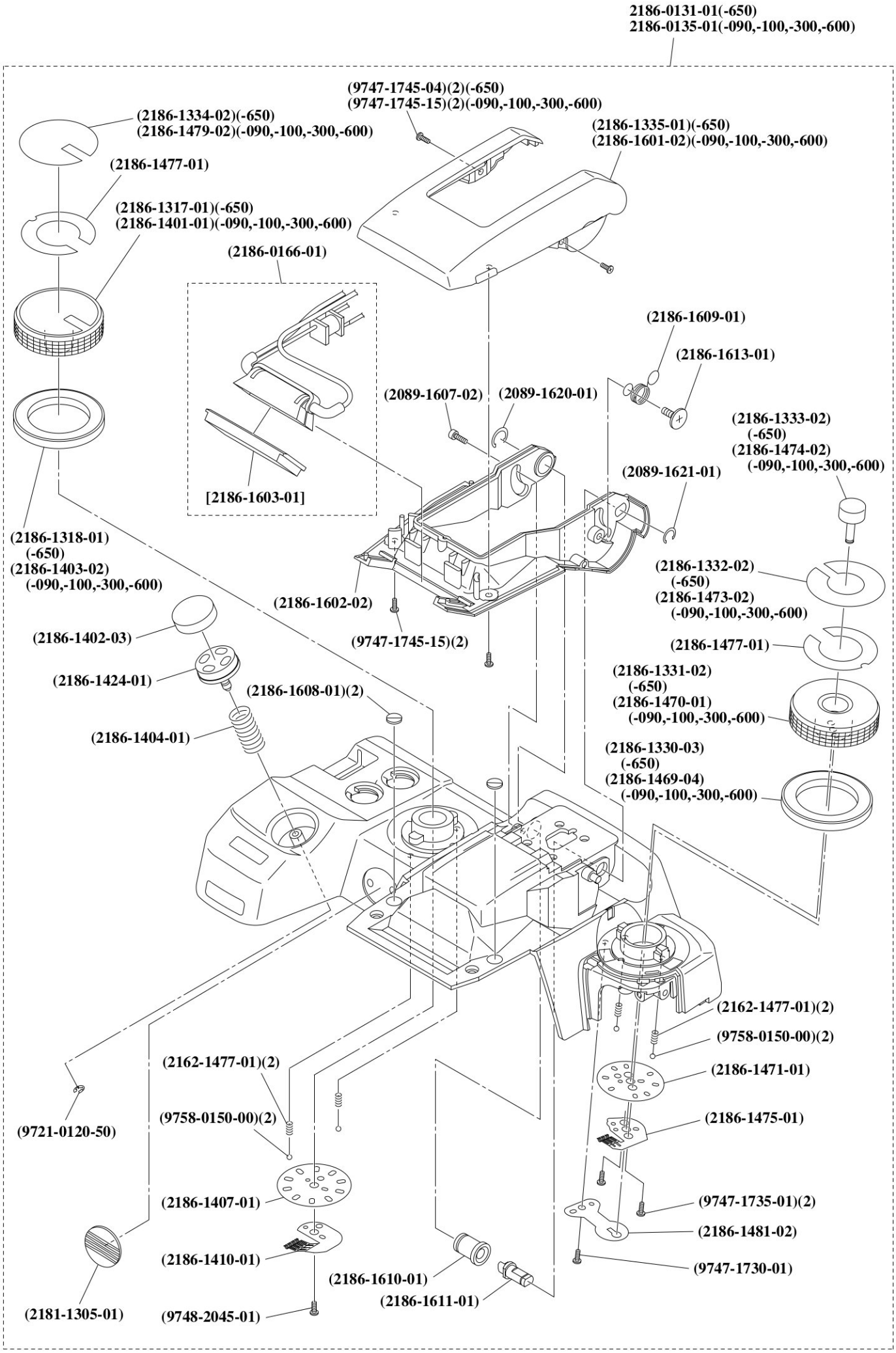
2186-0131-01(-650)
2186-0135-01(-090,-100,-300,-600)
(9747-1745-04)(2)(-650)
(9747-1745-15)(2)(-090,-100,-300,-600)
(2186-1334-02)(-650)
(2186-1479-02)(-090,-100,-300,-600)
(2186-1335-01)(-650)
(2186-1601-02)(-090,-100,-300,-600)
(2186-1477-01)
(2186-1317-01)(-650)
(2186-1401-01)(-090,-100,-300,-600)
(2186-0166-01)
(2186-1609-01)
(2186-1613-01)
(2089-1607-02)
(2089-1620-01)
(2186-1333-02)
(-650)
(2186-1474-02)
(-090,-100,-300,-600)
(2089-1621-01)
[2186-1603-01]
(2186-1318-01)
(-650)
(2186-1403-02)
(-090,-100,-300,-600)
(2186-1332-02)
(-650)
(2186-1473-02)
(-090,-100,-300,-600)
(2186-1602-02)
(2186-1402-03)
(9747-1745-15)(2)
(2186-1477-01)
(2186-1424-01)
(2186-1331-02)
(-650)
(2186-1470-01)
(-090,-100,-300,-600)
(2186-1608-01)(2)
(2186-1404-01)
(2186-1330-03)
(-650)
(2186-1469-04)
(-090,-100,-300,-600)
(2162-1477-01)(2)
(9758-0150-00)(2)
(2186-1471-01)
(2162-1477-01)(2)
(9758-0150-00)(2)
(2186-1475-01)
(9721-0120-50)
(2186-1407-01)
(9747-1735-01)(2)
(2186-1481-02)
(2186-1410-01)
(9747-1730-01)
(2186-1610-01)
(2186-1611-01)
(2181-1305-01)
(9748-2045-01)

PART NO	PART NAME		QTY.
2186-0131-01	TOP COVER ASSY (-650)	上カバーセット	1
2186-0135-01	TOP COVER ASSY (-090, -100, -300, -600)	上カバーセット	
(2186-0166-01)	REFLECTOR ASSY	発光部セット	1
[2186-1603-01]	FLASH PANEL	発光パネル	1
(2181-1305-01)	VI EMBLEM	ＶＩエンブレム	1
(2186-1317-01)	MODE DIAL (-650)	モードダイヤル	1
(2186-1401-01)	MODE DIAL (-090, -100, -300, -600)	モードダイヤル	
(2186-1318-01)	MODE DIAL DECORATION RING (-650)	モードダイヤル化粧リング	1
(2186-1403-02)	MODE DIAL DECORATION RING (-090, -100, -300, -600)	モードダイヤル化粧リング	
(2186-1330-03)	WB DIAL DECORATION RING (-650)	ＷＢダイヤル化粧リング	1
(2186-1469-04)	WB DIAL DECORATION RING (-090, -100, -300, -600)	ＷＢダイヤル化粧リング	
(2186-1331-02)	WB DIAL (-650)	ＷＢダイヤル	1
(2186-1470-01)	WB DIAL (-090, -100, -300, -600)	ＷＢダイヤル	
(2186-1332-02)	WB DIAL NAME PLATE (-650)	ＷＢダイヤル文字板	1
(2186-1473-02)	WB DIAL NAME PLATE (-090, -100, -300, -600)	ＷＢダイヤル文字板	
(2186-1333-02)	WB BUTTON (-650)	ＷＢ釦	1
(2186-1474-02)	WB BUTTON (-090, -100, -300, -600)	ＷＢ釦	
(2186-1334-02)	MODE DIAL NAME PLATE (-650)	モードダイヤル文字板	1
(2186-1479-02)	MODE DIAL NAME PLATE (-090, -100, -300, -600)	モードダイヤル文字板	
(2186-1335-01)	FLASH CASE (UPPER) (-650)	発光部ケース（上）	1
(2186-1601-02)	FLASH CASE (UPPER) (-090, -100, -300, -600)	発光部ケース（上）	
(2186-1402-03)	RELEASE BUTTON CAP	レリーズ釦キャップ	1
(2186-1404-01)	RELEASE BUTTON SP	レリーズ釦ＳＰ	1
(2186-1407-01)	MODE DIAL CLICK PLATE	モードダイヤルクリック板	1
(2186-1410-01)	MODE DIAL CONTACT	モードダイヤル接片	1
(2186-1424-01)	RELEASE BUTTON	レリーズ釦	1
(2186-1471-01)	WB DIAL CLICK PLATE	ＷＢダイヤルクリック板	1
(2186-1475-01)	WB DIAL DETECT CONTACT	ＷＢダイヤル接片	1
(2162-1477-01)	DIAL CLICK SP	露出ダイヤルクリックＳＰ	4
(2186-1477-01)	WB / MODE NAME PLATE TAPE	ＷＢ文字板テープ	2
(2186-1481-02)	WB BUTTON SP	ＷＢ釦ＳＰ	1
(2186-1602-02)	FLASH CASE (BOTTOM)	発光部ケース（下）	1
(2089-1607-02)	SCREW	ねじ	1
(2186-1608-01)	FLASH CUSHION RUBBER	フラッシュクッション	2
(2186-1609-01)	F SNAP ACTION SP	フラッシュスナップアクションＳＰ	1
(2186-1610-01)	ROTATION AXIS (L)	回転軸Ｌ	1
(2186-1611-01)	ROTATION AXIS (R)	回転軸Ｒ	1
(2186-1613-01)	SNAP SUPPORTING SCREW	ねじ	1
(2089-1620-01)	C-RING	Ｃリング	1
(2089-1621-01)	C-RING	Ｃリング	1
(9721-0120-50)	E-RING	Ｅリング	1
(9747-1730-01)	SCREW	ねじ	1
(9747-1735-01)	SCREW	ねじ	2
(9747-1745-04)	SCREW (-650)	ねじ	2
(9747-1745-15)	SCREW (-650)	ねじ	2
(9747-1745-15)	SCREW (-090, -100, -300, -600)	ねじ	4
(9748-2045-01)	SCREW	ねじ	1
(9758-0150-00)	STEEL BALL	スチールボール	4

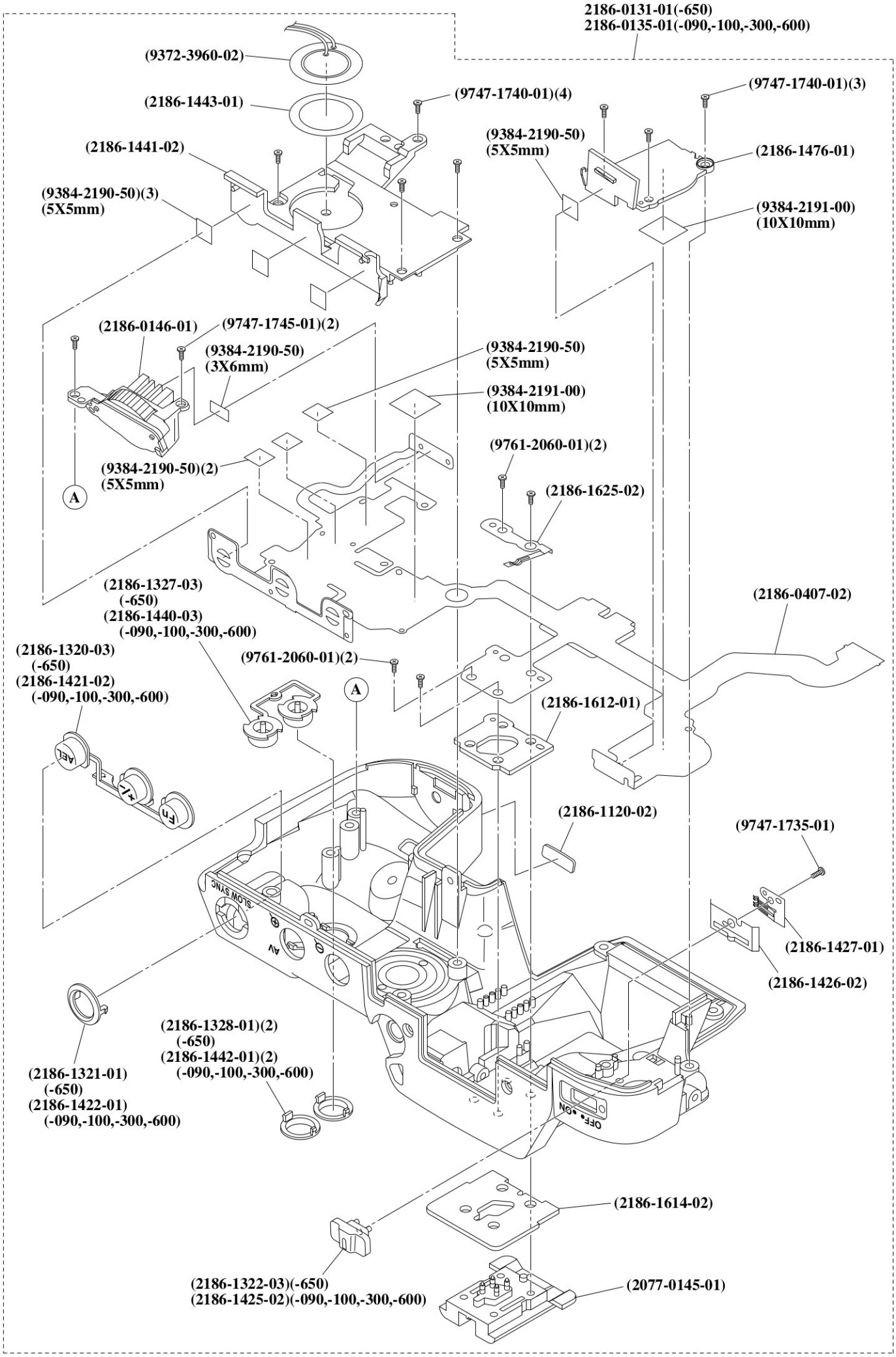
2186-0131-01(-650)
2186-0135-01(-090,-100,-300,-600)
(9372-3960-02)
(2186-1443-01)
(9747-1740-01)(4)
(9747-1740-01)(3)
(2186-1441-02)
(9384-2190-50)
(5X5mm)
(2186-1476-01)
(9384-2190-50)(3)
(5X5mm)
(9384-2191-00)
(10X10mm)
(2186-0146-01)
(9747-1745-01)(2)
(9384-2190-50)
(3X6mm)
(9384-2190-50)
(5X5mm)
(9384-2191-00)
(10X10mm)
(9761-2060-01)(2)
(9384-2190-50)(2)
(5X5mm)
A
(2186-1625-02)
(2186-1327-03)
(-650)
(2186-1440-03)
(-090,-100,-300,-600)
(2186-0407-02)
(2186-1320-03)
(-650)
(2186-1421-02)
(-090,-100,-300,-600)
(9761-2060-01)(2)
A
(2186-1612-01)
AEL
+1/-
FL
(2186-1120-02)
(9747-1735-01)
SLOW SYNC
AV
(2186-1427-01)
(2186-1426-02)
(2186-1328-01)(2)
(-650)
(2186-1442-01)(2)
(-090,-100,-300,-600)
(2186-1321-01)
(-650)
(2186-1422-01)
(-090,-100,-300,-600)
OFF • ON
(2186-1614-02)
(2186-1322-03)(-650)
(2186-1425-02)(-090,-100,-300,-600)
(2077-0145-01)

PART NO	PART NAME		QTY.
2186-0131-01	TOP COVER ASSY (-650)	上カバーセット	1
2186-0135-01	TOP COVER ASSY (-090, -100, -300, -600)	上カバーセット	
(2077-0145-01)	FLASH ACC SHOE SET	アクセサリーシューセット	1
(2186-0146-01)	FRONT DIAL HOLDER ASSY	前ダイヤルホルダーセット	1
(2186-0407-02)	TOP COVER FPC ASSY	上カバーフレキセット	1
(2186-1120-02)	SELF WINDOW	セルフ窓	1
(2186-1320-03)	3 COMBINED BUTTON (-650)	３連釦	1
(2186-1421-02)	3 COMBINED BUTTON (-090, -100, -300, -600)	３連釦	
(2186-1321-01)	AEL BUTTON RING (-650)	ＡＥＬ釦リング	1
(2186-1422-01)	AEL BUTTON RING (-090, -100, -300, -600)	ＡＥＬ釦リング	
(2186-1322-03)	MAIN SW CHANGEOVER LEVER (-650)	メインＳＷレバー	1
(2186-1425-02)	MAIN SW CHANGEOVER LEVER (-090, -100, -300, -600)	メインＳＷレバー	
(2186-1327-03)	2 COMBINED BUTTON (-650)	２連釦	1
(2186-1440-03)	2 COMBINED BUTTON (-090, -100, -300, -600)	２連釦	
(2186-1328-01)	MODE BUTTON RING (-650)	モード釦リング	2
(2186-1442-01)	MODE BUTTON RING (-090, -100, -300, -600)	モード釦リング	
(2186-1426-02)	MAIN SW CHANGEOVER LEVER CLICK PLATE	メインＳＷレバークリック板	1
(2186-1427-01)	MAIN SW CHANGEOVER LEVER CONTACT	メインＳＷ接片	1
(2186-1441-02)	MODE DIAL PLATE	モードダイヤル台板	1
(2186-1443-01)	BUZZER ATTACHMENT TAPE	ブザー貼付けテープ	1
(2186-1476-01)	WB DIAL BASE PLATE	ＷＢダイヤル台板	1
(2186-1612-01)	HOT SHOE MOUNTING PLATE	シュー取付板	1
(2186-1614-02)	HOT SHOE PLATE	シュー敷板	1
(2186-1625-02)	PU DETECT CONTACT	ＰＵ検知接片	1
(9372-3960-02)	BUZZER	ブザー	1
(9384-2190-50)	DOUBLE-FACED TAPE (PER ROLL)	両面テープ	8
(9384-2191-00)	DOUBLE-FACED TAPE (PER ROLL)	両面テープ	2
(9747-1735-01)	SCREW	ねじ	1
(9747-1740-01)	SCREW	ねじ	7
(9747-1745-01)	SCREW	ねじ	2
(9761-2060-01)	SCREW	ねじ	4

11(2186)

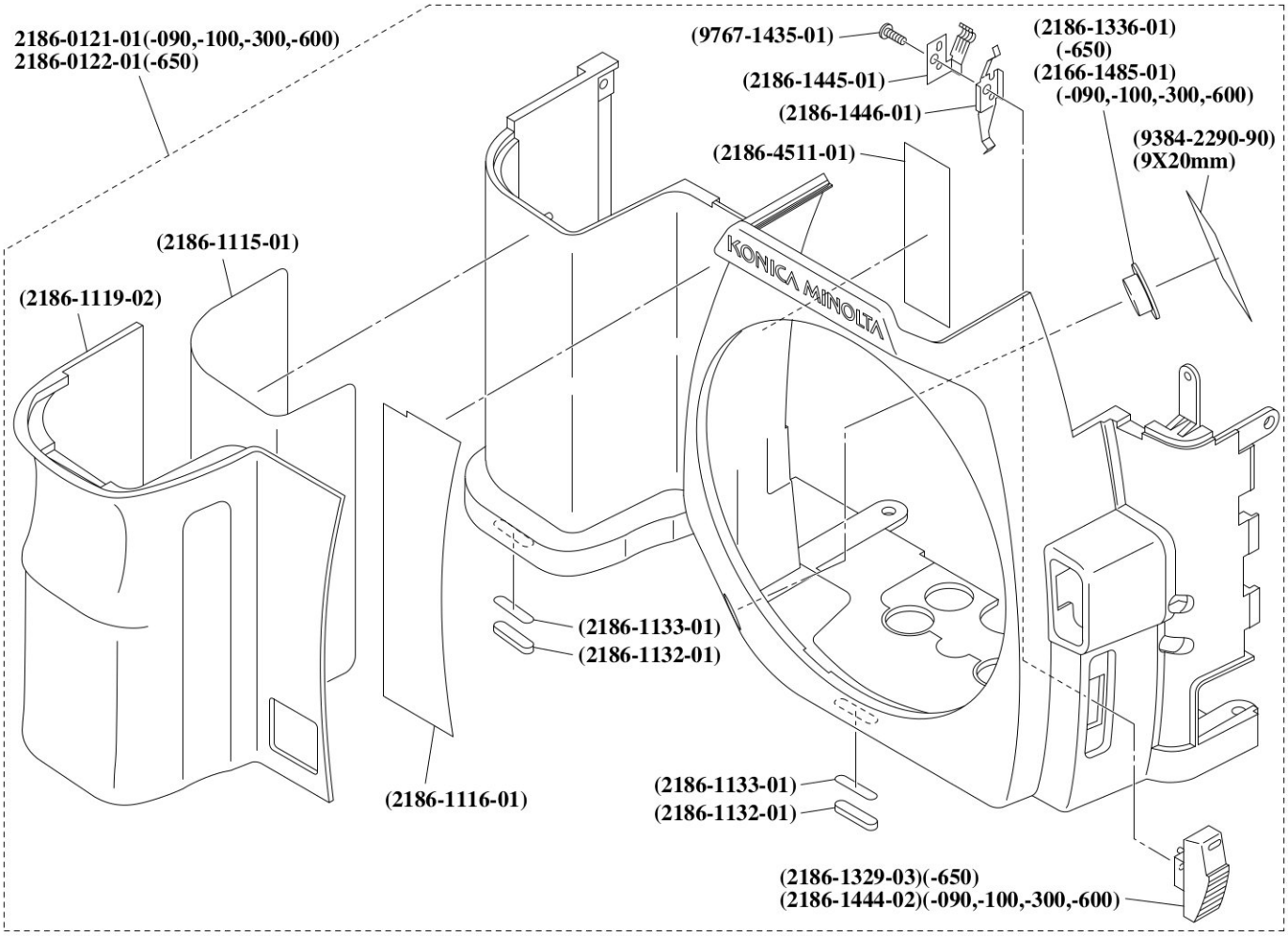
2186-0121-01(-090,-100,-300,-600)
2186-0122-01(-650)
(9767-1435-01)
(2186-1336-01)
(-650)
(2186-1445-01)
(2166-1485-01)
(-090,-100,-300,-600)
(2186-1446-01)
(9384-2290-90)
(9X20mm)
(2186-4511-01)
(2186-1115-01)
(2186-1119-02)
KONICA MINOLTA
(2186-1133-01)
(2186-1132-01)
(2186-1116-01)
(2186-1133-01)
(2186-1132-01)
(2186-1329-03)(-650)
(2186-1444-02)(-090,-100,-300,-600)

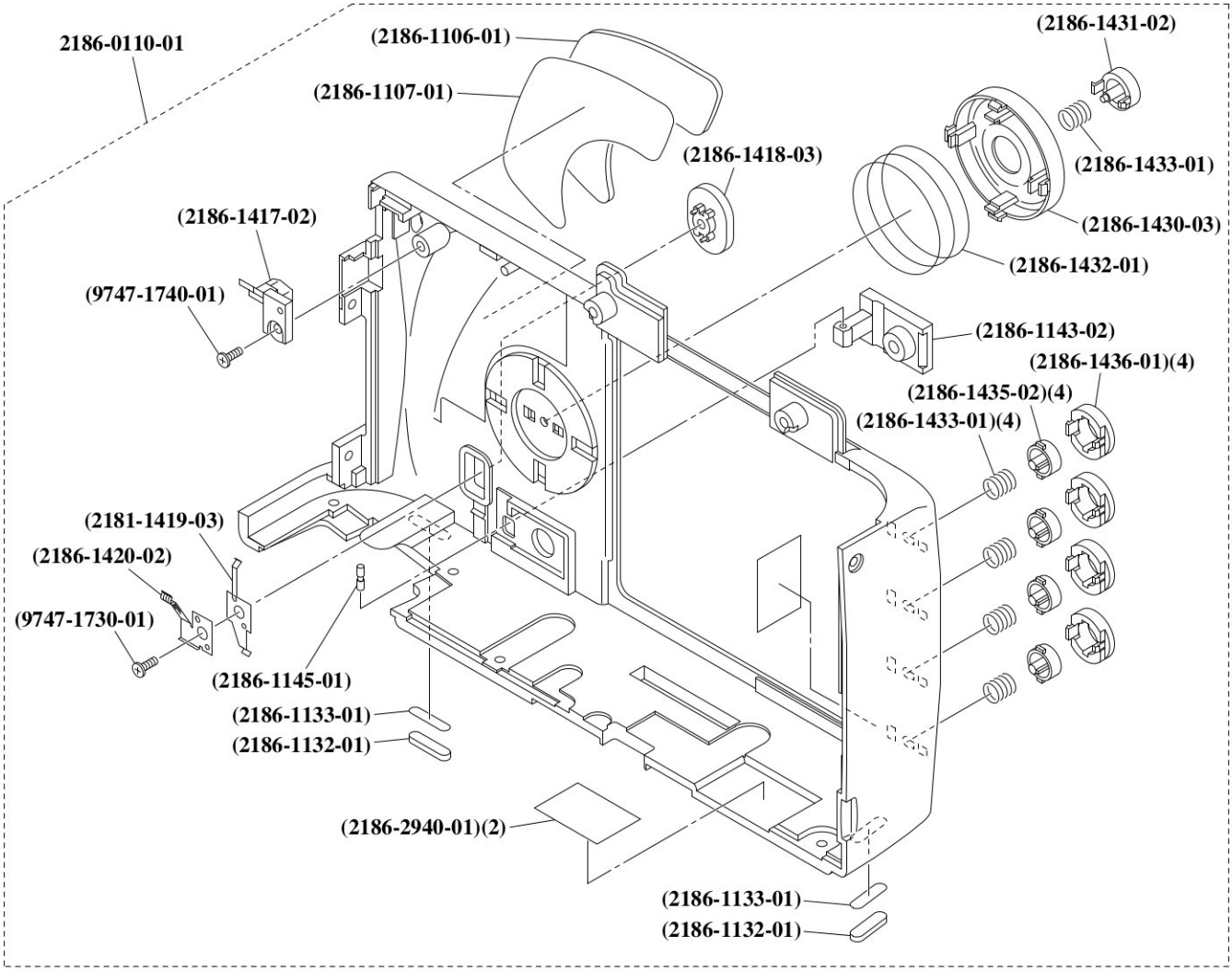
2186-0110-01
(2186-1106-01)
(2186-1431-02)
(2186-1107-01)
(2186-1418-03)
(2186-1433-01)
(2186-1417-02)
(2186-1430-03)
(2186-1432-01)
(9747-1740-01)
(2186-1143-02)
(2186-1436-01)(4)
(2186-1435-02)(4)
(2186-1433-01)(4)
(2181-1419-03)
(2186-1420-02)
(9747-1730-01)
(2186-1145-01)
(2186-1133-01)
(2186-1132-01)
(2186-2940-01)(2)
(2186-1133-01)
(2186-1132-01)

PART NO	PART NAME		QTY.
2186-0110-01	BACK COVER ASSY	後カバーセット	1
(2186-1106-01)	BACK COVER RUBBER	後カバーゴム	1
(2186-1107-01)	BACK COVER ATTACHMENT TAPE	後カバーゴム貼付けテープ	1
(2186-1132-01)	FRONT COVER BOTTOM RUBBER	底面ゴム	2
(2186-1133-01)	DOUBLE SIDE TAPE	底面ゴムテープ	2
(2186-1143-02)	DC JACK COVER	ＤＣジャックカバー	1
(2186-1145-01)	DC COVER PIN	ＤＣカバーピン	1
(2186-1417-02)	ACCESS LAMP WINDOW	アクセスランプ窓	1
(2186-1418-03)	ANTI SHAKE SW CHANGEOVER LEVER	手振れＳＷレバー	1
(2181-1419-03)	TEBURE CLICK PLATE	手振れクリック板	1
(2186-1420-02)	ANTI SHAKE SW CONTACT	手振れＳＷ接片	1
(2186-1430-03)	CROSS BUTTON	十字釦	1
(2186-1431-02)	DECISION BUTTON	決定釦	1
(2186-1432-01)	CROSS BUTTON SP	十字釦ＳＰ	1
(2186-1433-01)	DECISION BUTTON SP	決定釦ＳＰ	5
(2186-1435-02)	4 COMBINED BUTTON	４連釦	4
(2186-1436-01)	4 COMBINED BUTTON DECORATION RING	４連釦飾りリング	4
(2186-2940-01)	TAPE	テープ	2
(9747-1730-01)	SCREW	ねじ	1
(9747-1740-01)	SCREW	ねじ	1
2186-0121-01	FRONT COVER ASSY (-090, -100, -300, -600)	前カバーセット	1
2186-0122-01	FRONT COVER ASSY (-650)	前カバーセット	
(2186-1115-01)	RUBBER DOUBLE SIDE TAPE A	グリップゴム両面テープＡ	1
(2186-1116-01)	RUBBER DOUBLE SIDE TAPE B	グリップゴム両面テープＢ	1
(2186-1119-02)	GRIP COVER	グリップゴム	1
(2186-1132-01)	FRONT COVER BOTTOM RUBBER	底面ゴム	2
(2186-1133-01)	DOUBLE SIDE TAPE	底面ゴムテープ	2
(2186-1329-03)	AF/M CHANGEOVER LEVER (-650)	ＡＦ／Ｍ切替えレバー	1
(2186-1444-02)	AF/M CHANGEOVER LEVER (-090, -100, -300, -600)	ＡＦ／Ｍ切替えレバー	
(2186-1336-01)	PREVIEW BUTTON (-650)	プレビュー釦	1
(2166-1485-01)	PREVIEW BUTTON (-090, -100, -300, -600)	プレビュー釦	
(2186-1445-01)	AF/M CHANGEOVER CONTACT	ＡＦ／Ｍ切替え接片	1
(2186-1446-01)	MAIN SW CLICK PLATE	ＡＦ／Ｍクリック板	1
(2186-4511-01)	INSULATING SHEET	絶縁シート	1
(9384-2290-90)	POLYESTER TAPE (PER ROLL/60M) YELLOW	ポリエステルテープ	1
(9767-1435-01)	SCREW	ねじ	1

■WIRING DIAGRAM 1 (2186)

⚠LEAD WIRES LIST

2186-4401-01 (W 151)	9391-0807- ▱▱(W 5, 6, 7, 8, 9, 10, 11, 12, 13, 14)
2186-4402-01 (W 152)	9391-1207- ▱▱(W 1, 2, 3, 4, 15, 16)
2186-4403-01 (W 153)	
2186-4404-01 (W 154)	

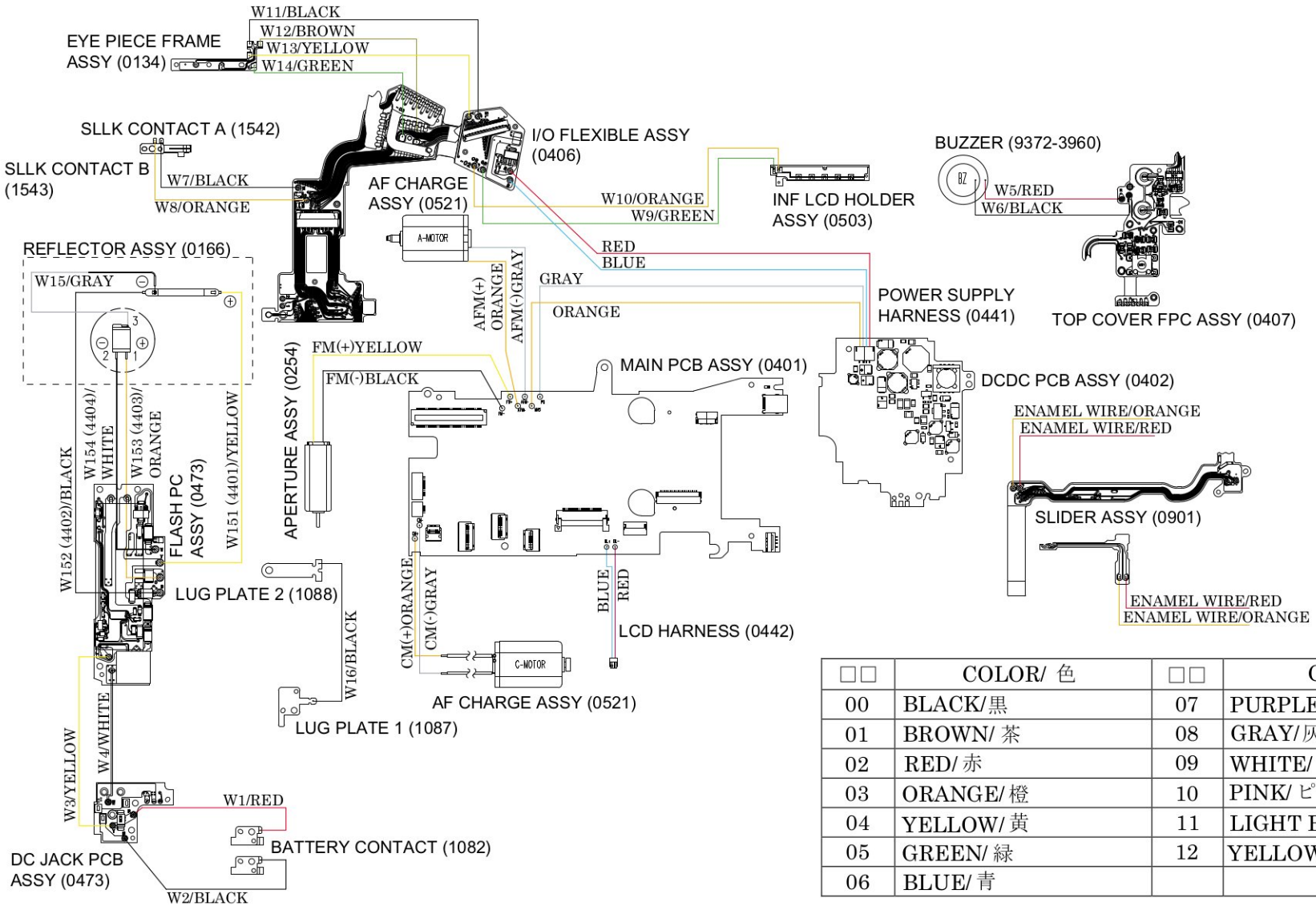

□□	COLOR/ 色	□□	COLOR/ 色
00	BLACK/黒	07	PURPLE/ 紫
01	BROWN/ 茶	08	GRAY/灰
02	RED/ 赤	09	WHITE/ 白
03	ORANGE/ 橙	10	PINK/ ピンク
04	YELLOW/ 黄	11	LIGHT BLUE/ 水色
05	GREEN/ 緑	12	YELLOWISH GREEN/黄緑
06	BLUE/ 青		

REPAIR GUIDE

This repair guide section contains the disassembly and adjustment procedures.
For the assembly procedure, follow the reverse procedure.

SYMBOLS

:Cautions and keypoints

G : Grease

B : Adhesive

T : Tool

CONTENTS Page

CONTENTS Page

Precautions

Chemicals

Handle chemicals of high volatility with care, use of which will affect to your health and environment.

1. Store them sealed in a specific place to prevent exposure to high temperature or direct sunlight.
2. Avoid dividing them into small containers and prevent vaporization.
3. Keep containers sealed when not in use.
4. Avoid using them as much as possible. When required, remove only required amount from the container to make full use.

Plastic parts

1. When cleaning plastic parts, use cleaning paper or cloth. Never use thinner, ketone, ether.
2. When installing plastic parts, insert the specific screws vertically to the parts. (Be careful not to tighten too much.

PCBs

Since PCBs use MOS IC, you must reduce static electricity. When repairing a PCB itself, or when wiring, please perform your work as illustrated below.
If grounding is impossible, connect a cable to a steel desk or shelf.

Unleaded solder

This model uses lead-free solder.
The cautions on use:

1. A soldering iron tip temperature of 280 - 350 is sufficient, but when it cannot melt solder, use a higher temperature for a short period of time.
2. Be sure to control soldering iron tips used for lead-free solder and those for leaded solder so they are managedseparately.
   This is because mixing lead-free solder and leaded solder will cause detachment phenomenon.

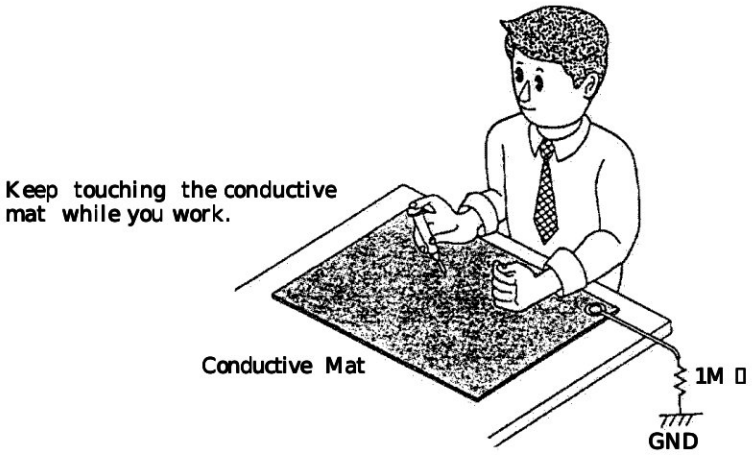

Discharge

Before disassembly, be sure to discharge the main condenser in the following manner.

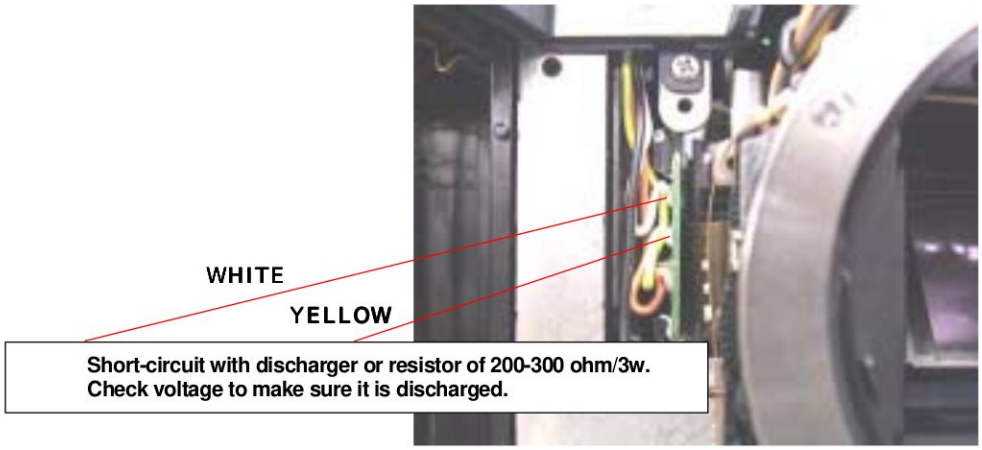

To activate without exterior parts

Short-circuit the pattern -a of I/O FLEXIBLE ASSY with solder.

When using replacement I/O FLEXIBLE ASSY, no need to short these patterns because it has pattern-b.

*Before installing BACK COVER ASSY, be sure to unsolder the pattern-a or to cut the pattern-b.

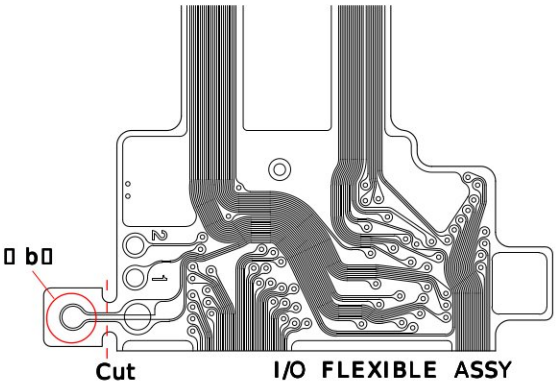

1. Disassembly of the exterior parts

Disassemble it in order of step 1 to 8.

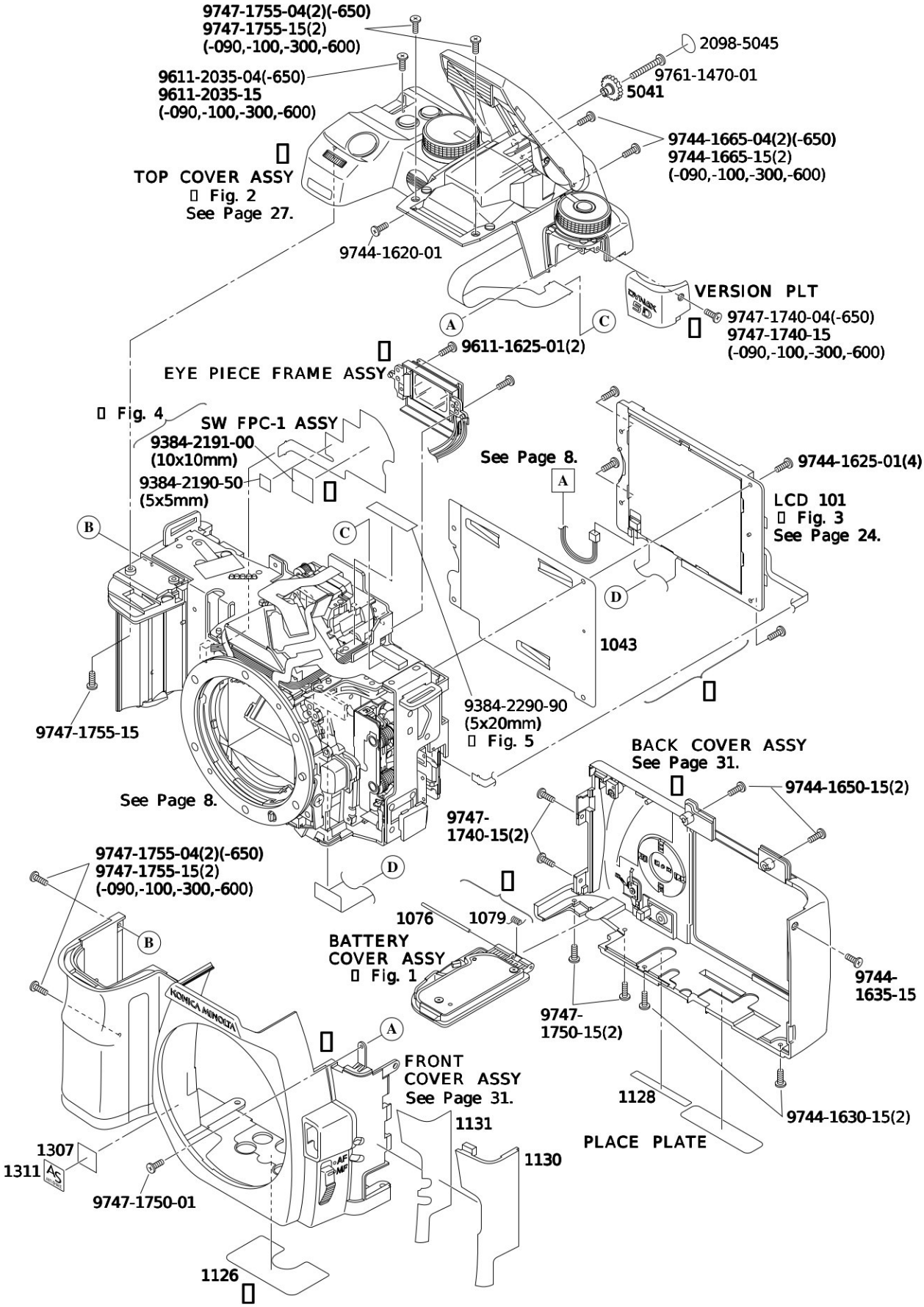

REPAIR GUIDE

▯ Fig. 1

Removal the BATTERY COVER ASSY

▯ Fig. 2

Removal the TOP COVER ASSY

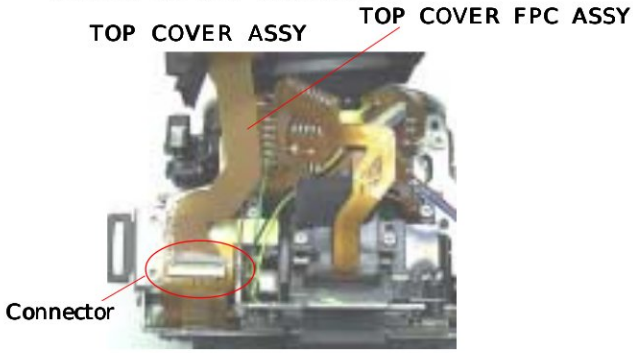

▯ Fig. 3

Removal the LCD 101

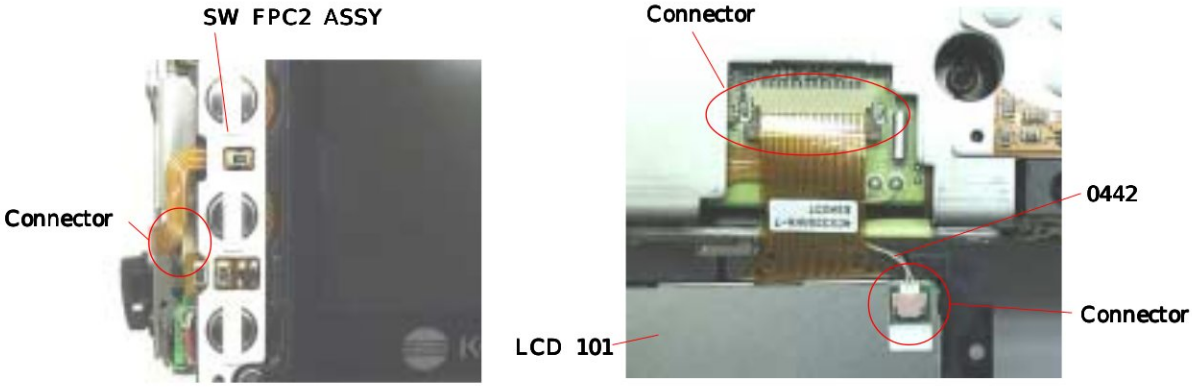

▯ Fig. 4

Stick SW FPC 1 ASSY of 1001

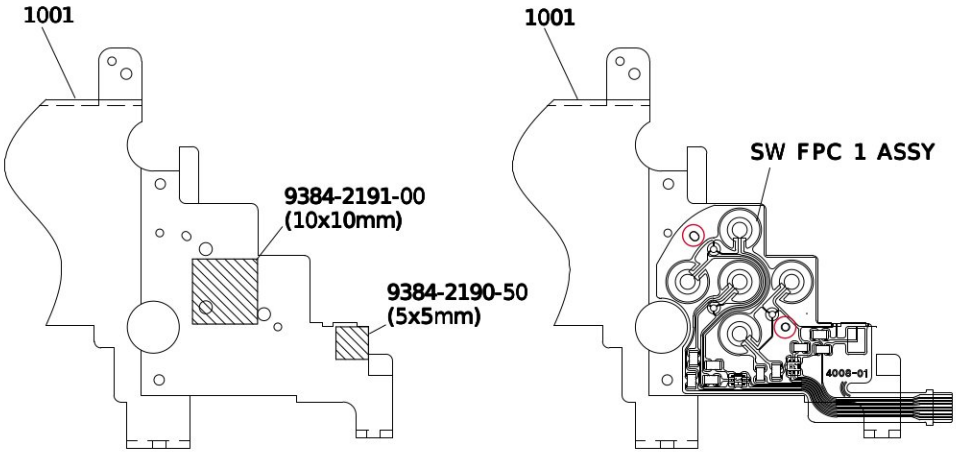

▯ Fig. 5

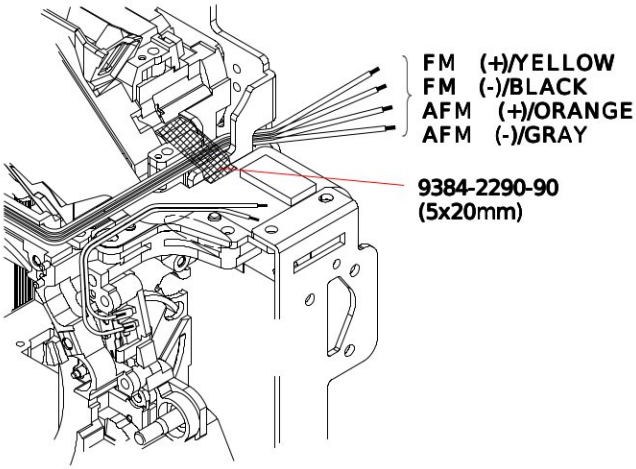

Wires arrangement

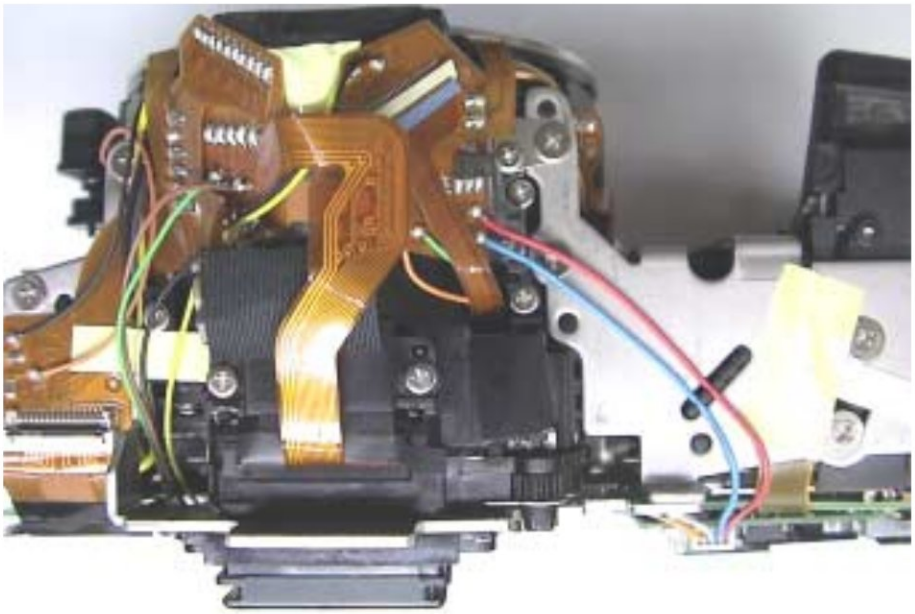

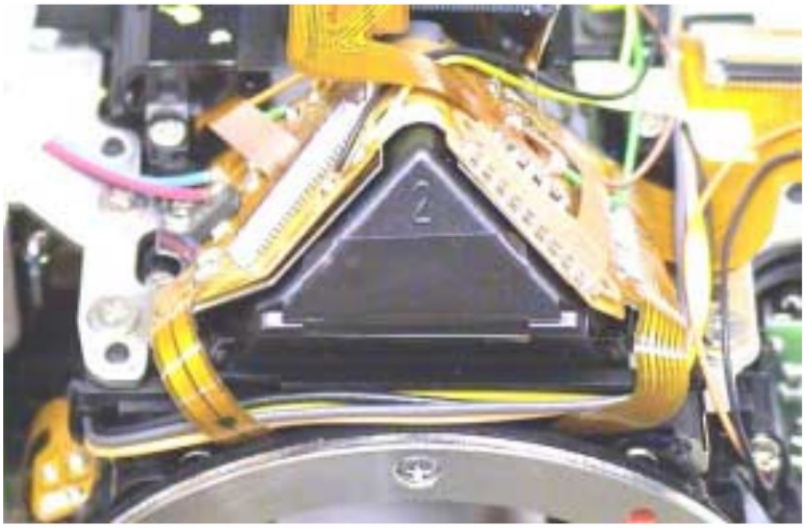

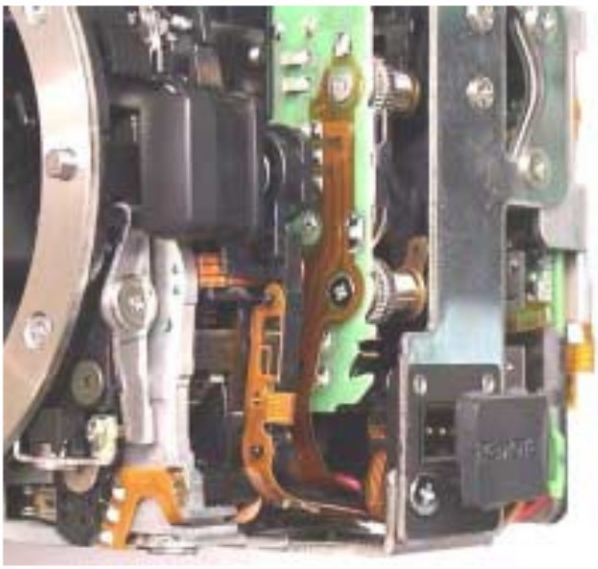


BAT
GND

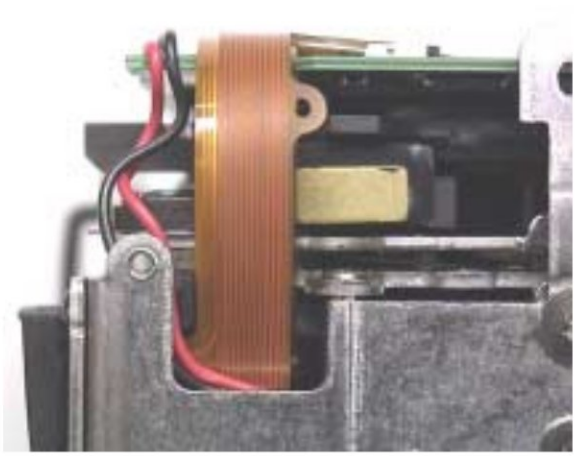


OFF
ON
AV
AEL
SLOW SYNC

2. Disassembly of the I/O FPC ASSY, MAIN PCB ASSY

Disassemble it in order of step 1 to 5.

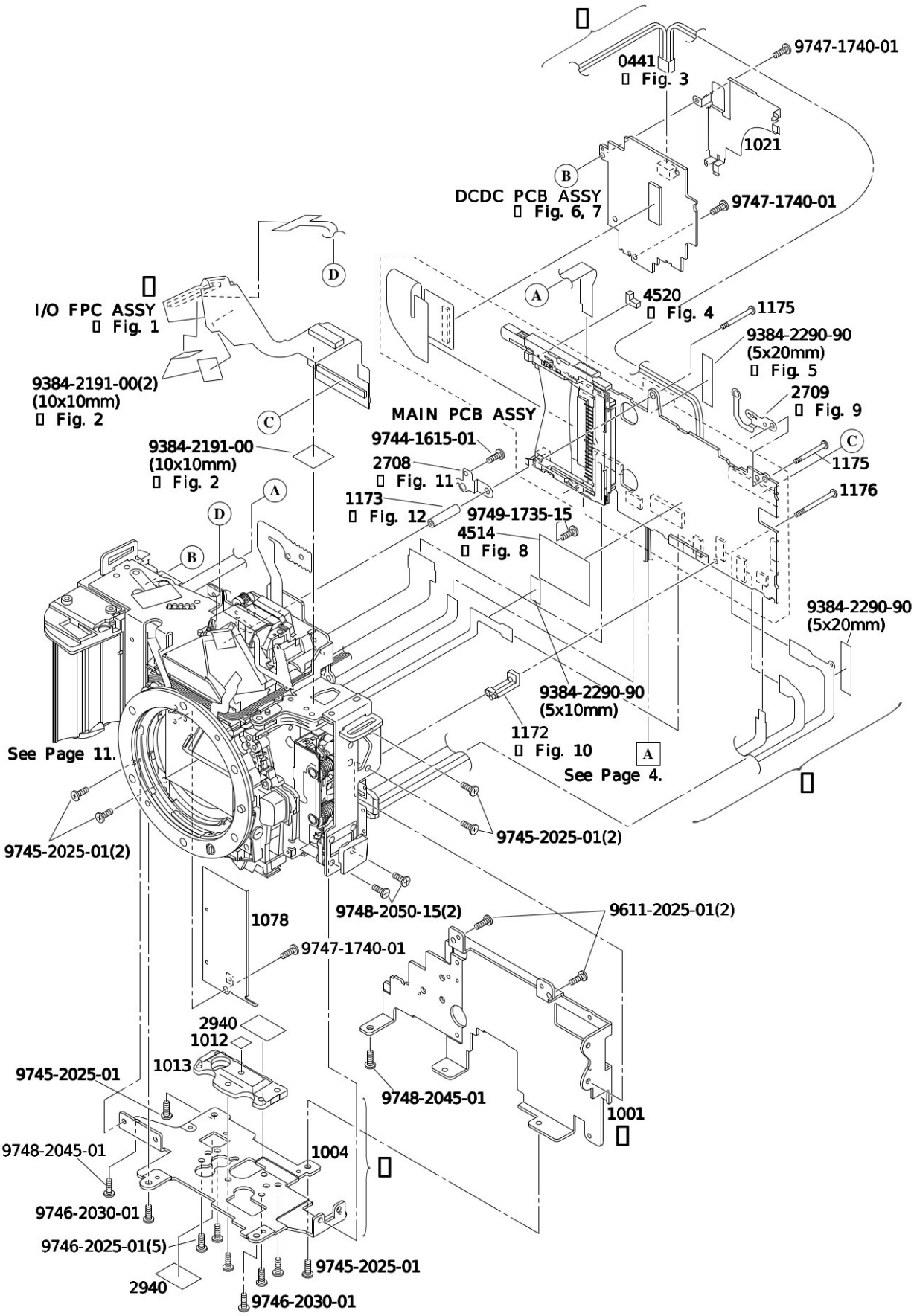

REPAIR GUIDE

Fig. 1

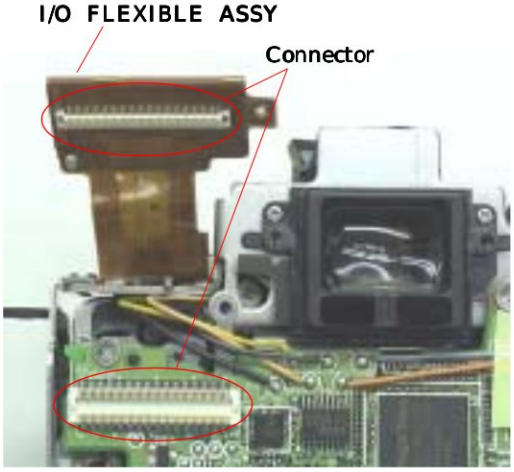

Fig. 2

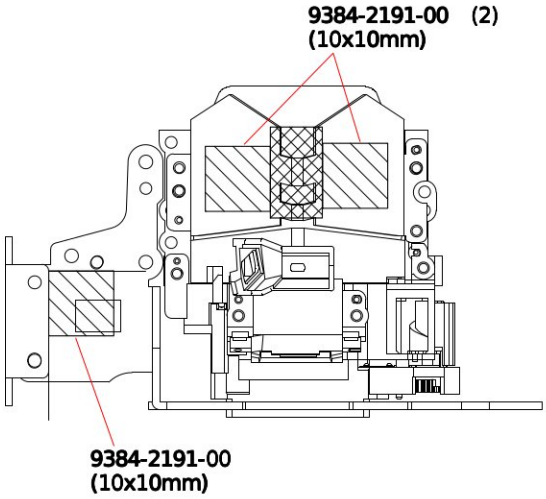

Fig. 3

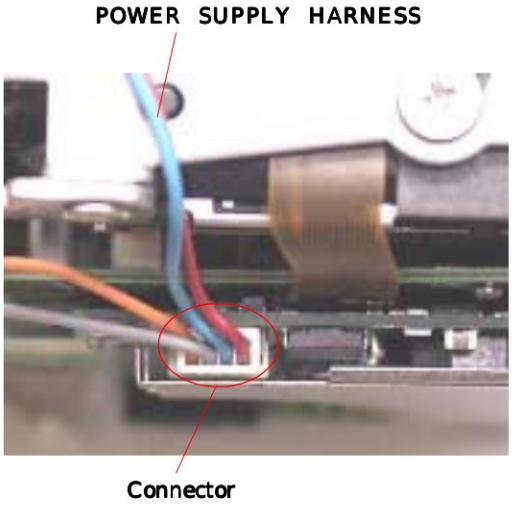

Fig. 4

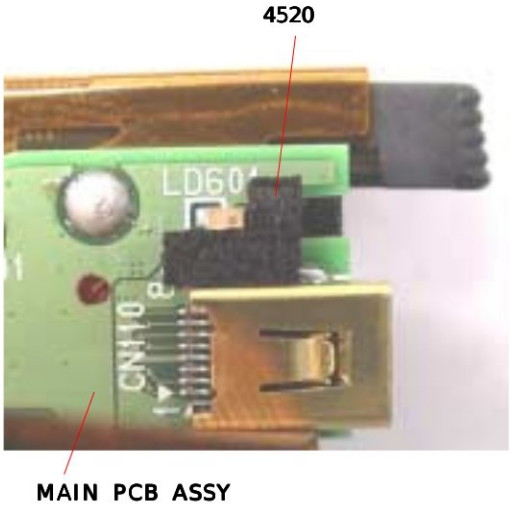

Fig. 5

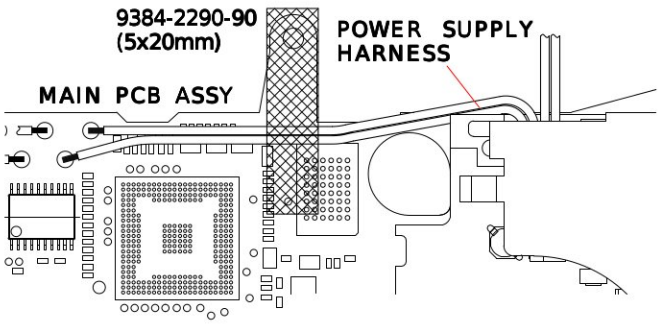

Fig. 6

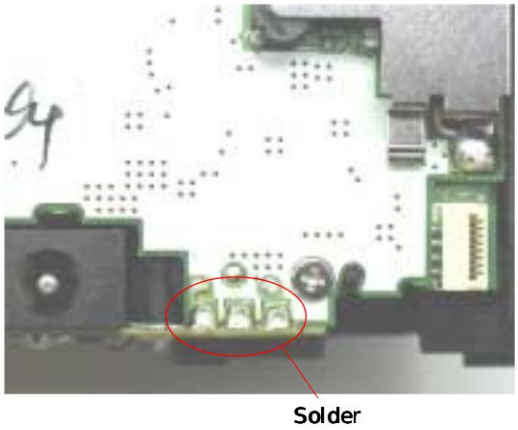

Fig. 7

Fig. 8

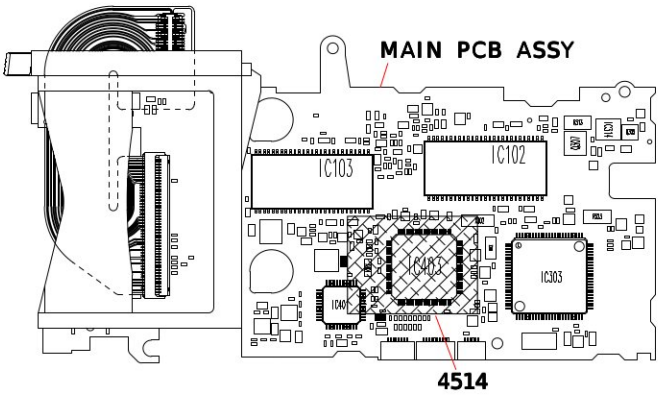

Fig. 9

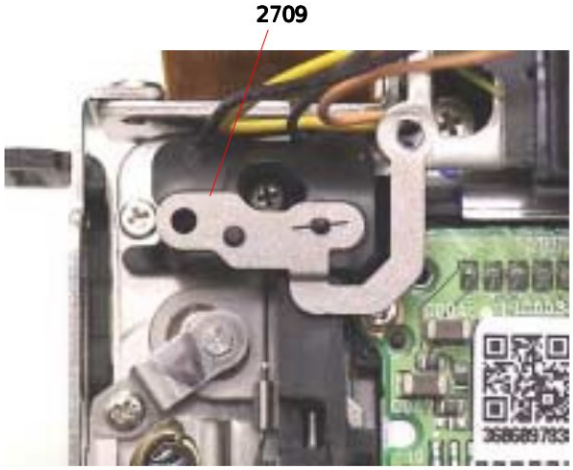

Fig. 10

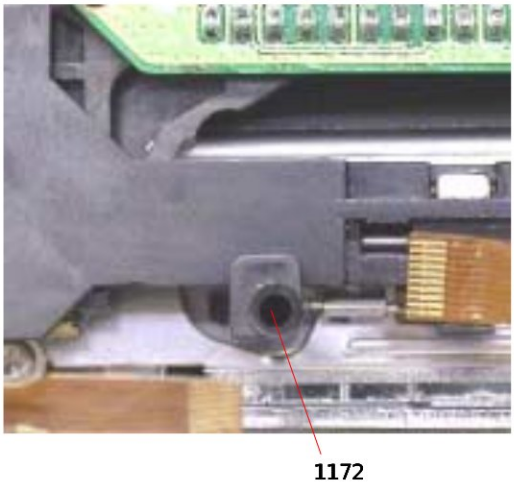

Fig. 11

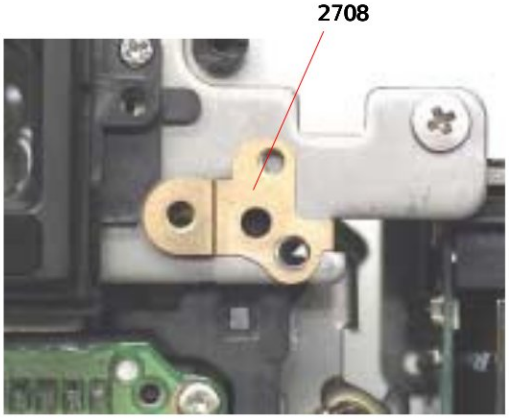

Fig. 12

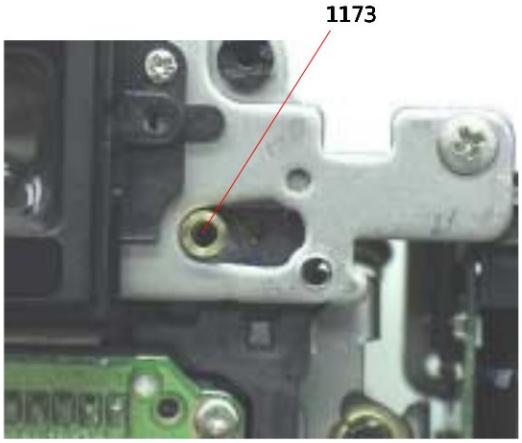

3. Disassembly of the SUB PLATE L, BATTERY CHAMBER

Disassemble it in order of step 1 to 3.

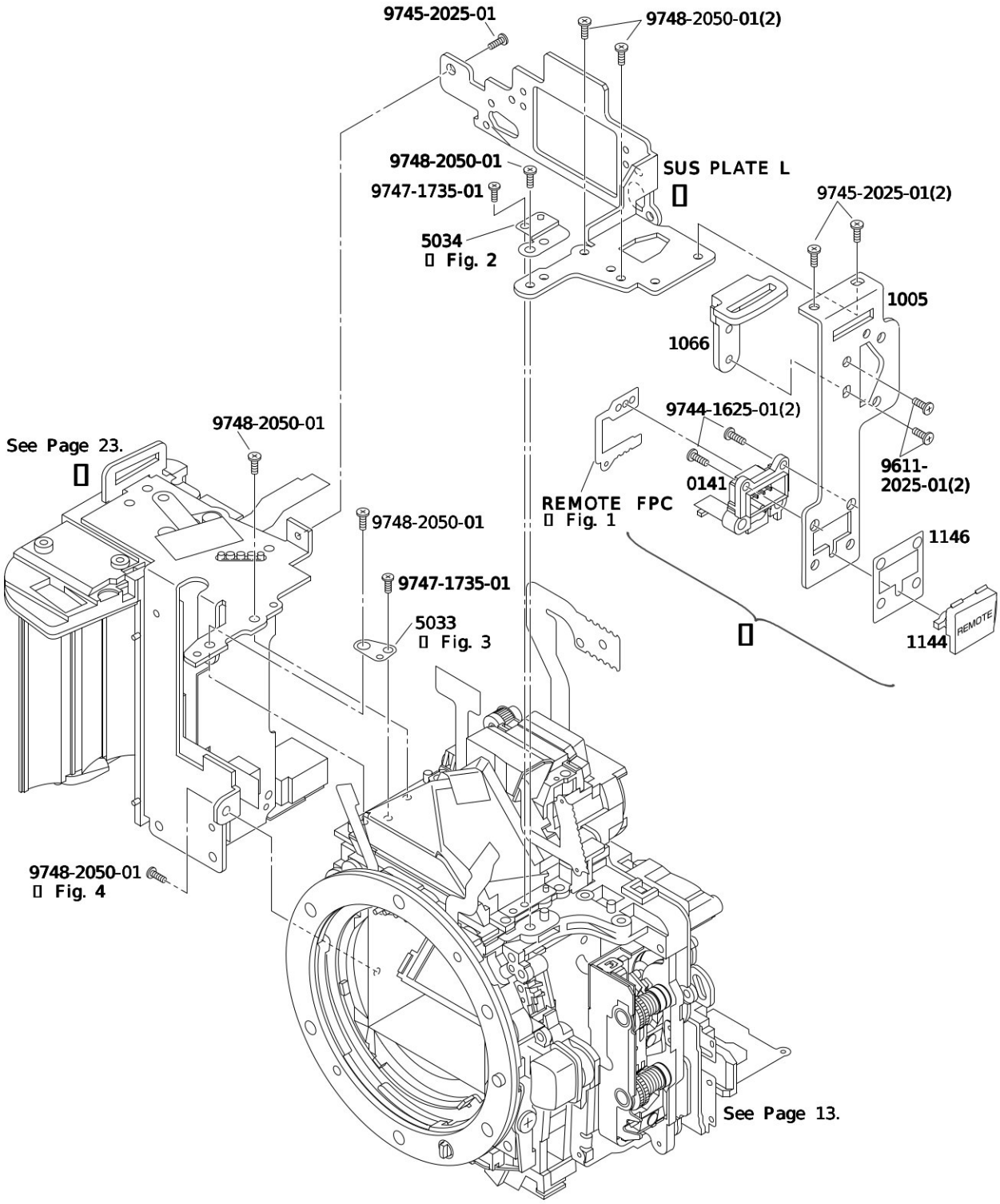

Fig. 1

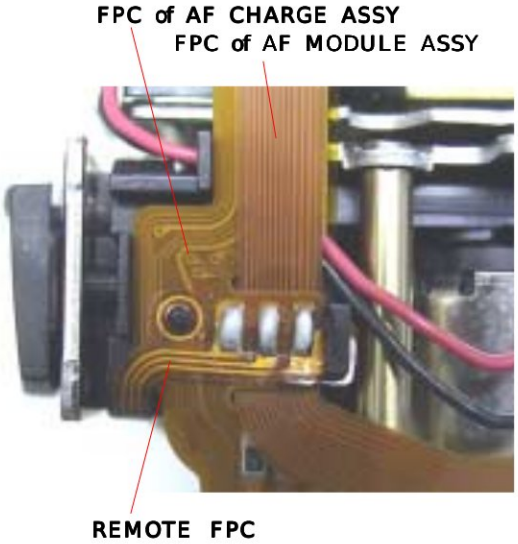

Fig. 2

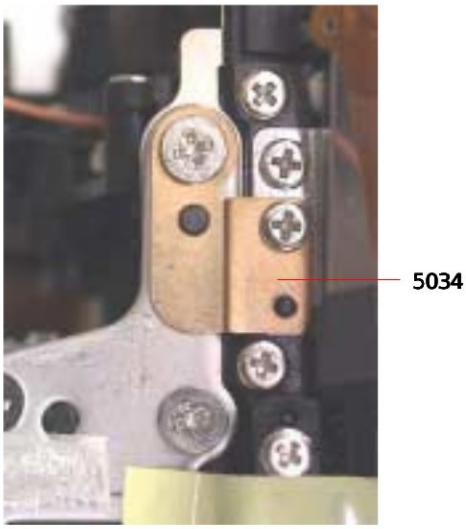

Fig. 3

Fig. 4

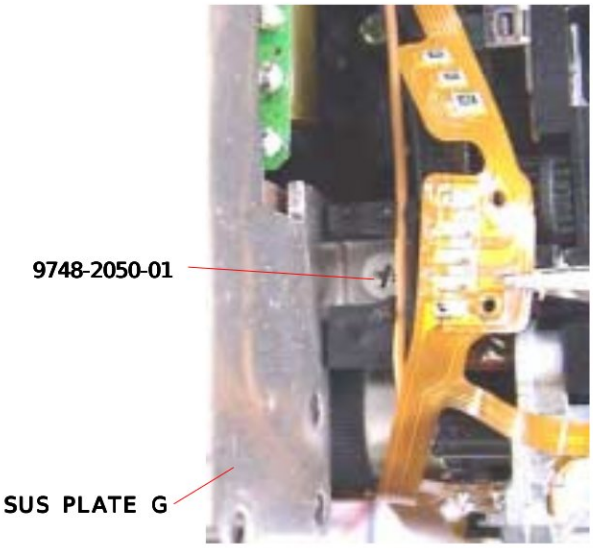

4. Disassembly of the CCD ASSY, SHUTTER ASSY

If CCD ASSY (0271) is exchanged for new one, exchange the bar code on the MAIN PCB ASSY (0410) for the bar code put on the new CCD ASSY.
Disassemble it in order of step 1 to 4.

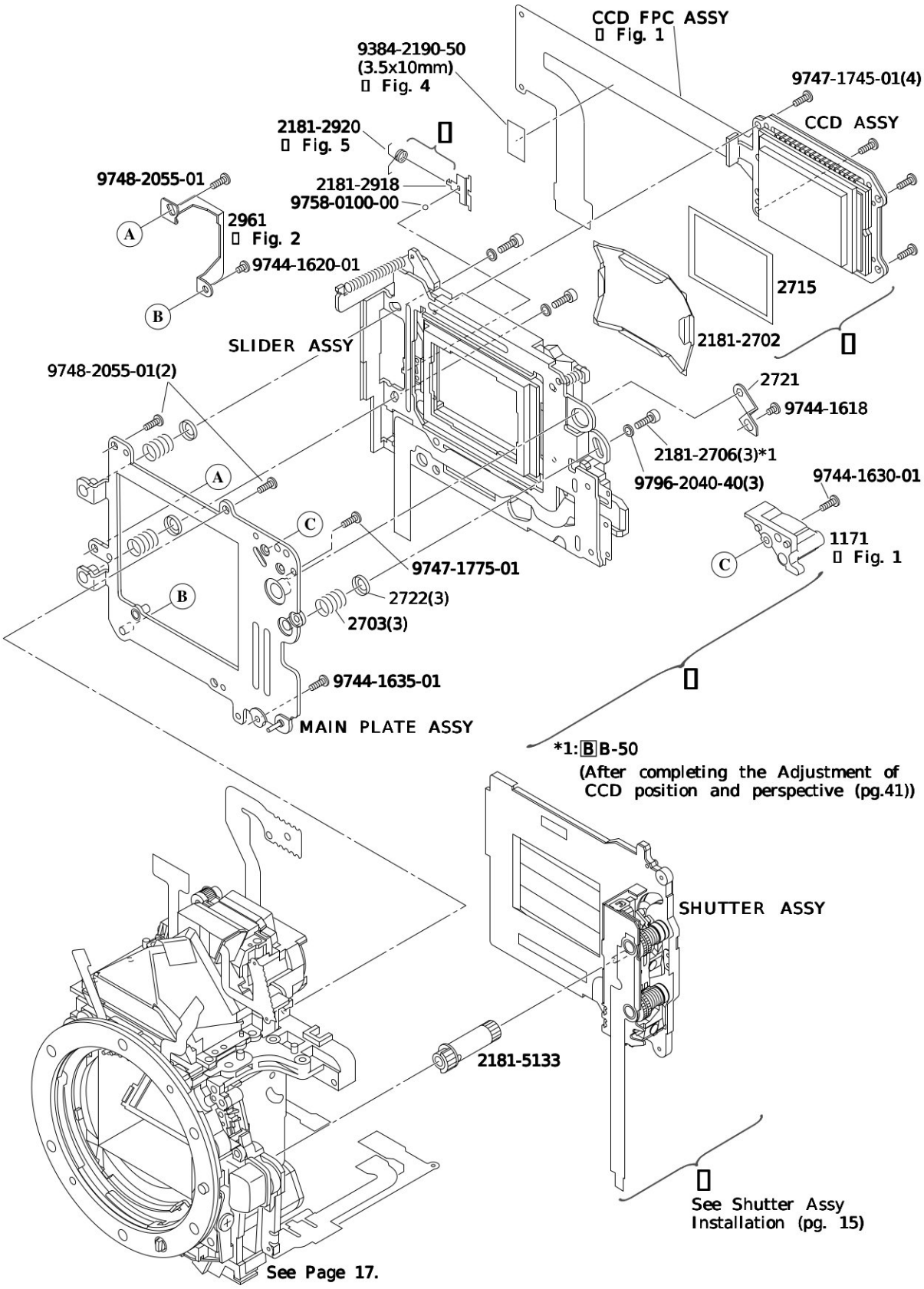

Fig. 1

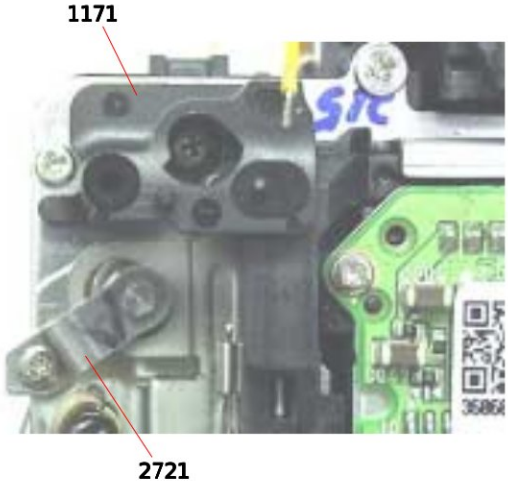

Fig. 2

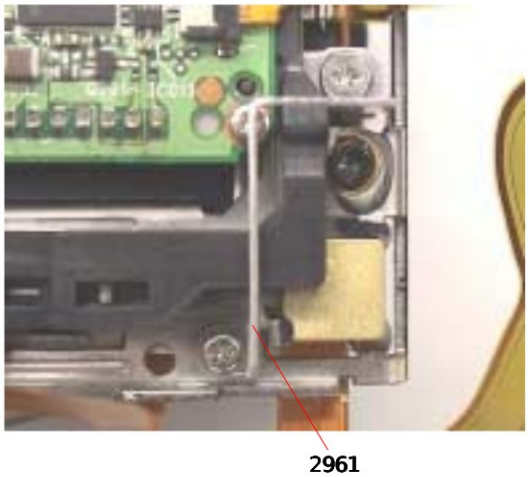

Fig. 3

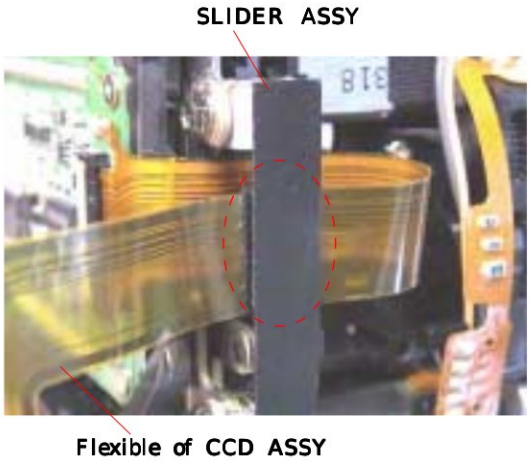

Fig. 4

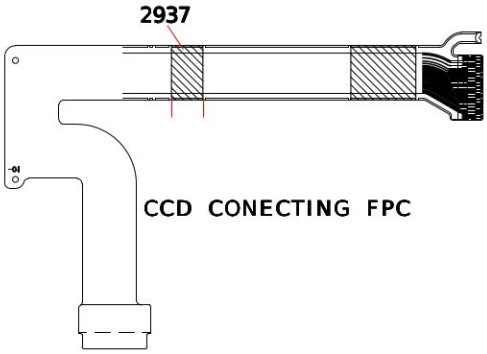

Fig. 5

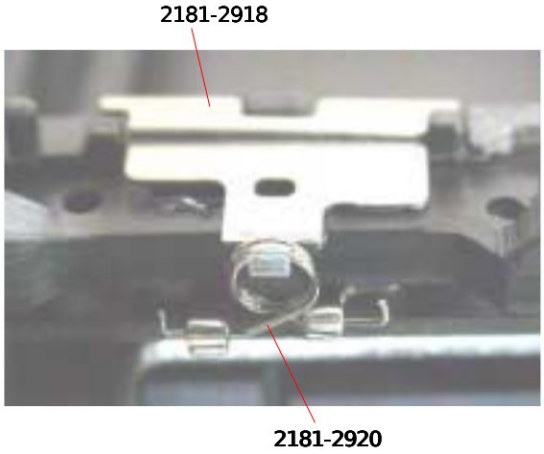

SHUTTER ASSY Installation

1. Supply power to the charge motor at 2V/1A to drive it normally until the mirror raises completely.

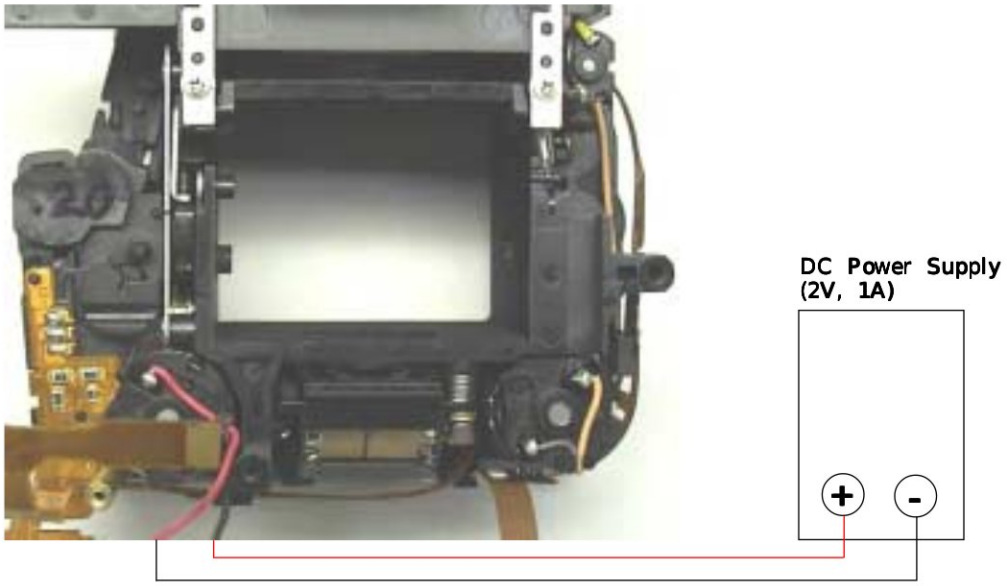

2. Insert screw driver into the hole of SHUTTER CHARGE GEAR, and put SHUTTER ASSY by holding the screw driver at the 90 degrees position shown on the picture.

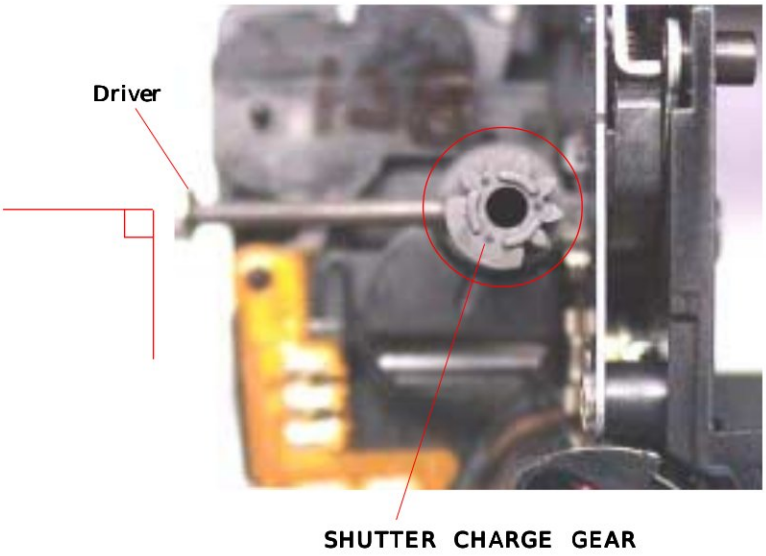

CCD inclination adjustment / repair

Check

Setup the equipments so that the camera faces to a subject at accurate level;

1. Use a copy stand or place a mirror on the wall.
2. Use a 50/1.7 lens for inspection.
3. Measure an angle of gradient by Photoshop.
   If it is beyond +/- 1.0 degree, be sure to implement the Repair method (mentioned later).
   If it is between +/- 0.5 and +/- 1.0 degree, implement the Repair method (mentioned later) upon request of the user.
   If it is within +/- 0.5 degree, implement the Inspection again to correct measurement error.

Adjustment

1. Remove the CCD SLANTING STOPPER. (Fig. 1)
2. Check and adjust of a hexagon eccentric pin. (Fig. 2)
   * 60-degree (0.42 degree of CCD inclination) rotation is possible respectively from a neutral position to a clock and a counterclockwise direction.
   The adjustment over 60 degrees is impossible. (CCD SLANTING STOPPER cannot be attached.)
   Rotate 60 degrees clockwise, when the image slants to the right.
   Rotate 60 degrees counterclockwise, when the image slants to the left.

Fig. 1

Fig. 2

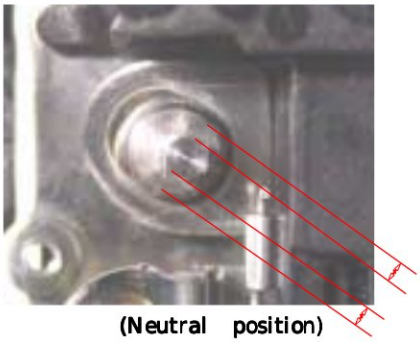

Repair (when it cannot be adjusted by the above adjustment method)

1. Disassemble the body so that the CCD Assy can be removed.
2. Cut the two posts (fig. 3); one for positioning and the other for direction standard between the CCD holder (in the Slider Assy) and the heat sink plate (in the CCD Assy).
3. Install an insulation sheet on the terminal of the CCD Assy or on the contact surface of the CCD holder. (to prevent short-circuit between the CCD terminal and CCD holder)
4. Adjust the position of the CCD Assy and then assemble it.
   When an image tilts to the right, turn it clockwise.
   When an image tilts to the left, turn it counterclockwise.
   The tilt can be corrected approx. +/- 0.7 degree at the max. by shifting double faced tape on the LPF*.
   *Prepare a spare parts of Tebure Assy with the above mentioned step 2 applied separately and shift the position by using it. Donot shift the tape on the user ⍰s Tebure Assy to prevent the Tebure Assy from being broken.
5. Assemble the whole unit.
6. Implement the Inspection.
   If the variance is beyond +/- 0.5 degree, replace the Tebure Assy. Implement the Inspection again.
7. Perform adjustment of CCD AORI & CENTER, camera shaking compensation after the completion of repair.

Fig. 3

REPAIR GUIDE

5. Disassembly-1 of the MIRROR BOX ASSY

Disassemble it in order of step 1 to 6.

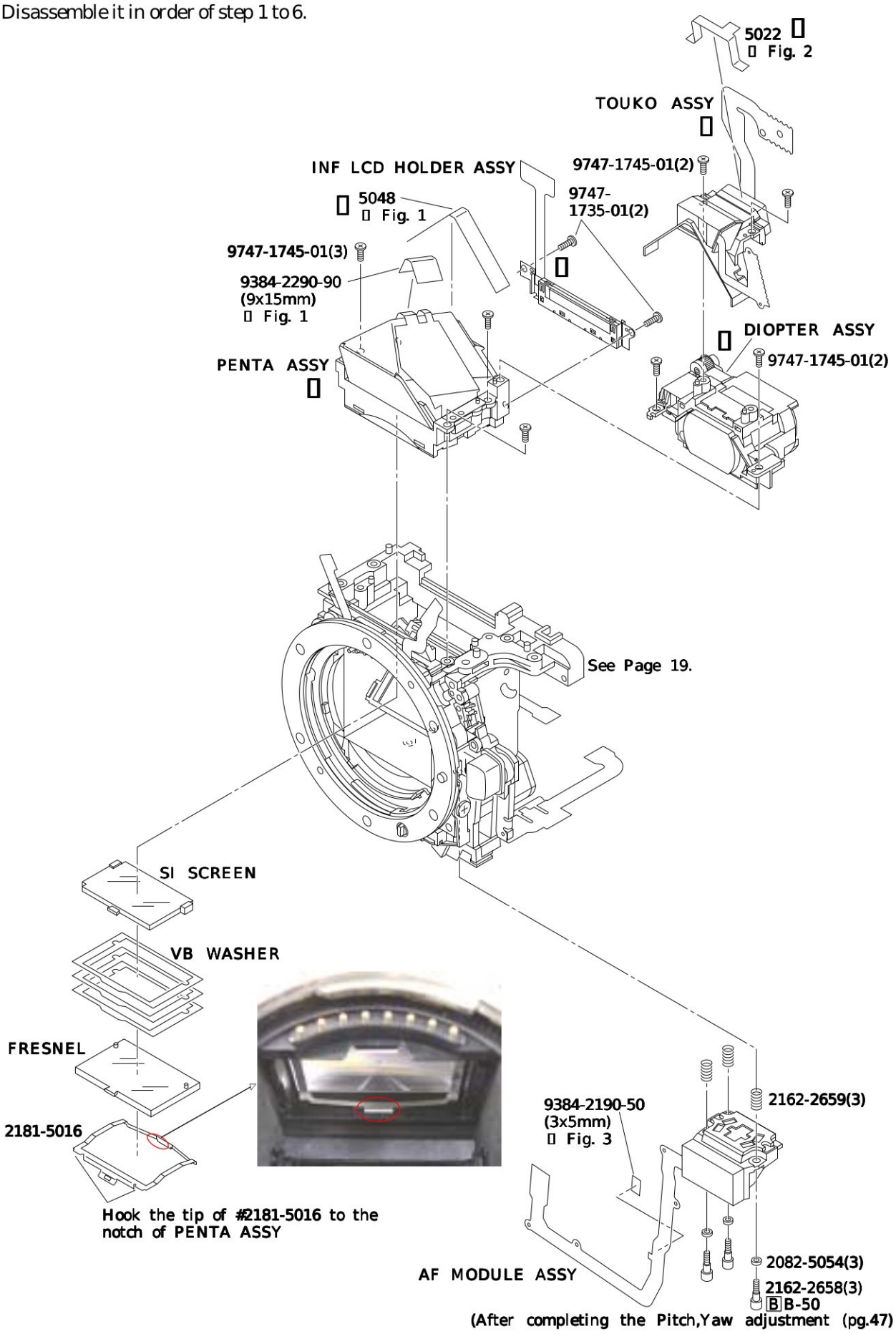

REPAIR GUIDE

Fig. 1

Fig. 2

Fig. 3

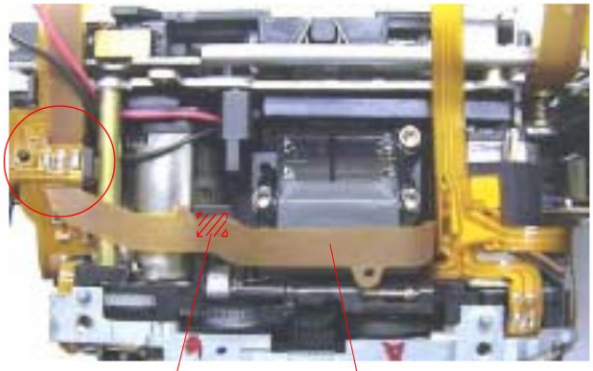

6. Disassembly-2 of the MIRROR BOX ASSY

Disassemble it in order of step 1 to 5.

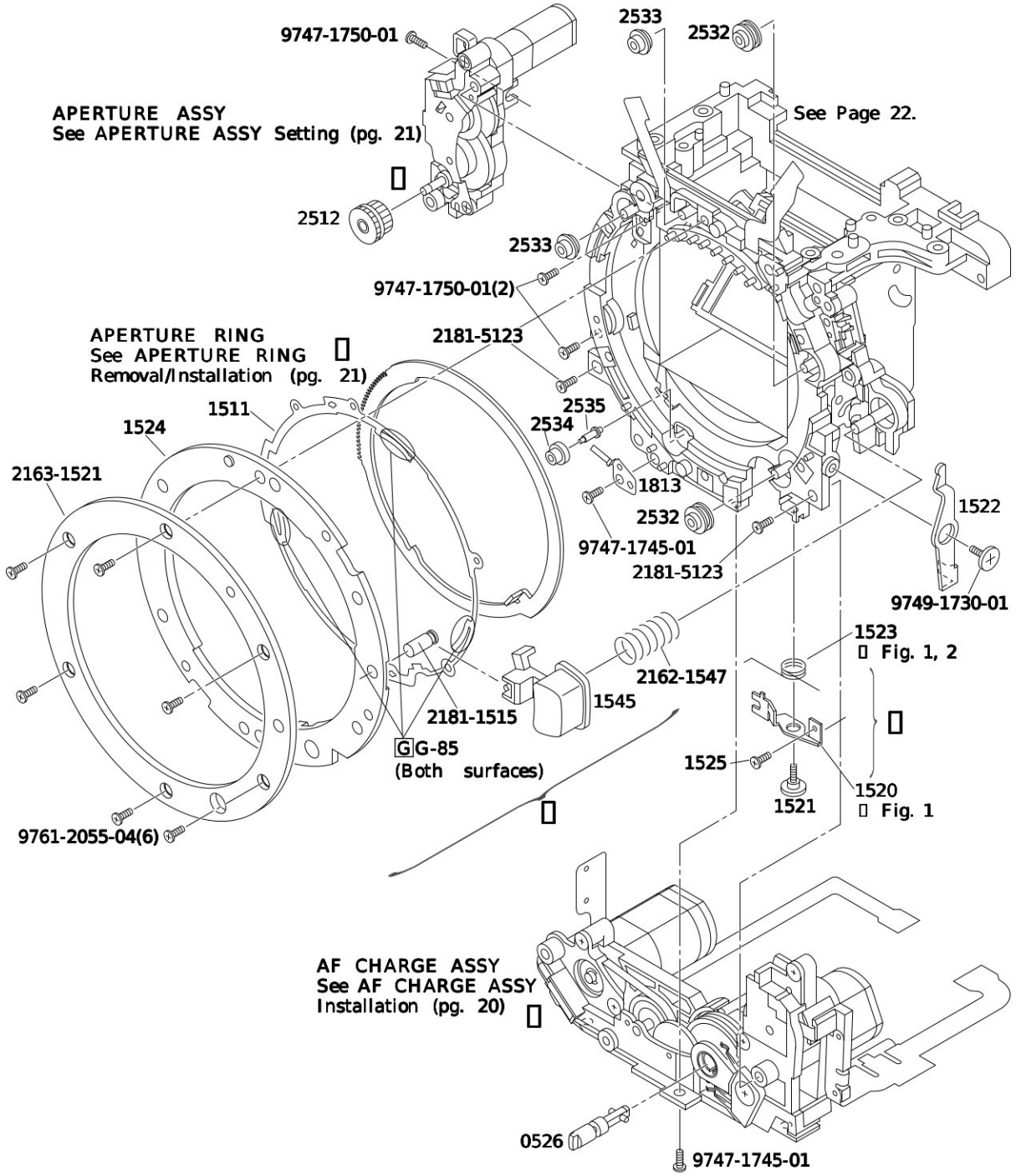

REPAIR GUIDE

Fig. 1

COUPLER LEVER

Fig. 2

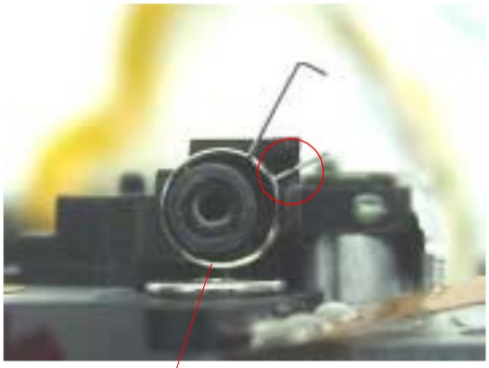

COUPLER LEVER SP

AF CHARGE ASSY Installation

1. Rotate the designated cam-gear in arrow direction while keep pushing the lever against it until the lever descends down to the lowest.
2. Arrange the wires.

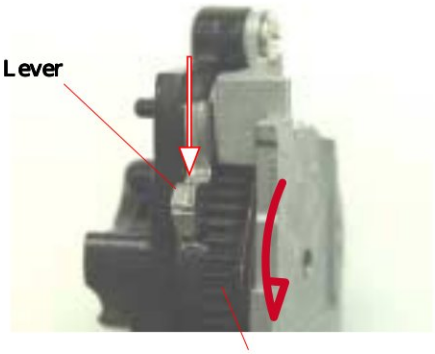

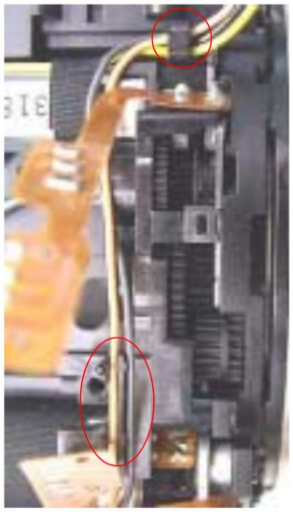

APERTURE RING Removal/Installation

Removal

Turn APERTURE RING clockwise until it stops (Fig. 4). Now the ring can be removed.
Be careful not to turn the aperture coupling gear in APERTURE ASSY.

Installation

1. Set APERTURE ASSY to the charge completion position (default position) referring APERTURE ASSY setting procedure as shown below, then install to FRONT FRAME ASSY.
   APERTURE ASSY is at the charge completion position if it has never been removed, or the aperture coupling gear has not been turned after removing APERTURE RING.
2. Install APERTURE RING so that the punch mark is positioned as illustrated. (Fig. 4)

Fig. 4

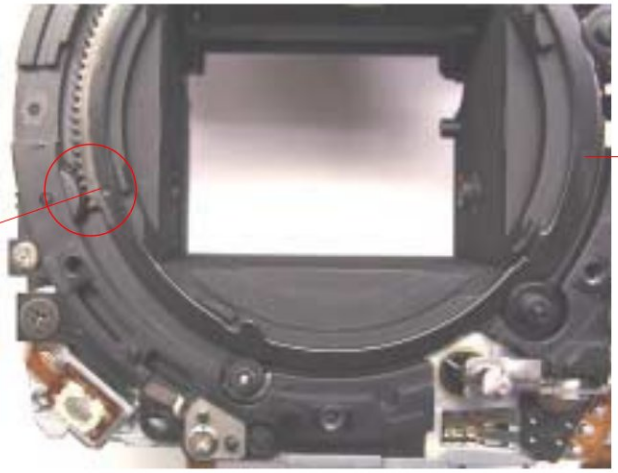

APERTURE ASSY Setting

Firstly confirm APERTURE ASSY is at the charge position (default position).

When the charge position was changed by APERTURE ASSY removal.

1. Reset Position Check
   1-1. Confirm on which side (a or b in Fig. 5) in the square opening (of APERTURE ASSY) the spring leg lies.
   1-2. Turn the APERTURE REDUCTION GEAR in the direction opposite to the spring location (a or b in Fig. 2) until the spring leg moves over to the other side.
   e.g. IF the spring lies at a in Fig. 5, turn the gear toward a in Fig. 5.
   1-3. With the above condition, turn the APERTURE REDUCTION GEAR slightly until its through hole aligns with the through hole of the APERTURE BASEPLATE-A (Fig. 3).

2. Charge position setting.
   2-1. Make sure that APERTURE ASSY is set to the reset position.
   View from the front of APERTURE ASSY.
   Turn APERTURE REDUCTION GEAR to clockwise direction 3 times until its through hole aligns with the through hole of APERTURE BASEPLATE-A
   APERTURE REDUCTION GEAR is set to charge position (default position). (Fig. 5)

Fig. 5

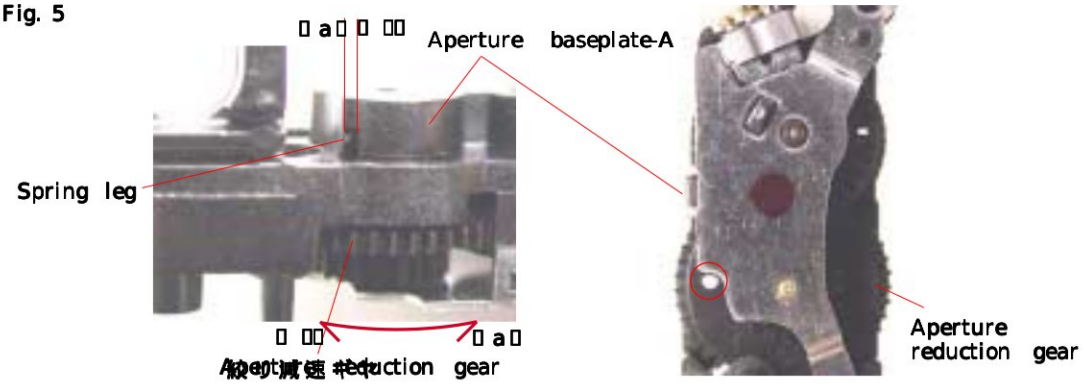

REPAIR GUIDE

7. Disassembly-3 of the MIRROR BOX ASSY

Disassemble it in order of step 1 to 4.

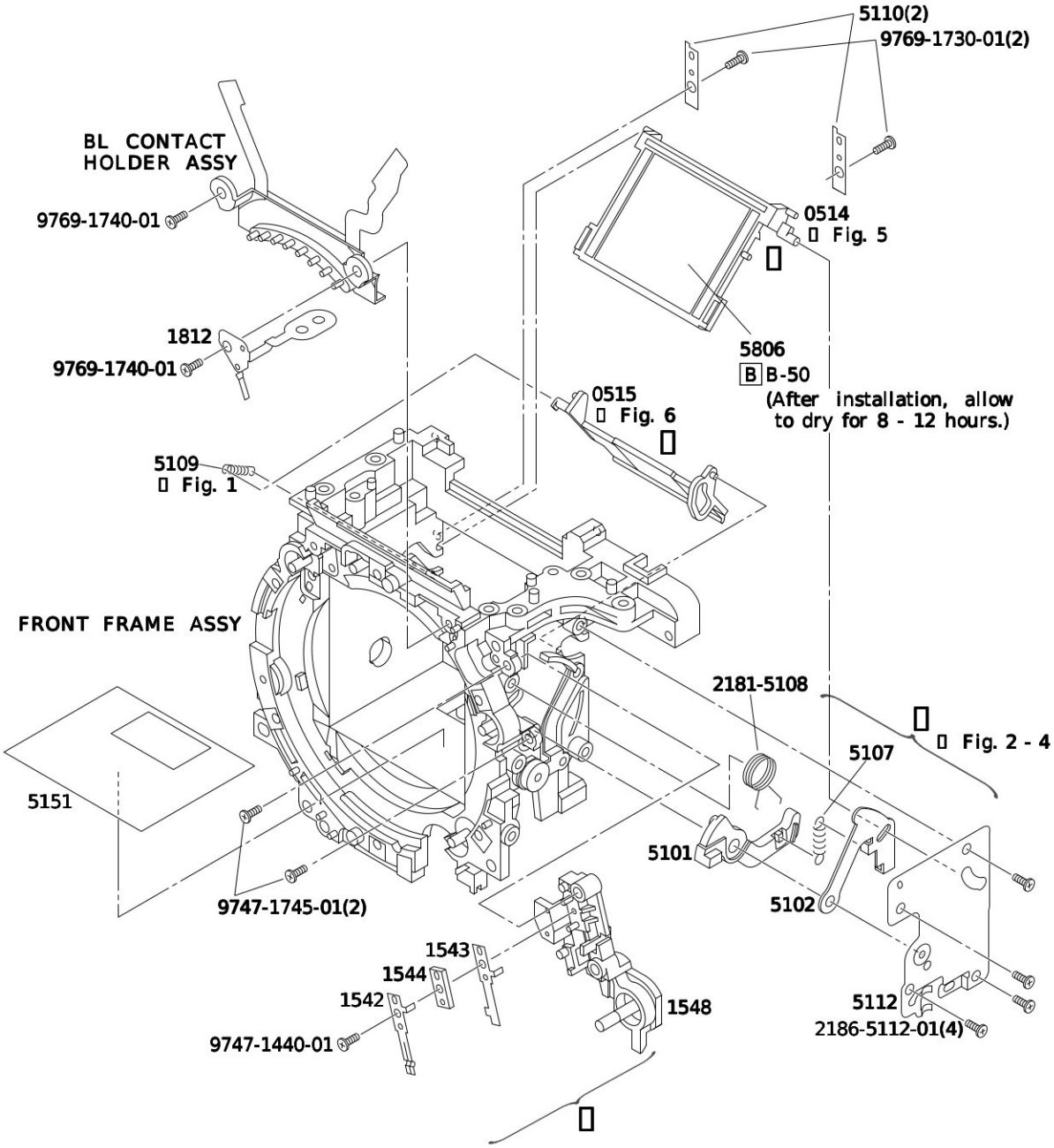

REPAIR GUIDE

Fig. 1

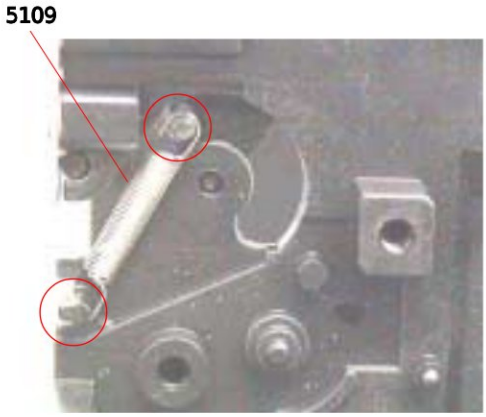

Fig. 2

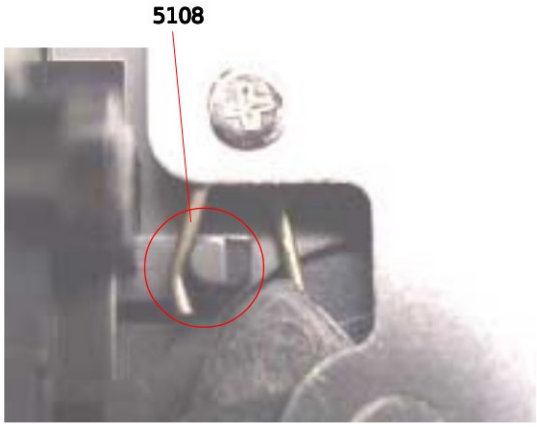

Fig. 3

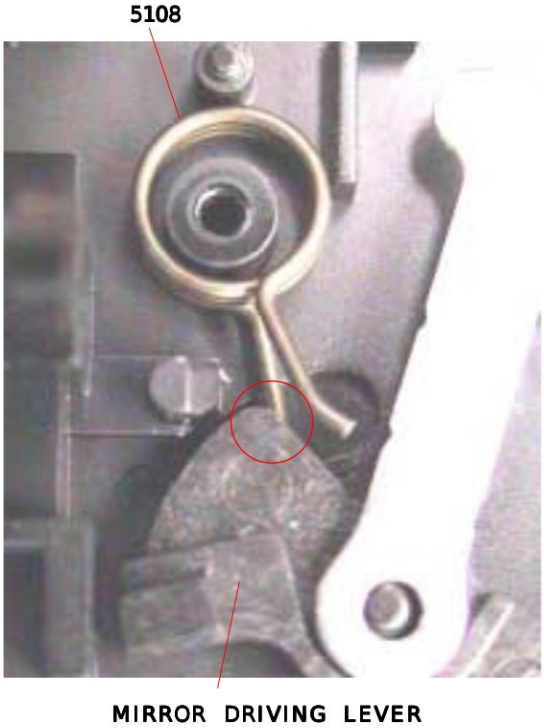

Fig. 4

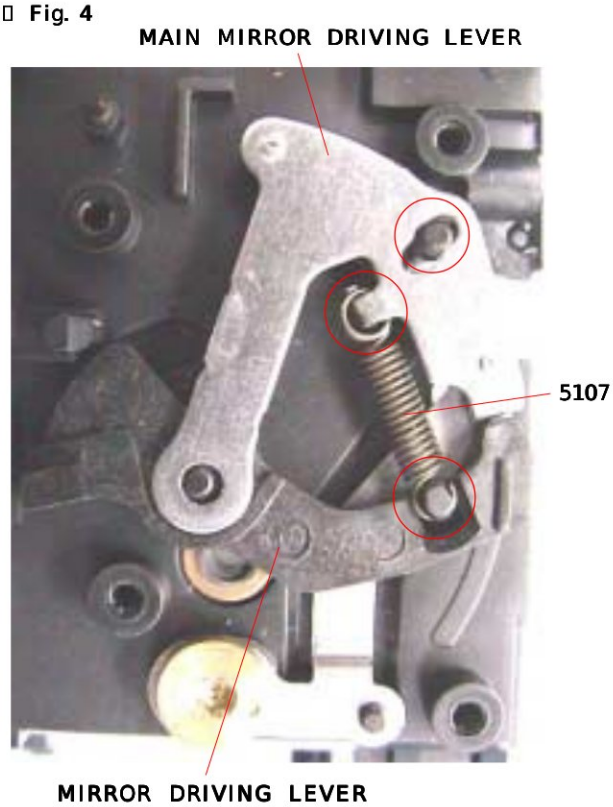

Fig. 5

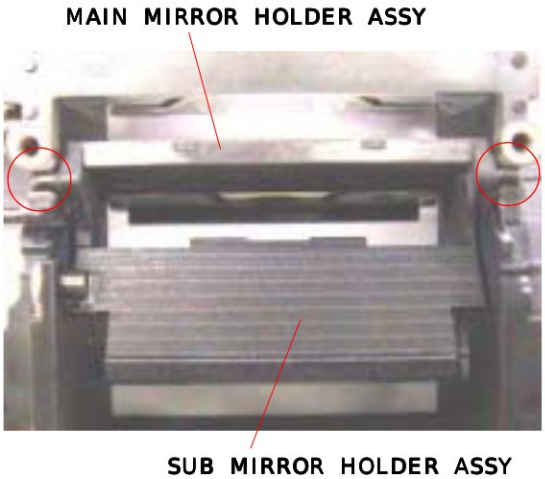

Fig. 6

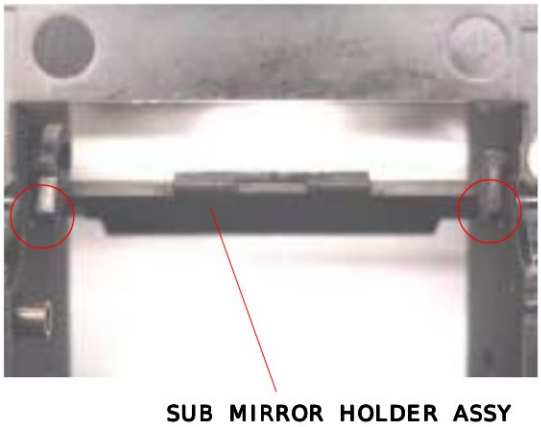

8. Disassembly of the BATTERY CHAMBER, LCD 101

Disassemble it in order of step 1 to 4.

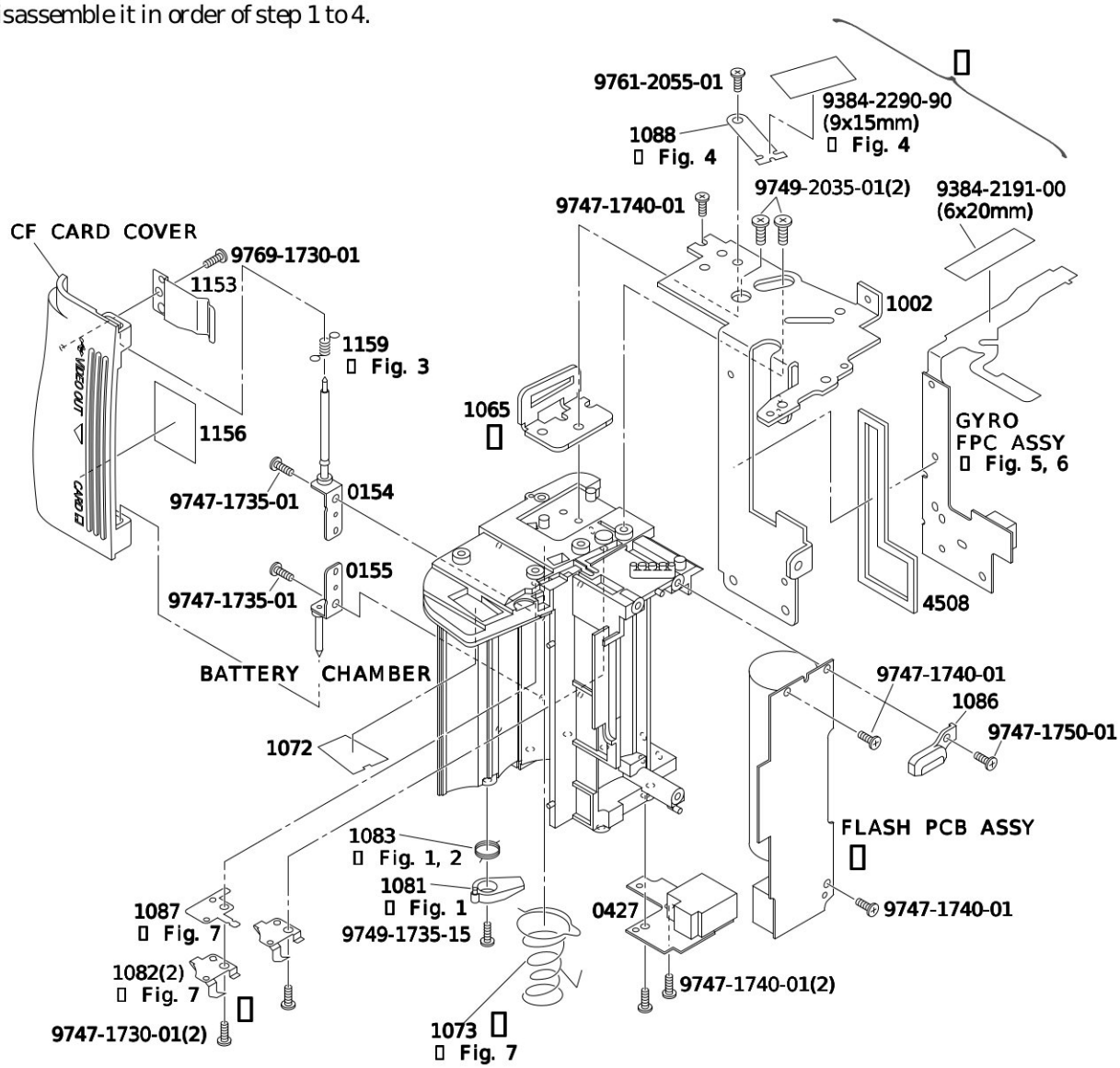

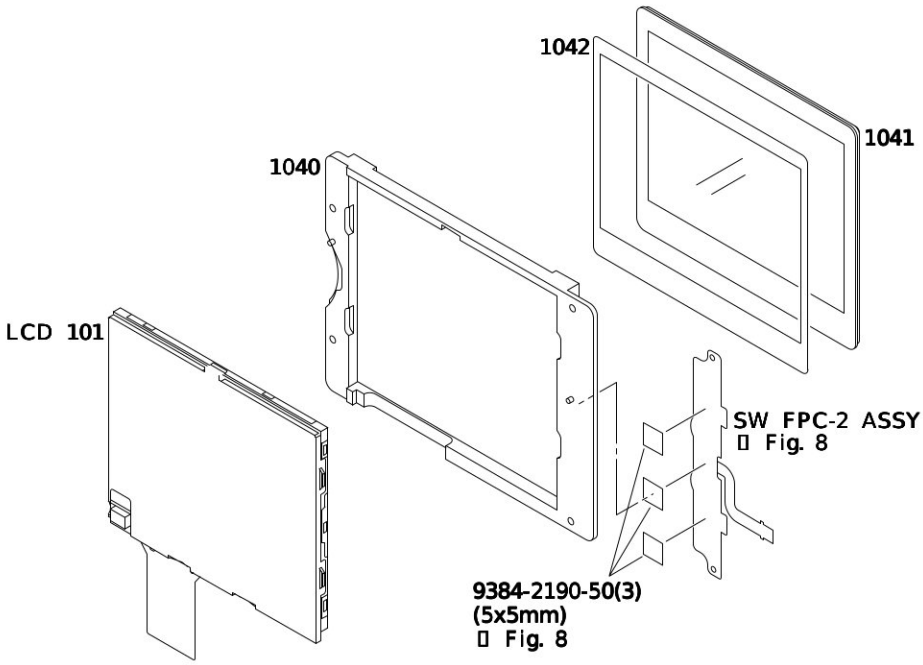

REPAIR GUIDE

Fig. 1

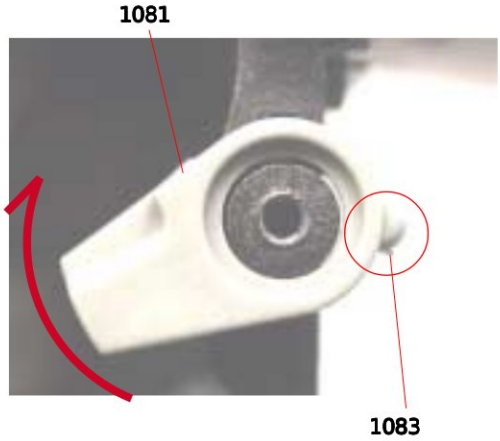

Fig. 2

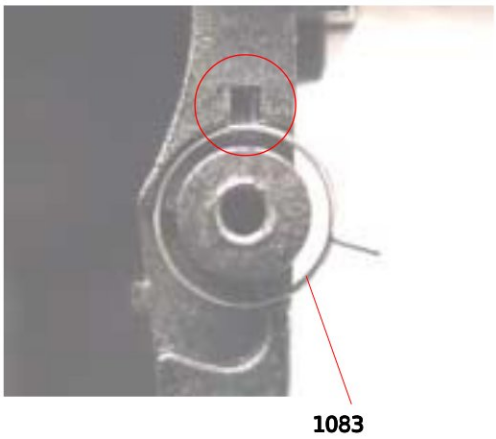

Fig. 3

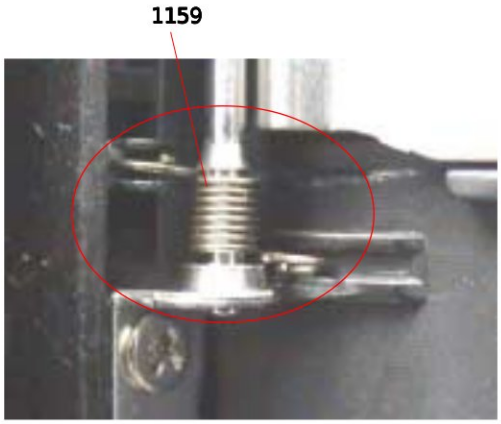

Fig. 4

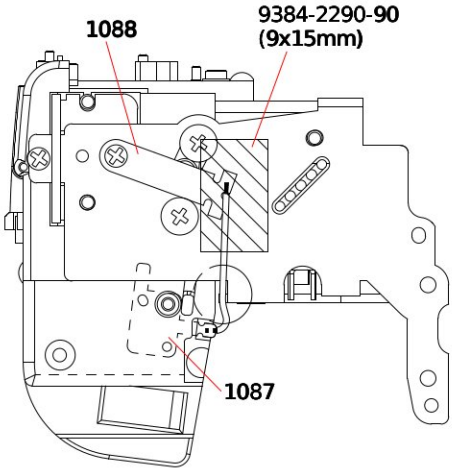

Fig. 5

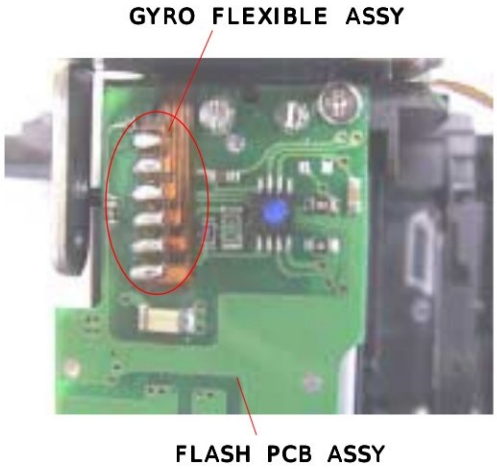

Fig. 6

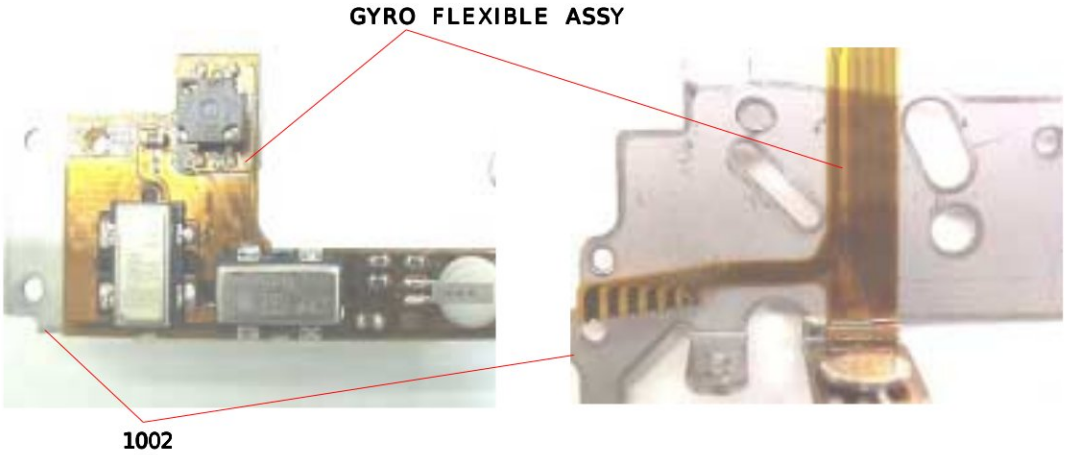

Fig. 7

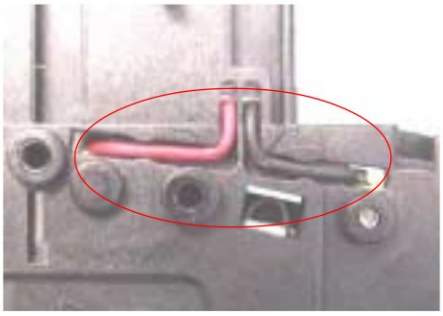

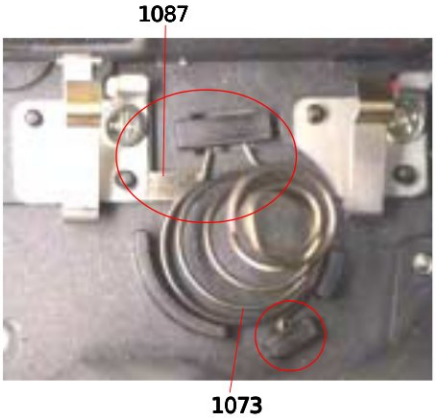

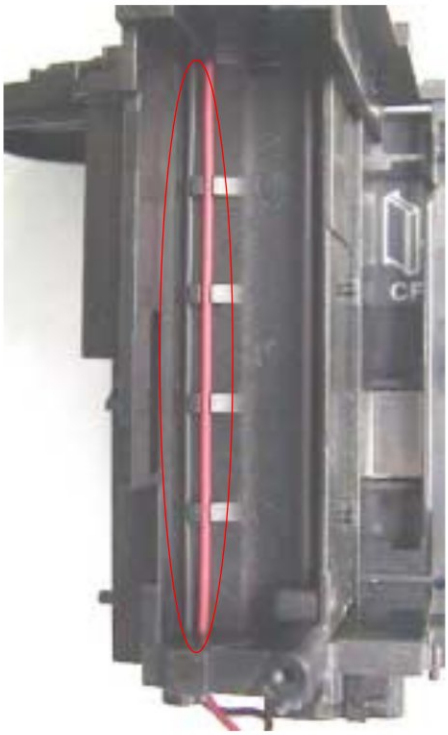

Fig. 8

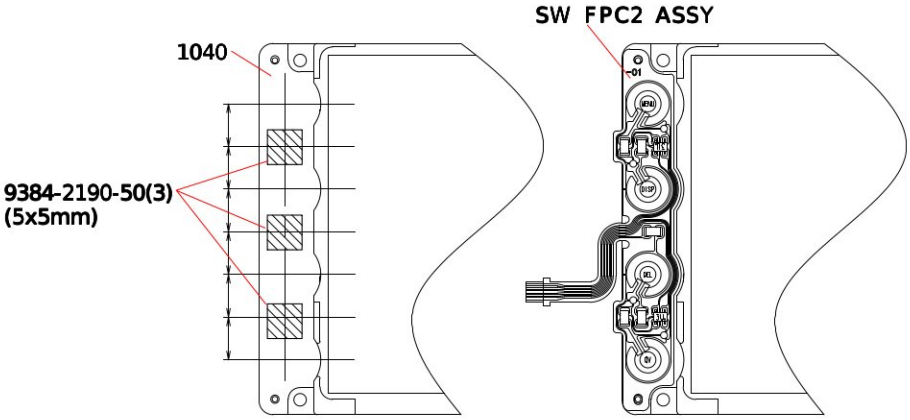

9. Disassembly of the TOP COVER ASSY

Disassemble it in order of step 1 to 11. (Continued to the next page)

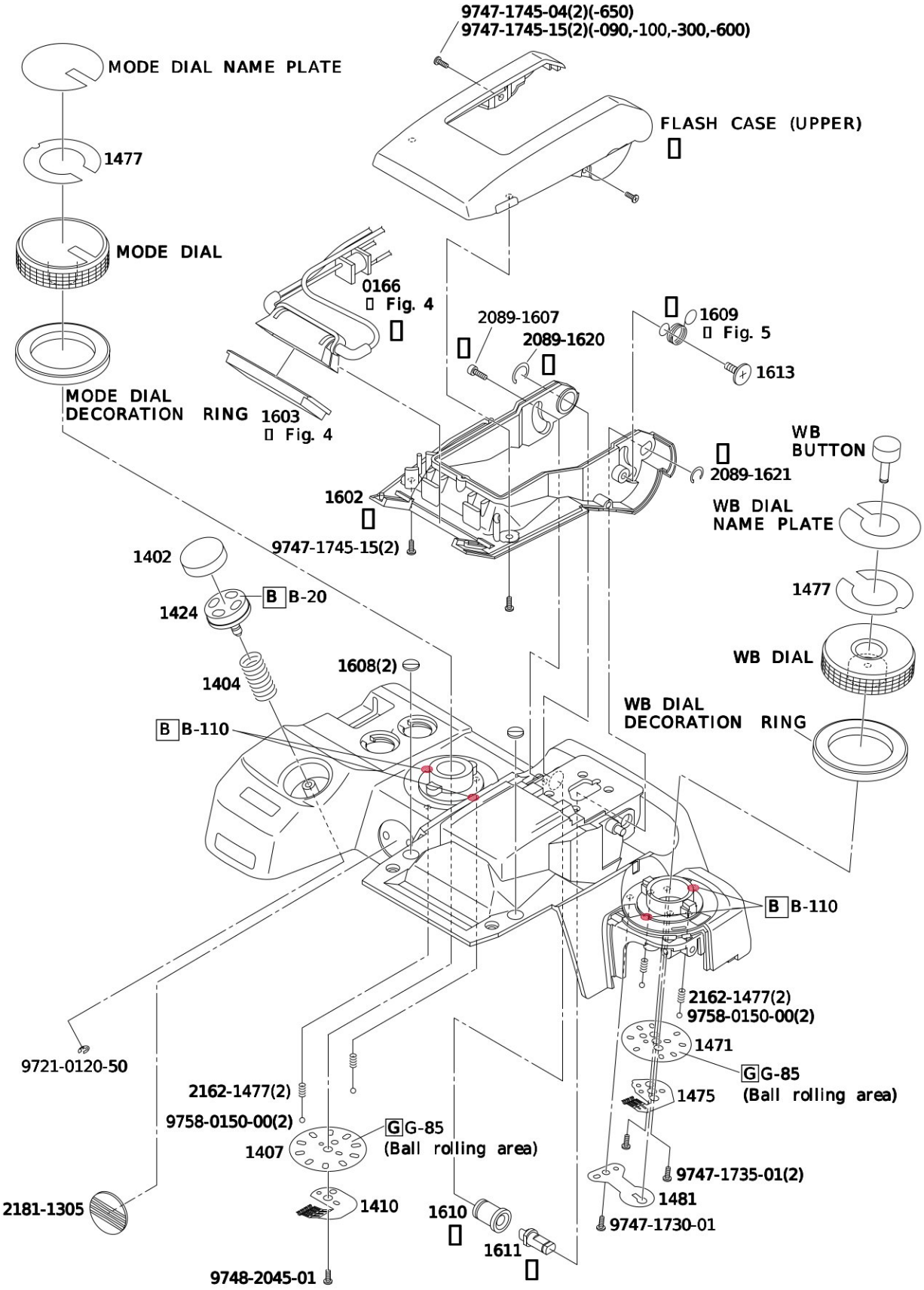

REPAIR GUIDE

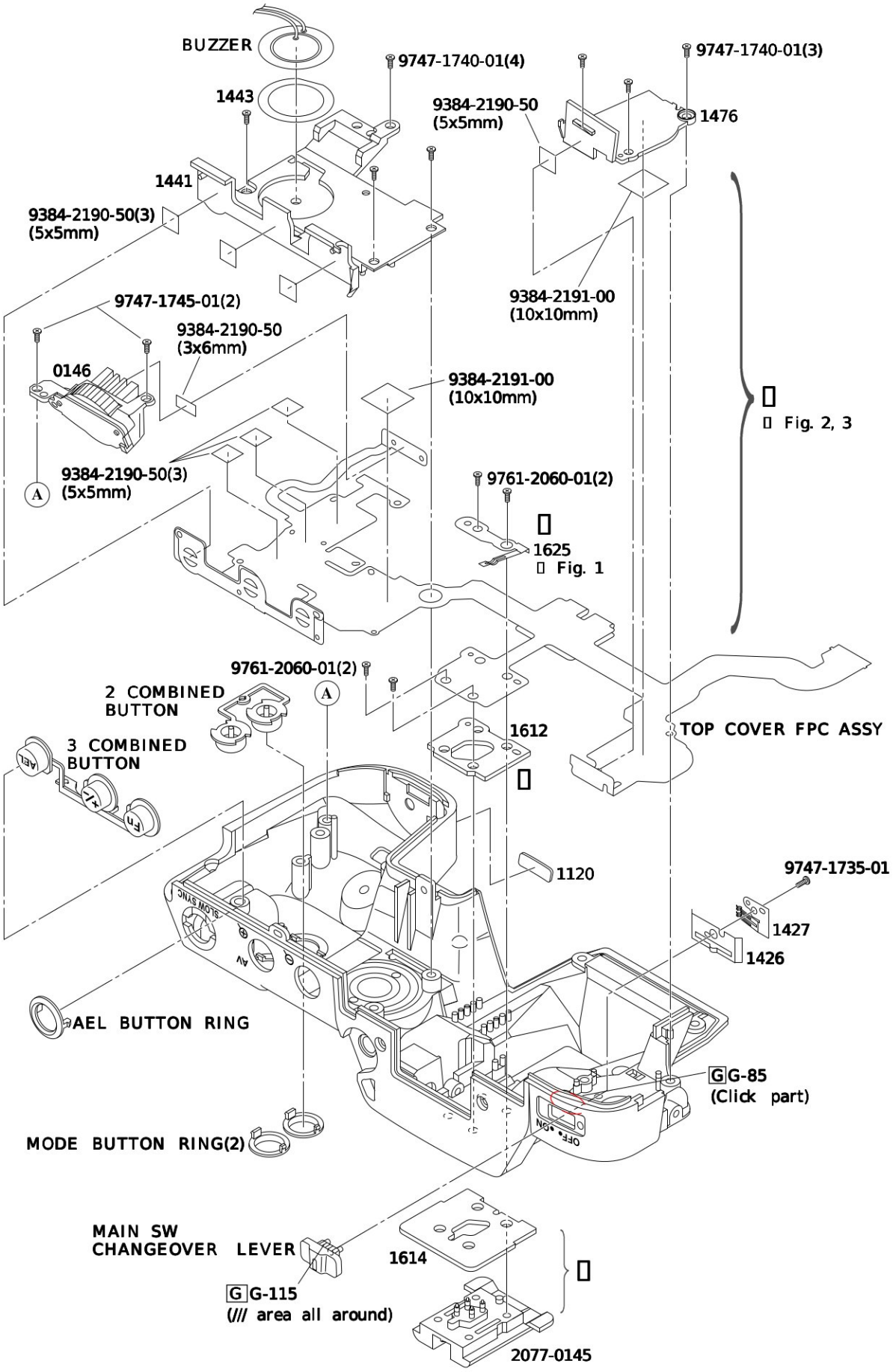
BUZZER
9747-1740-01(4)
9747-1740-01(3)
1443
9384-2190-50
(5x5mm)
1476
1441
9384-2190-50(3)
(5x5mm)
9747-1745-01(2)
9384-2190-50
(3x6mm)
9384-2191-00
(10x10mm)
0146
9384-2191-00
(10x10mm)
Fig. 2, 3
9384-2190-50(3)
(5x5mm)
A
9761-2060-01(2)
1625
Fig. 1
9761-2060-01(2)
A
2 COMBINED
BUTTON
1612
TOP COVER FPC ASSY
3 COMBINED
BUTTON
AEL
1120
9747-1735-01
1427
1426
AEL BUTTON RING
G G-85
(Click part)
MODE BUTTON RING(2)
MAIN SW
CHANGEOVER LEVER
1614
G G-115
(/// area all around)
2077-0145

Fig. 1

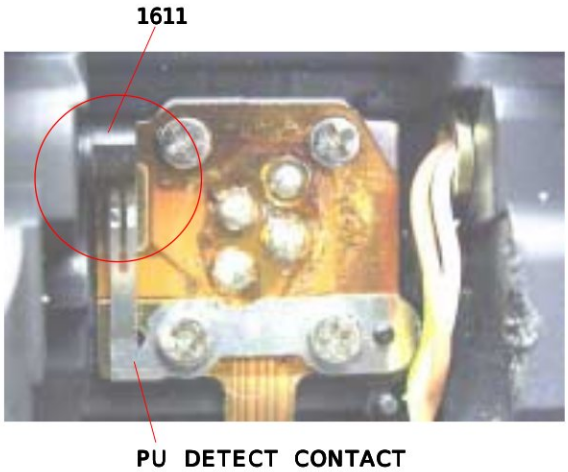

Fig. 2

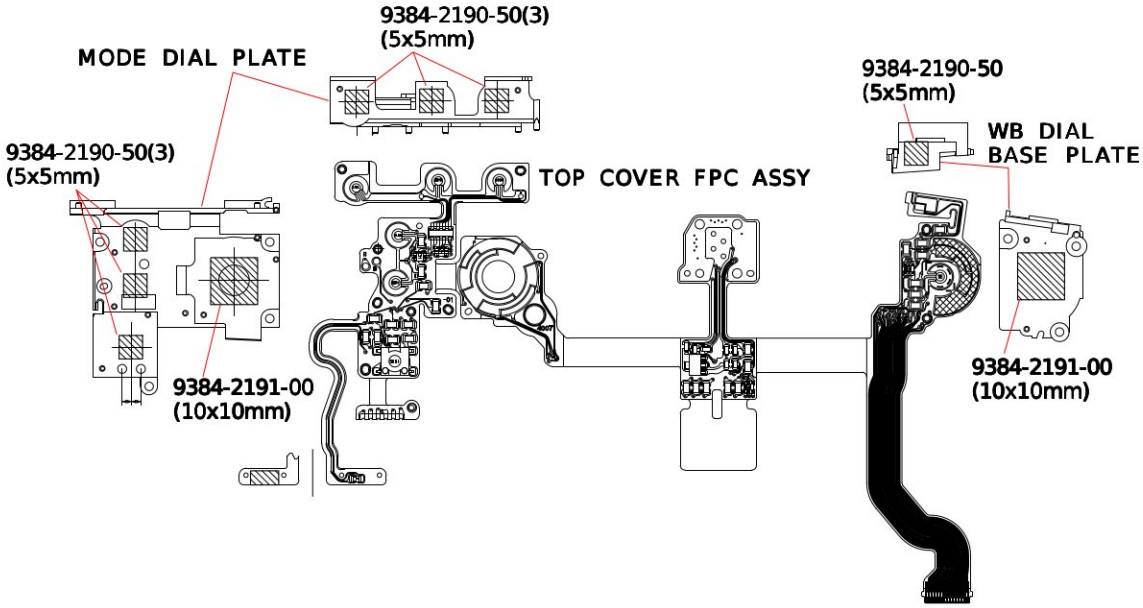

Fig. 3

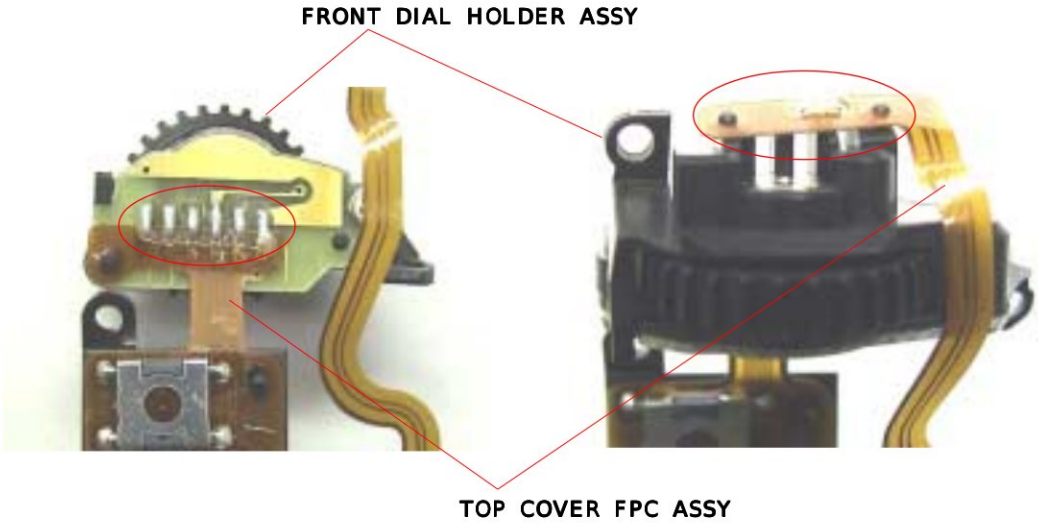

Fig. 4

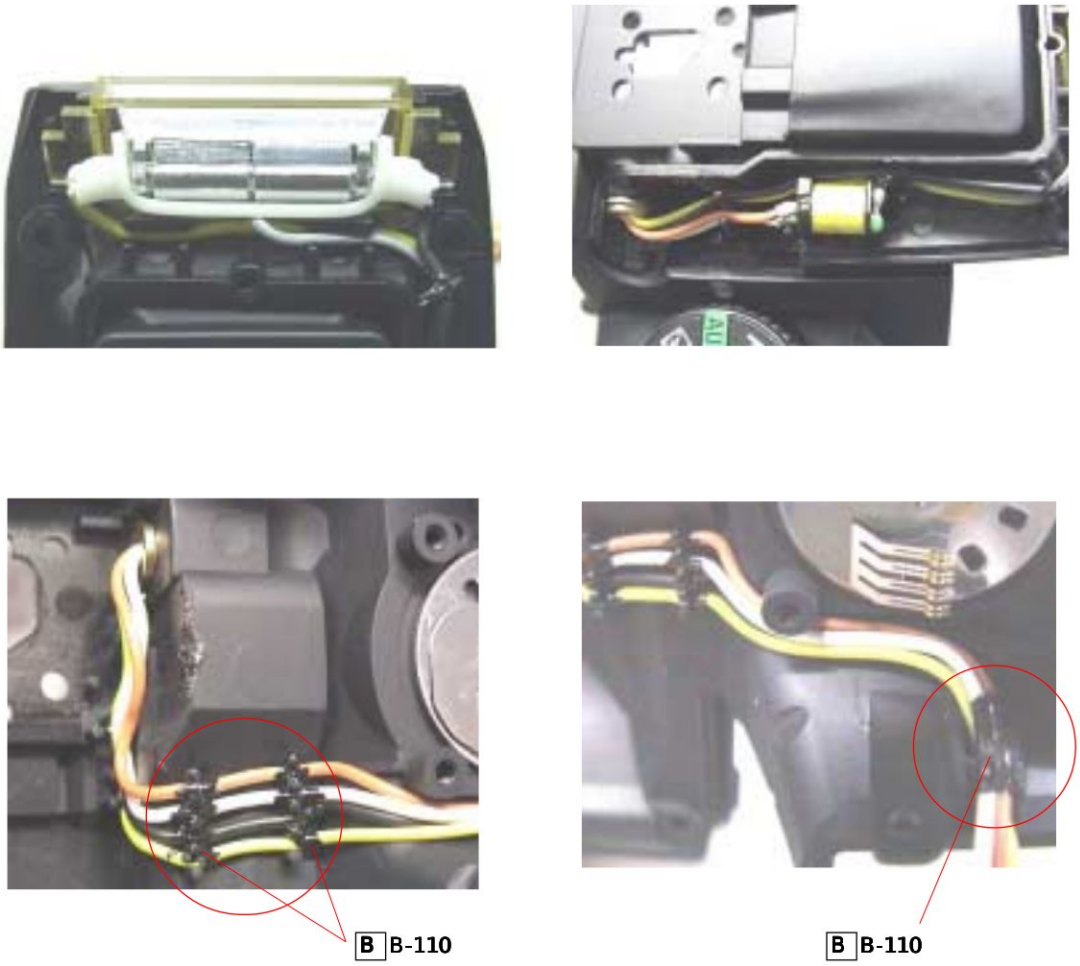

Fig. 5

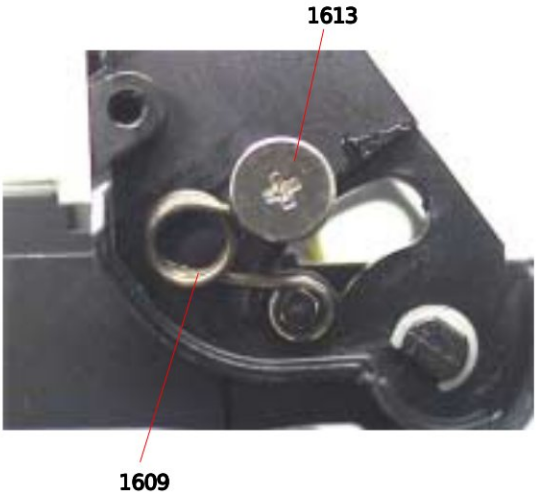

10. Disassembly of the FRONT COVER ASSY, BACK COVER ASSY

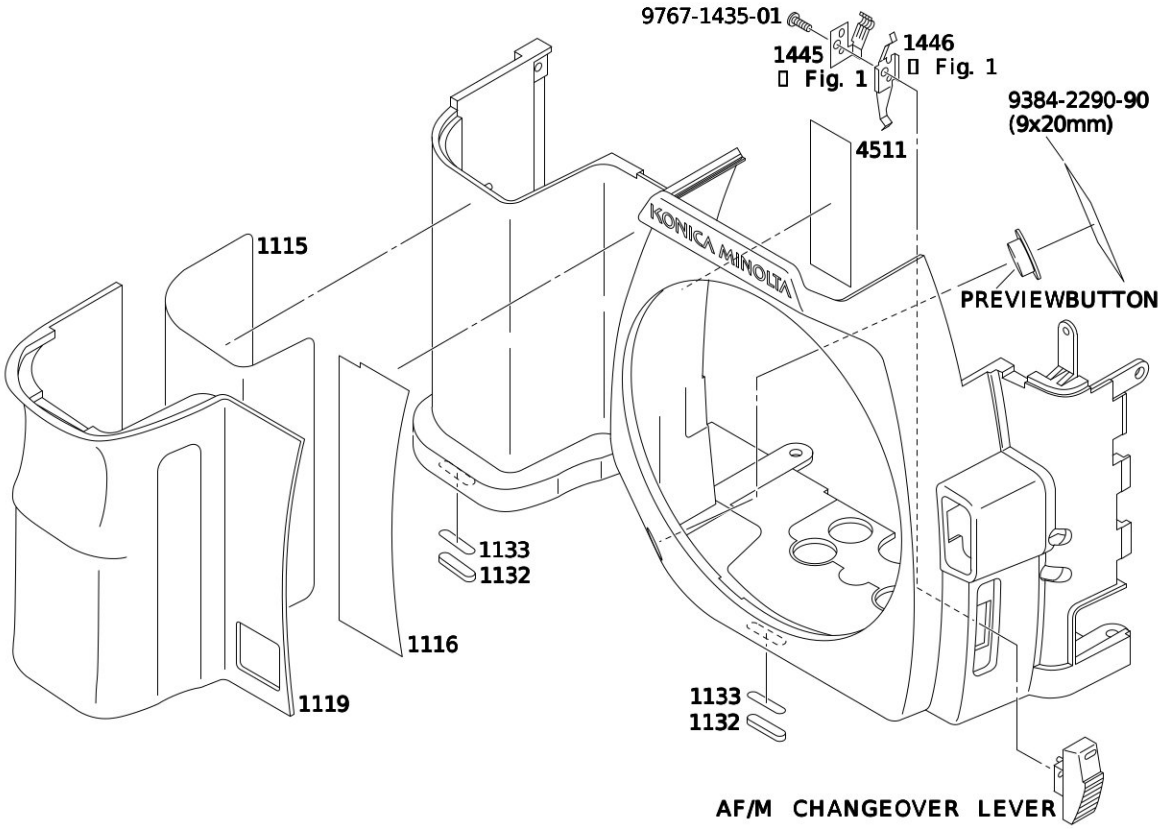

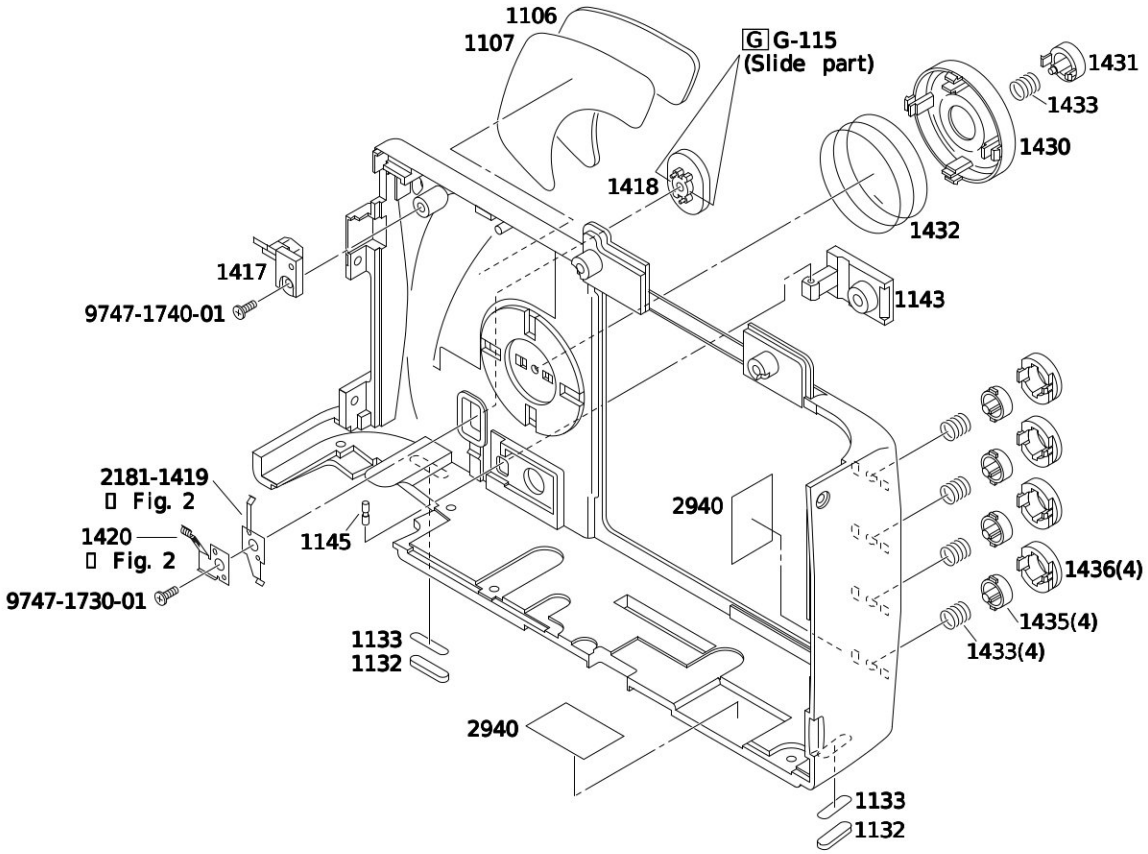

REPAIR GUIDE

Fig. 1

Fig. 2

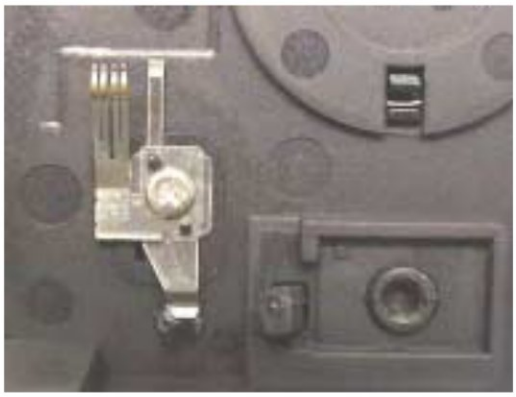

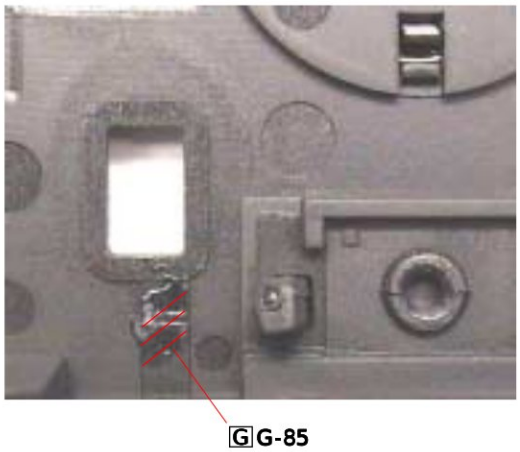

Required adjustment, setting and confirmation items after repairing(exchanging parts)

Adjust, set and confirm as the following table when the following parts are removed (exchanged).
Follow the steps from the upper line to adjust.

Parts / Adjustment/Check	REFLECTOR ASSY (0166)		SHTTER ASSY (0210)		APERTURE ASSY (0254)		AF MODULE ASSY (0265)		CCD ASSY (0271)		MAIN BOARD ASSY (0410)		DCDC PCB ASSY (0402)		FLASH PCB ASSY (0473)		I/O FLEXIBLE ASSY (0406)	
	Removed	Replaced	Removed	Replaced	Removed	Replaced	Removed	Replaced	Removed	Replaced	Removed	Replaced	Removed	Replaced	Removed	Replaced	Removed	Replaced
Viewfinder Back	○	○	○	○	○	○	○	○	○	○	○	○	○	○	○	○	○	○
PI-PR						○						○						
FREQUENCY									○	○		○						
SERVO									○	○		○						
GYRO			○	○					○	○		○			○	○		
VSUB										○		○						
AORI&CENTER	○	○	○	○	○	○	○	○	○	○	○	○	○	○	○	○	○	○
SS	○	○	○	○								○						
AREA	○	○	○	○	○	○	○	○	○	○	○	○	○	○	○	○	○	○
PITCH, YAW	○	○	○	○	○	○	○	○	○	○	○	○	○	○	○	○	○	○
EZ	○	○	○	○	○	○	○	○	○	○	○	○	○	○	○	○	○	○
FLATNESS	○	○	○	○	○	○	○	○	○	○	○	○	○	○	○	○	○	○
PRETRIGGER					○	○						○						
AE												○						
CCD GAIN										○		○						
DEFECT PIXEL										○		○						
WB										○		○						
SHAKE GAIN					○	○			○	○		○			○	○		
DESTINATION												○						
CCD INCLICATION									○	○								
Resolving Power	○	○	○	○	○	○	○	○	○	○	○	○	○	○	○	○	○	○
Exposure Accuracy		○	○	○	○	○				○		○		○			○	○
Built-in Flash	○	○	○	○						○		○		○	○	○	○	○
Grayscales										○		○						
Color Reproduction										○		○						
Current Consumption	○	○	○	○		○		○		○	○	○		○		○		○
B.C.Voltage												○		○				

Parts / Adjustment/Check	GYRO FLEX ASSY (0414)		MIRROR BOX ASSY (0500)		AF CHARGE ASSY (0521)		PENTA ASSY (0580)		TOUKO ASSY (0506)		SLIDER ASSY (0901)		BACK COVER ASSY (0110)		FRONT COVER ASSY (0121,0122)		TOP COVER ASSY (0131,0135)	
	Removed	Replaced	Removed	Replaced	Removed	Replaced	Removed	Replaced	Removed	Replaced	Removed	Replaced	Removed	Replaced	Removed	Replaced	Removed	Replaced
Viewfinder Back	○	○	○	○	○	○	○	○	○	○	○	○					○	○
PI-PR				○		○												
FREQUENCY			○	○							○	○						
SERVO			○	○							○	○						
GYRO	○	○	○	○							○	○						
VSUB																		
AORI&CENTER	○	○	○	○	○	○	○	○	○	○	○	○					○	○
SS	○	○	○	○	○	○	○	○	○	○	○	○					○	○
AREA	○	○	○	○	○	○	○	○	○	○	○	○	○	○	○	○	○	○
PITCH, YAW	○	○	○	○	○	○	○	○	○	○	○	○	○	○	○	○	○	○
EZ	○	○	○	○	○	○	○	○	○	○	○	○	○	○	○	○	○	○
FLATNESS	○	○	○	○	○	○	○	○	○	○	○	○	○	○	○	○	○	○
PRETRIGGER				○														
AE				○			○	○	○	○								
CCD GAIN																		
DEFECT PIXEL																		
WB																		
SHAKE GAIN	○	○	○	○							○	○						
DESTINATION																		
CCD INCLICATION											○	○						
Resolving Power	○	○	○	○	○	○	○	○	○	○	○	○	○	○	○	○	○	○
Exposure Accuracy				○				○		○		○						○
Built-in Flash		○		○				○		○		○					○	○
Grayscales																		
Color Reproduction																		
Current Consumption		○		○		○		○		○		○		○		○		○
B.C.Voltage																		

REPAIR GUIDE

Related adjustment and required setting items

When each adjustment or setting is operated, be sure to follow the related adjustment and setting items listed blow.

Number : Related adjustment items. Adjust and set in order of the number.
□ : Related adjustment items. However, these items mean not to adjust the adjustment order is different (the adjustment should be completed).
None : Unrelated adjustment and setting items (possible to adjust and set solely).

□□□□□□□ □□□□□□□ □□□ / □□□□□□□ □□□	Viewfinder Back	PI-PR	FREQUENCY	SERVO	GYRO	VSUB	AORI&CENTER	SS	AREA	PITCH, YAW	EZ	FLATNESS	PRETRIGGER	AE	CCD GAIN	DEFECT PIXEL	WB	SHAKE GAIN
Viewfinder Back																		
PI-PR													1					
FREQUENCY				1	2													3
SERVO			□		1													2
GYRO			□	□														1
VSUB							1								2	3	4	5
AORI&CENTER						□												
SS															1		2	
AREA										(1)	3	2						
PITCH, YAW									□□□		3	2						
EZ									□	□								
FLATNESS									□	□	1							
PRETRIGGER		□																
AE																		
CCD GAIN						□	□	□								1	2	3
DEFECT PIXEL						□									□		1	2
WB						□									□			1
SHAKE GAIN			□	□	□	□									□	□		

When MAIN BOARD ASSY is exchanged for new one, setting of camera is sometimes changed.
Flash charge is prohibited.
*After Setting of Destination (P. 57), Flash charge is automatically allowed.

Viewfinder Back Adjustment

Equipment Required

1000mm Collimator
AE Master Lens
Magnifier

Adjustment

1. Set up the camera as in Fig. 1, so that the chart is at the center of viewfinder.
2. Set Master Lens to infinity.
3. Check that the chart is in focus.
   If not, Select one or two VB Washers, and install Washer(s) as in Fig. 2.
   In case of front focus: Make VB Washers thinner.
   In case of rear focus: Make VB Washers thicker.

Fig. 1

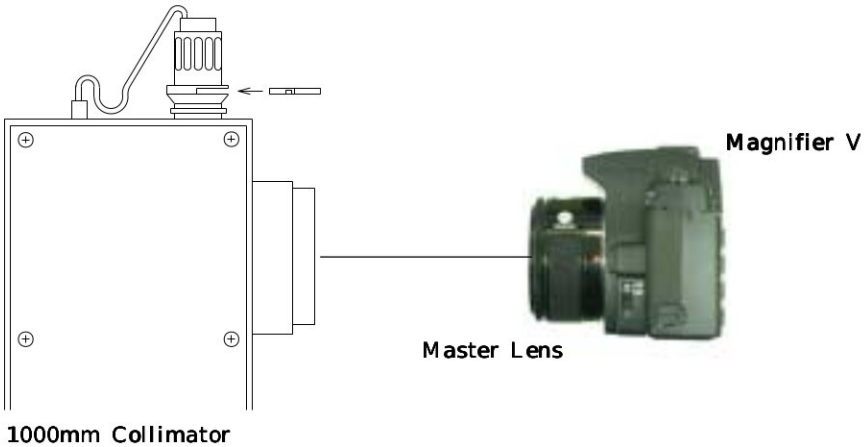

Fig. 2

VB WASHER

	部品番号	T=(mm)
A	2186-5025-01	0.05
B	2186-5026-01	0.1
C	2186-5027-01	0.15
D	2186-5028-01	0.2

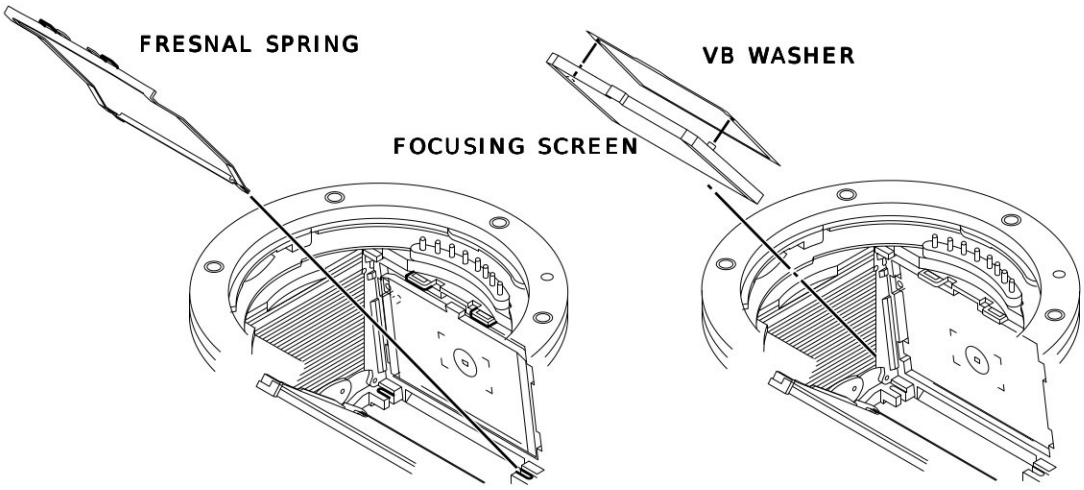

Preparing the 2186 adjustment program

2186 Adjustment Program CD enables adjustment of both 2186 and 2181

PC for use

The PC loaded on either Windows 98/98SE, 2000 Professional or XP and USB terminal originally
40MB or more of available memory and 15MB or more of available hard-disk space
VGA or more monitor capable of displaying at least 32,000 colors

Details of the 2181 adjustment program CD

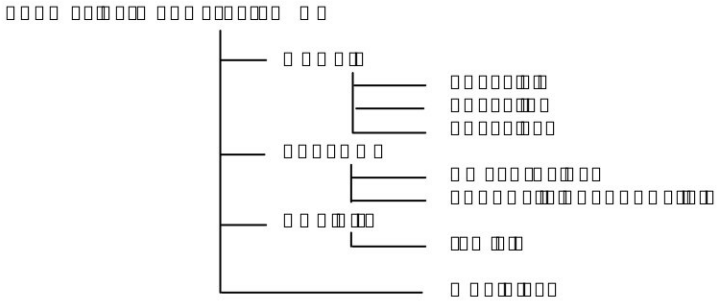

Installation of the 2186 adjustment program

1. Insert the 2186 adjustment program CD into the CD-ROM drive of PC.
2. Copy the "2186 ADJ " folder from CD-ROM to the desktop.

Installation of the USB driver

*This is an example on Windows 2000. On other version of Windows, procedure is a little different.
This USB driver can be used with 2720 or the other A-series cameras. 2186 does not work with the previous drivers for 2720 and earlier models.

1. Copy "USB2.0" folder in the 2186 adjustment program CD to anywhere on PC.
2. Copy the following file from "USB2.0" folder to c:\ Windows\ system folder.
   uusbd.dll
   *Select "Display all" from the file option of Windows.
3. Set the camera to adjustment mode and then start up the 2186 adjustment program, "KMdsc.exe."
   Starting up the 2186 adjustment program (in the adjustment mode) (see P. 37).
4. The new registration for USB is started on PC, and the dialog is opened for specifying USB driver software.
5. Click “next” on “Add New Hardware Wizard” window.
6. Check “Search for the best driver for your device.” and click “next”.
7. Check “Specify a location.” and click “next”.
8. Click “Browse”.
9. Select "uusbd.inf" in "USB2.0" folder.
10. Click "OK" to start searching driver and then “Windows detect the driver of the device” is displayed on the screen. Click “next” to start installation.
11. “Windows has finished installing the software that your new hardware device requires.” is displayed and installation is complete.

Confirmation after installation (In case of using Windows 2000)

12. Right click on “My Computer” icon and select “Properies”.
13. Select “Hardware” tab and click “Device Manager” button.
14. Check whether “Universal USB Driver (Adjust)” is displayed under the tree of “USB device for UUSBD”.

Make CF card for Adjustment (Used for starting adjustment mode of camera)

1. Insert the 2186 adjustment program CD into the CD-ROM drive of PC.
2. Copy ram.bin in Adj Firm folder of CD-ROM to the root of CF card.

REPAIR GUIDE

Starting up the 2186 adjustment program (in the adjustment mode).

Outline

Connect the camera and PC with USB-2 and start up the camera in the "adjustment mode."
"Adjustment mode" means the condition of that the camera can contact with the 2186 adjustment program in the PC.

Starting up the 2186 adjustment program (in the adjustment mode).1

1. Set camera to M mode.
2. Turn the Main switch off, and then turn it on with pressing and holding the UP key of the controller, Menu button, and shutter release button partway down (S1).
   Frame counter will be BBBB and the camera starts up in adjustment mode. (Fig.1)
3. Connect camera and the PC with USB cable, after starting camera by adjustment mode.
4. Start up the 2181 adjustment program, "KMdsc_cs.exe."
   Please select camera code. appears.
5. Select 2186 from CAMERA CODE in the window, according to the display.
   Please connect a camera and click START. appears.
6. Click the START button.
   Camera Boot mode READ-OUT has completed. appears. (Fig. 2)

Starting up the 2186 adjustment program (in the adjustment mode).2

In the condition that a function button cannot be used such as Aori adjustment, start up the camera using a CF card with adjustment program.

1. Insert the CF card with Main switch on, no power supply (battery), M mode.
2. Connect camera and the PC with USB cable.
3. Insert battery (power supply) while pressing the lens lock button.
4. Release the lens lock button after access lamp lit, The camera starts from the CF card.
   Frame counter will be BBBB and the camera starts up in adjutment mode. (Fig.1)
5. Same as 4, 5, 6 of the above method 1.

Fig.1

Fig.2

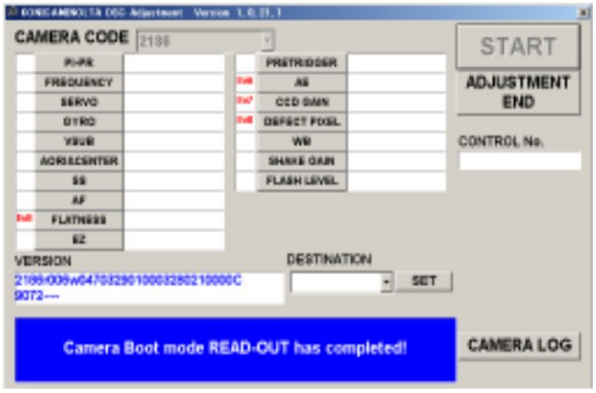

Quitting the 2186 adjusting program and cancel adjustment mode of camera

1. Click "ADJUSTMENT END" in the window of the 2186 adjustment program.
2. Remove the AC adapter or battery.

Adjustment items in the 2186 Adjustment Program

PI-PR
FREQUENCY
SERVO
GYRO
VSUB
AORI & CENTER
SS
AF (AREA , PITCH /YAW)
FLATNESS
EZ
PRETRIGGER
AE
CCD GAIN
DEFECT PIXEL
WB
SHAKE GAIN
FLASH LEVEL
DESTINATION

Adjustment of the PI-PR

Required equipment

PC with preinstalled the 2186 adjustment program
USB-2 (USB cable)
AC Adapter AC-11

Procedure of the adjustment

1. Set camera to adjustment mode.
   Refer to Starting up the 2186 adjustment program (in the adjustment mode) in P. 37.
2. Click "PI-PR" of the adjustment menu.
   "Does it adjust?" appears.
3. Click "YES". Automatic adjustment starts.
4. The adjustment is completed when "OK" is displayed on the adjustment menu.

Adjustment of the frequency for camera shaking (FREQUENCY)

Required equipment

PC with preinstalled the 2186 adjustment program
USB-2 (USB cable)
AC Adapter AC-11

Procedure of the adjustment

1. Set camera to adjustment mode.
   Refer to Starting up the 2186 adjustment program (in the adjustment mode) in P. 37.
2. Click "FREQUENCY" of the adjustment menu.
   "Does it adjust?" appears.
3. Click "YES". Automatic adjustment starts.
4. The adjustment is completed when "OK" is displayed on the adjustment menu.

Adjustment of the servo for camera shaking (SERVO)

Required equipment

PC with preinstalled the 2186 adjustment program
USB-2 (USB cable)
AC Adapter AC-11

Procedure of the adjustment

1. Set camera to adjustment mode.
   Refer to Starting up the 2186 adjustment program (in the adjustment mode) in P. 37.
2. Click "SERVO" of the adjustment menu.
   "Does it adjust?" appears.
3. Click "YES". Automatic adjustment starts.
4. The adjustment is completed when "OK" is displayed on the adjustment menu.

Adjustment of the gyro for camera shaking (GYRO)

Required equipment

PC with preinstalled the 2186 adjustment program
USB-2 (USB cable)
AC Adapter AC-11

Procedure of the adjustment

1. Set camera to adjustment mode.
   Refer to Starting up the 2186 adjustment program (in the adjustment mode) in P. 37.
2. Click "GYRO" of the adjustment menu.
   "Does it adjust?" appears.
3. Click "YES". Automatic adjustment starts.
4. The adjustment is completed when "OK" is displayed on the adjustment menu.

Adjustment of CCD Vsub voltage (VSUB)

Memorize the number printed on the bar code put on the CCD ASSY, when CCD ASSY (2186-0271) or MAIN BOARD ASSY (2186-0410) is replaced.
If CCD ASSY (2186-0271) is exchanged for new one, exchange the bar code on the MAIN BOARD ASSY (2186-0410) for the bar code put on the new CCD ASSY.

Required equipment

PC with preinstalled the 2186 adjustment program
AC Adapter AC-11
USB-2 (USB cable)

Procedure of the adjustment

1. Set camera to adjustment mode.
   Refer to Starting up the 2186 adjustment program (in the adjustment mode) in P. 37.
2. Click "VSUB" of the adjustment menu.
   "Does it adjust?" appears.
3. Click "YES". "CCD V-sub Adjustment " windows is appeared. (Fig. 1)
4. Input ten digit memorized number on the CCD ASSY (Fig.2) and click OK
5. OK is displayed and adjustment is complete.

Fig. 1

Fig. 2

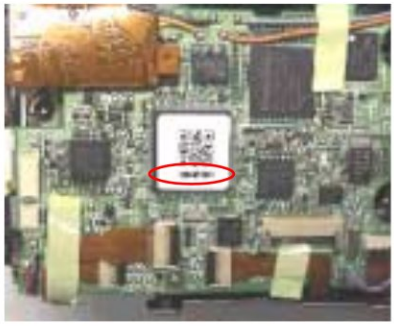

Setting for the adjustment of CCD AORI & CENTER

Required equipment

PC with preinstalled the 2186 adjustment program
Master body (Mass Production camera of 2186)
AE Master Lens
2181AORI-Chart
Hexangular wrench (1.5) or hexangular screwdriver
Fluorescent light stand SQ967W
Tripod
USB-2 (USB cable)
AC Adapter AC-11
Grip Ring

Setting the Master body and the chart

1. Setting all equipment according to the order listed below (Fig. 1).

> Caution: Use stable tripod. Please be careful to detach camera from AF Master Lens without changing any condition, like the position of tripod.
> If some changes happen, you can not peform correct adjustment.
> Luminance on the chart must be between Ev10.7 and Ev 11.3.

1) Set Grip Ring to the tripod and set Master Lens to Grip Ring.
2) Attach Master body to Master Lens.
3) Set Master body and chart. Distance between Master body and chart is 470mm.
4) Look into the finder of Master body.
5) Focusing to the chart by rotating the focus ring of Master Lens.
6) Align the center of foucus frame to the center of the chart.
7) Confirm whether cross line of the chart is located at the center of the screen or not by setting the camera to after view mode. If cross line is not located at the center of the screen, please perform setting, step 1 to step 6 again.

Position of CCD

Fig.1

Fig.3

Fig.2

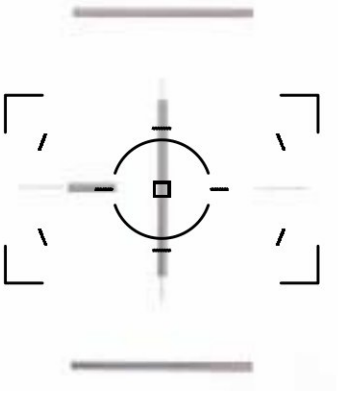

Align the hights of the center of the chart and the center of lens.

Adjustment / Checking of CCD AORI & CENTER

Outline

Peform adjustment of CCD position and perspective.

*See Setting the camera and the chart when adjusting the CCD AORI&CENTER (P. 40).

With 2186 adjustment program, master body for CCD Aori & Center is selectable from 2181 and 2186.

Preparation of the adjustment

*When CCD sensor module is out of position after replacing CCD MODULE ASSY, tighten three AORI adjusting screws until they stop, then evenly loosen them by 3 turns.

1. Perform this adjustment without BACKCOVER ASSY, after disassembling from step 1 to step 4 in P. 4.
2. Set Master body and chart.
   Refer to Setting of Master body and chart for the adjustment of CCD position in P. 40
3. Set camera to adjustment mode.
   Refer to Starting up the 2186 adjustment program (in the adjustment mode) in P. 37

Preparation of the adjustment when using 2181 as a master body instead of 2186

1. Set 2181 master body to adjustment mode, and start up the 2181 adjustment program.
2. Click AORI & CENTER of the adjustment menu, then click MASTER BODY "AORI & CENTER".
   Does it adjust? appears.Select 2186 adjustment program.
3. Setting Data of master body has complete! appears when data readout completed.
4. Click END in AORI & CENTER adjustment menu.
   Do not close the adjustment screen. Otherwise, the Master body data will be lost.
5. Select 2186 in the CAMERA CODE list and click START adjustment program.
6. Start from step 8 of the adjustment procedure.

Adjustment of CCD center position and AORI

1. Set 2186 master body to adjustment mode.
2. Click AORI & CENTER in adjustment menu.
3. Click 2186 when Please select master data appears. (P. 42 Fig. 1)
4. Click MASTER BODY AORI & CENTER in AORI & CENTER Adjustment menu. (Fig. 2)
5. Setting Data of master body has complete! is displayed, data readout completed.
6. Click CHECK AORI and check the data.
7. Click END in AORI & CENTER Adjustment menu.
8. Set target camera to adjustment mode.
9. Exchange Master camera for target camera.
   Be careful to exchange cameras to avoid any change to the setting.
10. Click AORI & CENTER in Adjustment menu.
11. Click the model which was selected as master body in Fig.1 P.42.
12. Click ADJUSTMENT CENTER When Does it adjust? is displayed, click YES .
13. OK is displayed when CENTER adjustment completed.
14. Click ADJUSTMENT AORI
15. Check the numbers displayed in Aori Adjusment window, whther value of C and dPI is in the range of standard value. (Fig. 3)

Standard value of C: Between -30 and 30
Standard value of dPI: Between -30 and 30

   If displayed value is out of range, peform the following adjustment.
   Turn AORI adjusting screws (2706) following the direction in Aori Adjustment window (Fig .4)
16. By clicking RETRY , repeat step 15 until displayed value is within the standard.
17. If the result is within the standard, click OK in AORI adjustment menu to complete.

Perform Resolving Power check according to the check list, P.4, after finishing adjustment. Repeat adjustment of CCD center position and AORI until the result of this check satisfies the standard.

Fig. 1

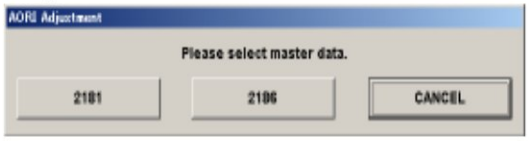

Fig. 2

Fig. 3

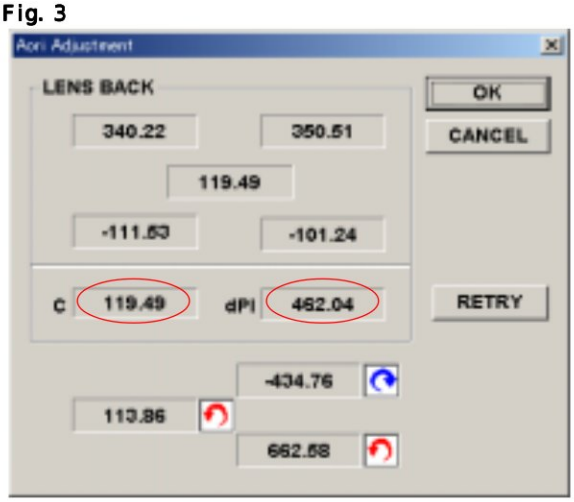

Fig. 4

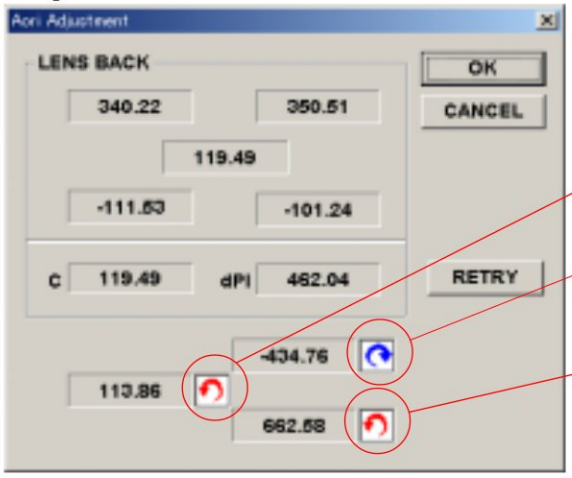

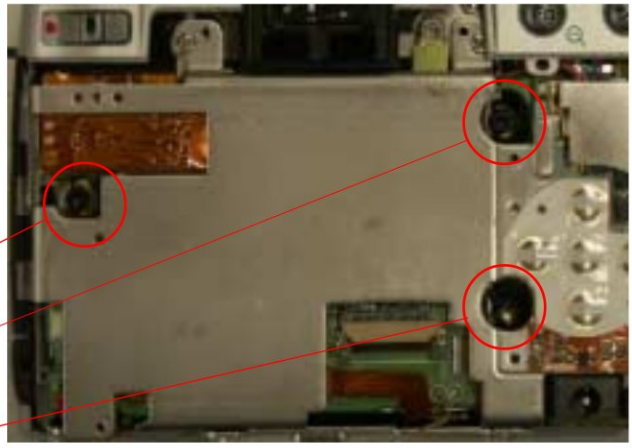

Numbers mean the degrees of rotating adjusting screw
Arrows mean the direction of rotating adjusting screw

REPAIR GUIDE

Procedure of CCD AORI checking

1. Set 2186 camera to adjustment mode.
   Refer to Starting up the 2181 adjustment program (in the adjustment mode) in P. 37.
2. Click AORI & CENTER in adjustment menu.
3. Click 2186 when Please select master data appears. (Fig. 1)
4. Click MASTER BODY AORI & CENTER in AORI & CENTER Adjustment menu(Fig. 2) and perform shutter-release.
5. Setting Data of master body has complete! appers when reading Master body data is completed.
6. Click END in AORI & CENTER Adjustment menu.
7. Click ADJUSTMENT END in adjustment menu.
8. Set target camera to adjustment mode. Exchange Master camera for target camera.
   Be careful to exchange camera to avoid any change to the setting.
9. Click AORI & CENTER in adjustment menu. Select the model specified as master body in Fig.1.
10. Click CHECK AORI in AORI & CENTER Adjustment menu. (Fig. 2)
11. Check the value disPlayed in Aori Adjusment window, whether value of C and dPI is within the following standard. (Fig. 3)

Standard value of C: From -10 to 10 Standard value of dPI: From -10 to 10

Manual Set SS & X-Sync. Time-lag Check

Equipment Required

Shutter Tester
AC Adapter AC-11
X Cable or X Cable , AEF SIGNAL ADPTER , BODY SIGNAL ADAPTER(with X contact)

Manual SS Check

1. Set up the equipment as in Fig. 1.
2. Release the shutter at each shutter speed, and check that reading meets the table-1 below.

X Sync. Time-Lag Check

1. Set up the equipments as in Fig. 1 or as in Fig.2.
2. Release the shutter and check that reading meets the table-2 below.

Fig.1

Fig.2

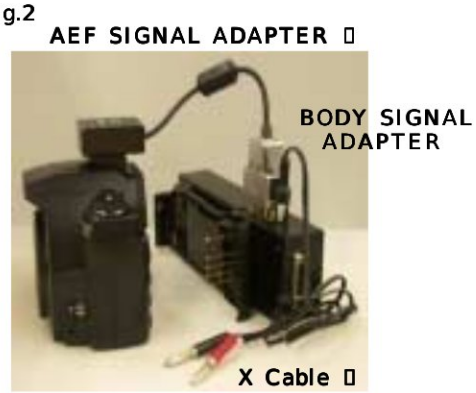

Table-1

SS	Period (ms)	Tolerance (ms)	Allowable range	Exposure variation
1/4000	0.244	0.156 - 0.383	With in 0.45EV	Difference between Max. and Min. value among range A, B, and C: within ±0.6EV Difference between range A & B, B & C: within ±0.3 E V
1/2000	0.488	0.333 - 0.714		
1/1000	0.977	0.793 - 1.202		
1/500	1.950	1.590 - 2.40		
1/250	3.910	3.17 - 4.81		
1/125	7.810	6.35 - 9.62		
1/60	15.60	12.7 - 19.2	With in 0.30EV	
1/30	31.30	29.2 - 33.5		
1/15	62.50	58.3 - 67.0		
1/8	125	117 - 134		
1/4	250	233 - 268		
1/2	500	467 - 539		

Table-2

Shutter speed	Item	Allowance
1/160(AS-OFF)	X-sync delay time	0.5 ms or longer
	From X ON to the 2nd curtain appearance	2.0 ms or longer
1/125(AS-ON)	X-sync delay time	0.9 ms or longer
	From X ON to the 2nd curtain appearance	2.0 ms or longer

Adjustment Manual Set SS

Equipment Required

PC with preinstalled the 2186 adjustment program
Shutter Tester
USB-2 (USB cable)
AC Adapter AC-11

Procedure of the adjustment

1. Set camera to adjustment mode.
   Refer to Starting up the 2186 adjustment program (in the adjustment mode) in P. 37.
   *Turn off the AS switch.
2. Click SS of the adjustment menu. Does it adjust? appears. Click YES.
3. Execute 1st release? appears. Click OK.
4. Repeat step 3 to perform shutter release three times, and then calculate an average of readings at B-Range (SS:1/4000).
5. Input SS average [s] in the window (Fig. 1).
6. If the input value is within the standard, OK appers and adjustment is completed.
   If the input value is out of standard, repeat from step 3.

Fig.1

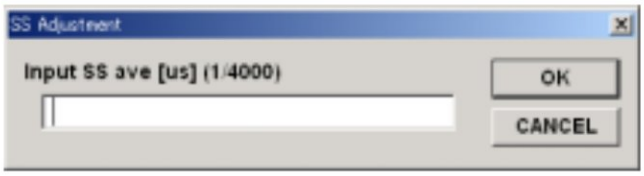

Standard Value: 0.265ms - 0.305ms

Fig.2

Shutter Tester
FUNC: EXP
CAMERA
Exposure mode: M
A S : OFF
S S : 1/4000
A S : OFF

Preparation before AF adjustment

Note: After replacing CCD MODULE ASSY and/or MIRROR BOX ASSY or its relative parts, always perform AF Area Adjustment (pg. 46) to EZ Adjustment (pg. 49).
If customer says focus fucntion is not normal, perform this adjustment too.

Preparations

The following items should have been completed before starting AF adjustment.

1. Peform this adjustment without FRONT COVER ASSY, after disassemble.
2. When CCD sensor module is out of position after replacing CCD MODULE ASSY, tighten three AF adjusting screws until they stop, then evenly loosen them by 0.4mm (1.14 turns).

Equipment Required

See the list on P.62 for the measuring instruments, tools and jigs.

PC with preinstalled the 2186 adjustment program
AF Master Lens
AE Master Lens
AF Chart I for 2163
AF Chart II for 2163
AF Chart III for 2163
USB-2 (USB cable)
AC Adapter AC-11
AF-Y/P Adjuster
AF Tripod Attachment-II
Grip Ring
Hexagon Bar Wrench (1.5) or Hexagon Screwdriver
Fluorescent (FL40S W-SDL) (EZ check and adjustment)
Flood Lamp (AF Area and Pitch Yaw adjustment)
(color temperature of 2800 degrees K and brightness higher than or equal to EV 10)

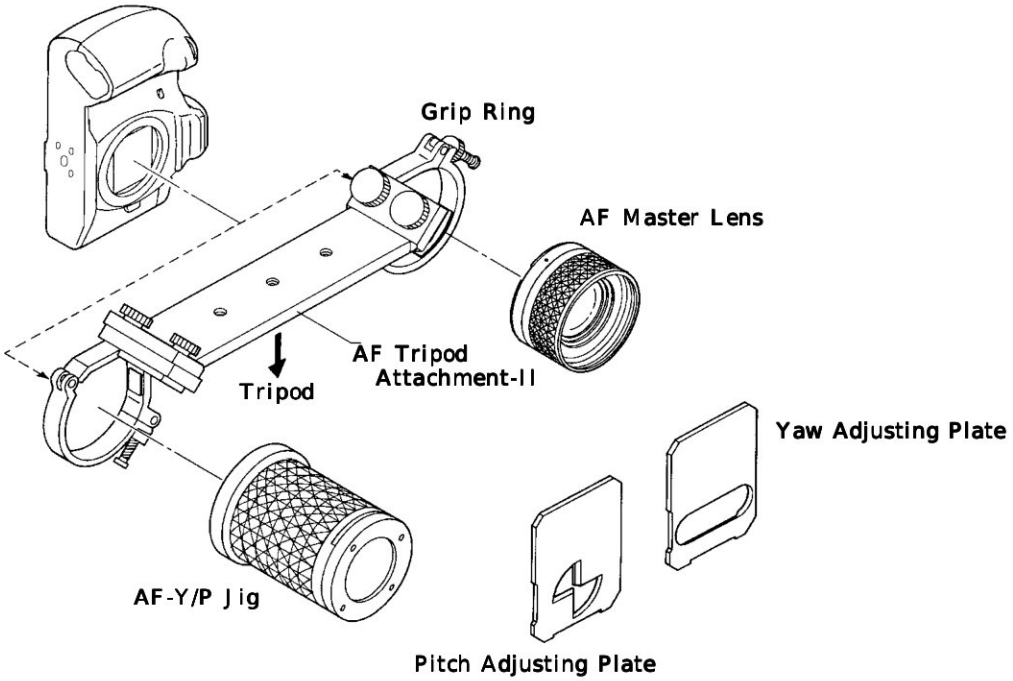

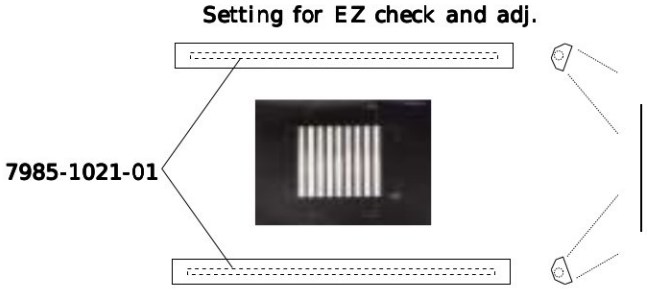

REPAIR GUIDE

AF Area Adjustment

Adjustment

1. Set up the equipment as in Fig. 1.
2. Set the camera to the adjsutment mode.
   Refer to Starting up the 2186 adjustment program (in the adjustment mode) in P. 37.
3. Click AF of the adjustment menu. Does it adjust? appears.
4. Click YES . Please select menu appears.
5. Click AREA and then click START Automatic adjustment starts and displays waveform and readings.
   Check that each line has two dents like the ones in Fig. 2, and the readings X0 and Y0 are within the standard. If Y0 reading is beyond the standard, follow the adjustment procedure below.
6. Adjust the sub-mirror position as in Fig. 3.
7. After completion of adjustment, click STOP and then END .

Standard X 0 : 0 0.35 mm (check only)
Y 0 : 0 0.2 mm

Fig. 1

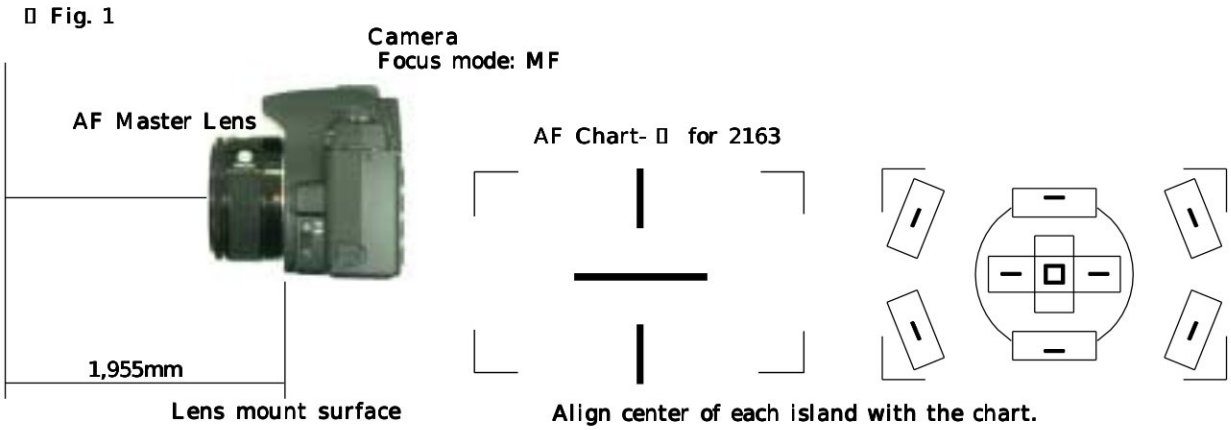

Fig. 2

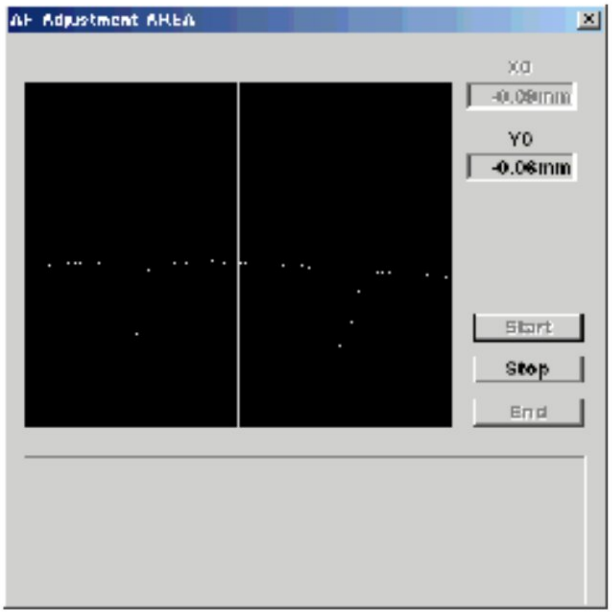

Fig. 3

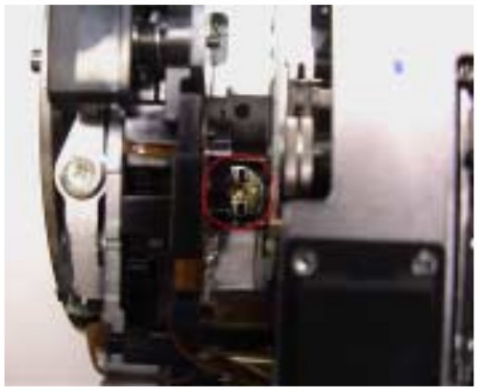

TORX L-Wrench

Pitch Yaw Adjustment

Turn a flood lamp toward camera during Pitch Yaw Adjustment.

Adjustment

Pitch Adjustment

1. Set camera to adjustment mode.
   Refer to Starting up the 2186 adjustment program (in the adjustment mode) in P. 37.
2. Attach AF-Y/P Adjuster to the camera, and set Pitch Adjusting Plate as in Fig. 1.
3. Click AF of the adjustment menu. Does it adjust? appears.
4. Click YES . Please select menu appears.
5. Click PITCH/YAW and then click PITCH . Automatic adjustment starts.
6. Adjust the Pitch Adjusting Screw (Fig. 4) so that the reading (Fig. 2) is within the standard.
   If not, follow the adjustment procedure below.
7. If the reading is within the standard, click STOP .

Yaw Adjustment

8. Attach AF-Y/P Adjuster to the camera, and set Yaw Adjusting Plate as in Fig. 3.
9. Click YAW Automatic adjustment starts.Adjust the Yaw Adjusting Screw as in Fig.4 so that reading is within the standard.
10. Adjust the Yaw Adjusting Screw (Fig. 4) so that the reading (Fig. 2) is within the standard.
11. If the reading is within the standard, click STOP . Perform PITCH adjustment again.
12. Check that the readings are within the standard by repeating PITCH and YAW adjustment.

Item	Standard
Pitch	0.77 - 1.30
Yaw	0.73 - 1.37

Fig. 1

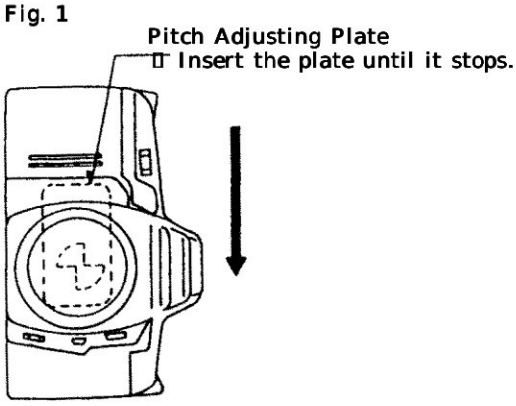

Fig. 2 (Pitch) (Yaw)

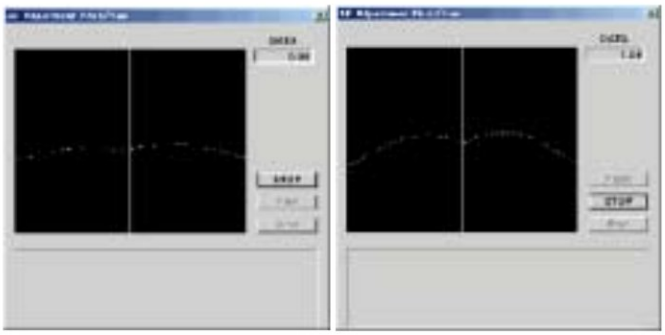

Fig. 3

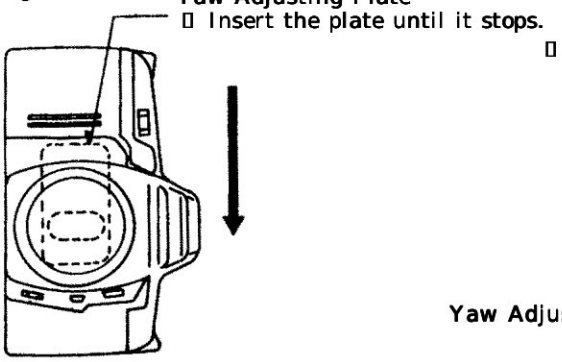

Fig.4

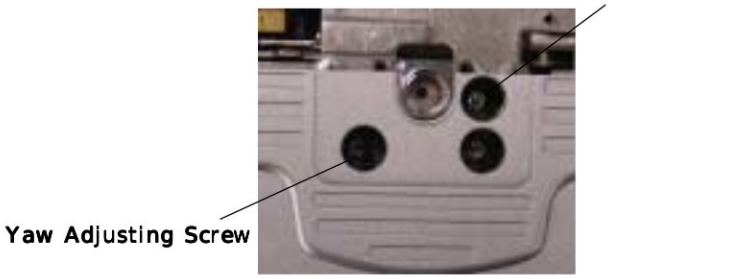

FLATNESS Adjustment

*Select the island and wave form after the flatness adjustment enables dust check.

Required equipment

Luminance box (L-2101/L-2111 or multi camera tester: EF-8301)
AE Master Lens
PC with preinstalled the 2186 adjustment program
USB-2 (USB cable)
AC Adapter AC-11

Procedure of the adjustment

1. Set camera to adjustment mode.
   Refer to Starting up the 2186 adjustment program (in the adjustment mode) in P. 37.
2. Set the camera and the measuring instrument as in Fig.1.
3. Set the brightness of the luminance box to EV 8.
4. Click FLATNESS of the adjustment menu. Does it adjust? appears.
5. Click YES and then click START . Automatic adjustment starts.
6. OK appears when adjustment is completed.(Fig. 2)

Fig.1

Fig.2

EZ Check / Adjustment

Preparation of the EZ Check / adjustment

Set up the camera , chart and lighting as in Fig.1 , Fig.2.

Fig.1 Setting for Body and Chart

Fig.2 Setting for EZ check and adj.

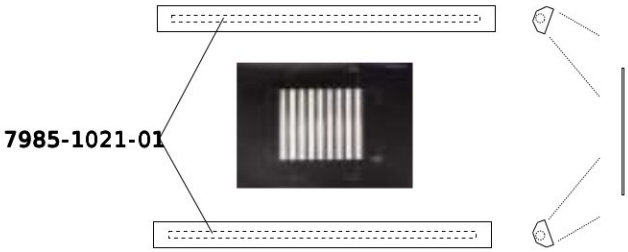

AF Chart- for 2163

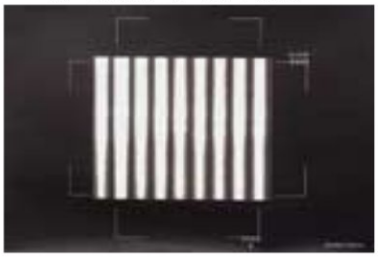

AF Chart- for 2163

REPAIR GUIDE

EZ Adjustment

Be sure to perform the adjustment for all island groups in series according to the display after replacing CCD MODULE ASSY.

Adjustment

1. Set up the equipment (refer to P. 48 Fig. 1 , Fig. 2).
2. Set the camera to the adjsutment mode. Refer to「Starting up the 2186 adjustment program (in the adjustment mode)」in P. 37.
3. Click「EZ」of the adjustment menu.「Please select menu」appears.
4. Click「ADJUST」.
5.「Does it adjust?」appears. Click「YES」.
   「Adjust <3, 4, 5 ISLAND> Please set chart position as <A>」appears. (Fig. 1)
6. Align the focus frame on the indicated position, and then click OK.
   Use the appropriate chart according to the desired island group. (See table below)
7. Repeat step 5.
8.「OK」appears in adjustment mode when completed.

Island group		Chart	Measuring point
3rd(3), 4th(4,5,6), 6th(8)	ISLAND	AF Chart-I for 2163 (Horizontal)	A - D
5th(7)	ISLAND	AF Chart-I for 2163 (Vertical)	E - H
1st(1), 7th(9)	ISLAND	AF Chart-II for 2163 (Horizontal)	I - L
2nd(2), 8th(10)	ISLAND	AF Chart-II for 2163 (Horizontal) *	M - P

When checking the reading at 2nd island group and 8th island group, use AF Chart-II for 2163 upside down.

「Fig.1

REPAIR GUIDE

EZ Check

Check

1. Set the camera to the adjsutment mode.
   Refer to Starting up the 2186 adjustment program (in the adjustment mode) in P. 37.
2. Click EZ of the adjustment menu. Please select menu appears.
3. Click CHECK . (Fig. 1, Fig. 2)
4. Please select island appears. Align the focus frame on the island to be checked.
   Use the appropriate chart according to the desired island group. (See table below)
5. Click the island to check. EZ value is displayed. (Fig. 2)
6. Check the value is within the standard, and click END .
   *If the reading is beyond the standard, perform EZ SHIFT . (p.51)

Island group	Chart	Measuring point
3rd, 4th, 6th ISLAND	AF Chart-I for 2163 (Horizontal)	A (A~D)
5th ISLAND	AF Chart-I for 2163 (Vertical)	E (E~H)
1st, 7th ISLAND	AF Chart-II for 2163 (Horizontal)	I (I~L)
2nd, 8th ISLAND	AF Chart-II for 2163 (Horizontal) *	M (M~P)

When checking the reading at 2nd island group and 8th island group, use AF Chart-II for 2163 upside down.

Standard: 0 +/-50

Fig.1

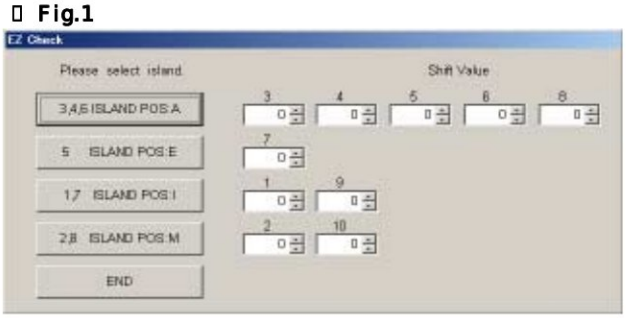

Fig.2

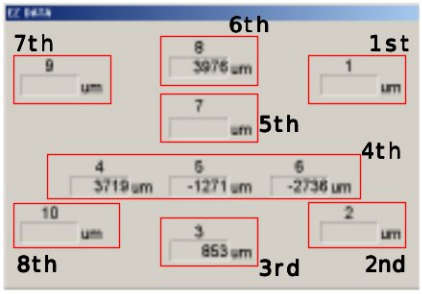

Set point of focus frame and Island No.

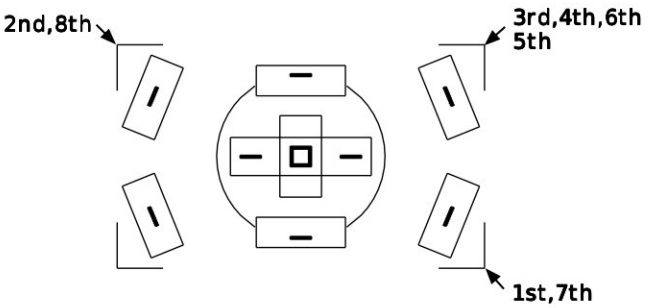

Island (Block) Group Layout

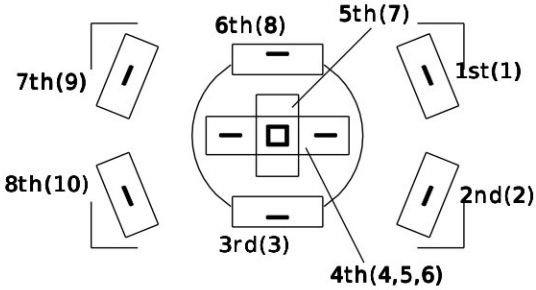

REPAIR GUIDE

EZ SHIFT

Decide the amount of shift by getting the average of 4 points of each island.

Island group		Chart	Measuring point
3rd(3), 4th(4,5,6), 6th(8)	ISLAND	AF Chart-I for 2163 (Horizontal)	A - D
5th(7)	ISLAND	AF Chart-I for 2163 (Vertical)	E - H
1st(1), 7th(9)	ISLAND	AF Chart-II for 2163 (Horizontal)	I - L
2nd(2), 8th(10)	ISLAND	AF Chart-II for 2163 (Horizontal) *	M - P

When checking the reading at 2nd island group and 8th island group, use AF Chart-II for 2163 upside down.

Procedure

1. In the SHIFT VALUE of EZ Check (Fig. 1), set the shift amount of a block number to be shifted by clicking up/down button of each block.
2. Select the island located at the left of the set block.
3. After shifting, perform focusing.

Fig.1

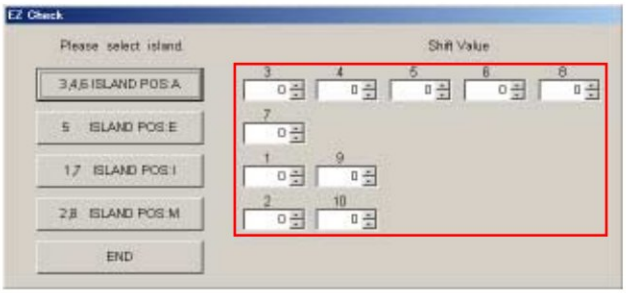

Fig.2

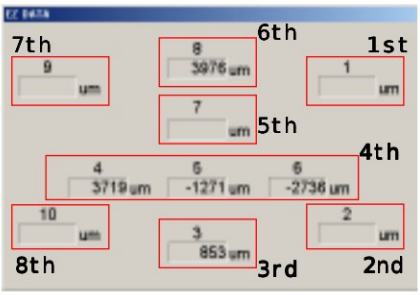

Set point of focus frame and Island No.

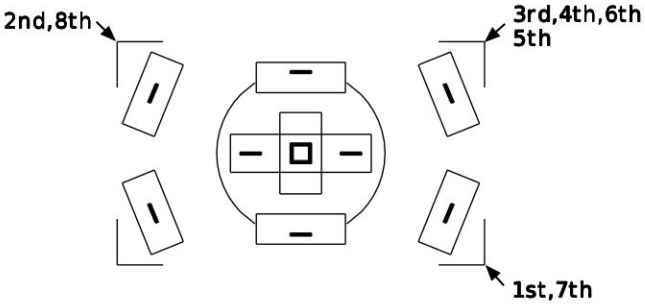

Island (Block) Group Layout

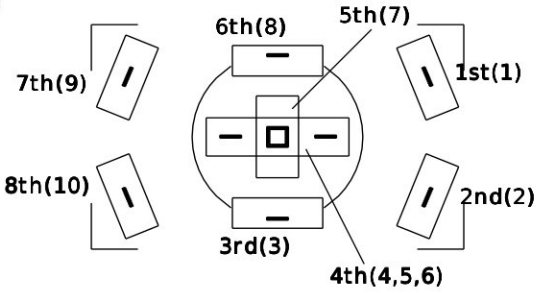

Aperture Preset Check / Adjustment

Equipment Required

PC with preinstalled the 2186 adjustment program
HIT I/O Tester
Preset Signal Adapter
USB-2 (USB cable)
AC Adapter AC-11

Check

1. Set up the equipment as in Fig. 1, and set camera to M mode and Bulb.
2. Press Reset Button on HIT I/O Tester so that 00 appears in the display.
3. Set aperture to f/11, and release the shutter.
   Check the reading in HIT I/O Tester is within the standard. (Reading appears while Shutter-release Button is pressed all-the-way down.)
   If the reading is out of standard, make Aperture Preset adjustment.

Standard f/11: Ab - bb

NOTE: These indications look similar in HIT I/O Tester display
6 -------- 6
b -------- b

Fig.1

HIT I/O Tester
PRE/FLA: PRESET

Camera
Exposure mode: M
Focus mode: MF

Preset Signal Adapter

Adjustment

1. Set up the camera and measuring instruments as shown in Fig. 1.
2. Set the camera to the adjsutment mode.
   Refer to Starting up the 2186 adjustment program (in the adjustment mode) in P. 37.
   Attach the Preset Sinal Adapter to the camera, and then set to the adjustment mode.
   Confirm that the aperture value is not indicated as -- on the LCD of the camera.
3. Press the Reset button of the H.I.T. I/O tester to reset the display to 00
4. Select PRETRIGGER in the adjustment menu.
5. When Execute 1st release? appears, click OK.
6. Shutter-releasing is automaticallly done. Check the value of the H.I.T. I/O tester.
7. Press the Reset button of the H.I.T. I/O tester to reset the indicated value to 00
8. When Execute 2nd release? appears, click OK.
9. The second shutter-releasing is automaticallly done. Check the value of the H.I.T. I/O tester.
10. Input the average value of 1st and 2nd shutter-releasing (Fig. 2), and then click OK
11. Repeat step 5 to 10 for f/5, f/10, f/20 respectively.
12. OK appears on the adjustment menu when completed.

Fig.2

REPAIR GUIDE

Check / Adjustment of the AE (AE)

Required equipment

Luminance box
L-2101/L-2111 or multi camera tester: EF-8301
AE Master Lens
PC with preinstalled the 2181 adjustment program
USB-2 (USB cable)
AC Adapter AC-11

Procedure of the Check

1. Set the camera to the adjsutment mode.
   Refer to Starting up the 2186 adjustment program (in the adjustment mode) in P. 37.
   Attach the AE Mater lens to the camera, and then set to the adjustment mode.
   Confirm that the aperture value is not indicated as -- on the LCD of the camera.
2. Click AE of the adjustment menu. Please select menu appears.
3. Click CHECK .
4. Set the value of brightness box by following the direction as Please set light box as EV** , and then click OK .
5. Measument value is displayed as shown in Fig. 1. Click OK .
6. Follow the direction and repeat step 4 and 5.
7. AE adjustment has completed! appears when completed.

Fig. 1

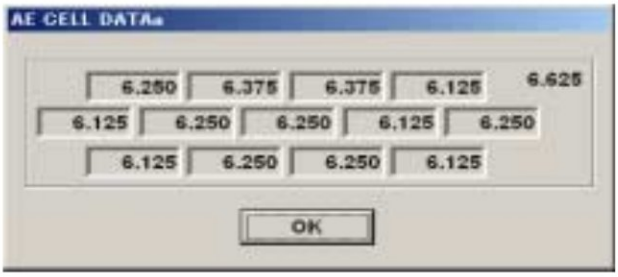

Procedure of the Adjustment

1. Set the camera to the adjsutment mode.
   Refer to Starting up the 2186 adjustment program (in the adjustment mode) in P. 37.
   Attach the AE Mater lens to the camera, and then set to the adjustment mode.
   Confirm that the aperture value is not indicated as -- on the LCD of the camera.
2. Click AE of the adjustment menu. Please select menu appears.
3. Click ADJUST . Does it adjust? appears.
4. Click YES . Please set light box as EV6 appears.
5. Set the value of Luminance box accordingly, and then click OK .
   Please set light box as EV15 appears.
6. Set the value of Luminance box accordingly, and then click OK .
7. Set the value of Luminance box by following the direction as Please set light box as EV** , and then click OK .
8. Measument value is displayed as shown in Fig. 1. Click OK . Fig. 1
9. Follow the direction and repeat step 7 and 8.
10. AE adjustment has completed! appears when completed.

REPAIR GUIDE

Sensitivity adjustment (CCD GAIN)

Required equipment

Luminance box
L-2101/L-2111 or multi camera tester: EF-8301
AE Master Lens
PC with preinstalled the 2186 adjustment program
USB-2 (USB cable)
AC Adapter AC-11

Procedure of the adjustment

1. Set camera to adjustment mode.
   Refer to Starting up the 2186 adjustment program (in the adjustment mode) in P. 37.
2. Set the camera and the measuring instrument as shown on the Fig. 1.
3. Set the brightness of the Luminance box to EV 7.
4. Click CCD GAIN of the adjustment menu. Does it adjust? appears.
5. Click YES then automatic adjustment starts.
6. The adjustment is completed when OK is displayed on the adjustment menu.

Fig. 1

Adjustment of the defective pixel (DEFECT PIXEL)

Required equipment

Luminance box
L-2101/L-2111 or multi camera tester: EF-8301
AE Master Lens
PC with preinstalled the 2186 adjustment program
USB-2 (USB cable)
AC Adapter AC-11

Procedure of the adjustment

1. Set camera to adjustment mode.
   Refer to Starting up the 2186 adjustment program (in the adjustment mode) in P.37.
2. Set the camera and the measuring instrument as shown on the Fig.1.
3. Set the brightness of the Luminance box to EV 8.
4. Click DEFECT PIXEL of the adjustment menu.
   Does it adjust? appears.
5. Click YES then automatic adjustment starts.
6. The adjustment is completed when OK is displayed on the adjustment menu.

Fig. 1

Adjustment of white balance (WB)

Required equipment

Light Source-A. Refer to Light source-A maintenance, P. 59.
Light balancing filter LB200
Master body (Mass Production camera of 2186)
AE Master Lens
PC with preinstalled the 2186 adjustment program
USB-2 (USB cable)
AC Adapter AC-11
White chart
Grip Ring

Procedure of the adjustment

1. Set Master body to adjustment mode.
   Refer to Starting up the 2186 adjustment program (in the adjustment mode) in P. 37.
2. Set the camera and the measuring instrument as shown on the Fig.1.
3. Click WB of the adjustment menu.
4. Click MASTER of WB adjustment menu.
5. Click OK after setting light source-A, according to the displayed information.
   The adjustment is automatically started.
6. Click OK after setting light source-C, according to the displayed information. (Fig. 2)
   The adjustment is automatically started.
7. OK is displayed on the adjustment menu, then reading data is complete.
8. Click ADJUSTMENT END
9. Exchange Master camera for target camera.
   Be careful to exchange camera to avoid any change to the setting.
10. Set camera to adjustment mode.
    Refer to Starting up the 2186 adjustment program (in the adjustment mode) in P. 37.
11. Click WB of the adjustment menu.
12. Click ADJUSTMENT of WB Adjustment menu.
13. Does it adjust? is displayed in the window, then click YES.
14. Click OK after setting light source-A, according to the displayed information.
    The adjustment is automatically started.
15. Click OK after setting light source C, according to the displayed information. (Fig. 2)
    The adjustment is automatically started.
16. The adjustment is completed when OK is displayed on the adjustment menu.

Fig. 1

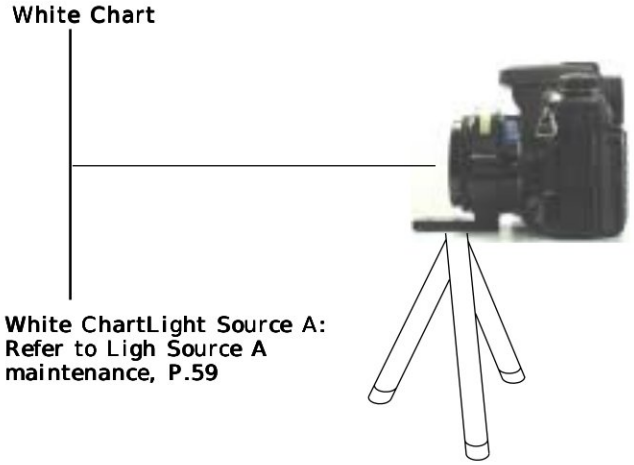

Fig. 2

REPAIR GUIDE

Adjustment of the camera shaking compensation (SHAKE GAIN)

Required equipment

Vibration tester
Shake Offset Chart 2
PC with preinstalled the 2186 adjustment program
USB-2 (USB cable)
AC Adapter AC-11
Master Lens for SHAKE

Preparation of the adjustment

1. Set the camera without USB cable and the measuring instrument as shown on the Fig. 1.
   Set distance between camera and Shake Offset Chart 2 to 1600mm.
   Note 1: Distance between camera and chart means distance between CCD position of the camera and chart. About CCD position, refer to P. 40 Fig. 3.
   Note 2: Use indirect lighting like room light for the lighting of the chart, not to use other direct light ing. If direct lighting is used, adjustment error often happens because of the mis-detecting of the cross line of the chart.
2. Set the center of the camera finder to the center of the chart.
3. Confirm whether the center of the chart is located at the center of the screen or not by setting the camera to after view mode. If the center of the chart is not located at the center of the screen, please perform setting again.

Procedure of the adjustment

1. Set camera to adjustment mode.
   Refer to Starting up the 2186 adjustment program (in the adjustment mode) in P. 37.
   Attach the Mater lens for SHAKE to the camera, and then set to the adjustment mode.
   Confirm that the aperture value is not indicated as -- on the LCD of the camera.
2. Click SHAKE GAIN of the adjustment menu. Does it adjust? appears.
3. Click YES then take a picture in the automatic mode.
4. Follow the message, Please turn on shake! Turn the power of the vibration tester on, and click OK after setting the rotation as follows (Fig.1). 8 or 4 pictures are automatically taken.
   Frequency of 60 Hz: 300+/-5 r/min
   Frequency of 50 Hz: 250+/-5 r/min
5. Follow the message, Please turn off shake! Turn the power of the vibration tester off, and click OK .
6. The adjustment is completed when OK is displayed on the adjustment menu.

Fig. 1

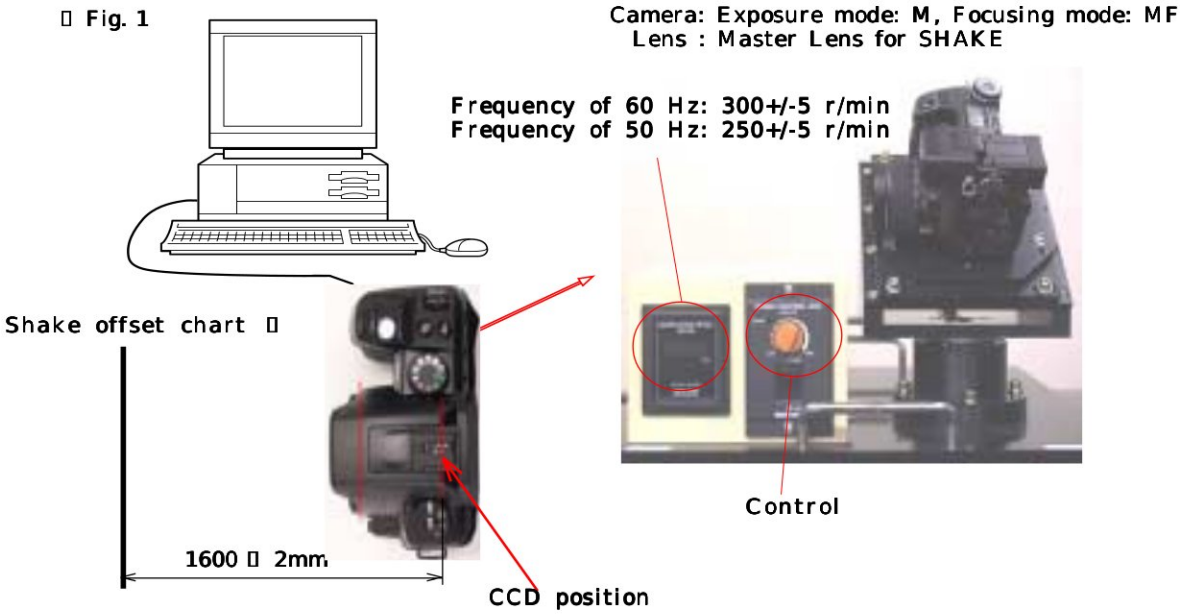

REPAIR GUIDE

FLASH LEVEL SHIFT

This adjustment is to shift the flash level optionally.

Equipment Required

PC with preinstalled the 2186 adjustment program
USB-2 (USB cable)
AC Adapter AC-11

Procedure

1. Set the camera to the adjsutment mode.
   Refer to Starting up the 2186 adjustment program (in the adjustment mode) in P. 37.
2. Click FLASH LEVEL in the adjustment menu. Does it adjust? appears.
3. Click YES . Please input Type and Shift appears. (Fig. 1)
4. Select the flash type by clicking the down button of the FLASH TYPE .
   *Select other for the flashes not listed.
5. Select the amount of shift by clicking the up button of the SHIFT LEVEL .
6. Click SET button. The destination setup has completed appears when completed.
   *After shifting the flash level, check the flash level.

Fig.1

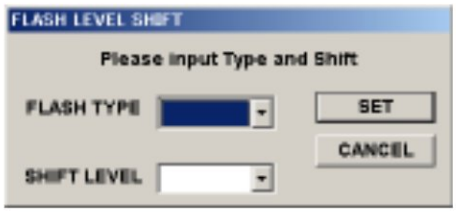

REPAIR GUIDE

Setting of Destination (DESTINATION)

How to check the destination
Press MENU button,and then press display button.

Required equipment

PC with preinstalled the 2186 adjustment program
USB-2 (USB cable)
AC Adapter AC-11

Procedure

1. Set camera to adjustment mode.
   Refer to Starting up the 2186 adjustment program (in the adjustment mode) in P. 37.
2. Click down downward arrow of the DESTINATION in adjustment menu and select required destination from the item list.
   Destination: Europe/Japan/USA/China

CAMERA LOG

Equipment Required

PC with preinstalled the 2186 adjustment program
USB-2 (USB cable)
AC Adapter AC-11

Procedure

1. Set the camera to the adjsutment mode.
   Refer to Starting up the 2186 adjustment program (in the adjustment mode) in P. 37.
2. Click CAMERA LOG in the adjustment menu.
   The following items can be read out and cleared.
   SHOOT (number of shutter-release)
   FLASH (number of flash firing)
   ERROR CODE (Error code is the last two digit)
   *Error code occurred during camera operation can be displayed in the viewfinder by pressing WB, S1, and the lens lock button concurrently.

Fig.1

LCD All Segment On

LCD displays check

Slide the main switch to the on position, and then insert the battery while pressing and holding the menu button, delete button, and left key of the controller concurrently.
(To cancel, remove the battery and then insert it again.)
*LCD monitor backlight and viewfinder turn on. AF area is illuminated sequentially.

REPAIR GUIDE

Light Source-A Maintenance

OutLine

Because high accuracy of required light source-A is required when adjusting and confirming.

Measuring instrument

Chroma meter (CL-200)
Liminance meter (LS-100)
Light source-A (tungsten light)

Procedure

*Managements of the chromaticity and the luminance

1. Light the light source-A on.
2. Measure the chromaticity coodinate (x,y) with the chroma meter. (Fig. 1)

Fig.1

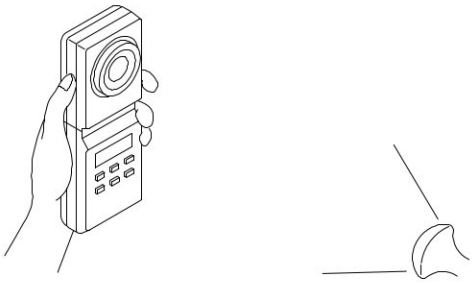

3. The result should be within the range of the following table.
   * If the result is out of the range, adjust the light voltage of the light source-A through the slidax.

[illegible]	x= [illegible]
	y= [illegible]

4. Measure the luminance with the luminance meter.
5. The result should be within the range of the following table.
   *If the result is out of the range, adjust the distance of the light source-A.

[illegible] m² [illegible]

REPAIR GUIDE

Error code on adjustment program

Error Code List of PC Adjustment program

Discription about adjustment NG Code

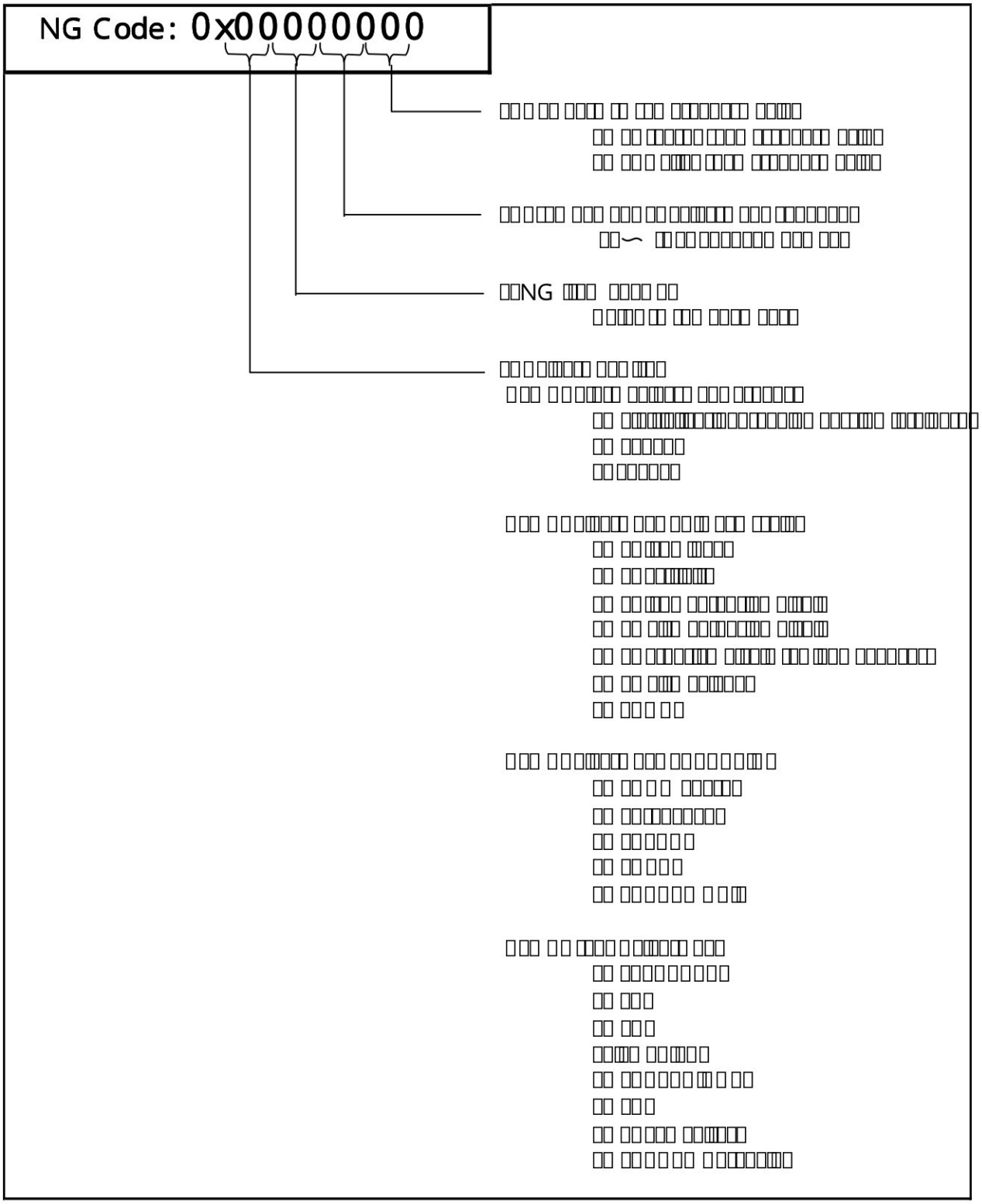

Measuring instrument

PC (AT convertible) with preinstalled Windows 98, 98SE, 2000 or XP. (USB port should be guaranteed its performance by the maker. Also, Adobe Photoshop 6.0 or later should be installed if Windows 2000 or XP is installed on PC.)
* It is possible to confirm the performance on PC with Windows 95 (AT convertible).
(Card reader and PC card adapter are required.)
640 x 480 or more color display capable of displaying at least 32,000 colors
Adobe Photoshop
USB Cable For USB-2
Luminance box L-2101 / 2111 / Multi camera tester EF-8301
DSC Shutter Tester Model 7FR-80D <7981-1029-01>
Luminance meter (LS-100)
Chroma meter (CL-200)
DC power supplies PR18-5A
Digital storage scope DS-8706
Digital multi meter <FLUKE 83>
Camera leak tester <CL-1101 ,CL-1201>
Macbeth color checker <2755-0008-75>
2766 resolving power chart (W) <2766-0005-75>
Color calculator II <2766-0008-75>
2186 adjustment program CD (Ver. 1.0) <2186-0001-75>
Fluorescent light stand SQ 967W <7981-9012-61>
Fuluorescent light FPL 27EX-N <7985-1020-01>
Vibration tester <7981-9013-01>
Master Lens for SHAKING <2181-0004-75>
Shake Offset Chart <2181-0006-75>
Hexangular screwdriver <7983-1040-01>
White chart
Light balancing filter LB200 <2720-0002-75>
Light source A: Tungsten light 150W type.
Light source C: (Light source A +light balancing filter LB200 <2720-0002-75>)
Blackout curtain
AC adapter AC-11
Tripod
HIT I/O Tester <7981-5001-03>
Preset Signal Adapter <7981-2014-62>
AF Chart- for 2163 <2163-0001-75>
AF Chart- for 2163 <2163-0002-75>
AF Chart- for 2163 <2163-0003-75>
AE Master Lens <2072-0001-76>
AF Master Lens <2072-0006-76>
AF Y/P Adjuster <2076-0006-75>
Remote Cord
Grip Ring <7983-9004-12>
Magnifier V
X Cable <7981-2014-16>/ X Cable <7981-2018-01>
AORI Chart for 2181 <2181-0003-75>

2186 adjustment program CD (Ver. 1.0)
<2186-0001-75>

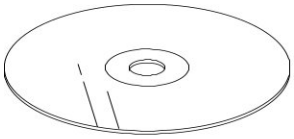

Subsidiary Materials

Grease
G-85 <7984-1085-02>
G-115 <7984-1115-03>

Adhesive
B-20 <7984-2020-01>
B-50 <7984-2050-01>
B-110 <7984-2110-01>

REPAIR GUIDE

TROUBLESHOOTING CHART

This section consists of the following items.

CONTENTS page

Precautions

(1)To check voltage, use digital Multimeter or an apparatus which input impedance of 10M or greater.
(2)To check conductivity, use a circuit tester of 3V or less.
(3)Check mainly soldering at lead wires or electrical elements and switch operation, since elements (IC, diode, transistor, resistor, or condenser) seldom cause the trouble.
(4)When checking, do not push elements or pull lead wires strongly.
(5)When checking voltage at patterns where switch operates, be careful not to prevent switch operation or to scratch patterns.
(6)Before removing electrical parts, be sure to disconnect Power Supply.
(7)Since this model uses lead-free solder, a soldering iron tip temperature of 280 - 350 C is sufficient.
But when it cannot melt solder, use a higher temperature for a short period of time.
Be sure to control soldering iron tips used for lead-free solder and those for leaded solder so they are managed separately.
This is because mixing lead-free solder and leaded solder will cause detachment phenomenon.
(8)When handling ICs avoid static electricity.

■ Caution for Battery and Circuit board disposal

Always follow local regulations for disposal.
Tape over the lithium-ion battery contacts to avoid short-circuiting during disposal.

■ Caution for Product disposal

Do not dispose of this product together with your household waste.
Please refer to the information of your local community or contact our dealers regarding the proper handling of end-of-life electric and electronic equipment.
Recycling of this product will help to conserve natural resources and prevent potential negative consequences for the environment and human health caused by inappropriate waste handling.

Trouble code

(1)Check

Equipment required

PC with 2186 adjustment program installed
USB-2 (USB cable)
AC-11

Procedure

1. Set camera to adjustment mode.
   Refer to Starting up the 2186 adjustment program (in the adjustment mode) in pg. 37 of Repair guide.
2. Click CAMERA LOG of the adjustment menu. (Fig. 1)
   Check the items in the CAMERA LOG dialog. (Fig. 2)

Fig. 1

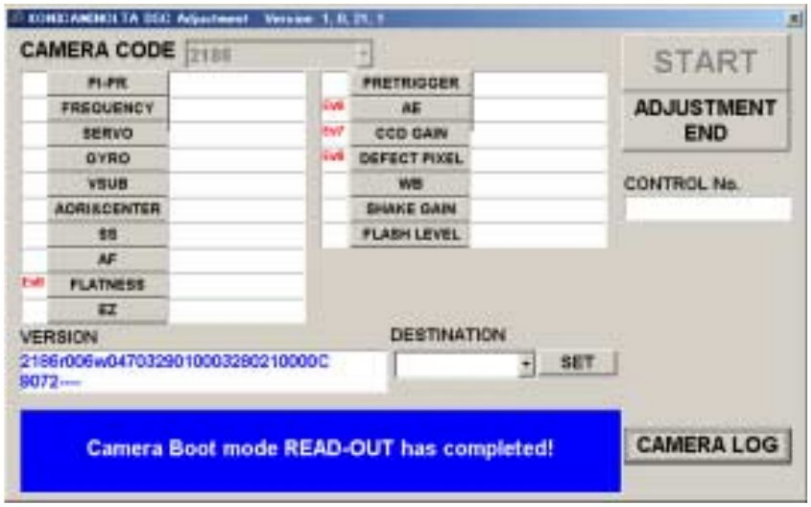

Fig. 2

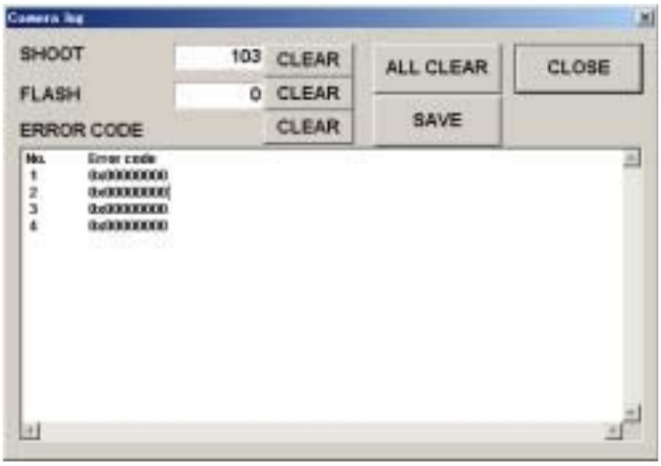

ERROR CODE:	Refer to the error code list (listed in hex).
SHOOT:	number of shutter-release for still images
FLASH:	number of flash burst
SHOOT CLEAR:	CLEAR THE SHUTTER-RELEASE LOG.
FLASH CLEAR:	CLEAR THE FLASH BURST LOG.
ERROR CODE CLEAR:	CLEAR THE ERROR CODE LOG.
ALL CLEAR:	CLEAR THE LOG OF ERROR CODE, NUMBER OF RELEASE, AND NUMBER OF FLASH BURST.

(2)Trouble Code List

code	Condition	Major Cause	Camera Operation
50	SCAM2 never become OFF within 150ms after charge motor driving on mirror up.	Charging mechanism NG.	After all motors brake for 50ms, system down.
52	FP pulse number is short more than 32 pulse after aperture stabilized.	Aperture mechanism NG.	
53	SCAM1 never become ON within 2s after charge motor driving on charging.	Charging mechanism NG.	
54	SCAM2 never become ON within 2s after charge motor driving on charging.	Charging mechanism NG.	
56	XON already ON at the beginning of release (before mirror	Shutter undercharge	
57	XON already ON just before sutter release.	Shutter undercharge	
58	XON never become ON between 1st curtain release and 2nd curtain running complete.	Shutter undercharge XON sw contact NG.	
59	XON become OFF when just before charging. (after about 18ms from 2nd curtain running)	1st curtain rebound. XON sw contact NG.	
5A	FP-pulse never stop within 2s after aperture open drive	Aperture mechanism NG.	
5B	In aperture driving , FP pulse cannot reach a target pulse within 130ms.	Aperture mechanism NG. Aperture PI NG.	
60	SCAM2 already OFF before mirror up driving start.	Charge overrun in last	
61	SCAM2 become OFF after final brake finished (motor off) on charging.	Charge overrun.	
B0	AF/MF cannot change within 2s after AFM motor driving start.	AF/MF PR NG. AF/MF changeover mechanism NG.	
01	ADT never output within 80 s on CCD 2nd initialization. (Normaly, it comes within about 13 s)	AF-CCD NG. AF-FPC connection NG.	
02	Output of AE-IC (LMOUT) cannot become 2.3V - 2.6V. (when battery on)	AE-IC NG. AE-FPC connection NG.	
03	IO/IC standard voltage (1.55V) is out of range on FP gain adjustment.	IC304 NG.	
05	FP1 amplitude cannot reach the limit on FP gain adjustment.	Aperture PI NG. Aperture PI-FPC connection	
06	FP2 amplitude cannot reach the limit on FP gain adjustment.	Aperture PI NG. Aperture PI-FPC connection	
07	AFMPR amplitude cannot reach the limit on AFM gain adjustment.	AF/MF PR NG. AF/MF PR-FPC connection	

Trouble Code List

code	Condition	Major Cause	Camera Operation
30	Bilt-in flash charging error. (charging cannot finish within 30s)	Fuse has blown. Flash charging circuit has damaged. IGBT NG.	After all motors brake for 50ms, system down.
31	Built-in Flash cannot fire.	Fuse has blown. Flash charging circuit has damaged. IGBT NG.	□
32	Bilt-in flash charging error. (voltage cannot reach 50V within 5s)	Fuse has blown. Flash charging circuit has damaged. IGBT NG.	□
33	Bilt-in flash charging error. (2.75s later from once reach 290V, the voltage dropped below 290V again)	Fuse has blown. Flash charging circuit has damaged. IGBT NG.	□
A0	Unexpected Err on digital section (ASIC).	Software probrem.	□
A1	Cannot receive reply from TEBURE IC.	TEBURE IC NG. TEBURE IC connection NG.	□

■Map of Electrical Elements / 素子配置図

(1)I/O FPC ASSY(#0406)/I/Oフレキセット(#0406)

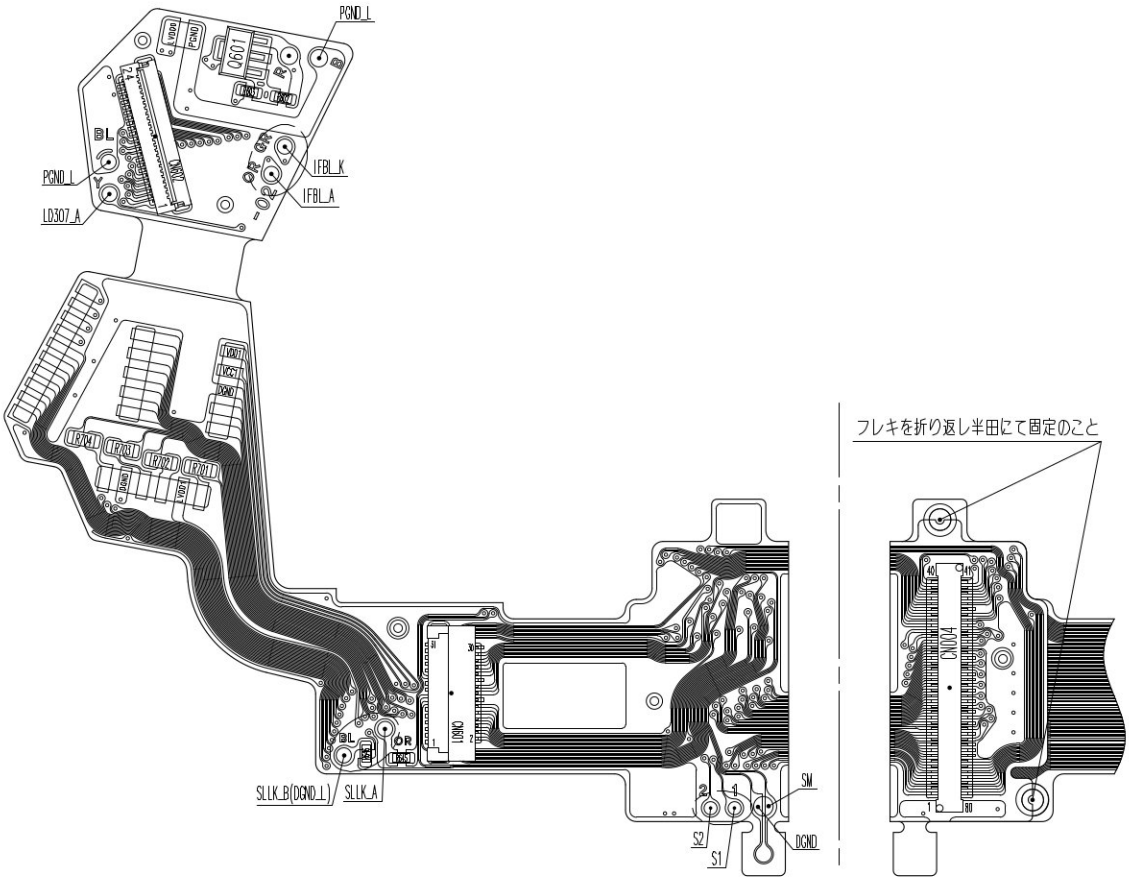

(2)FLASH PCB ASSY(#0473)/フラッシュ基板セット(#0473)

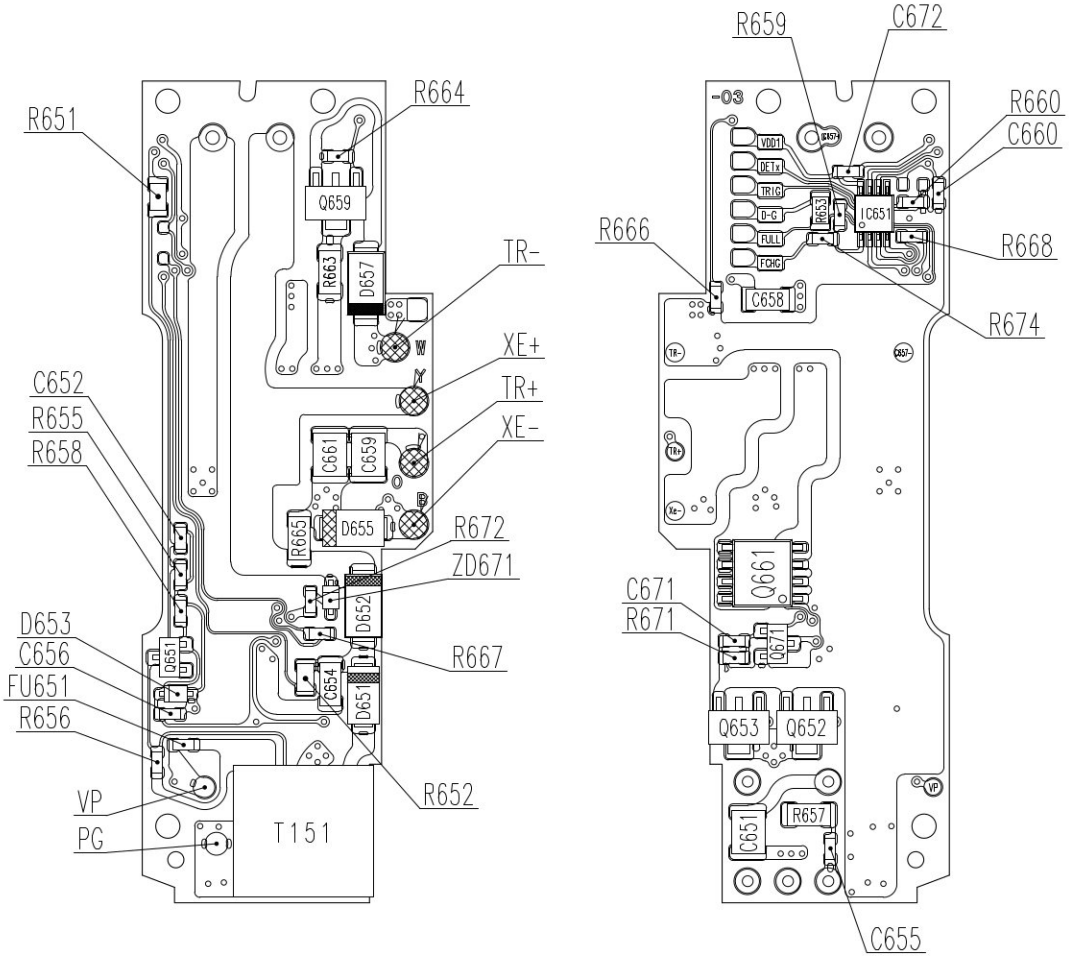

TROUBLE-SHOOTING CHART

(3)TOP COVER FPC ASSY(#0407)/上カバーフレキセット(#0407)

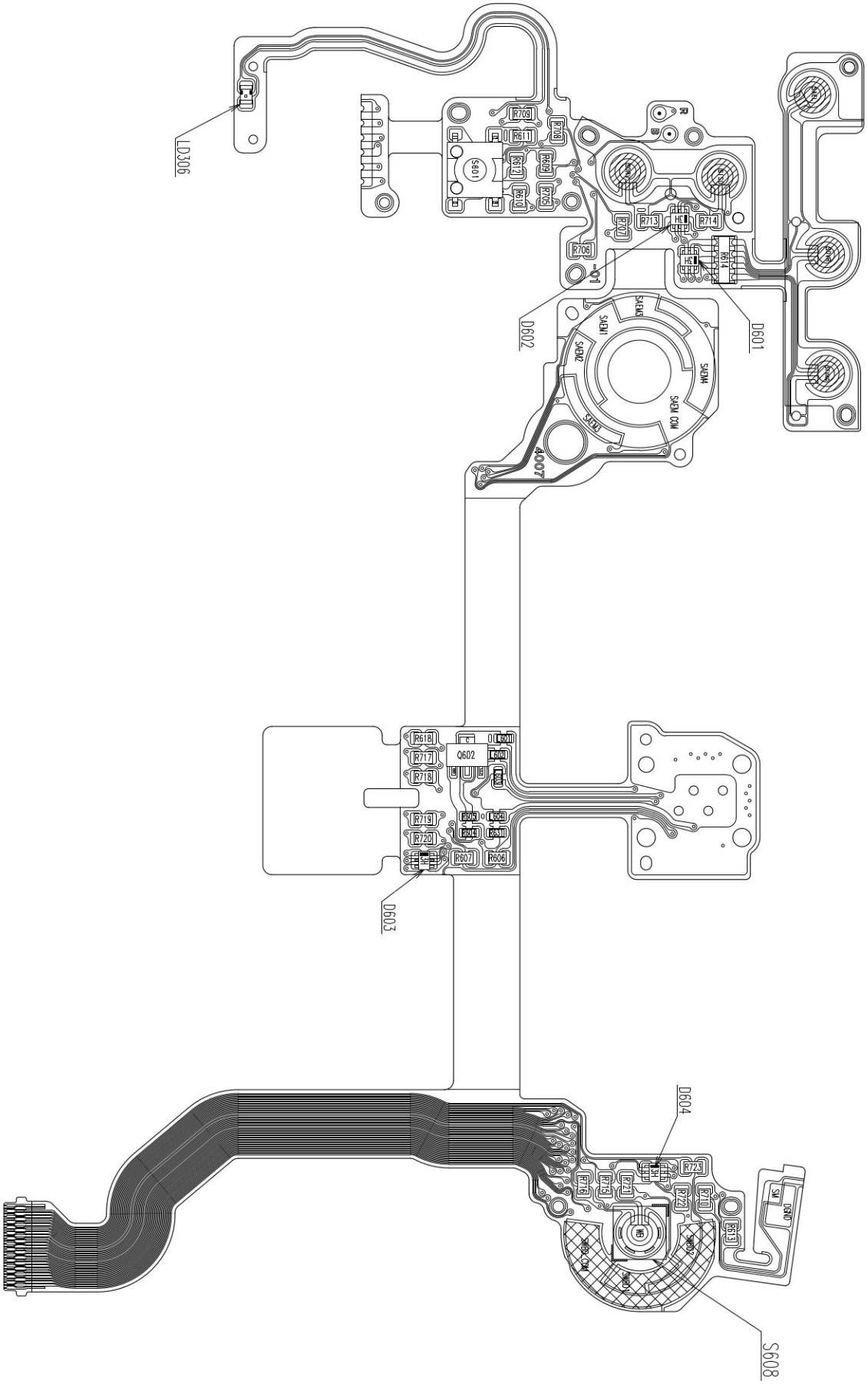

TROUBLE-SHOOTING CHART

(4) SW FPC-1 ASSY (#0408) / SWフレキ1セット (#0408)

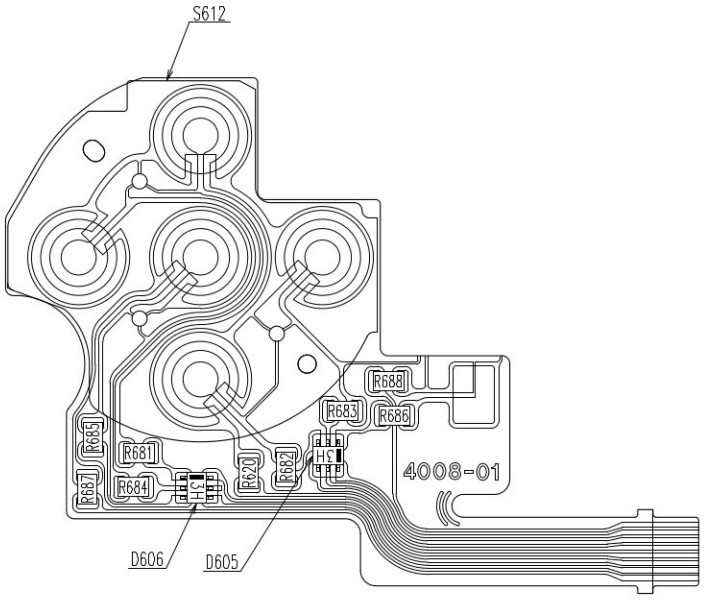

(5) SW FPC-2 ASSY (#0420)
(5) SWフレキ2セット (#0420)

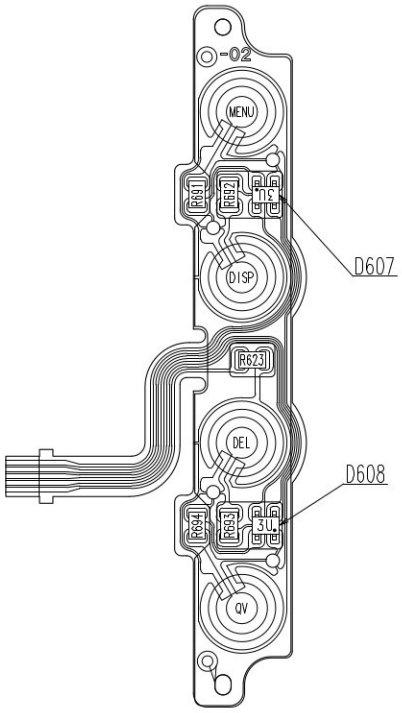

(6) GYRO FPC ASSY (#0414) / ジャイロフレキセット (#0414)

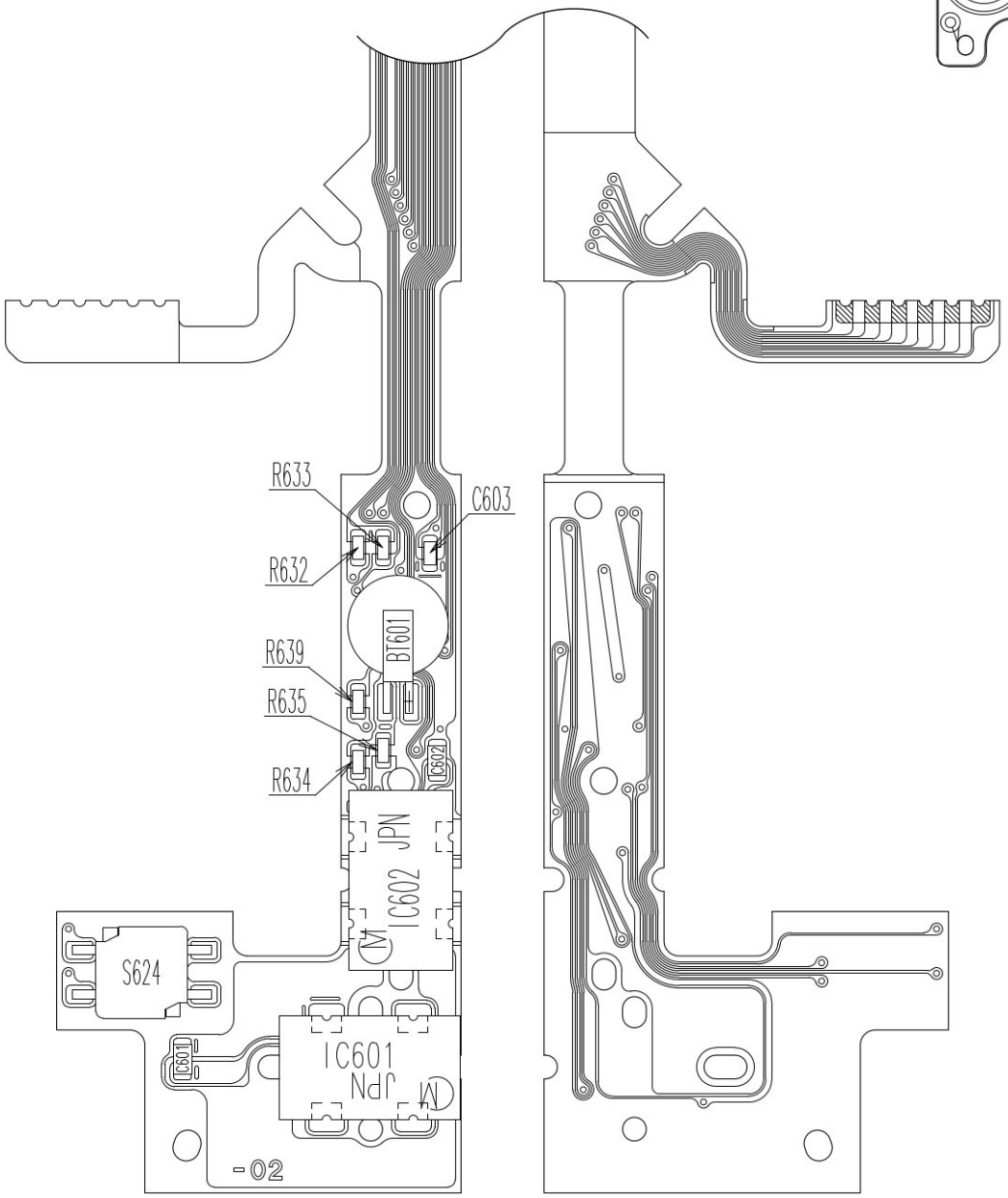

TROUBLE-SHOOTING CHART

(7)AF CHARGE ASSY(#0521)/AFチャージ台板セット(#0521)

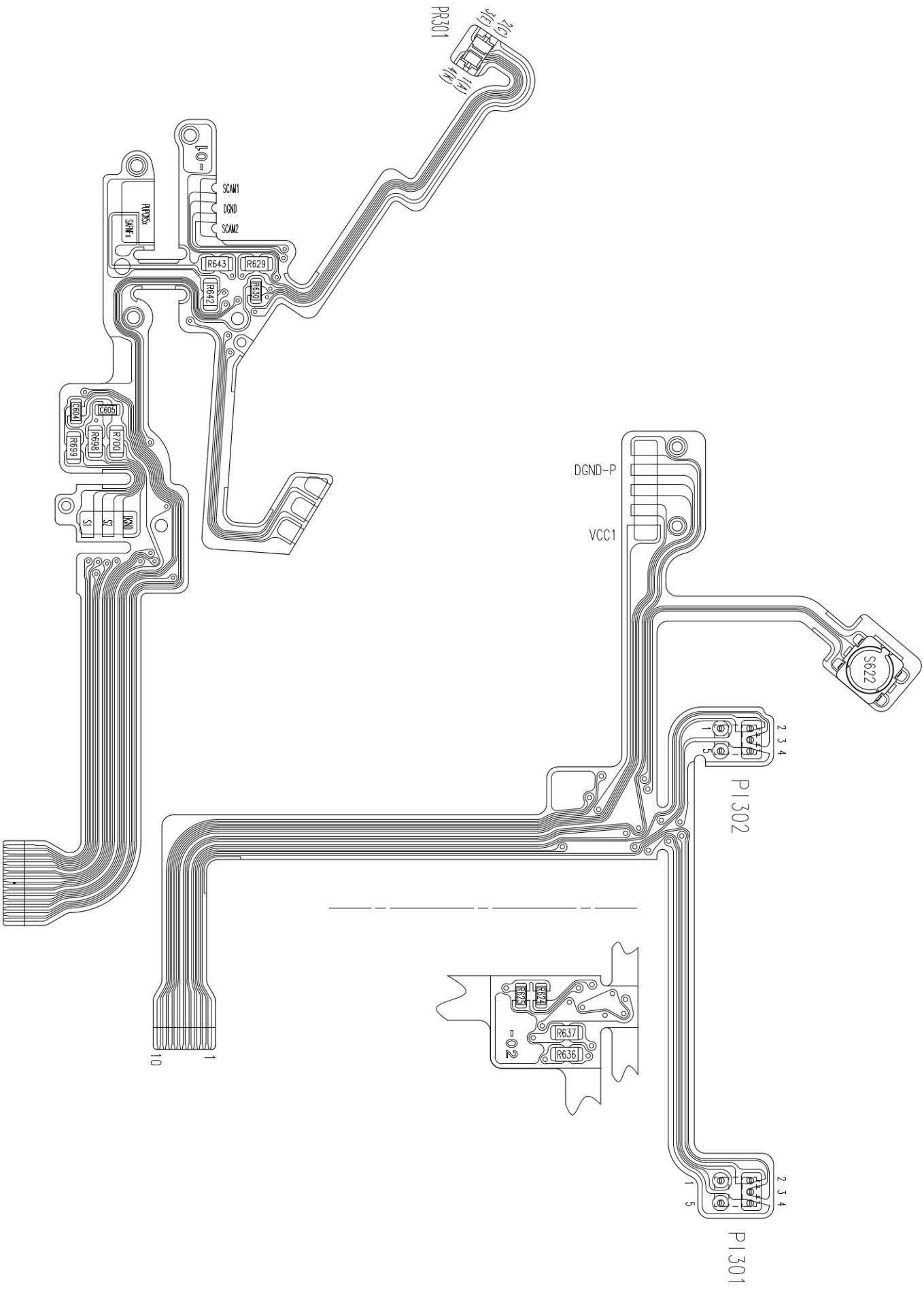

TROUBLE-SHOOTING CHART

(8)DC JACK PCB ASSY(#0427)
(8)DCジャック基板セット(#0427)

(9)SLIDER ASSY(#0901)
(9)スライダーセット(#0901)

(10)PENTA ASSY(#0580)
(10)ペンタセット(#0580)

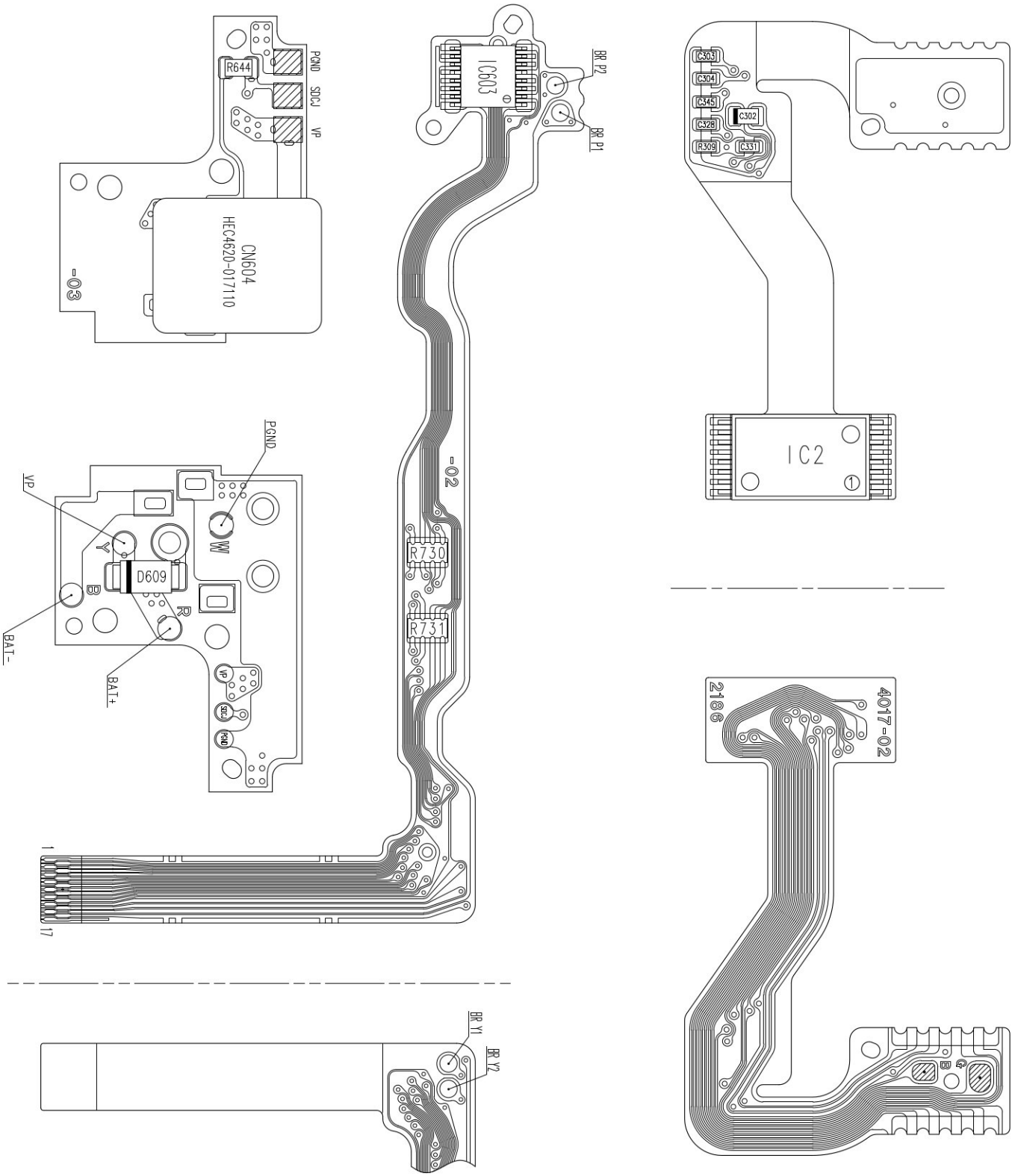

TROUBLE-SHOOTING CHART

Check List

1. This Check List describes the quality of operation warranted to general users. When users inquire about quality or request inspection, refer to this Check List. Use this list also when checking operation after repair.
2. When using this list during shipping or receiving inspection, judge the quality according to the purpose of the inspection, not by directly referring to this level.
3. For individual taste or special usage, some users may not be satisfied with this level of quality and will request a different one. In such cases, adjust the level as requested by them as much as possible.
4. Checking items which are characterized as sensory test are not included. Adjust these items according to product or user s request.

CONTENTS **PAGE**

Condition of Measure and Appreciation

Basically maesure and appreciation at the blow condition. But it is allowed to use another condition as long as not to influence the examination results.
(The concrete settings refer to the opelation manuals of the PC or monitor.)

1. Settings of Screen Area and Colors (System settings of PC)

		Macintosh	Windows
Screen Area	17 inch type monitor	1024x768 pixels	1024x768 pixels
	20 inch type monitor	1152x870 pixels	1152x864 pixels
Colors		16.7 million colors	True Color (24-bit) or True Color (32-bit)

Mac: Control panel Monitor & sounds Monitor Contrast of colors and Resolution.
Win: Conrtol panel display property of display detail of display Color palette and Field of desktop.

2. Settings of monitor size

Adjust size and position of monitor adjustment menu as the center glay scale width of monitor calibration image.
(Moni1.PSD: file from the 2186 Adjustment Program CD) is about 80mm at 100% display.
After above adjustment, the length of a diagonal line of the monitor s display erea is below.

17 inch type monitor:	About 393mm
20 inch type monitor:	About 462mm

3. Gamma Settings (Mac system set up)

Control panel- Color settings of Monitor Set Color Sync. Profiles of the monitor you use.

4. Settings of monitor color temparature, brightness, contrast

Color temparature of the monitor: 6500K
At monitor calibration image (Moni1.PSD: file from the 2186 Adjustment Program CD), adjust brightness and contrast as the difference between 0 and 5, 255 and 250 of RGB are recognized slightly and the difference between 0 and 10, 255 and 245 of RGB are recognized distinctly.

5. Surroundings

Perpendicular illuminance to the monitor surface is less than 200lux.
There is no reflects such as flourescent on the monitor surface.

Settings of Photoshop

1. Photoshop ver for measurement and appriciation

Photoshop ver for measurement and appriciation are from ver.4 to ver.7.
When use newer versions than Photoshop 5, set up color setting as 2.
(For Photoshop4, no need to set up especially.)

2. Color setting of newer versions than Photoshop 5

For Photoshop5, Default Color Setting is sRGB This setting convert RGB data when open images.
So you must set up below setting. (This is unrelated for Phtoshop4.)

Macintosh:	RGB	Custom
	Gamma	1.8
	White point	Custom (Custom value x=0.312, y=0.329)
	Primaries	Trinitoron
	Monitor	Display Using Monitor Compensation OFF

Windows:	RGB	Custom
	Gamma	2.2
	White point	Custom (Custom value x=0.312, y=0.329)
	Primaries	Trinitoron
	Monitor	Display Using Monitor Compensation OFF

3.Image cache memory setting
Edit → Preferences - Memory & Image cache... → Check off→ Use cache for histgrams →

Screen Dust

1. Measure Equipment: Photoshop

2. Capture Condition:

Light source	Luminance Box
Illumination	EV10
Lens	2613
Capture Distance	Stick a lenz to a luminance box.
Exposure Mode	A mode (F11)
WB	Preset (A light source)
Focus	→ position
Image Size	3008x2000 (L)
Compression Mode	Fine or Std.

3. How to measure:
1). Stick to a luminance box and capture, and open in PC.
2). with 33.3% magnification, select Image > Color compensation > Level compensation in Photoshop, set the Input level to 32 1 233 to confirm whether any stains can be seen on the screen.

4. Quality Regulations:
When stain is admitted, follows the following judgment standards, when setting Iput level of level Conpensation (select Image > Color compensation > level compensation in Photoshop to 32 1 233.

When you measure L* stain and its peripheral, L* ratio must be 1.3% or less.
L* ratio = (L* around stain bristletail → L* at stain bristletail position)/ L* around stain bristletail → 100 → 1.3

5. Do the cleaning on the CCD, when users point out the dust on the CCD.
*It is easy to find the dust on screen by using "Auto Levels" of Adobe Photoshop.
This command is located in the "Adjustment" sub-menu in the "Image" menu.

Standard

Exposure

Manual Shutter-speed

ManualShutter-speed

SS	Period (ms)	Tolerance (ms)	Allowable range	Exposure variation
1/4000	0.244	0.156 - 0.383	With in 0.45EV	Difference between Max. and Min. value among range A, B, and C: within ±0.6EV Difference between range A & B, B & C: within ±0.3E V
1/2000	0.488	0.333 - 0.714		
1/1000	0.977	0.793 - 1.202		
1/500	1.950	1.590 - 2.40		
1/250	3.910	3.17 - 4.81		
1/125	7.810	6.35 - 9.62		
1/60	15.60	12.7 - 19.2	With in 0.30EV	
1/30	31.30	29.2 - 33.5		
1/15	62.50	58.3 - 67.0		
1/8	125	117 - 134		
1/4	250	233 - 268		
1/2	500	467 - 539		

X-sync Time Lag

X-sync delay time

Shutter speed	Item	Allowance
1/160 (AS-OFF)	X-sync delay time	0.5 ms or longer
	From X ON to the 2nd curtain appearance	2.0 ms or longer
1/125 (AS-ON)	X-sync delay time	0.9 ms or longer
	From X ON to the 2nd curtain appearance	2.0 ms or longer

CHECK LIST

Resolving Power

RequiredEquipment

PC (Adobe Photoshop installed)
2766 Resolving Power Chart (W)
LENS: 2613
Fluorescent Stand SQ967W
CF card
AC adapter (AC-11)
Tripod

* 2766 Resolving Power Chart (W) contains 3 charts. Set the A-chart at the center, then set the B-charts at its both side. (Align 3 charts with the positioning lines on them.)

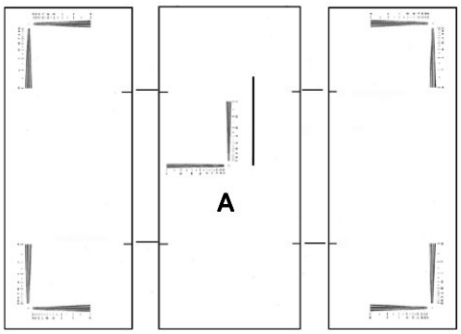

Check

1. Insert the CF card in the cart slot of the camera, and set the camera on the tripod.
2. Set up the equipment and distance as shown on the following table.

Image size	3008x2000 (L) or 2256x1496 (M)
Compression Mode	Fine or Std.
Exposure Mode	A mode (Aperture full open)
Focus Mode	Auto Focus
Flash Mode	Cancell
Distance	Approx. 3m (Using Standard lens 2613)

3. Capture the charts (for Wide-angle) at the when focusing from both and near end for 5 times.
   * Light up the chart (center and 4 corners) with the fluorescent stand SQ967W (inverter fluorescent light)). The dim lighting may result in the incorrect reading due to low contrast.
   If the amount of the light is insufficient, capture each half separately.

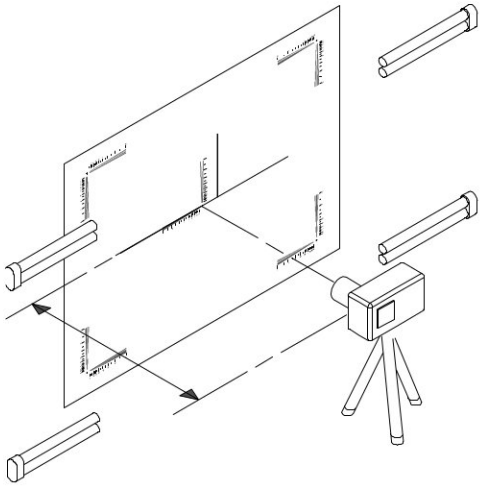

4. Open the images with Adobe Photoshop on PC, check the resolving power.
   * Do not apply any image correction to test images on Photoshop. (Image correction such as contrast, tone Curves compensation or histogram operation may cause incorrect reading.)
   * All the 10 pictures taken should have resolving power as below when read under magnification of 2.5X.

Standard Center: 884 lines or greater

Moreover, satisfy the following about the scene of resolving power best among ten scenes.

Standard Center: 1400 lines or greater/Corners: 775 lines or greater

Reading	Number of lines (television resolution)	Reading	Number of lines (television resolution)
A	1400	G	800
B	1300	H	700
C	1200	I	600
D	1100	J	500
E	1000	K	400
F	900		

Image quality

Check Grayscales and Color Reproduction to verify performance.
Capture images with the given condition and save them to a computer, and then read the color data with the Color Calculator 2 (2766-0008-75).

Color Calculator 2 Installation

1. Load the Color Calculator 2 CD-ROM to the computer.
2. Click on English folder in the CD-ROM.
3. Double-click on SET UP.exe. The installer program starts automatically.
4. Continue the installation according to the screen until "Finish" appears.

Using Color Calculator 2

1. Click Program in Start menu, and click on "Color Calculator".
2. Click on Read Image button and select the desired image in Select Image window.
3. Set the modes as below.

Check Item	Grayscales, Color reproduction
Chart	Macbeth Color Checker
Color Space	sRGB
Color Display Mode	RGB+L*a*b*
Calculate Mode	Multi Area
Cropping Area Size	20×20 Pixel

4. In Multi Area mode, click and drag the edge of the frame to select the entire color chart.
5. Click on Calculate button. Data calculation starts, and the result is listed in the right window.
   Multi Area mode: The average readings for each of 24 areas are listed.
   Center Single Area: The average reading for the center area is listed.

Macbeth Color Checker

B	G	R	Y	M	C
1	2	3	4	5	6

Grayscales

MeasuringCondition
Chart: Macbeth Color Checker
Light Source: Light Source-A (Tungsten) 6500+/-100 lux.
Lens: Attach the lens (#2163) be sure to set the chart right in front of the camera so that the chart center aligns with the optical axis.
Distance (from the subject): 1.5m
Focus: MF (1.5m)
WB: Preset A light source
Image size: 3008x2000 (L), 2256x1496 (M) or 1504x1000 (S)
Compression Ratio: Std.
Exposure Condition: Proper Exposure

Standard
Read L* value of each square, and confirm all readings suffice the standard.

Chart	L*
1 (White)	93.8 ±5
2	82.1 ±10
3	67.5 ±10
4 (Gray)	51.2 ±10
5	28.9 ±10
6 (Black)	10.7 ±10

Color Reproduction

MeasuringCondition
Chart: Macbeth Color Checker
Light Source: Light Source-A (Tungsten) 6500+/-100 lux.,
Light source-C (Light source-A +LB B16 filter) 600+/-200lux,
White Fluorescent (FL-10W) 700+/-200lux.,
Flash (Built-in)
Lens: Attach the lens (#2613) be sure to set the chart right in front of the camera so that the chart center aligns with the optical axis.
Magnification: The taking a picture distance is adjusted with the focal length so that the width of the wide area AF display is corresponding to as many as four patches of Macbeth Color Checker.
White-balance: Light Source-A; Auto WB and Preset WB
Built-In flash; Auto WB
Other light source; Preset WB
Image Size: 3008x2000 (L) or 2256x1496 (M)
Compression Ratio: Fine or Std.
Exposure Condition: L* of a white patch of Macbeth color chart may become 95 5.

Standard
Read a* and b* value of each square, and confirm that all readings suffice the standard.
The tolerance level is all 10

	Light Source-A				Light Source-C		White Fluorescent		Flash (Built-in)	
WB	AWB		Tungsten		Cloudy		Fluorescence		AWB	
	a*	b*	a*	b*	a*	b*	a*	b*	a*	b*
B	10.6	-20.3	42.6	-68.3	27.5	-51.4	31.5	-59.9	23.6	-50.5
G	-28.0	45.3	-43.2	23.6	-41.3	33.6	-42.1	40.3	-33.8	29.8
R	66.1	56.9	65.9	48.4	50.8	25.9	56.2	41.1	55.4	40.4
Y	15.1	77.6	-7.2	76.2	-4.1	79.3	-3.2	84.9	-1.4	69.0
M	61.1	38.5	59.5	-15.1	49.0	-16.0	51.1	-21.6	47.4	-8.8
C	-16.4	-1.6	-4.2	-43.0	-21.7	-26.7	-8.0	-36.2	-13.8	-26.0
LS	32.8	51.2	16.8	13.0	13.3	17.0	15.8	20.6	17.3	15.4

Current Leak

Current leak (7.4 volts/3 A) (Using Power Supply Adapter <2755-0005-75>

Item			Standard	
			OTP	Mask
Main Switch	OFF		100 micro A or below	
	ON	Back LCD APO status	300 mA or below	
		Standby status	700 micro A or below	450 micro A or below

BC Lock voltage

BC lock voltage (Using Power Supply Adapter for 2766 <2766-0013-76>)

Item	Standard
Lock	6.8V (With attachment black plug)
Unlock	7.4V (With 0.5 ohm attachment yellow plug)

2186 Supplementary Information Index

Division	Camera CS Division
Issued	December 08, 2005

Approved by	Verified by	Written by
Yata		Ueno

Issued/Code/Version/Page			Title	Approved by	Verified by	Written by
'05.09.15	QS FA2186-S01E	1	Handling instructions on static electricity of Position detection assy (Slider Assy: 3261-0911)	Yata		Ueno
'05.09.22	QS FA2186-S02E	2	External flash control	Yata		Ueno
'05.09.22	QS FA2186-S03E	3	Repair information for a blooming image	Yata		Ueno
'05.10.11	QS FA2186-S04E	4	Firmware Installation	Yata		Ueno
'05.11.02	QS FA2186-S05E	5	Battery charge prevention using AC-11	Yata		Ueno
'05.12.08	QS FA2186-S06E	6-9	Initial repair information	Yata		Ueno

No. QS FA 2186-S01E Sep.. 2005

SERVICE MANUAL SUPPLEMENTARY INFORMATION	CODE NO.	2186 Series
	MODEL	DYNAX 5D MAXXUM 5D SWEET DIGITAL 5 DIGITAL

Handling instructions on static electricity of Position detection assy (Slider Assy: 3261-0911)

About Position detection assy:

Position detection assy is sensitive to static electricity. Keep this parts under 50V.

Symptom:

CCD center adjustment (CENTER) cannot be done. Error occurs.

Precautions:

Care should be taken when taking out from the antistatic bag. Electrostatic discharge damage may occur.
Repair person must wear ground strap.
Be sure to ground the workbench and mat.

This information should be filed in your service manual.

KONICA MINOLTA PHOTO IMAGING, INC.

No. QS FA 2186-S02E Sep. 2005

SERVICE MANUAL SUPPLEMENTARY INFORMATION	CODE NO.	2186 Series
	MODEL	DYNAX 5D MAXXUM 5D SWEET DIGITAL 5 DIGITAL

External flash control

Treatment on underexposure by #2181 with external flash

1) External flash adjustment to lower pre-flash level (no service information issued)
2) Camera adjustment to amplify final flash level by firmware upgrade and 1). (cf. Supplementary Information No. QS FA 2181-S04E)

Putative problem with DSLRs (#2186 or later) plus external flash

When an external flash with 1) adjustment is used with these DSLRs, it results in overexposure.

Treatment at after-sales service facilities

In booking in a claimed product, confirm the condition of user's product and book in his/her external flash and #2181 if possible.

1. Upgrade #2181 firmawre and conduct adjustment.
   cf. Supplementary Information No. QS FA 2181-S04E
2. Adjust the external flash to lower pre-flash level (flat flash-firing).
   cf. Supplementary Information No. QS FA 2181-S04E
3. Photograph the standard reflection paper II by the #2186 with the external flash under the condition below:

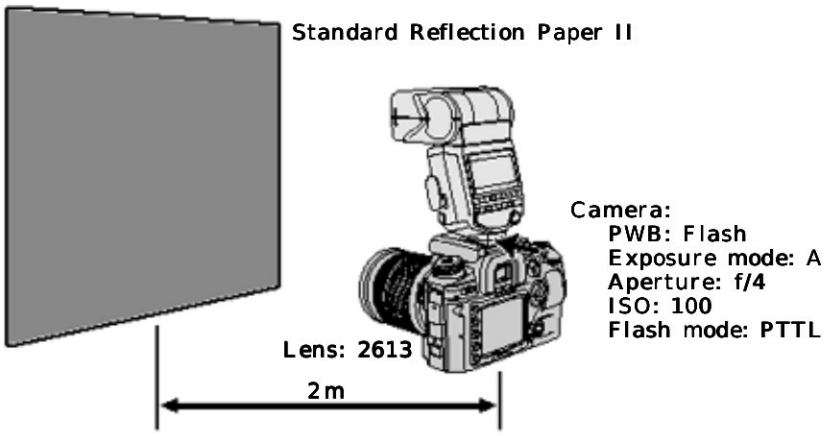

4. Open the image file via the color imformation software 'Color Calculator 2'
   Confirm that the G level is within the range of 127+-10.
   (Refer to page 5-6 of #2181 Check List for the setting of the color information software 'Color Calculator 2'.
   If not, implement Flash Level Shift (cf. page 57 of Repair)

With Adobe Photoshop:

1. Specify the image range of 256x256 pixels
2. Select 'Histogram' in the 'Image' manu options.
3. Read the average value with specifying green for the channel.

SUPPLYMENTARY INFORMATION

This information should be filed in your service manual.

KONICA MINOLTA PHOTO IMAGING, INC.

SERVICE MANUAL SUPPLEMENTARY INFORMATION	CODE NO.	2186 Series
	MODEL	DYNAX 5D MAXXUM 5D SWEET DIGITAL 5 DIGITAL

Repair information for a blooming image

Conditions

The blooming generates on the scene that the light-dark difference is large and which has a bright part on a dark part.

Cause

The value of V-sub voltage is wrong.

Repair method

1. Check the bar code on a main PCB board assy, and conduct the CCD Vsub voltage adjustment. (VSUB)
2. Conduct other related adjustments / settings required (see Repair Guide pg. 34).

Check after repair

1. Take an image of a scene with has brightness difference as shown in the following figure (color viewer + cleaning paper) with setting at "correct exposure +3EV."
2. Check that blooming has not occurred in the image.
   * When blooming has occurred, the CCD assy and main PCB assy may be defective.

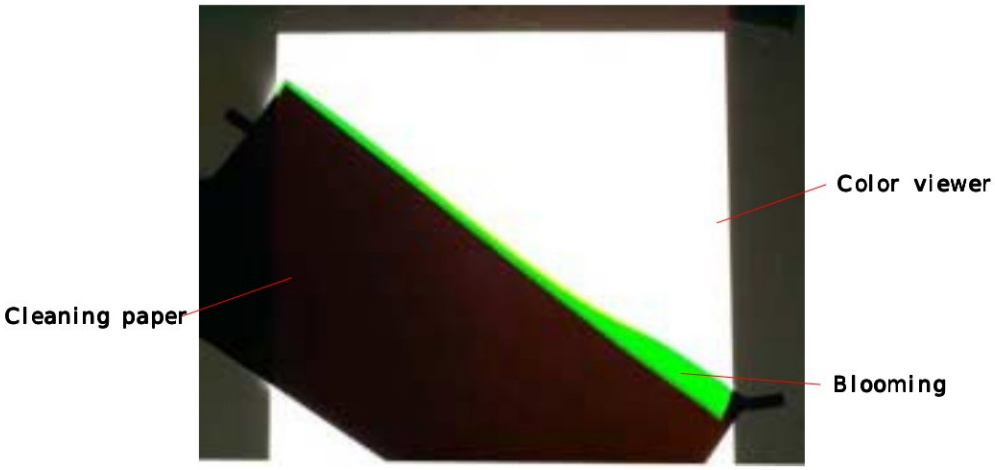

This information should be filed in your service manual.

KONICA MINOLTA PHOTO IMAGING, INC.

SUPPLYMENTARY INFORMATION

No. QS FA 2186-S04E Oct. 2005

SERVICE MANUAL SUPPLEMENTARY INFORMATION	CODE NO.	2186 Series
	MODEL	DYNAX 5D MAXXUM 5D SWEET DIGITAL 5 DIGITAL

Firmware Installation

Install firmware after replacing the MAIN PCB ASSY (#2186-0410).

Equipment required

Firmware Ver.1.00 for 2186 <2186-0002-75>
*Available at Camera CS Information Site.

Firmware update

1. Decompress the Firmware Ver.1.00 for 2186 file.
2. Copy the five files (dsc.app, dsc.brd, dsc.brm, dsc.cam, ram.bin) in the 2186 firmware folder created to a CF card.
3. Insert the above mentioned CF card to the camera.
4. Turn on the main switch while pressing the lens lock button.
   Access lamp glows when the firmware updating starts.
5. Remove the battery when the access lamp turns off or blinks. Fimware updating is complete.

Firmware check

The menu is displayed with Menu button ON and Display switch button is pushed.
Display: Ver.1.00

SUPPLYMENTARY INFORMATION

This information should be filed in your service manual.

KONICA MINOLTA PHOTO IMAGING, INC.

No. QS FA 2186-S05E Nov. 2005

SERVICE MANUAL SUPPLEMENTARY INFORMATION	CODE NO.	2186 Series
	MODEL	DYNAX 5D MAXXUM 5D SWEET DIGITAL 5 DIGITAL

Battery charge prevention using AC-11

Symptom:

If the AC-11 is connected in the condition that a battery is in the camera, the following symptom will occur depending on the battery capacity.

Battery will be charged.

Battery will be exhausted.

The repair method:

Remove W16/BLACK.

Negative effect of the above repair method:

Reset action will be performed if AC-11 is connected when a battery is in the camera. (Same as #2181)

Related information:

PML: QS FA 2186-P003

This information should be filed in your service manual.

KONICA MINOLTA PHOTO IMAGING, INC.

No. QS FA 2186-S06E Dec.. 2005

SERVICE MANUAL SUPPLEMENTARY INFORMATION

CODE NO. 2186 Series

MODEL DYNAX 5D
MAXXUM 5D
 SWEET DIGITAL
 5 DIGITAL

Initial repair information

symptom	Cause	Measure
Unexposure at the first time after leaving for a certain period. (Error 58)	Pressure to the Shutter assy cam roller was applied for a certain period.	AF charge assy (2186-0521-02) and shutter assy (2186-0210) exchange
Fault in Anti-Shake function (The initial position setting cannot be done at the time of the power SW ON. Vibration sound generated.)	Aori Adj screw was mixed in the slider assy. (surplus parts) 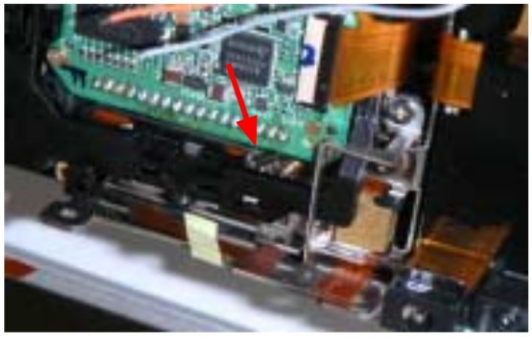	Surplus parts removal.
No Anti-Shake scale.	Deformation of Anti-Shake SW contact (the first and second ones were bent) 	Anti-Shake SW contact (2186-1420) exchange
Anti-Shake scale cannot be turned OFF.	Deformation of Anti-Shake SW contact (the first and second ones were bent) 	Anti-Shake SW contact (2186-1420) exchange
Coupler drive repeats at the power ON.	LCD harness (blue) was caught between chassis.	Unclip LCD harness (2186-0442).

This information should be filed in your service manual.

KONICA MINOLTA PHOTO IMAGING, INC.

SUPPLYMENTARY INFORMATION

symptom	Cause	Measure
Abnormal LCD display 101	LCD harness (red) was caught between chassis 	Unclip LCD harness (2186-0442).
LCD sometimes blinks.	Eye-detection failure (unmodified body) 	Measure will be informed by PML as soon as the parts are ready.
Camera does not start.	Disconnecion of the Fuse (F002) on DCDC PCB assy. After replacing the DCDC PCB assy, the symptom did not recur. (shutter release and removing and inserting battery) Irregular case?	DCDC PCB assy (2186-0402) exchange
MF rotation -- heavy	Unhooked 2168-2605 and 2186-2611 due to deformed latch of 2186-2611. 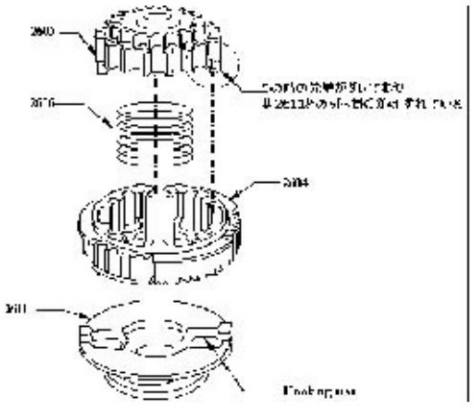	AF charge assy (2186-0521) exchange
Abnormal noise continues and all the Anti-Shake scale blink.	Loose connection of Anti-Shake FPC 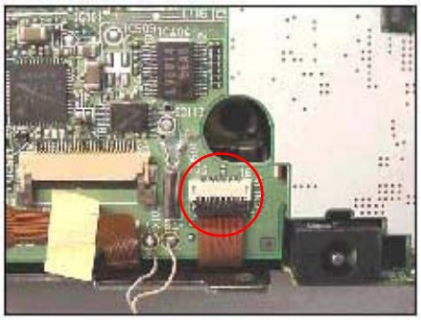	Reinstall Anti-Shake FPC of Slider assy (2186-0901)

This information should be filed in your service manual.

KONICA MINOLTA PHOTO IMAGING, INC.

symptom	Cause	Measure
Eject lever does not lock.	Metal plate and a lever link component interfere. A parting part and a lever link component interfere.	Eject connector (9383-0561-50) exchange
CF card cannot be inserted fully.	At the time of reappearance, it is in the state where CF card was inserted, and when pushing eject button and taking out a card, a finger is touching so that it may support CF card. It recurs in the timing.	Eject connector (9383-0561-50) exchange
F -- Display	BL contact FPC pattern dirt 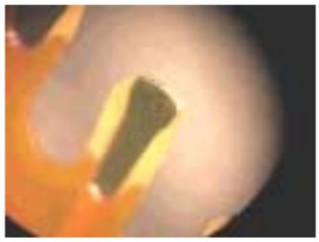	BL contact holder assy (2186-0150) exchange
Anti-Shake access lamp stays on.	Carbon shaft holder SP at the slider A side of Slider assy came off. 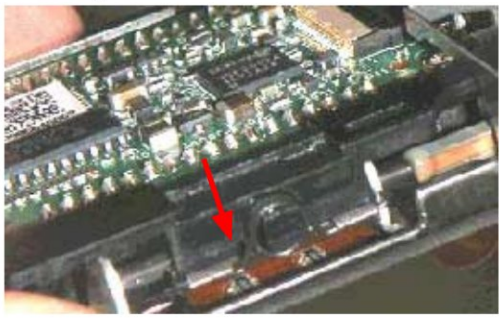	Reinstall Carbon shaft holder SP of Slider assy (2186-0901)
Abnormal image -- entirely black	IC on CCD PCB destroyed (output 0V). Presumption: It was the full destruction of IC which was damaged by the connection mistake to a unit checker.	CCD assy (2186-0271) exchange
Abnormal image -- entirely white	IC on CCD PCB destroyed (output 2V). Presumption: It is the full destruction of IC which was damaged by the connection mistake to a unit checker.	CCD assy (2186-0271) exchange
Preview button does not function	No click feeling due to misalignment of SW FPC. 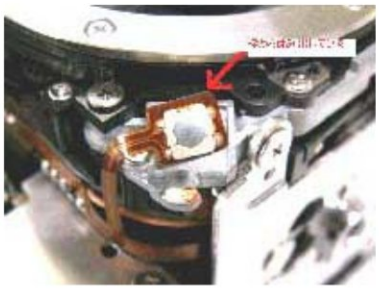	Preview button SW FPC re-installation

This information should be filed in your service manual.

KONICA MINOLTA PHOTO IMAGING, INC.

symptom	Cause	Measure
Exposure mode dial and WB dial failure. Shutter release failure (stays S2 ON). Self LED stays lighting.	I/O FPC cover was scratched by the main chassis edge, and short-circuit with the internal pattern. 	I/O FC assy (2186-0406) exchange
Flash UP is not detected.	Black lead wire was crushed under the shoe plate by the assembly-operation mistake. R606 and R607 on the top cover FPC were burned and damaged.  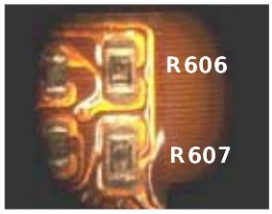	Top cover FPC assy (2186-0407) exchange, W152 exchange and arrangement
INF missing	Short-circuit with adjacent pattern due to poor insertion to the connector of IF LCD holder assy FPC (inclination) 	Connect FPC of IF LCD holder assy.

Parts Modification List

About the written contents of a PARTS MODIFICATION LIST.

Description for each item in PML.

(1) Code number of the model and page number.
(2) Reference No..
(3) Relevant page of Parts List.
(4) Reference No. of its creation post is shown.
(5) Number of relevant Supplementary Information if any.
(6) Reason of modification.
(7) Models in which the part is used in common.
(8) Previous parts number.
(9) New parts number.
(10) The part marked as "~~Previous~~" is no longer available as a service part. Use new Part.
(11) Arrow (→, ←) show parts interchangeability.
→ ○ (×) : Previous part can be (cannot be) replaced with new part.
× (○) ← : New part cannot be (can be) replaced with previous part.
(12) Name of the newly added part. See Parts List for the name of current Parts.
(13) Description of the modification.
(14) When the part cannot be replaced as a single one, vertical colum shows the related parts to be replaced as a set.
Arrows (→, ←) at base of table show interchangeability or parts as a set.
(15) Continued on the next page.

部品変更連絡票の記載内容について

記載項目の説明

(1) 機種コードと版（改訂）およびページを示します。
(2) 管理Ｎｏ.を示します。
(3) 記載されているパーツリストの該当ページを示します。
(4) 作成部署の管理No.を示します。
(5) 関連情報、修理情報等がある場合は、サプリメンタリーインフォメーションNo.等を右上に示します。
(6) 変更理由を示します。
(7) 代表機種を含む共通機種を示します。
(8) 変更前の部品番号を示します。
(9) 変更後の部品番号を示します。
(10) "~~Previous~~" は、供給不可を表します。その場合は"NEW" 部品を使用して下さい。
(11) 矢印（ ， ）は互換性を示しています。
○ (×) : 旧部品を新部品に交換しても良い（交換してはいけない）。
×(○)← : 新部品を旧部品に交換してはいけない（交換しても良い）。
(12) 新設部品は部品名称を記載します。それ以外の部品は、パーツリストを参照して下さい。
(13) 参考事項がある場合は、記載します。
(14) その部品単独の変更でなく、関連変更部品がある場合は、表の縦の列で関連部品変更を示しています。
表の（ ， ）は、関連部品セットでの互換性を示しています。
(15) 次ページに続くことを示します。

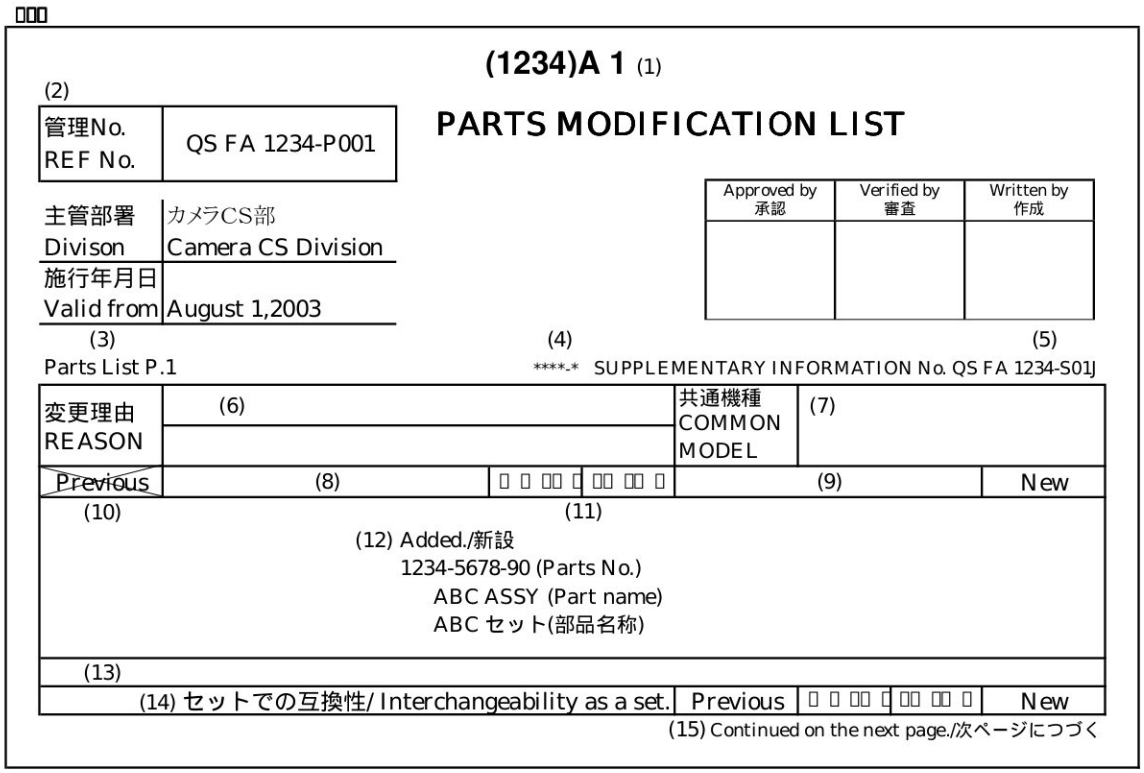

PARTS MODIFICATION LIST

REF No. 管理No.	QS FA 2186-P001

Division 主管部署	Camera CS Division カメラCS部
Valid from 施行年月日	October 11. 2005

Approved by 承認	Verified by 審査	Written by 作成
Yata		Ueno

Parts List P. 11

2186-1092

REASON 変更理由	生産都合 For efficient production			COMMON MODEL 共通機種	2186-Series	
Previous	(2186-4511-01)	□ □	□ □	□ □ □ □ □ □		New

2186-0121-01
2186-0122-01

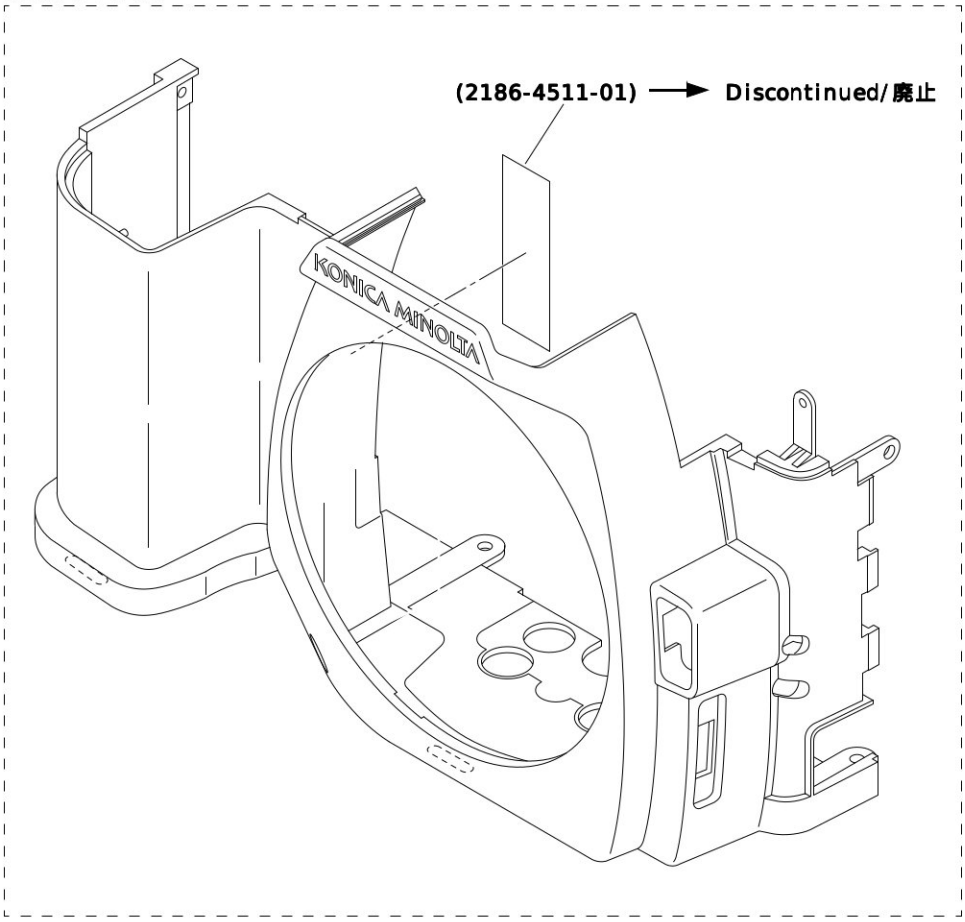

PML

□本案内状に従い、パーツリストへの転記等、メンテナンスを行なってください。
According to this list, correct □Parts List□ in Service Manual for effective parts management.

PARTS MODIFICATION LIST

REF No. 管理No.	QS FA 2186-P002

Division 主管部署	Camera CS Division カメラCS部
Valid from 施行年月日	October 25. 2005

Approved by 承認	Verified by 審査	Written by 作成
Yata		Ueno

Parts List　P. 2

仮-955

REASON 変更理由	サービス供給として設定する To supply as a spare part			COMMON MODEL 共通機種	2186-Series
Previous	2186-0410-08	□□	□□	2186-0410-08	New
Previous	□□□□□□	□□	□□	(9383-0561-50)	New

2186-0410

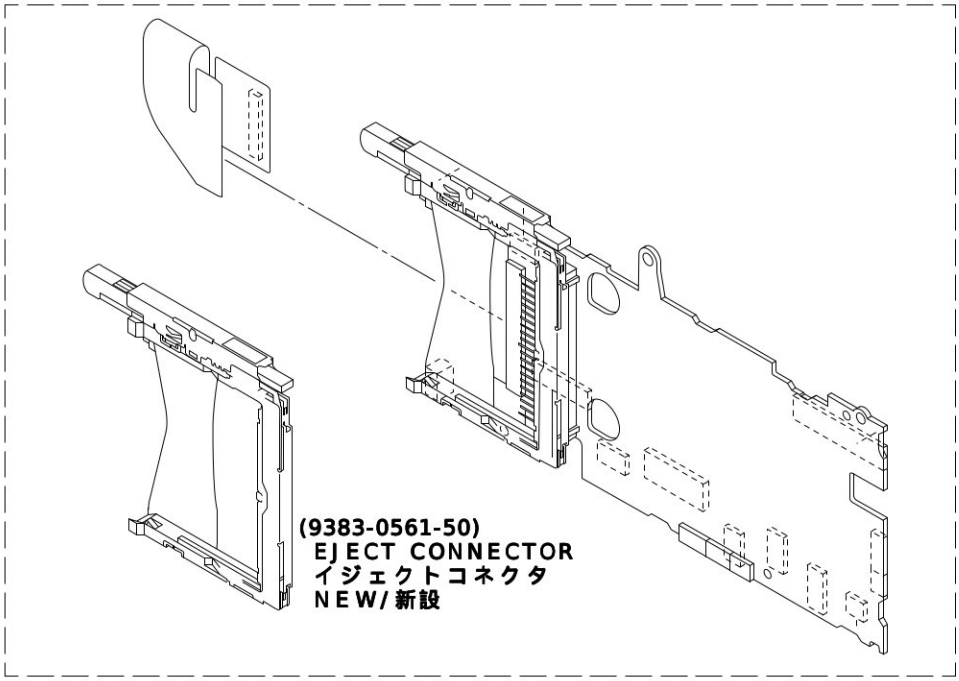

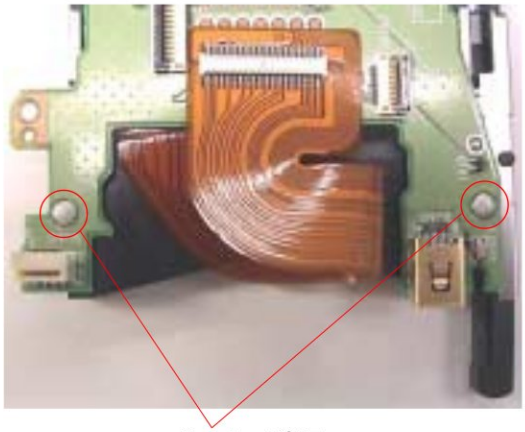

Solder/半田

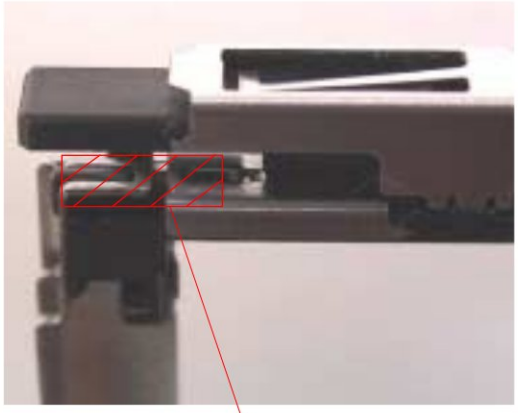

G G-115

PML

□本案内状に従い、パーツリストへの転記等、メンテナンスを行なってください。

According to this list, correct □Parts List□ in Service Manual for effective parts management.

KONICA MINOLTA PHOTO IMAGING, INC.

REF No. 管理No.	QS FA 2186-P003

PARTS MODIFICATION LIST

Division 主管部署	Camera CS Division カメラCS部
Valid from 施行年月日	November 02. 2005

Approved by 承認	Verified by 審査	Written by 作成
Yata		Ueno

Parts List P. 8, 12 SUPPLEMENTARY INFORMATION No. QS FA 2186-S05E/J 2186-1140 - 1143

REASON 変更理由	電池装填状態でAC-11装着による電池充電の防止 Battery charge prevention using AC-11			COMMON MODEL 共通機種	2186-Series
Previous	2186-1087-01	□□	□□	□□□□□□	New
Previous	2186-1088-01	□□	□□	□□□□□□	New
Previous	9384-2290-90	□□	□□	□□□□□□	New
Previous	9391-1207-00	□□	□□	□□□□□□	New

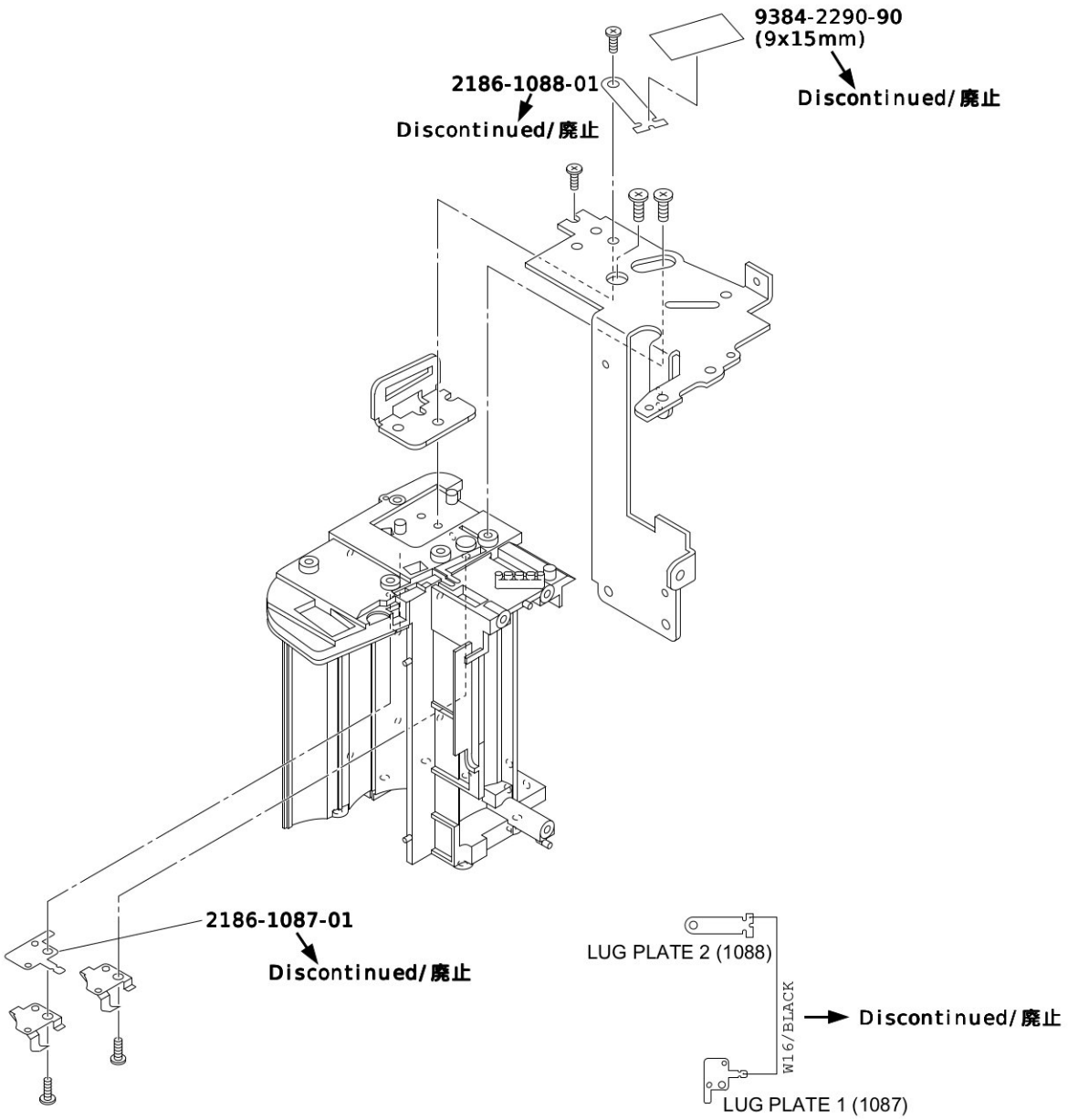

□本案内状に従い、パーツリストへの転記等、メンテナンスを行なってください。

According to this list, correct □Parts List□ in Service Manual for effective parts management.

KONICA MINOLTA PHOTO IMAGING, INC.

PML

PARTS MODIFICATION LIST

REF No. 管理No.	QS FA 2186-P004

Division 主管部署	Camera CS Division カメラCS部
Valid from 施行年月日	November 07. 2005

Approved by 承認	Verified by 審査	Written by 作成
Yata		Ueno

Parts List P. 6

2186-1129

REASON 変更理由	シャッター速写によるError 58の改善 Corrected the Error 58 by fast shutter-release			COMMON MODEL 共通機種	2186-Series
Previous	2186-0500-01	○		2186-0500-02	New
Previous	(2186-0521-01)	○		(2186-0521-02)	New

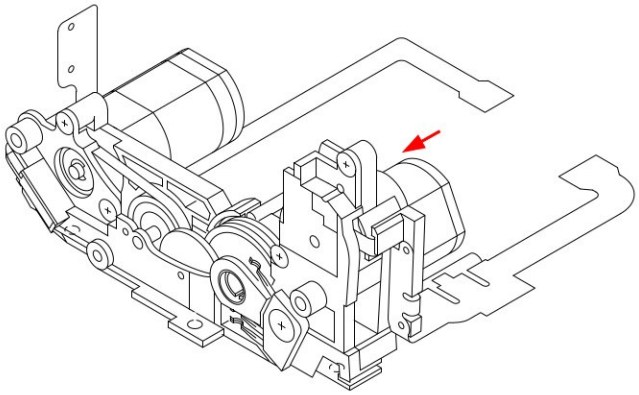

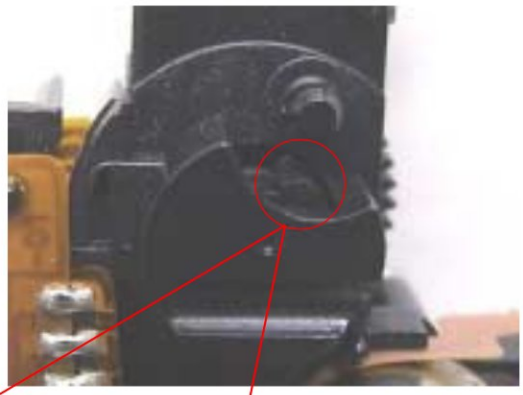

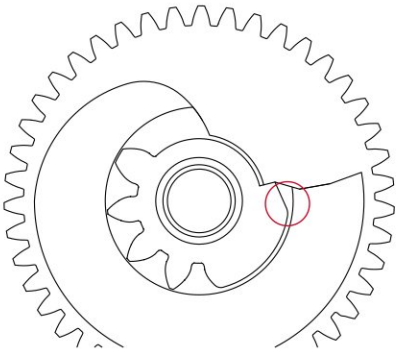

2186-0500-01
(2186-0521-01)

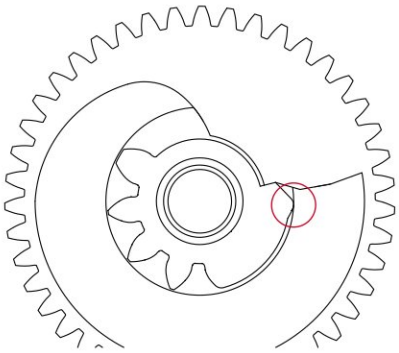

2186-0500-02
(2186-0521-02)

When replasing the AF charge baseplate assy against Error 58, please replace the shutter assy with it.
At removal and installation of the AF charge baseplate, be sure to follow the standard method. (Don't remove and install downward)
Error 58においてAFチャージ台板セットを交換する場合、シャッターセットも一緒に交換して下さい。
チャージ台板セットの取外し・取り付けは正規の方法（下方向に抜き差しはしない）で行って下さい。

本案内状に従い、パーツリストへの転記等、メンテナンスを行なってください。
According to this list, correct Parts List in Service Manual for effective parts management.

KONICA MINOLTA PHOTO IMAGING, INC.

PML

PARTS MODIFICATION LIST

REF No. 管理No.	QS FA 2186-P005

Division 主管部署	Camera CS Division カメラCS部
Valid from 施行年月日	January 17. 2006

Approved by 承認	Verified by 審査	Written by 作成
Yata		Ueno

Parts List　P. 5

2186-1110

REASON 変更理由	接眼誤検知による□□□点滅防止 Prevention against LCD blinking due to eye-detection error			COMMON MODEL 共通機種	2186-Series
Previous	2186-0500-02	□ □	□ □	2186-0500-02	New
Previous	(2186-0580-01)	□ □	□ □	(2186-0580-01)	New
Previous	[2186-0506-01]	□ □	□ □	[2186-0506-01]	New
Previous	□ □ □ □ □ □	□ □	□ □	9564-2234-97	New
Previous	□ □ □ □ □ □	□ □	□ □	9391-0807-00	New

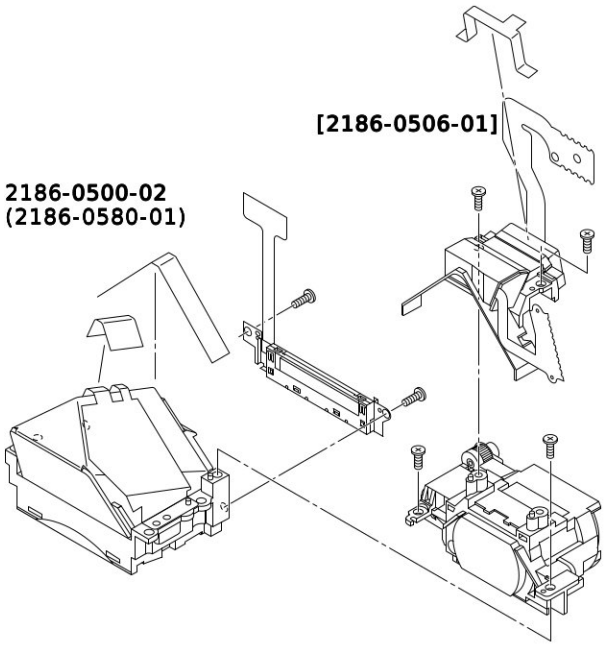

Type-1/タイプ-1

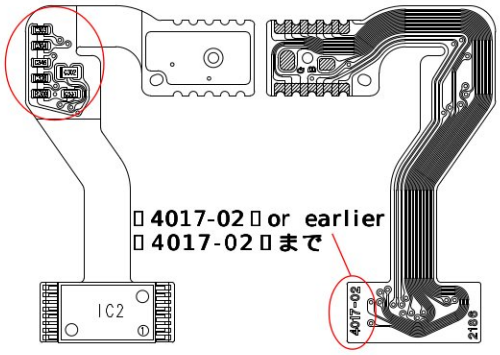

□4017-02□or earlier
□4017-02□まで

Type-2/タイプ-2

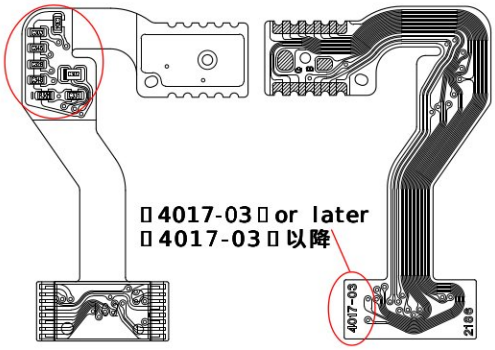

□4017-03□or later
□4017-03□以降

9564-2234-97
CAPACITOR (C901)
コンデンサ
Added./新設

9391-0807-00
W901
Added./追加

In use of Type-2 of Touko Assy, remove #9564-2234-97 (CAPACITOR (C901)) and lead wire (W901).
投光セットがタイプ-2の物を使用する場合、#9564-2234-97 (CAPACITOR (C901))とリード線 (W901)は取外すこと。

□本案内状に従い、パーツリストへの転記等、メンテナンスを行なってください。
According to this list, correct □Parts List□ in Service Manual for effective parts management.

KONICA MINOLTA PHOTO IMAGING, INC.

PML

PARTS MODIFICATION LIST

REF No. 管理No.	QS FA 2186-P006

Division 主管部署	Camera CS Division カメラCS部
Valid from 施行年月日	January 17. 2006

Approved by 承認	Verified by 審査	Written by 作成
Yata		Ueno

Parts List P. 6

2186-1133,1134

REASON 変更理由	Error 5b (絞り作動)の改善 Corrected the Error 5b (Aperture operation error)			COMMON MODEL 共通機種	2186-Series
Previous	(2186-2532-02)	□○	□□	(2186-2532-03)	New
Previous	(2186-2534-01)	□○	□□	(2186-2534-02)	New

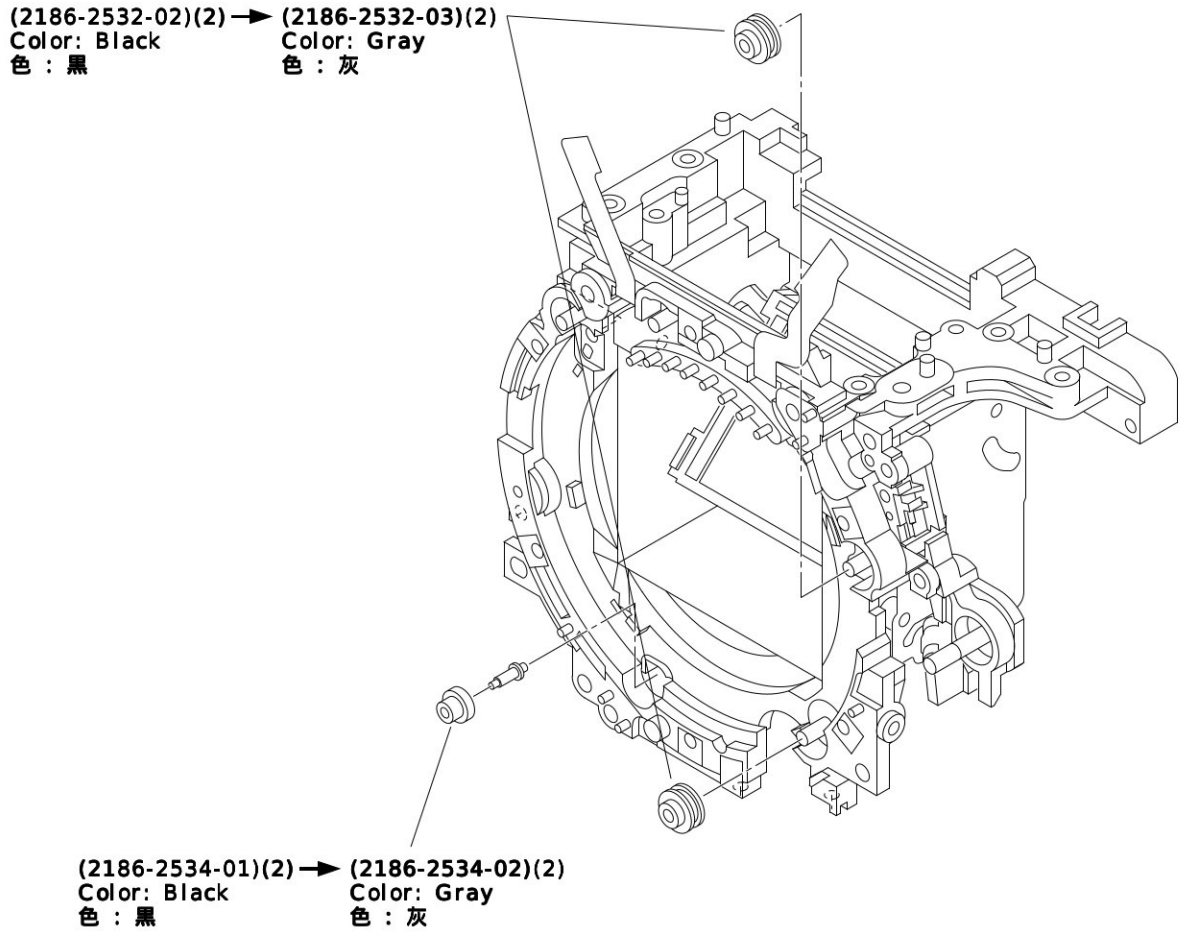

PML

□本案内状に従い、パーツリストへの転記等、メンテナンスを行なってください。

According to this list, correct □Parts List□ in Service Manual for effective parts management.

REF No. 管理No.	QS FA 2186-P007

PARTS MODIFICATION LIST

Division 主管部署	Camera CS Division カメラCS部
Valid from 施行年月日	January 17. 2006

Approved by 承認	Verified by 審査	Written by 作成
Yata		Ueno

Parts List P. 8

仮-976

REASON 変更理由	サービス供給として設定する To supply as a spare part			COMMON MODEL 共通機種	2186-Series
Previous	2186-0473-01	□ □	□ □	2186-0473-01	New
Previous	□ □ □ □ □ □	□ □	□ □	(9346-3361-01)	New

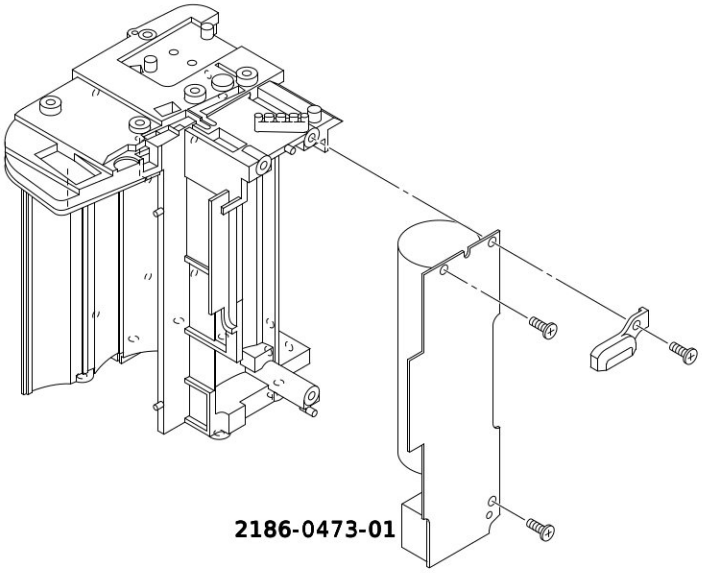

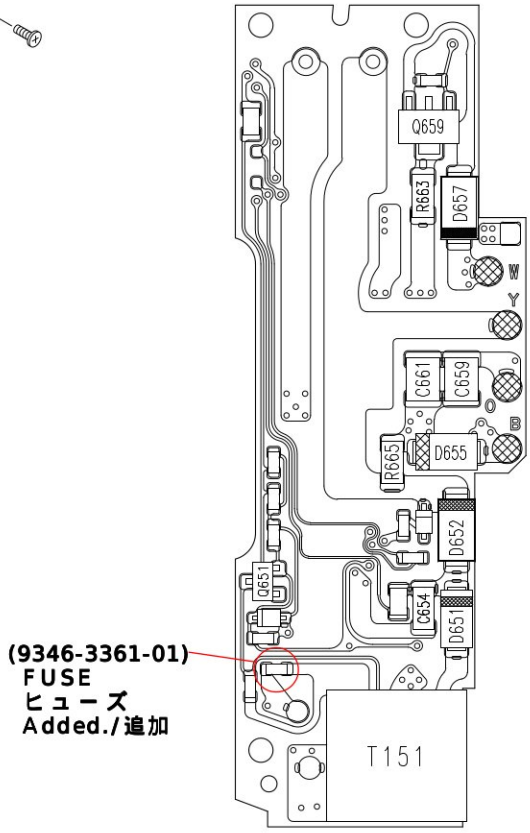

PML

□本案内状に従い、パーツリストへの転記等、メンテナンスを行なってください。

According to this list, correct □Parts List□ in Service Manual for effective parts management.

KONICA MINOLTA PHOTO IMAGING, INC.

PARTS MODIFICATION LIST

REF No. 管理No.	QS FA 2186-P008

Division 主管部署	Camera CS Division カメラCS部
Valid from 施行年月日	January 17. 2006

Approved by 承認	Verified by 審査	Written by 作成
Yata		Ueno

Parts List P. 2

仮-974

REASON 変更理由	サービス供給として設定する To supply as a spare part			COMMON MODEL 共通機種	2186-Series
Previous	2186-0402-03	□□	□□	2186-0402-03	New
Previous	□□□□□□	□□	□□	(2186-4901-01)	New
Previous	□□□□□□	□□	□□	(2186-4902-01)	New

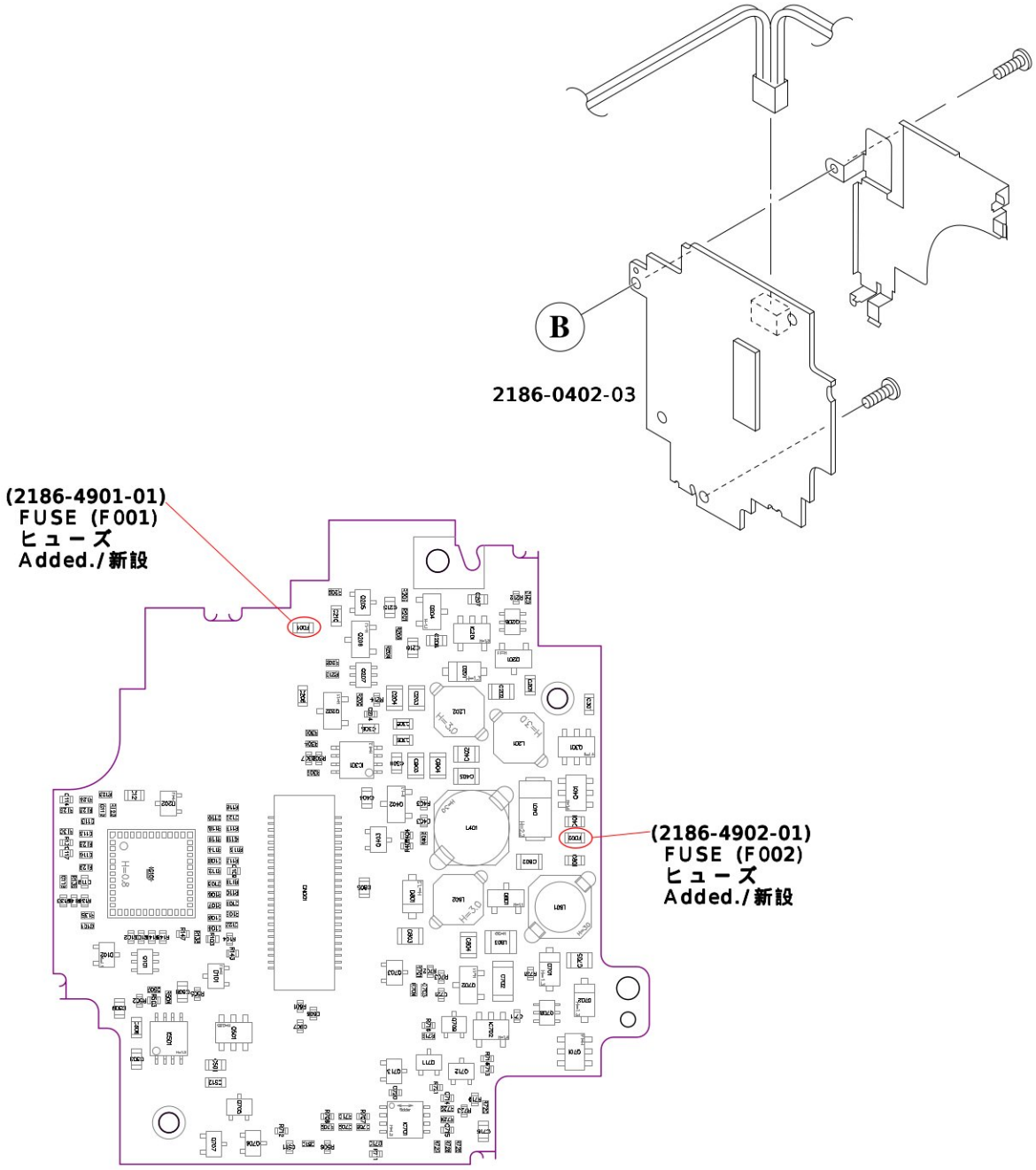

PML

□本案内状に従い、パーツリストへの転記等、メンテナンスを行なってください。

According to this list, correct □Parts List□ in Service Manual for effective parts management.

KONICA MINOLTA PHOTO IMAGING, INC.

PARTS MODIFICATION LIST

REF No. 管理No.	QS FA 2186-P009

Division 主管部署	Camera CS Division カメラCS部
Valid from 施行年月日	February 28 2006

Approved by 承認	Verified by 審査	Written by 作成
Yata		Ueno

Parts List P. 6, 7

2072-1242, 2181-1143

REASON 変更理由	欧州におけるRoHS規制への対応 Compliance with RoHS in Europe		COMMON MODEL 共通機種	2186-Series
Previous	(2186-0150-01)	□○ □□	(2186-0150-02)	New
Previous	(2181-5123-01)	□○ □□	(2181-5123-02)	New

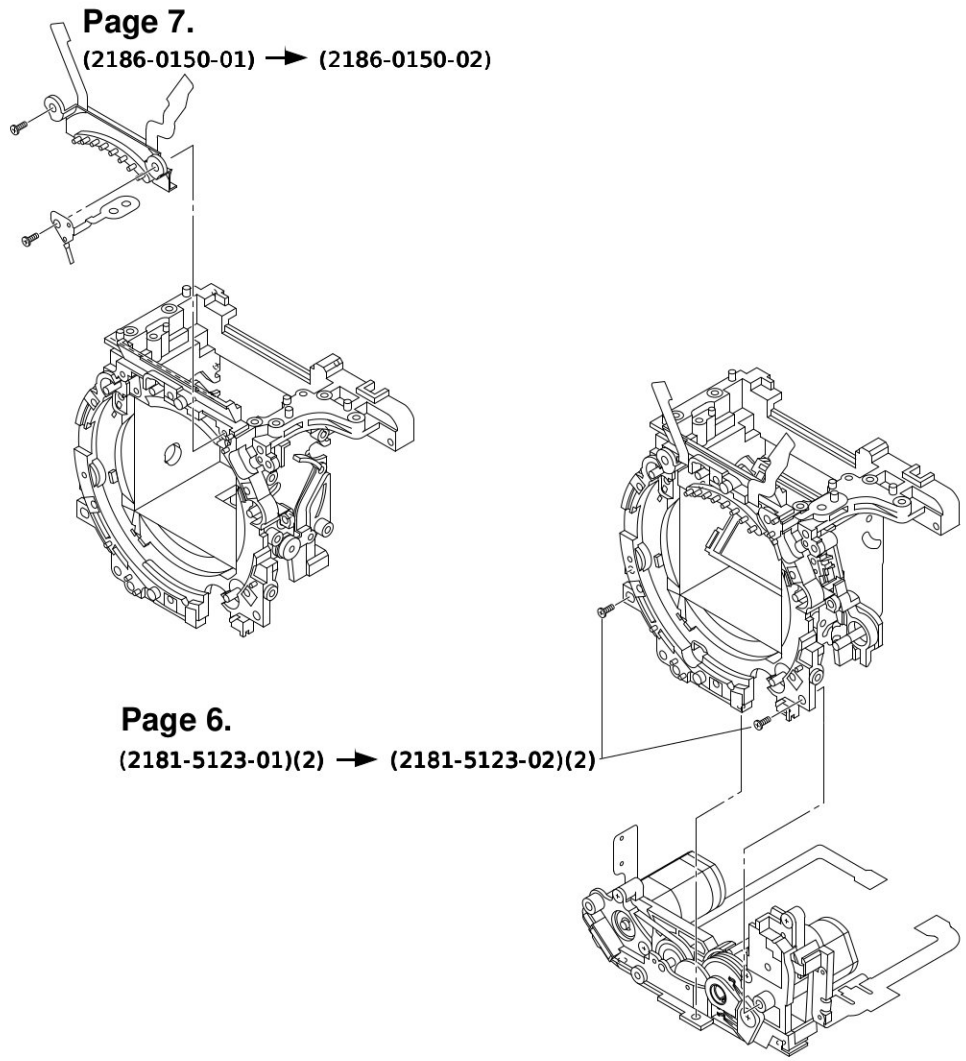

RoHS-compliant product may not be distinguished due to lens material/ processing change.
Please control by parts number.
材料/処理変更により見分けがつかない場合があります。
部品管理No.で管理して下さい。

□本案内状に従い、パーツリストへの転記等、メンテナンスを行なってください。

According to this list, correct □Parts List□ in Service Manual for effective parts management.

KONICA MINOLTA PHOTO IMAGING, INC.

PML

PARTS MODIFICATION LIST

REF No. 管理No.	QS FA 2186-P010

Division 主管部署	Camera CS Division カメラCS部
Valid from 施行年月日	February 28 2006

Approved by 承認	Verified by 審査	Written by 作成
Yata		Ueno

Parts List P. 2, 4

2186-1116, 2186-1139

REASON 変更理由	欧州におけるRoHS規制への対応 Compliance with RoHS in Europe		COMMON MODEL 共通機種	2186-Series	
Previous	2186-1173-01	○		2186-1173-02	New
Previous	2181-2706-01	○		2186-2706-02	New

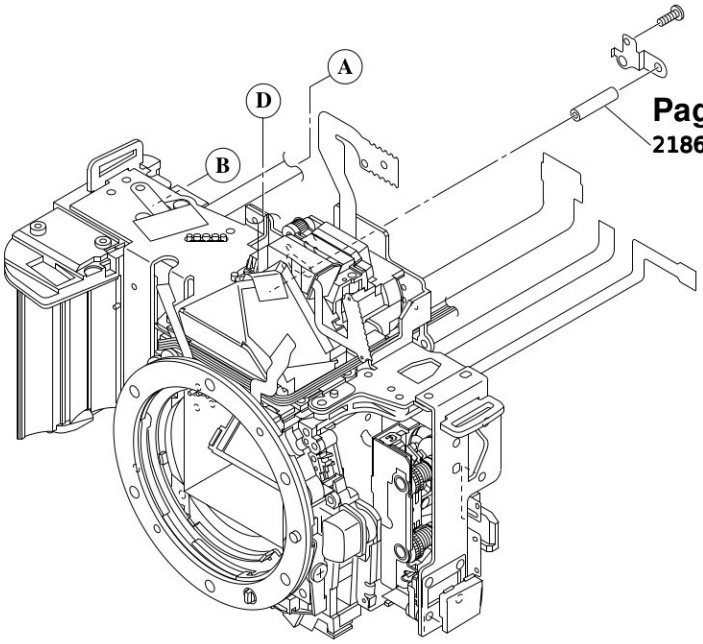

Page 2.
2186-1173-01 → 2186-1173-02

Page 4.
2181-2706-01(3) → 2186-2706-02(3)

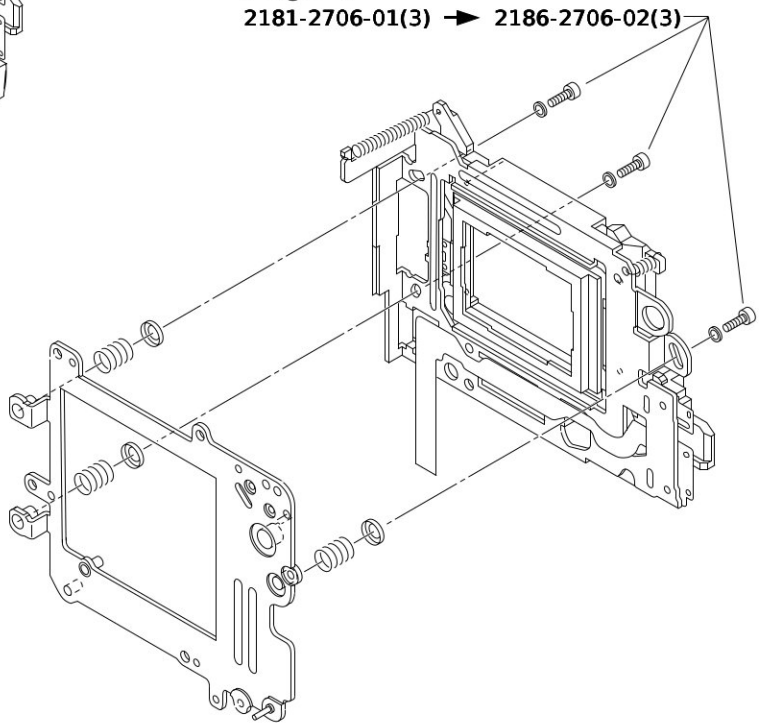

PML

RoHS-compliant product may not be distinguished due to lens material/ processing change.
Please control by parts number.
材料/処理変更により見分けがつかない場合があります。
部品管理No.で管理して下さい。

本案内状に従い、パーツリストへの転記等、メンテナンスを行なってください。
According to this list, correct Parts List in Service Manual for effective parts management.

KONICA MINOLTA PHOTO IMAGING, INC.

PARTS MODIFICATION LIST

REF No. 管理No.	QS FA 2186-P011

Division 主管部署	Camera CS Division カメラCS部
Valid from 施行年月日	February 28 2006

Approved by 承認	Verified by 審査	Written by 作成
Yata		Ueno

Parts List P. 9

2089-567, 2186-1117

REASON 変更理由	欧州におけるRoHS規制への対応 Compliance with RoHS in Europe			COMMON MODEL 共通機種	2186-Series
Previous	(2186-1610-01)	□○	□□	(2186-1610-02)	New
Previous	(2089-1621-01)	□○	□□	(2089-1621-02)	New

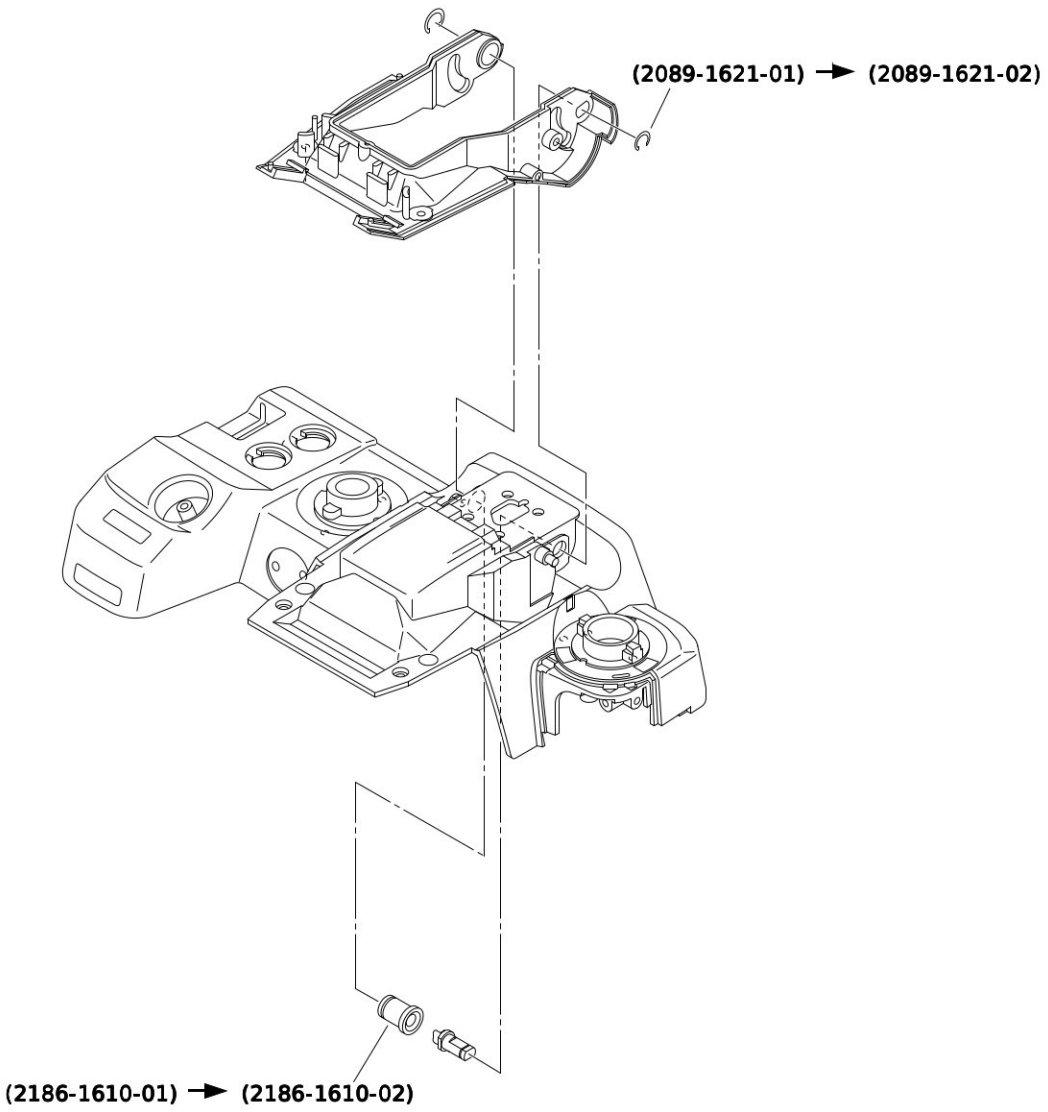

RoHS-compliant product may not be distinguished due to lens material/ processing change.
Please control by parts number.
材料/処理変更により見分けがつかない場合があります。
部品管理No.で管理して下さい。

□本案内状に従い、パーツリストへの転記等、メンテナンスを行なってください。
According to this list, correct □Parts List□ in Service Manual for effective parts management.

KONICA MINOLTA PHOTO IMAGING, INC.

PML