SERVICE INSTRUCTIONS

FILMOSOUND® PROJECTORS

(AUTOLOAD SPECIALIST)

HIGH INTENSITY ARC

DESIGN 566A AND 566X

finer products through imagination

Bell & Howell

PHOTO SALES COMPANY

GENERAL SERVICE DEPT.
7100 N. McCORMICK BLVD.
CHICAGO 45, ILLINOIS

PART NO. 70472 PRINTED IN U.S.A. NOVEMBER 1966

SERVICE INSTRUCTIONS

FILMOSOUND® PROJECTORS

(AUTOLOAD SPECIALIST)

HIGH INTENSITY ARC

DESIGN 566A AND 566X

finer products through imagination

Bell & Howell

PHOTO SALES COMPANY

GENERAL SERVICE DEPT.
7100 N. McCORMICK BLVD.
CHICAGO 45, ILLINOIS

PART NO. 70472 PRINTED IN U.S.A. NOVEMBER 1966

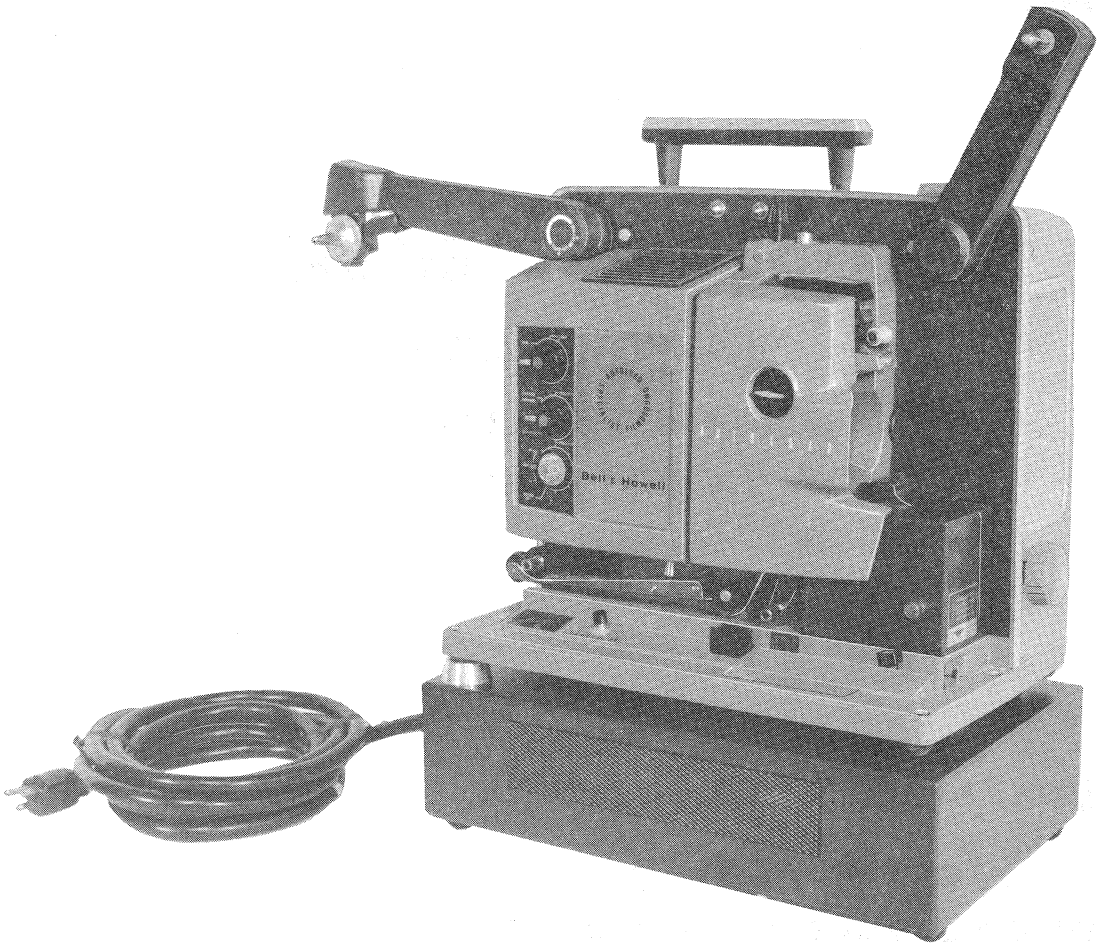

Design 566 Automatic Threading Filmosound Projector High Intensity Arc

FEATURE DESCRIPTION LIST

PROJECTION CONTROL	Forward, Reverse, Thread, Project
LAMP CONTROL	Off - Fan - Lamp
SPEED	Sound 24 FPS
CHANGEOVER SYSTEM	Switch activated with cables Interconnecting 2 Projectors
AUTOMATIC LOOP RESTORER	Roller, cam activated
FRAMER (TYPE)	Screw type fixed axis
DOUSER CONTROL	Automatic operated Opaque douser for changeover
PROJECTION LAMP	G.E. Marc 300 enclosed arc lamp
EXCITER LAMP, SIZE & TYPE	BAK, 4 volt
PROJECTION LENS	2", f/1.4 Straw Coated, Super Proval
AUTOMATIC THREADING	Stainless Steel Loopformers, Self Latching
CORD TYPE 566A	3 Conductor with 2 Blade and Ground Pin Plug
CORD TYPE 566X	Same as 566A, including 3 Conductor Cord Adapter Only
SHUTTER	Rotating 2 Blade
OPERATING VOLTAGE 566A	105-129 volt A.C. 60 cycles
OPERATING VOLTAGE 566X	105-129 volt A.C. 50 cycles
MAIN DRIVE MOTOR 566A	Heavy Duty Capacitor Start Induction Run 3450 R.P.M. 117 v. A.C. 60 cycle
MAIN DRIVE MOTOR 566X	Heavy Duty Capacitor Start Induction Run 2850 R.P.M. 115 v. A.C. 50 cycle
VENTILATION MOTOR 566A	Shaded Pole 117 v. A.C. 60 cycle
VENTILATION MOTOR 566X	Shaded Pole 117 v. A.C. 50 cycle
LAMP SUPPLY UNIT	Auxiliary aluminum cased unit containing lamp power supply components, cable connected to projector.
FILM TRIMMER	Built-in Base
TILT FOOT	Rack & Pinion
SHUTTLE	Three Teeth, Stellite
CASE	Fiber Glass with Metal Trim
AMPLIFIER TYPE	A.C. Transformer Type Power Supply with Silicon Diode bridge Rectifier.
AMPLIFIER POWER OUTPUT	10 watt Continuous
AMPLIFIER CONTROLS	On-Off, Volume, Tone
SPEAKER TYPE	4" x 6" P.M., 8 Ohm
SPEAKER OUTPUT JACK	8 Ohm
EXCITER LAMP SUPPLY	RF Oscillator 120 KC
PHOTO ELECTRIC CELL	Silicon
AMPLIFIER OVERLOAD PROTECTION	Resettable Circuit Breaker
TUBE COMPLEMENT	1-12AX7; 2-6GW8; 1-2N2613; 1-6AQ5

Introduction

GENERAL.

This manual has been prepared to aid in servicing the Bell & Howell Design 566 Filmosound Automatic Threading 16-mm motion picture projector. An illustrated Parts Catalog is included at the rear of the manual to identify replacement parts and to aid the serviceman in the disassembly and reassembly of the projector.

All parts in Parts Catalog illustrations are indexed, as much as possible, in a suggested order of disassembly, and with attaching parts immediately preceding those parts which they attach. Where disassembly and reassembly procedures are quite obvious, no attempt has been made to elaborate on removal or installation instructions. When making specific projector repairs and replacements, the serviceman must use his own judgement in eliminating unnessessary steps of procedure.

The parts book identifies model 566 (60 cycle units) from the 566X (50 cycle units), by means of the usable on code. When components are usable in both units, no code is called out. When components are usable only on 566A models, Code "A" is called out. When components are usable only on 566X models, Code "B" is called out.

Before proceeding with repairs, refer to Trouble Shooting guide for possible causes and remedies of specific customer complaints.

MARC-300 PROJECTION LAMP.

The heart of the MARC-300 system is a tiny 300 watt quartz bodied arc lamp. The basic arc tube is permanently mounted within a precisely contoured optical glass reflector with a heat reducing dichroic coating.

The lamp supply unit specifically designed to use with the MARC-300 lamps, is a high efficiency supply unit that draws approximately 400 watts from the line. Although this wattage is considerably less than the 1000 to 1200 watts sometimes used in 16 mm projection, the high efficiency of the MARC-300 lamp gives brightness on the screen as much as four times as great. Since the arc tube is made of quartz, it should not be touched with bare hands. The normal secretions of the skin are capable of leaving residue on the clear outer quartz surface. This residue can, when heated. cause a cloudy light obscuring phenomenon that reduces useful lamp light and life. The use of clean tissue or cellophane is recommended.

One slight inconvenience, common to the MARC-300 at this time is the need for a short warm up period. Approximately 45 seconds after lamp starting, the light output of the lamp will reach a brilliant white color suitable for viewing. The only other main inconvenience can result from interruption of line current during film showing. Such an inconvenience will cause the lamp to go out and the projector to stop running. In this case, after restoration of normal power, a period of approximately 30 seconds is required before the unit will restart.

NOTICE

1. This lamp is a high intensity arc type intended for use in equipment which incorporates a special electrical supply unit and will not operate from ordinary outlets.
2. Be sure power is off when replacing lamp. Insert lamp plug into receptacle gently but fully. Follow instructions of the equipment manufacturer for proper installation.
3. For best results, neither the quartz arc tube nor the reflector coating should be handled. Finger prints or other contamination may upset the normal lamp operating cycle, causing shortened life or premature reduction in light output.
4. This lamp should not be operated for periods of less than three minutes. Short duration operating cycles will reduce life and degrade performance.

POWER SUPPLY SERIAL NUMBERS.

A nameplate is used on the power supply. Serial numbers that determine production lots are arranged in the following manner:

Serial numbers consist of two letters and three digits. The first letter indicates the month, and the second letter indicates the year. The three digits are the identification of the units built that month.

The year 1966 is designated as year "B". Months are designated starting with "A" for January, but eliminating the letter "I". The year 1966 bears serial numbers as follows:

January 1966	AB 001 to AB 999
February 1966	BB 001 to BB 999
March 1966	CB 001 to CB 999
April 1966	DB 001 to DB 999
May 1966	EB 001 to EB 999
June 1966	FB 001 to FB 999
July 1966	GB 001 to GB 999
August 1966	HB 001 to HB 999
September 1966	JB 001 to JB 999
October 1966	KB 001 to KB 999
November 1966	LB 001 to LB 999
December 1966	MB 001 to MB 999

For 1967 the serial numbers begin with AC 001 where C indicates the year 1967. For 1968 the serial numbers will being with AD 001 where D indicates the year 1968.

Cleaning and Lubrication

1. CLEANING.

All film path areas must be kept free from emulsion build-up, or film jamming will take place during the automatic threading operation. Use Toluol, and/or an orange stick to remove emulsion from film path areas, being careful not to scratch the surfaces. Pay particular attention to the soundhead cover around the soundhead.

Do not use Trichlorethylene solvents to clean plastic parts. Use a naphtha base cleaning fluid and be sure that grease is NOT wiped off critical areas of lubrication. Do not use solvents on these critical areas, especially in the auto-threading linkage, since lubrication is applied during assembly and it would be difficult to replace without disassembling the linkage. Use a soft lint-free cloth when necessary to remove any accumulation of dust or film chips.

During periodic maintenance of the projector, the transport mechanism should be removed and cleaned thoroughly. Brush or blow out all large particles of dirt. Wash all moving parts except "Oilite" bearings with any good petroleum solvent. Wash "Oilite" bearings and the pull-down cams with naphtha. Wash the cam oilers in naphtha, and replace if not thoroughly cleaned by washing. Discard and replace the cam wiper and cam wiper wick. As soon as parts have been washed and dried, coat with a light film of the specified lubricant.

2. LUBRICATION.

a. GENERAL. Unless otherwise specified, apply one or two drops of oil (Spec. 1705) to all shafts, sleeve bearings and sliding parts before assembly. Place felt pads in a shallow container of specified oil or grease until saturated; then allow to drain before installation.

b. LUBRICATION OF SPECIFIC PARTS. See the following table for lubrication of specific parts and lubricant to be used.

LUBRICATION CHART

PART NUMBER	LUBRICANT	PARTS TO BE LUBRICATED
	Grease, Spec. 1986	1. Face of ratchet and drive sprocket
08963	Oil, Spec. 341	1. Bearing surfaces of reel arm shafts 2. Clutch ball retainers 3. Sprocket shafts
04978	Oil, Spec. 1543	1. Framer shaft 2. Bearing face of worm gear 3. Pin of rewind sprocket
070031	Grease, Spec. 1553	1. Slots in bearing assembly
070033	Oil, Spec. 1918	1. Non-bearing machined surfaces of all castings
070032	Oil, Spec. 1705	1. All shafts, sleeve bearings and sliding parts (unless otherwise specified)
070034	Grease, Spec. 1956	1. Tilt rack and pinions 2. Meshing gears in reel arms 3. Reel arm release mechanisms 4. Friction surface of lamp release ring 5. In-out cam and cam follower 6. Shuttle link bearings 7. G.A. Shuttle guide shoe slots 8. All nylon gears 9. Cam wiper and wick 10. Pivot posts for all film guides 11. Upper and lower sprocket bearings 12. Shuttle guide and guide bearings 13. Loop restorer and self-centering assembly

LUBRICATION CHART (CONT)

PART NUMBER	LUBRICANT	PARTS TO BE LUBRICATED
070034 (Cont)		14. Pin of take-up drive sprocket assembly 15. Threads of frame shaft 16. All diameters of cam shaft bearing holes in mechanism 17. Teeth of focus knob pinion 18. Framer shaft assembly - threads and pilot dia of shortest groove 19. Between wiper and up and down cam 20. Loop restoring cam 21. Retracting lever on pressure plate of lens carrier 22. Teeth of crown gears 23. Reel arm lock plunger 24. Belt shaft stop bracket and rod

Special Service Tools

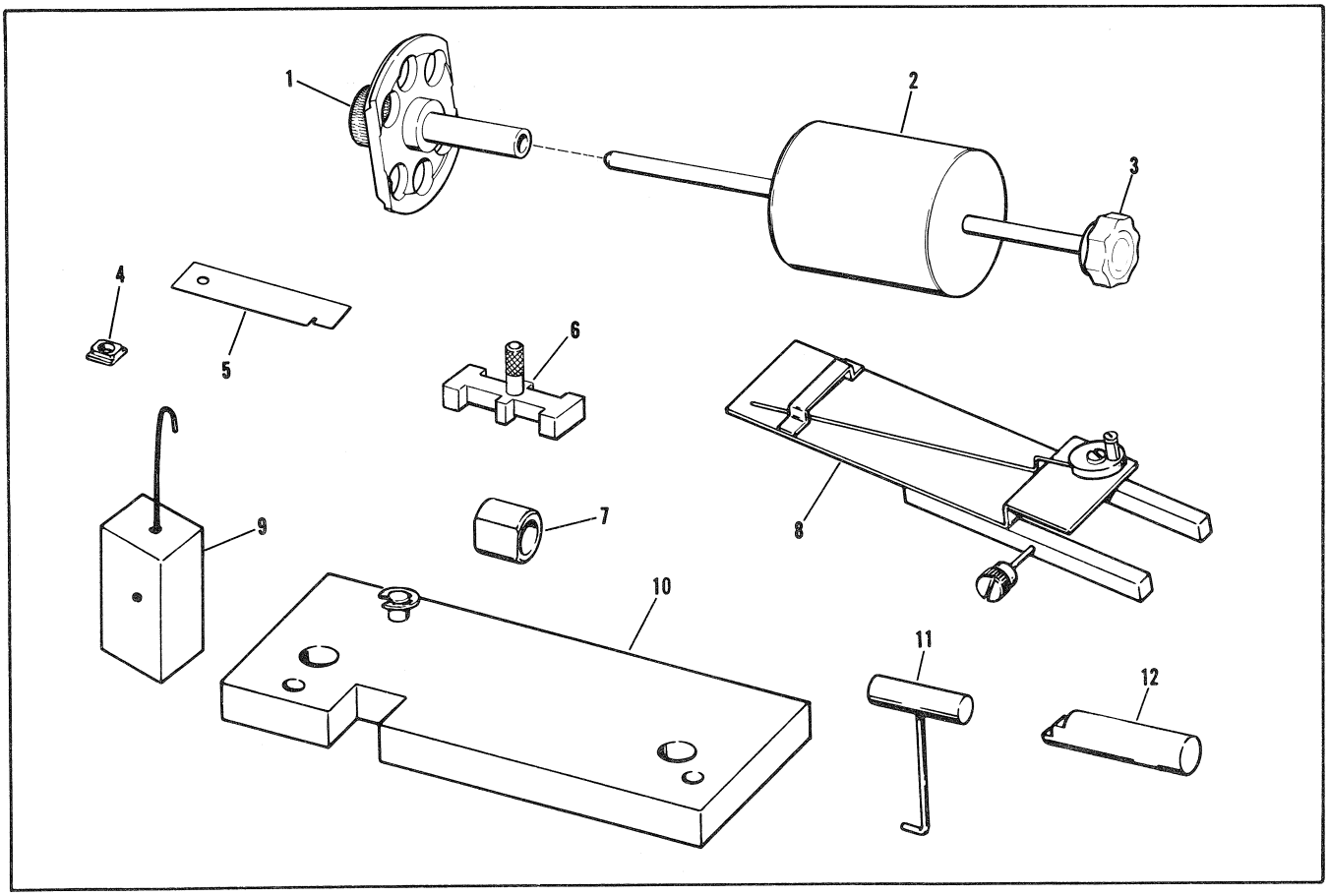

Figure A. Special Service Tools

INDEX NO.	TOOL NO.	NOMENCLATURE	TOOL APPLICATION
1	SER-556-1-N1	Lamp Bracket Setting Gage	
2	SER-550-2-N1	Lens Plug	Alignment of optical system and lamp bracket (see Figure B)
3	SER-550-2-N2	Alignment Rod	
4	SER-550-2-N3	Aperture Plug	
5	SER-550-5-N2	Stroke Gage	Measure shuttle stroke
6	SER-09701-35-N2	Shuttle Height Gage	Check shuttle protrusion
7	SER-552-2-N1	Restorer Positioning Tool	Adjusting the loop restorer
8	SER-552-4-N1	Shuttle Tension Gage	Shuttle tension (see Figure C)
9	SER-552-4-N2	Weight for Item 8	Shuttle tension (see Figure C)
10	SER-552-1-N1	Timing and Alignment Plate	Timing the sprockets
11	SER-552-5-N1	Soundhead Locating Gage	Positioning the soundhead
12	SER-550-8-N1	Alignment Tool	Sound drum and photocell alignment (see Figure E)
	SER-550-5-N1	Shuttle Stroke Target	Measurement of shuttle stroke (see Figure D)

ADDITIONAL EQUIPMENT - NOT ILLUSTRATED

APPLICATION	EQUIPMENT
1. To check speed over allowable voltage range.	1. Strobatac or equivalent. 2. 400 feet of film 3. 105-129 VAC voltage source 4. Variac with meter 5. AC Ammeter 0-20 Ampere
2. To check amplifier operation	1. External speaker 2. Film - Test 3. Oscilloscope

Trouble Shooting

3. MISCELLANEOUS TROUBLES AND REMEDIES.

TROUBLE	PROBABLE CAUSE	REMEDY
Nothing runs	1. Protective interlock switch not operating.	1. Use correct screw (P/N 36052) in in lower left rear corner of case. Replace switch.
	2. Damaged power cable from line to lamp power supply.	2. Repair or replace cable.
	3. Loose connections.	3. Repair.
	4. Damaged power cable from lamp power supply to projector.	4. Repair or replace cable.
	5. Power supply fuse blown.	5. Replace fuse.
	6. Changeover and latching interlock switches out of adjustment.	6. Readjust switches, see (paragraph 49).
Motor hums but does not run	1. Starting circuit open or shorted.	1. Repair loose or transposed connections.
	2. Faulty starting capacitor or starting relay.	2. Replace starting capacitor or starting relay.
Motor runs but mechanism does not run	1. Drive belt off of pulley.	1. Reinstall belt.
	2. Motor or driven pulley loose on shaft.	2. Position pulley and tighten setscrews.
	3. Damaged belt.	3. Replace belt.
Rewind does not operate	1. Rewind clutch not engaging.	1. Adjust (paragraph 50c).
	2. Rewind clutch slipping.	2. Adjust (paragraph 50c).
Feed spindle does not revolve in reverse	1. Dirt in feed spindle clutch.	1. Clean.
Gate will not lock	1. Latch spring set too close to lens mount stop.	1. Adjust latch spring.
	2. Pressure shoe out of line.	2. Realign pressure shoe.
Take-up does not operate	1. Belt (15, Figure 3) slipping or badly worn.	1. Clean pulley (3) and sleeve (30), Figure 10; replace belt.
	2. Teeth on sprocket (19A, Figure 3) worn, so that clutch slips.	2. Replace sprocket.
	3. Gears in reel arm not aligned.	3. Adjust per paragraph 50b.

3. MISCELLANEOUS TROUBLES AND REMEDIES (CONT)

TROUBLE	PROBABLE CAUSE	REMEDY
Projector lamp does not light - projector runs	1. Recycle attempted too soon.	1. Wait one full minute before attempting restart.
	2. Suspected lamp failure.	2. Observe the following procedure: a. Try a second lamp to isolate trouble to lamp or supply. b. If second lamp does not light, remove wall outlet power cord and check power supply fuses. c. Any lamp supply unit fuse failure which cannot be obviously accounted for should put the lamp supply unit in question. POWER SUPPLY SHOULD BE RETURNED TO FACTORY.
Speed is slow	1. Binding in mechanism.	1. Free binding condition.
	2. Slipping belt.	2. Clean or replace.
	3. Pulleys out of line.	3. Realign.
	4. Power line frequency other than 60 cycles. (566A)	4. Use proper voltage and frequency.
System locks when actuator is depressed	1. Linkage screws at rear of mechanism loose.	1. Reset linkage and tighten screws (see Adjustments). Paragraph 55
	2. Eccentric pivot (11, Figure 15) improperly aligned.	2. Readjust pivot (paragraph 55).
	3. Wear between locking lever (12) and film guide (23), Figure 15.	3. Replace worn parts.
Change-over does not operate	1. Change-over cable not connected.	1. Connect cable plugs.
	2. Broken cable leads.	2. Repair leads or replace cable.
	3. Loose plugs.	3. Tighten plugs.

4. PICTURE TROUBLES AND REMEDIES.

TROUBLE	PROBABLE CAUSE	REMEDY
Film jump	1. Damaged film.	1. Replace or repair.
	2. Loose shuttle.	2. Adjust and tighten (paragraph 46)
	3. Dirty gate.	3. Clean gate.
	4. Damaged or lost pressure shoe spring.	4. Replace spring.
	5. Pressure shoe misaligned.	5. Realign.
	6. Incorrect shuttle stroke.	6. Adjust (paragraph 46d).
Double image	1. Incorrect shuttle stroke.	1. Adjust (paragraph 46d).
	2. Excessive shuttle protrusion.	2. Adjust (paragraph 46b).
Weave	1. Sticking edge guide.	1. Clean guide.
	2. Side tension spring lost.	2. Replace spring.
	3. Fixed edge guide out of position.	3. Reposition.
Poor illumination	1. Arc tube or reflector contaminated.	1. Replace lamp (Do not touch lamps, reflector or arc tube with bare hands).
	2. Optics out of line.	2. Realign (paragraph 45).
Poor focus	1. Dirty lens or aperture.	1. Clean lens or aperture.
	2. Warped film.	2. Recondition or replace.
	3. Projector lens mount out of line.	3. Realign (paragraph 47).
	4. Pressure shoe spring lost.	4. Replace spring.
	5. Bent pressure shoe.	5. Replace shoe.
	6. Pressure shoe out of line.	6. Realign.
Frame line creeps	1. Framer eccentric loose.	1. Align and tighten (paragraph 46e).
Insufficient framing	1. Framer eccentric out of adjustment.	1. Adjust (paragraph 46e).
Trailer ghost	1. Shutter out of time.	1. Reassemble properly.

5. FILM TRANSPORT TROUBLES AND REMEDIES.

TROUBLE	PROBABLE CAUSE	REMEDY
Loss of loops	1. Damaged film.	1. Repair or replace.
	2. Inadequate shuttle protrusion.	2. Adjust (paragraph 46b).
	3. Inadequate or excessive shuttle stroke.	3. Adjust (paragraph 46d).
	4. Pressure shoe spring lost.	4. Replace spring.
	5. Pressure shoe mounting plate screws loose.	5. Tighten screws.
	6. Sprocket shoe locks not closing.	6. Clean or adjust.
	7. Sprocket drive gear loose on shaft.	7. Retime and tighten.
	8. In-out bracket spring broken.	8. Replace spring.
Lower loop not restored	1. Loop restorer stroke too short.	1. Adjust (paragraph 56).
	2. Loop restorer does not engage restorer cam.	2. Adjust (paragraph 56).
Film rubs on loop restorer roller	1. Restorer arm out of position.	1. Reposition (paragraph 56).
Excessive film slap	1. Damaged film.	1. Recondition or replace.
	2. Green film.	2. Age or buff.
	3. Dirty gate.	3. Clean gate.
	4. Pressure shoe rubbing on edge guides.	4. Realign.
	5. Incorrect shuttle stroke.	5. Adjust (paragraph 46d).
Splices jam in sprocket shoes	1. Bad splices.	1. Replace.
	2. Emulsion build-up.	2. Clean (paragraph 1).

6. SOUND SYSTEM TROUBLES AND REMEDIES.

TROUBLE	PROBABLE CAUSE	REMEDY
Projector runs, tubes do not light	1. Loose connection.	1. Repair connection.
	2. Tube burned out.	2. Replace tube.
	3. Amplifier switch damaged.	3. Replace switch.
	4. Heater series resistor open.	4. Replace resistor.
Tubes light, exciter does not light	1. Exciter lamp cable disconnected.	1. Connect cable.
	2. Wrong exciter lamp used.	2. Replace with correct lamp.
	3. Damaged oscillator tube.	3. Replace tube.
	4. Projector switch open or leads disconnected.	4. Replace switch or connect leads.
Tubes and exciter light, but no sound	1. Speaker jack disconnected.	1. Connect leads.
	2. Speaker jack switch open.	2. Repair or replace jack.
	3. Photocell cable disconnected.	3. Connect cable.
	4. Photocell cable leads reversed.	4. Connect to proper terminals.
	5. Damaged tubes.	5. Replace tubes.
	6. Photocell out of line.	6. Realign (paragraph 51b).
	7. Dirt on end of photocell.	7. Remove dirt.
	8. Wrong exciter lamp used.	8. Replace with correct lamp.
Low volume	1. Damaged tubes.	1. Replace tubes.
	2. Wrong exciter lamp used.	2. Replace with correct lamp.
	3. Photocell out of line.	3. Realign (paragraph 51b).
	4. Dirt on photocell or slit.	4. Remove dirt.
	5. Slit misaligned.	5. Realign (paragraph 51d).
	6. Buzz track misaligned.	6. Realign (paragraph 51e).
Distortion at all volume levels	1. Wrong exciter lamp used.	1. Replace with correct lamp.
	2. Inverter or output tubes damaged.	2. Replace tubes.
	3. Open element in one output tube.	3. Replace tube.
Crackling noises	1. Damaged tubes.	1. Replace tubes.
	2. Broken ground lead to mechanism or blower housing.	2. Repair lead.
	3. Grounding springs loose, bent or lost.	3. Repair or replace springs.

6. SOUND SYSTEM TROUBLES AND REMEDIES. (CONT)

TROUBLE	PROBABLE CAUSE	REMEDY
Crackling noises (cont)	4. Buzz track out of line.	4. Realign (paragraph 51e).
	5. Broken cable shield.	5. Repair shield.
Wow or flutter	1. Stabilizer guide roller sticking.	1. Clean roller.
	2. Stabilizer guide roller spring broken, unhooked or lost.	2. Repair or replace spring.
	3. Film edge guide (soundhead) out of line.	3. Realign (paragraph 51e).
	4. Loose flywheel.	4. Tighten flywheel.
	5. Damaged sound drum bearing.	5. Replace bearing.
	6. Dirt causing guide roller arm pivot bearing to bind.	6. Clean and polish.
	7. Photocell or exciter cable rubbing against flywheel.	7. Reposition.
	8. Chip or dirt in take-up sprocket gear teeth.	8. Remove chip or dirt.
	9. Loop restorer stroke is too short or restorer set too low.	9. Adjust (paragraph 56).
Clicking noise	1. Dirt on sound drum.	1. Clean sound drum.
	2. Broken ground lead to mechanism or blower housing.	2. Repair lead.
	3. Sound drum grounding spring loose, bent or lost.	3. Repair or replace spring.
High frequencies fade (jumps focus)	1. Warped film.	1. Recondition or replace.
	2. Film edge guide (soundhead) out of line.	2. Realign (paragraph 51e).
	3. Dirt on sound drum.	3. Clean sound drum.
Hum	1. Tube shield lost.	1. Replace tube shield.
	2. Screws holding amplifier base shield to PC board loose or lost.	2. Tighten or replace screws.
	3. Frame by-pass condenser open or disconnected.	3. Replace or repair condenser.
	4. Amplifier not at same potential as test equipment (TEST CONDITION).	4. Operate amplifier from isolation transformer.
	5. Grounded wiring.	5. Correct grounded condition.

7. TROUBLE SHOOTING THE AUTOLOAD SYSTEM.

a. GENERAL. Any obstruction in the film path, such as caked emulsion, film chips or splicing tape, can be expected to interfere with proper threading. Time will be saved by cleaning the threading path and, at the same time, making a visual inspection of all shoes and guides before attempting to localize the trouble. Do not use metal tools to remove material adhering to the guides or rollers. Use an orange stick, plastic rod or toothpick whenever scraping is necessary. Pipe cleaners dampened with tuoluol, naphtha or isopropyl-alcohol are very convenient for cleaning in restricted areas. Do not use trichlorethylene or carbon tetrachloride as cleaning solvents as they might damage or stain plastic parts. Do not use excessive amounts of solvents, or lubricants will be removed from linkage pivots, slides, etc., and will have to be replenished.

b. TEST FILM. The autoload system has been designed to function properly with all films which can be described as being in projectable condition (see Operators Instructions for limits of shrinkage, curl, etc.). Generally, any film which functions properly in other Bell & Howell projectors (such as Designs 399, 540 and 542) can be used for testing the autoload system. Any film which does not thread properly should be inspected. The end of the leader must be properly trimmed and free from sharp bends. All sprocket holes in the first 18-inches of leader must be in good condition. Splices must be properly registered and in good condition. Sprocket holes restricted by cement or splicing tape must be cleared or the splice remade. The repairman is cautioned that it would be a waste of time to adjust or attempt to adjust the autoload system to auto-thread a film which is in such poor condition as to be incapable of being the source of an uninterrupted film presentation of acceptable quality.

c. AUTOLOAD TROUBLE SHOOTING CHART.

TROUBLE	PROBABLE CAUSE	REMEDY
Film cannot be inserted into feed sprocket	1. Obstruction in film channel of sprocket guard.	1. Remove obstruction.
	2. Guide finger on channel (3, Figure 18) bent or binding.	2. Straighten or replace arm.
	3. Excessive pressure on leaf spring (30, Figure 15).	3. Adjust leaf spring (paragraph 55j).
Film will not pull between feed sprocket and sprocket shoe	1. Entrance guide (11, Figure F) mis-aligned.	1. Realign per paragraph 55h.
	2. Feed sprocket shoe sticking.	2. Clean sprocket shoe pivot.
	3. Feed sprocket shoe spring (31, Figure 14) broken.	3. Replace spring.
	4. Caked emulsion or burr on sprocket shoe film rails.	4. Clean; remove burr with crocus cloth.
Film comes out the side of top sprocket	1. Obstruction in sprocket shoe.	1. Remove obstruction.
	2. Damaged sprocket shoe.	2. Replace sprocket shoe.
	3. Sprocket shoe and sprocket mis-aligned laterally.	3. Realign.
Film strikes top of aperture plate and begins to pile up	1. Upper loop former (8, Figure G) bent or out of adjustment.	1. Straighten or replace if bent; or readjust per paragraph 55e.
	2. Lower loop former (4, Figure G) set too close to aperture plate.	2. Readjust per paragraph 55c.

7. TROUBLE SHOOTING THE AUTOLOAD SYSTEM. (CONT)

TROUBLE	PROBABLE CAUSE	REMEDY
Film butts into or goes under top end of aperture plate side tension rail or strikes fixed rail	1. Upper loop former (8, Figure G) bent, causing sidewise deflection of film.	1. Straighten or replace.
	2. Lower loop former (4, Figure G) bent or out of adjustment.	2. Straighten or replace if bent, or readjust per paragraph 55c.
Film butts into top of film pressure plate (7, Figure 15) or passes over outside of pressure plate	1. Lower loop former (4, Figure G) out of adjustment.	1. Readjust per paragraph 55c.
	2. Pressure shoe not lifting off of aperture plate when film gate is closed.	2. Bent parts need straightening (paragraph 55g) or replacing.
Film ejects between bottom of gate and top of take-up sprocket, or piles up in this area	1. Lower loop form (15, Figure 15) bent or sticking.	1. Straighten, remove bind, or replace as necessary.
	2. Lower loop form spring (12, Figure 15) broken.	2. Replace spring.
	3. Loop restorer out of adjustment or restorer roller stud bent.	3. Readjust loop restorer (paragraph 56); replaced damaged parts.
	4. Obstruction or burr in take-up sprocket upper shoe.	4. Clean; remove burr with crocus cloth.
	5. Sprockets out of time.	5. Time sprockets per paragraph 57.
Film not threading over take-up sprocket	1. Sprocket guard mounting plate (25, Figure 15) out of position.	1. Reposition per paragraph 55b.
	2. Obstruction in upper sprocket shoe.	2. Remove obstruction.
	3. Sprocket shoe spring (31, Figure 14) broken.	3. Replace spring.
	4. Take-up sprocket shaft loose in gear (33, Figure 14).	4. Retime sprockets (paragraph 57) and tighten setscrews (32, Figure 14).
Film piles up ahead of sound drum	1. Insufficient clearance between soundhead threading guides (4 and 5, Figure H).	1. Readjust all guides per paragraph 55.
	2. Backup bracket (20, Figure 15) bent downward.	2. Straighten bracket.
	3. Exciter lamp cover loose.	3. Tighten cover retaining screw.
	4. Obstruction in gap between sound drum and exciter lamp cover.	4. Remove obstruction.
	5. Not enough clearance between sound drum and cover.	5. Check clearance per paragraph 59.
	6. Edge guide adjusting screw (26, Figure 11) out too far.	6. Adjust per paragraph 51e.

7. TROUBLE SHOOTING THE AUTOLOAD SYSTEM. (CONT)

TROUBLE	PROBABLE CAUSE	REMEDY
Film ejects ahead of lower take-up sprocket shoe or piles up in this area	1. Insufficient clearance between soundhead threading guides (4 and 5, Figure H).	1. Readjust all guides per paragraph 55.
	2. Soundhead loose or improperly positioned.	2. Reposition per paragraph 58.
	3. Obstruction or burr in lower take-up sprocket shoe.	3. Remove obstruction; remove burr with crocus cloth.
	4. Film guide (7, Figure 11) improperly positioned.	4. Reposition guide.
Film sticks in or is ejected from lower take-up sprocket shoe	1. Obstruction or burr in lower take-up sprocket shoe.	1. Remove obstruction; remove burr with crocus cloth.
	2. Sprocket shoe sticking.	2. Clean sprocket shoe pivot.
	3. Broken sprocket shoe spring (31, Figure 14).	3. Replace spring.
	4. Sprocket shoe and sprocket mis-aligned laterally.	4. Realign.
	5. Film exit guide (7, Figure 15) bent or improperly positioned.	5. Reposition or straighten guide.
Film piles up ahead of idler roller (6, Figure 11) or is ejected from this area	1. Film exit guide (7, Figure 15) bent or improperly positioned.	1. Reposition or straighten guide.
	2. Idler roller sticking or roller stud loose or bent.	2. Remedy sticking condition; relocking lever (12, Figure 15).
System will not lock	1. Locking lever (12, Figure 15) binding.	1. Repair or replace lever.
	2. Release spring (18, Figure 15) disengaged or broken.	2. Engage spring with locking lever, or replace spring.
	3. Eccentric pivot (11, Figure 15) improperly adjusted.	3. Readjust pivot per paragraph 55i.
Loop restorer cycles continuously	1. Restorer out of adjustment.	1. Adjustment per paragraph 56.
	2. Shuttle retractor pin (43, Figure 17) sticking.	2. Clean and lubricate pin.
	3. Pressure plate (7, Figure 19) binding on aperture plate edge guide.	3. Realign pressure plate.
Slack film in soundhead area	1. Sprocket shoes sticking.	1. Clean sprocket shoe pivots.
	2. Take-up jerking.	2. Check take-up torque and check for binding in take-up reel arm.
	3. Jockey rollers sticking.	3. Clean and lubricate.
	4. Soundhead improperly positioned.	4. Reposition per paragraph 58.
	5. Dirt or obstruction between sound drum and exciter lamp cover.	5. Remove obstruction.

7. TROUBLE SHOOTING THE AUTOLOAD SYSTEM. (CONT)

TROUBLE	PROBABLE CAUSE	REMEDY
Film scratches	1. Caked emulsion on film path parts.	1. Clean film path.
	2. Film chips in sprocket shoes.	2. Remove film chips.
	3. Scratches or burrs on film guides, shoes, aperture or pressure plate.	3. Polish with chrocus cloth or replace.
	4. Jockey rollers sticking.	4. Clean and lubricate.
Perforations checked	1. Shuttle not retracting.	1. Adjust per paragraph 55f.
	2. Pressure plate not lifting from aperture plate.	2. Adjust per paragraph 55g.
	3. Excessive feed or take-up tension.	3. Adjust tension.
Film dimpled between perforations.	1. Sprocket shoes sticking.	1. Clean sprocket shoe pivots.
	2. Shuttle not retracting.	2. Adjust per paragraph 55f.
	3. Sprockets out of time.	3. Retime per paragraph 57.
	4. Inadequate pressure on leaf spring (30, Figure 15).	4. Adjust per paragraph 55j.
	5. End of film leader not cut clean and square.	5. Check film cutter; replace if dull or broken.
Film escape mechanism does not open to permit exit of film	1. Film exit latching is out of adjustment.	1. Readjust per paragraph 55d.
Film escape locking pawl does not seat properly; film exits constantly	1. Torsion spring (9, Figure 16) disconnected.	1. Connect torsion spring.
	2. Locking pawl (11, Figure 16) out of adjustment.	2. Readjust locking pawl per paragraph 55d.

Disassembly Procedure

8. GENERAL INSTRUCTIONS.

a. When removing the riveted parts for replacement, the old rivet must be drilled out with a drill equal to, or slightly smaller than, the diameter of the rivet to be installed.

b. When signal tracing and troubleshooting indicate that replacement of electrical parts is necessary, make a note of leadwire connections and, in addition, refer to the wiring diagrams (Figures 21 to 24) to insure proper parts installation.

9. DISASSEMBLING FIGURE 1 PARTS.

CAUTION

No attempt should be made to disassemble the power supply unit. The unit should be returned to Bell and Howell for any servicing other than fuse replacement.

10. DISASSEMBLING FIGURE 2 PARTS.

Caution should be exercised in bending tabs on parts 1 and 2 in order to avoid crystalization and breakage.

11. DISASSEMBLING FIGURE 3 PARTS.

Remove parts, as necessary, in their indexed order of disassembly. When disassembling the reel arms from the projector, make a mental note of the manner in which the clutch and sprocket parts (16 through 27) are assembled so that they can be reassembled in the same way.

12. DISASSEMBLING FIGURE 4 PARTS.

When removing the changeover switch (20) and lamp connector (9) note the manner in which the leadwires are connected.

CAUTION

When removing lamp (28) make sure that quartz arc and reflecting surface are not touched. Wrap carefully in Tissue or lint-free cloth for protection.

13. DISASSEMBLING FIGURE 5 PARTS.

Remove parts, as necessary, in their indexed order of disassembly noting the following special precautions.

a. When removing the speaker (4), starting capacitor (9), motor relay (12), or motor (30), note the manner in which leadwires are connected.

b. For proper motor relay (12) replacement, refer to the inset in Figure 5 for the type of relay used in your projector. Identify the motor by checking the nameplate for manufacturer and part number.

14. DISASSEMBLING FIGURE 6 PARTS.

Remove parts, as necessary, in their indexed order of disassembly, noting the following special procedures.

a. When removing relay (5) receptacles (7 and 8), solenoid (12) and switches (17) note the manner in which lead wires are connected.

b. Note how clevis rod (9) and spring (13) are attached.

15. DISASSEMBLING FIGURE 7 PARTS.

Insert a 1/16-inch punch through hole in sound drum shaft housing and into the hole in shaft. Hold the shaft firmly while loosening flywheel nut (5).

16. DISASSEMBLING FIGURE 8 PARTS.

Remove parts, as necessary, in their indexed order of disassembly, noting the manner in which lead wires are connected.

17. DISASSEMBLING FRONT REEL ARM. (Figure 9)

Remove Figure 9 parts, as necessary, in their indexed order of disassembly, noting the following special precautions.

a. Be careful not to damage the teeth of nylon gears (25 and 26) during disassembly.

b. Unless necessary for replacement, the needle bearings (35A), (39A) and (39B) should not be pressed out.

18. DISASSEMBLING REAR REEL ARM. (Figure 10)

Remove Figure 10 parts, as necessary, in their indexed order of disassembly, noting the following precautions.

a. Be careful not to lose springs (1) and (18).

b. Unless necessary for replacement, needle bearings (5A) and (29A) should not be pressed out.

c. Be careful not to damage the teeth of nylon gears (11) and (12) during disassembly.

19. DISASSEMBLING SOUNDHEAD. (Figure 11)

Remove Figure 11 parts, as necessary, in their indexed order of disassembly, noting the following special precautions.

a. Do not remove optical slit assembly (12) unless in need of replacement or cleaning.

b. Handle the sound drum shaft (21) with care to avoid damage to sound drum. The housing is drilled and tapped to receive two Sems screws (20). Remove these screws and loosen the setscrew (19) to permit withdrawal of the sound drum and shaft assembly, noting the manner in which the photocell (23) and retainer (22) are assembled into the slot in the sound drum shaft.

c. Note the manner in which springs (29) and (35) are engaged before removing the related parts.

d. Remove collar, pin and spring (37A, B and C) only when necessary to replace. The pin shaft is peened to retain the collar and spring.

20. DISASSEMBLING LAMPHOUSE AND BLOWER AND MOTOR ASSEMBLIES.

No special instructions are required to disassemble the lamphouse (Figure 12) or the blower and motor assembly (Figure 13). Refer to the appropriate exploded view and disassemble as necessary for parts replacement. The mounting brackets (9) are riveted to the blower motor on 566A models. On 566X models the brackets are attached with 4 screws (7) and nuts (8).

21. DISASSEMBLING FIGURE 14 PARTS.

Remove parts, as necessary, in their indexed order of disassembly, noting the following special precautions.

a. Pry out hinge pins (1) and (2) with a wire cutter or similar implement to free the lens carrier (5).

b. Remove three screws (11), two retaining rings (12) and clutch lever shaft (13) to free the outboard bearing assembly (14) and rewind clutch lever (15). As the clutch is removed, the rewind button (16) and spring (17) will be released.

c. When removing sprocket guards, (29 and 29A) note carefully the manner in which torsion springs (31) are assembled to apply proper tension to the guards.

d. When sprocket assemblies (35) and (36) are removed, be careful not to damage sprocket teeth.

22. DISASSEMBLING FIGURE 15 PARTS.

Remove parts, as necessary, in their indexed order of disassembly, noting the following special precautions.

a. Before disassembling, make a careful note of the manner in which various springs (7), (12), and (15) are installed. It is important that these springs be reassembled in the same manner.

b. When disassembling note how shafts of link and stud assembly (41) tie auto-thread linkage together.

c. Removal of parts in this illustration will necessitate the readjustment of the auto-threading mechanisms as outlined in paragraph 54.

23. DISASSEMBLING FIGURE 16 PARTS.

Remove parts, as necessary, in their indexed order of disassembly, noting the following special precautions.

a. Before disassembling make careful note of the manner in which various springs (9), (15), and (24) are installed. It is important that these springs be reassembled in the same manner.

b. Loosen setscrews (4) to remove the assembled upper loop form and film escape mechanism parts (5 through 12). Disassemble film escape only if necessary.

24. DISASSEMBLING FIGURE 17 PARTS.

Remove parts, as necessary, in their indexed order of disassembly, noting the following special precautions.

a. Be careful not to bend the blades of the shutter (14) during disassembly.

b. The shuttle link bearings (22A) are secured in place within the notches of the shuttle arms (22) and should not be pressed out. Also, do not remove ball and stud assemblies (17) from shuttle arms (22).

c. Inspect pull-down cam follower (22B) for wear. These followers, or shoes, can be turned end for end or reversed if they appear badly worn. The shuttle arms have followers, or shoes, staked in place and are supplied as assemblies. Replacement of shoes is possible (see instructions in Reassembly Procedure, paragraph 30, step i).

d. The felt wicks (19) and (20) should be replaced with new wicks if they appear unusually dirty. New wicks must be lubricated as directed in paragraph 2.

e. Note that the upper forked end of the shuttle arm plate (28) engages the framer knob shaft (47). Framer knob and shaft unscrew from the casting.

f. Remove retaining ring (30), screws (31) and bearing loading spring (32). Loosen the setscrew (33) in the loop restoring cam (36) and force the bearing (34) from its seat by pressing the camshaft (40) in that direction. With the bearing (34) removed, shift the camshaft (40) to the right to remove.

25. DISASSEMBLING FIGURE 18 PARTS.

Remove parts, as necessary, in their indexed order of disassembly.

26. DISASSEMBLING LENS CARRIER.

Remove Figure 19 parts, as necessary, in their indexed order of disassembly. Wrap the pressure plate (7) in tissue paper to prevent damage to the film contact surface.

27. DISASSEMBLING APERTURE PLATE.

Remove Figure 20 parts, as necessary, in their indexed order of disassembly.

28. AMPLIFIER AND POWER SUPPLY REPAIR.

Replacement parts for the amplifier assembly and the amplifier power supply assembly are identified in Figures 21, 22, 23 and 24. When checking the amplifier, follow standard testing practices and refer to Figure J for location of amplifier test points. Pertinent DC voltages are shown on the amplifier schematic diagram, Figure 25, in the Parts Section.

Reassembly Procedure

29. GENERAL INSTRUCTIONS.

a. When the reassembly procedure includes staking of rivets or similar parts, all staking and riveting should be done in the early stages of reassembly to avoid damage to other parts. Be sure to support the main casting solidly when riveting or staking.

b. Parts which require lubrication are listed in paragraph 2. Lubricate sparingly and wipe away excess lubricant with a clean cloth. Use only the specified Bell & Howell lubricants. During assembly, place a drop of oil in each tapped hole to facilitate screw installation.

c. The following component assemblies require no adjustment and can be reassembled by reversing the disassembly procedure.

Amplifier Power Supply Assembly	Figure 21
Amplifier Assembly	Figure 24
Aperture Plate Assembly	Figure 20
Lens Carrier Assembly	Figure 19
Sprocket Guard Assembly	Figure 18
Lamphouse Assembly	Figure 12

30. REASSEMBLING THE MECHANISM (Figure 17).

a. Press the bearing (34) into mechanism housing. Install bearing (39) onto camshaft until it is seated against the shoulder of the shaft. Install retaining ring (38) onto camshaft with convex side of ring away from bearing (39).

b. Apply a light film of grease to bearing hole in the cast arm of the mechanism housing and insert unthreaded end of camshaft through bearing hole. Install cam (36) and worm gear (37).

c. Insert free end of camshaft into bearing (34) and press camshaft in place until bearing (39) is seated.

d. Secure bearing loading spring (32) with screws (31). Install large retaining ring (30) over camshaft and into groove in housing. The convex side of the retaining ring must be against bearing.

e. Assemble setscrew (35) to the hub of the worm gear. Set clearance of .610" between worm gear and front bearing post of mechanism housing, and tighten the two screws securely. Adjust by setting clearance between cam (36) (part no. 36042) and the cast arm of the mechanism housing at 0.190-inch. Press against cam to hold feeler gage against cast arm, and tighten the setscrew (33) against flat in camshaft. Remove the feeler gage. Screw the rewind adjustment stud (45) down into place so that the top of the stud is approximately 1/16-inch below the surface of the housing.

f. Assemble bearing support (29) to the shuttle arm plate (28) so that the nylon pads face one another. Thread in the support to the full length of its thread. Install the framer knob and shaft (47) so that prongs of shuttle arm plate framing arm can be engaged with groove in framer shaft. Secure plate (28) to cast arm of mechanism housing with screws (27).

g. Assemble the in-out cam (26) to in-out bracket assembly (25) so that the nylon pad of the cam follower (25A) will ride against polished surface of the cam. Install this assembled group over the end of the camshaft and fasten bracket assembly to the mechanism housing with two screws (24).

h. At this point, refer to Figure 16 and install aperture plate (27) with screws (26).

i. Check the ball and stud assemblies (17) to make certain that the locking hex nuts (16) are tightened on each shuttle arm (22). Press the link bearings (22A) into notches at the front of each shuttle arm. If previously removed install the cam followers (22B), burr

side down, into the notched center section of each shuttle arm. (The cam followers are staked in place. If necessary, they can be removed by filing off one of the staked areas and slipping the follower out. A new follower can be inserted. Restaking is unnecessary.) Insert front end of upper shuttle arm between the guides of the bracket assembly (25) until the ball of item (17) rests in the socket of the nylon pad on the shuttle arm plate. Hold temporarily in place with a rubber band. Hang the shuttle (21) in the slot of the shuttle arm so that the shuttle teeth extend through slot in aperture plate and back toward camshaft.

j. Insert front end of lower shuttle arm between the two guides of the bracket assembly (25). Engage the slot of the arm with the shuttle (21) and rest the ball of item (17) in the socket of the nylon pad on the shuttle arm plate. Position the in-out cam (26) so that the tongue on the unpolished side of the cam rests in the slot in the shoulder of the camshaft. Install pull-down cam (23) onto camshaft so that the cam notch fits over the protrusion of the in-out cam (26). Temporarily install the shutter nut (12). Tighten the bearing support (29) just enough to hold all parts securely in place. Then remove the rubber band from around the shuttle arm, and install the felt wiper (19). Install cam wiper wick (20) into extension spring (18) and assemble spring to shuttle arms.

NOTE

At this point, adjust the shuttle as instructed in paragraph 46.

k. Remove the shutter nut (12). Install fiber washer (15) over camshaft and up against the pull-down cam so that the slot in the washer is aligned with the slot in the cam. Assemble the shutter (14) to the camshaft and install counterbalance (13) so that pin of weight enters the slots in shutter and pull-down cam. Install nut (12) so that its shoulder enters center hole in weight (13) and tighten nut securely, holding the end of the camshaft with an open-end wrench.

l. Install heat baffle (10) with washers (11) and screws (9). Install pulley (2) on camshaft and tighten setscrews (1). Attach douser bracket assembly (8) with one screw (7) in lower hole, do not tighten. Slip screws (4) into mounting holes in baffle assembly (5). Place baffle spacers (6) over screws (4), and tighten. Install sems screw (3) through hole in arm of baffle assembly (5) and hole in douser bracket assembly (8) and tighten.

31. REASSEMBLING THE MECHANISM (Figure 16).

a. Install the lens stop screw (31) into the housing casting until only one thread is visible. Attach lens carrier catch (29) and spacer washer (30) to casting with screw (28). Adjust the stopscrew, paragraph 47.

b. Attach self centering assembly (23) with screws (20) and washers (21) and (22). Assemble shaft assembly (19) to casting and install arm (18) on shaft. Maintain clearance of 0.0015-inch between casting and hub of arm (18) while tightening screw (17).

c. Assemble cam follower (16) and fasten to arm (18) with screw (13) and washer (14). Attach spring (15) between hole in casting and shaft of lever assembly (19).

d. Assemble the film escape mechanism parts (5 through 12) engaging bent ends of torsion spring (9) with pawl (11) and the hub assembly (12) so that pawl tends to rotate clockwise. Adjust escape mechanism (paragraph 55d). Assemble the shaft (25) to casting and install the escape mechanism on shaft; then tighten setscrews (4).

32. REASSEMBLING THE MECHANISM (Figure 15).

a. Secure retractor (40) to link (41) with screw (37) and washers (38) and (39). Install plate (36). Assemble lower loop form assembly (34) so loop form shaft passes through guard plate and casting while upper shaft of connecting link (41) passes through holes in lower loop form. Install retaining ring (33) on connecting link stud, and the threading lever (32) on end of loop form shaft. Secure the threading lever with hex head screw (31). Install spring (24, Figure 16) so that it applies return tension to shaft (25, Figure 16).

b. Assemble toggle lever (26) to lower sprocket guard plate (25) with retaining ring (28). Fasten guard plate to casting with screws (24). Install upper film guide (27) so stud on lower arm rides inside slot of toggle lever. Assemble large washer (22), lower film guide (23) and a second large washer (22) over lower bearing protruding through sprocket guard plate (25). Note that the lower shaft of the connecting link (41) passes through the outside slot of toggle lever (26) and a hole in the left ear of the lower film guide. Spring (15) and lower loop form (14) are then installed on this stud and secured with retaining ring (13). Legs of spring (15) must be positioned to apply proper tension to lower loop form. Install large retaining ring (21). Fasten back-up bracket (20) to sprocket guard plate with screw (19).

c. Attach auto-thread locking lever (12) and eccentric pivot (11) to casting with screw (10). Attach release spring (18) and bushing (17) to casting just above and to the left of lever (12), hooking long leg of spring behind rear edge of lever. Install film exit guide (7) with screw (6). Install bracket and handle assembly (4) and spring (5) with retaining ring (3). Install all rollers.

33. REASSEMBLING THE MECHANISM (Figure 14).

a. Install thrust washer (38) over shaft of upper sprocket assembly (35) and insert the sprocket shaft through bearing hole in housing until shaft protrudes about 1/8-inch from rear of housing. Install tension washer (34) and sprocket gear (33), aligning either setscrew (32) with flat on sprocket shaft. Carefully mesh the sprocket gear with the worm gear (36, Figure 17); then slide the shaft through the sprocket gear until sprocket rests against the bearing in the housing. Tighten both setscrews (32). Install the take-up drive sprocket (25) and tighten setscrews (24).

b. Install rewind button (16) and spring (17). Depress the button while assembling the rewind clutch lever (15) to the mechanism. The small forked end engages a groove in the button shaft; the large forked end encircles the sprocket shaft. Install the spline driver (23) on sprocket shaft with the spline fitting through the forked end of the clutch lever and meshing with the drive sprocket (25). Install spring (22), washer (21), retaining rings (19) and rewind drive sprocket (20). Install the timing belt (18) over the rewind drive sprocket (20). Assemble outboard bearing assembly (14) onto the sprocket shaft and install clutch lever shaft (13) and retaining rings (12). Secure outboard bearing assembly to the mechanism housing with three screws (11).

c. Refer to Figure 17 and turn the rewind adjusting stud (44) in or out to obtain 0.010-inch clearance between the rewind clutch lever (15, Figure 14) and the spline driver (23, Figure 14). Then tighten the setscrew (45, Figure 17) securely against the adjusting stud. Remove the paper backing from new rewind nameplate (32, Figure 16) and install nameplate.

d. Assemble flange (37) and thrust washer (38) onto lower sprocket assembly (36) and insert sprocket shaft through bearings in mechanism housing. Install tension washer (34) and sprocket gear (33) onto shaft, meshing teeth of sprocket gear with the worm gear. Tighten setscrews (32) securely so that sprocket shaft turns freely but without noticeable end play.

e. Assemble sprocket guards (29 and 29A), rollers (30) and torsion springs (31) to mechanism with screws (28). Springs must be assembled so that tension tends to hold guards in open position. Attach the sprocket guard assembly (27) with three screws (26) inserted from rear of mechanism plate. Install actuating assembly (7) on protruding shaft and link assembly (25, Figure 16) with retaining ring (6, Figure 14). Attach hood (9) with screws (8). Remove backing from insert (10) and press in place.

f. Hold the lens carrier (5) between the hinge bosses of the mechanism housing. Insert washers (4) and (3) between the lens carrier hinge ears and mechanism housing hinge bosses and press hinge pins (1) and (2) into place. The lens carrier catch installed in paragraph 31, step a, must be adjusted as necessary to permit the lens carrier to be opened freely, yet must hold carrier firmly against the stop screw (31, Figure 16) in the closed position.

34. REASSEMBLING BLOWER AND MOTOR (Figure 13).

a. Insert blower wheel (4) into opening in housing (5) so hub is toward stud side of housing.

b. Assemble shaft of motor (3) to wheel thru housing.

c. Secure motor to housing with 4 studs (1) and washers (2).

d. Visually center blower wheel in housing and tighten setscrew.

35. REASSEMBLING THE SOUNDHEAD (Figure 11).

Reassemble soundhead parts in reverse order of disassembly, noting the following special precautions.

a. Apply a light film of oil to all roller shafts before installing rollers. Do not over-lubricate.

b. Assemble photocell (24), retainer (23) and the sound drum shaft (22) loosely before inserting shaft into soundhead housing. Setscrew (20) bears against the retainer (23) and the two Sems screws (21) are screwed down into tapped holes in the sound drum shaft housing. The insert in Figure 11, illustrates the manner in which the silicon cell leadwires are soldered to the terminal board (25). When the soundhead is installed, the terminal board is attached to the mechanism plate directly behind the top of the flywheel with a single screw.

c. The exciter lamp pin (39B) spring (39C) and collar (39A) are assembled as shown in the cross-section view of the housing in Figure 11.

36. REASSEMBLING REAR REEL ARM (Figure 10).

Reassemble rear reel arm parts in reverse order of disassembly, noting the following special precautions.

a. Make certain that all gear teeth are meshing properly (without binding, but with no obvious looseness). Adjust per paragraph 50b.

b. Lubricate the gear teeth sparingly with grease, and check gear action before installing cover (8).

c. Use part no. 34874 shims as required to prevent cover from dimpling.

37. REASSEMBLING FRONT REEL ARM (Figure 9).

Reassemble front reel arm parts in reverse order of disassembly, noting the following special precautions.

a. Make certain that all gear teeth are meshing properly (without binding, but with no obvious looseness). Adjust per paragraph 50a.

b. Lubricate gear teeth sparingly with grease, and check gear action and clutching action before installing reel arm cover (3).

c. Use part no. 34874 shims (4), as required, to prevent cover from dimpling.

d. The insert in Figure 9 shows the method of installing spring (17) when disc assembly (NPN) and shaft (20) are assembled.

38. REASSEMBLING THE PROJECTOR (Figure 8).

Reassemble Figure 8 parts in reverse order of disassembly. Make wiring connections according to the wiring diagrams (Figures 23, 24, 27 and 27A).

a. After tilt mechanism (21) is installed, rotate knob (20) to retract tilt bar (23) up against base.

b. Do not tighten the blower bracket screws (14) until rear mechanism plate parts are assembled.

39. REASSEMBLING THE PROJECTOR (Figure 7).

Reassemble Figure 7 parts in reverse order of disassembly. Refer to the wiring diagram (Figures 23 24, 27 and 27A) for proper wiring connections.

a. Fasten the mechanism assembly (4) in place with screws (2) and washers (3). The lower right screw (toward rear of main plate) also secures the projector frame ground lead. The lower left screw also screws the cable clamp (30).

b. In replacing the flywheel (7) note whether there are spacing washers (8). These are used when the inside hub of the flywheel is enlarged to eliminate binding against the sound drum. Use pin wrench as indicated in disassembly procedures to keep shaft of sound head from turning while tightening nut (7).

c. Screw snubber mounting posts (27) securely into the main plate casting and install the snubber roller parts (19, through 27). Assemble roller (18) and film guide (16) to mounting post with screw (14). Attach the spacer (17) and front end of the film guide (16) to main plate with the stud (15).

40. REASSEMBLING THE PROJECTOR (Figure 6).

Reassemble Figure 6 parts in reverse order of disassembly, noting the following special precautions.

a. Replace all wiring as noted at time of removal.

b. Assemble clevis and bracket assembly (19). Insert free end of clevis rod (9) into hole in end of douser bracket assembly (8, Figure 17). Screws (1) attach both the receptacle mounting bracket (3) and clevis and bracket assembly. Insert extension spring (13) into slot and under rivet in the rivet and solenoid assembly (12). Hook free end of extension spring (13) in hole in top arm of clevis and bracket assembly (19).

41. REASSEMBLING THE PROJECTOR (Figure 5).

Reassemble Figure 5 parts in reverse order of disassembly, noting the following special precautions.

a. All wiring connections are as illustrated in the wiring diagrams (Figure 21 thru 24).

b. Available motors for the projector are listed below. Identify replacement motor by referring to the motor nameplate for manufacturer and part number.

MOTOR	BRACKETS
60 Cycle	
P/N 09817 (General Electric) GE5KCM49EG135	31263 (two required)
50/60 Cycle	
P/N 011893 (Robbins-Myer) RMFRKL-E26AOTS	31263 (two required)
50 Cycle	
P/N 012312 (Robbins-Myer) RMFRKL-G26AOTS	31263 (one required)
	39525 (one required)

After installing the motor mounting brackets (36) assemble pulley (34) to motor shaft with setscrew (33). Install belt (32) over mechanism assembly pulley. Engage other end of the belt with motor pulley (34) and install the motor, positioning the grooves of the motor cushion supports (30B) in the brackets (36). Then install motor bracket straps (28).

c. Install the idler assemblies (18) and (21), but do not tighten the attaching screws at this time. The end of the grounding spring (6) must apply tension to the end of the sound drum shaft. Bend spring if necessary.

42. REASSEMBLING THE PROJECTOR (Figure 4).

Reassemble Figure 4 parts in reverse order of disassembly, noting the following special precautions.

a. Replace all wiring as noted at time of removal.

b. Install bracket (17). Adjust the pilot light bracket so that the contour of the lamphouse matches with the mechanism housing and the lamphouse opens and closes without binding. If necessary, adjust the lamphouse latch (Figure 12, item 8) so that the lamphouse is held securely against the main plate.

c. Install knobs (5 through 7) with approximately 1/32-inch clearance between the knob and nameplate.

d. Perform the optical alignment procedure outlined in paragraph 45.

43. REASSEMBLING THE PROJECTOR (Figure 3).

Reassemble Figure 3 parts in reverse order of disassembly, noting the following special precautions.

a. Assemble washer (30) over spline of each reel arm, and install reel arms to main plate. Install the

black lock disc (26) over spline of front reel arm so that notch in outer circle of disc is at approximately 10 o'clock position (when viewing rear of main plate). Install nickel-plated lock disc (27) over spline of the rear reel arm so that the smallest notch is centered at the 3 o'clock position. Install locking collars (25) fastened with setscrews (24).

b. Assemble washers (23) and (19) and reverse take-up sprocket (20) onto the front reel arm shaft. Assemble washer (19). Install rewind sprocket (17) and collar (16) onto reel arm shaft so that the tongue of collar enters groove of the shaft. Insert an 0.003-inch shim between washers (17) and (19). Press all parts together and tighten setscrews (15). Remove shim stock. Assemble two washers (23) and one washer (19) onto rear reel arm shaft. Assemble take-up sprocket assembly (19A), and washers (19 and 23). Secure with retaining ring (21).

c. Refer to Figure 5. Install reel arm lock plungers (27), springs (26) and brackets (25) with screws (24). The narrow portion of each lock plunger bar must rest on the flange of the reel arm lock discs. The groove in each bracket (25) must straddle the narrow portion of the bar.

d. Install the timing belt (14, Figure 3) under small sprocket (25, Figure 14) around large sprocket (19, Figure 3) of front reel arm and rear reel arm sprocket (19A). Adjust idler roller tension as instructed in paragraph 50.

e. Perform all the necessary adjustments and alignments as directed in the Adjustment Section.

Adjustments

WARNING

Many of the procedures listed in this section require operation with the rear cover removed and protective switch defeated. To avoid shock hazards, disconnect the power and discharge motor starting capacitor, when not required. Use of an isolation transformer is recommended.

44. INTRODUCTION.

The adjustments listed in this section are those which either require special tools, are of such nature as to require tolerances or sequential adjustments not readily determinable by inspection, or which differ radically from service procedures applicable to prior Filmosound designs. Routine adjustments such as those applicable to sliding fits, bearing clearances and end-play (within normal shop practices) have not been listed. All special tools required to perform adjustment procedures are illustrated in Figure A.

45. OPTICAL ALIGNMENT. (See Figure B.) (Proceed in sequence listed.)

a. APERTURE PLATE. Remove projection lens, projection lamp, and pressure shoe assembly. Turn mechanism until shutter is opened. Loosen two screws (26 and 16) enough to permit free movement of the aperture plate. Tip projector over on its back, open lens mount and insert aperture plug (SER-550-2-N3) into aperture opening. Close lens mount and insert lens plug (SER-550-2-N1) into the lens mount. Insert alignment rod (SER-550-2-N2) into hole in lens plug. Lower rod carefully and shift aperture plate as required until rod enters hole in the aperture plug. Tighten the aperture plate retaining screws securely. Put the projector back on its base, leaving lens plug, aperture plug and aligning rod in place with the aligning rod extending about one inch through the aperture plate.

b. LAMP BRACKET. Mount the bracket to the main plate using screws (29, Figure 4), but do not tighten. Slide the upper and lower lamp bracket clips (26 and

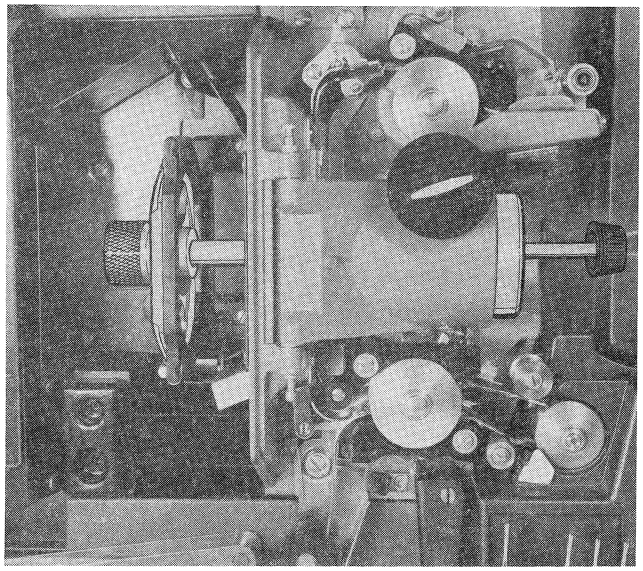

Figure B. Optical Alignment Adjustment

27, Figure 4) outward to their stops. Place the bracket setting gage (1, Figure A) into the bracket with the long end toward the aperture plate and onto the aligning rod (3, Figure A). Slide the clips back into place to retain the gage (1, Figure A). Lightly adjust the bracket until the long end of the gage makes contact with the back of the aperture plate and the aligning rod slides easily through the gage. Tighten the mounting screws securely to a minimum torque of 14 in-lb.

c. FINAL CHECK. Slide the alignment rod back and forth in alignment plugs. Since rod is a lapped fit in holes, light resistance should be felt. If rod binds, determine point of binding and relocate the misaligned part. Tip projector over on its back and remove the alignment rod with plugs. Be careful not to lose the aperture plug. Install pressure shoe assembly and visually center in aperture plate before tightening the retaining screws.

46. INTERMITTENT ADJUSTMENTS. (See Figure 17)

a. SHUTTLE TOOTH SIDE CLEARANCE. When the shuttle is at center of stroke, clearance between sides of shuttle teeth and edge of shuttle slot in aperture plate should be approximately 0.009-inch. Use a feeler gage. If clearance varies from top to bottom of shuttle and is less than 0.005-inch at either end, aperture plate is probably out of alignment (see paragraph 45, a). Side clearance is related to stroke; therefore, make sure that stroke is correct (see paragraph 46, d) if clearance is inadequate. If stroke is correct, but clearance is inadequate, it is probable that a link bearing (22A, Figure 17) is missing. It is possible though not very probable that a ball and stud assembly (17) could have slipped on a shuttle arm (22). When required, the shuttle clearance can be adjusted by loosening the nuts (16) fastening the ball and stud assemblies (17) and moving the shuttle arms as required to permit entry of the .009 feeler between the shuttle and the aperture plate.

b. SHUTTLE TOOTH PROTRUSION. If transport mechanism has been removed from the main frame, turn mechanism drive pulley until shuttle is near mid-stroke and notched hole in shutter (14) is aligned with access hole in douser bracket assembly (8). If transport is assembled to main frame, remove lamp-holder assembly (30, Figure 4) lamp shield (19, Figure 4) and pulley shield (24, Figure 4). Access hole in douser bracket assembly (8) can now be reached through lamphouse. After turning drive pulley to align notched hole in shutter with access hole, insert short end of #4 Bristo wrench and engage in-out cam follower screw. Open film gage and check shuttle tooth protrusion with height gage (SER-09701-35-N2). If "NO-GO" step passes over tooth, turn cam follower screw (25A, Figure 17) counterclockwise to increase height. If "GO" step will not pass over tooth, turn follower screw clockwise to decrease protrusion.

NOTE

If one of the shuttle teeth cannot be brought into tolerance, an adjustment can be made by loosening the mounting screw (24, Figure 17) of the in-out bracket assembly (25) and shifting the assembly as required. Retighten to 12 in.-lbs. minimum torque.

c. FIT OF THE SHUTTLE TO PULL-DOWN CAM. (See Figure C.) Remove the rear cover, blower assembly, and assembled solenoid, switches and clevis bracket assembly if previously installed.

NOTE

If the projector has just been lubricated, run for two or three minutes before proceeding.

(1) Open film gate and turn projector mechanism by hand until shuttle teeth are retracted and have moved downward to approximately the center of the stroke (center tooth approximately on horizontal center-line of aperture). Slip guide bars of tool (SER-552-4-N1) over casting to which shuttle mounting plate is attached (Figure C). When tool A is positioned so that stud B can bear on shuttle arm C, tighten the thumbscrew D just enough to hold tool in position. Engage hook of tool (SER-552-4-N2) in slot of stud B as shown, and allow weight E to swing downward. Tilt projector, if required, so that weight E does not rub on any stationary parts.

(2) Loosen upper bearing support assembly F approximately one turn. Rotate framer knob (47, Figure 17) so that pointer G moves above witness mark H. Then turn framer knob in the opposite direction until pointer G moves back down in line with mark H.

NOTE

If adjustment of framer knob does not permit movement of pointer G as specified, it may be necessary to rotate shuttle shaft slightly to bring cam into proper position.

(3) Carefully tighten upper bearing support assembly F while observing alignment of pointer G with witness mark H. The instant that pointer G starts to

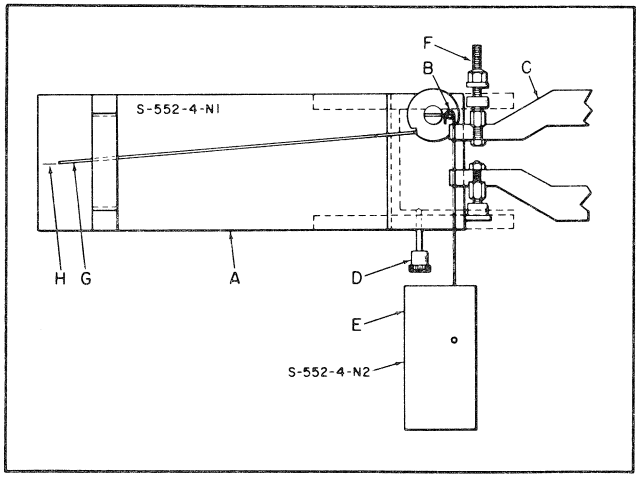

Figure C. Adjusting Fit of Shuttle to Pull-Down Cam

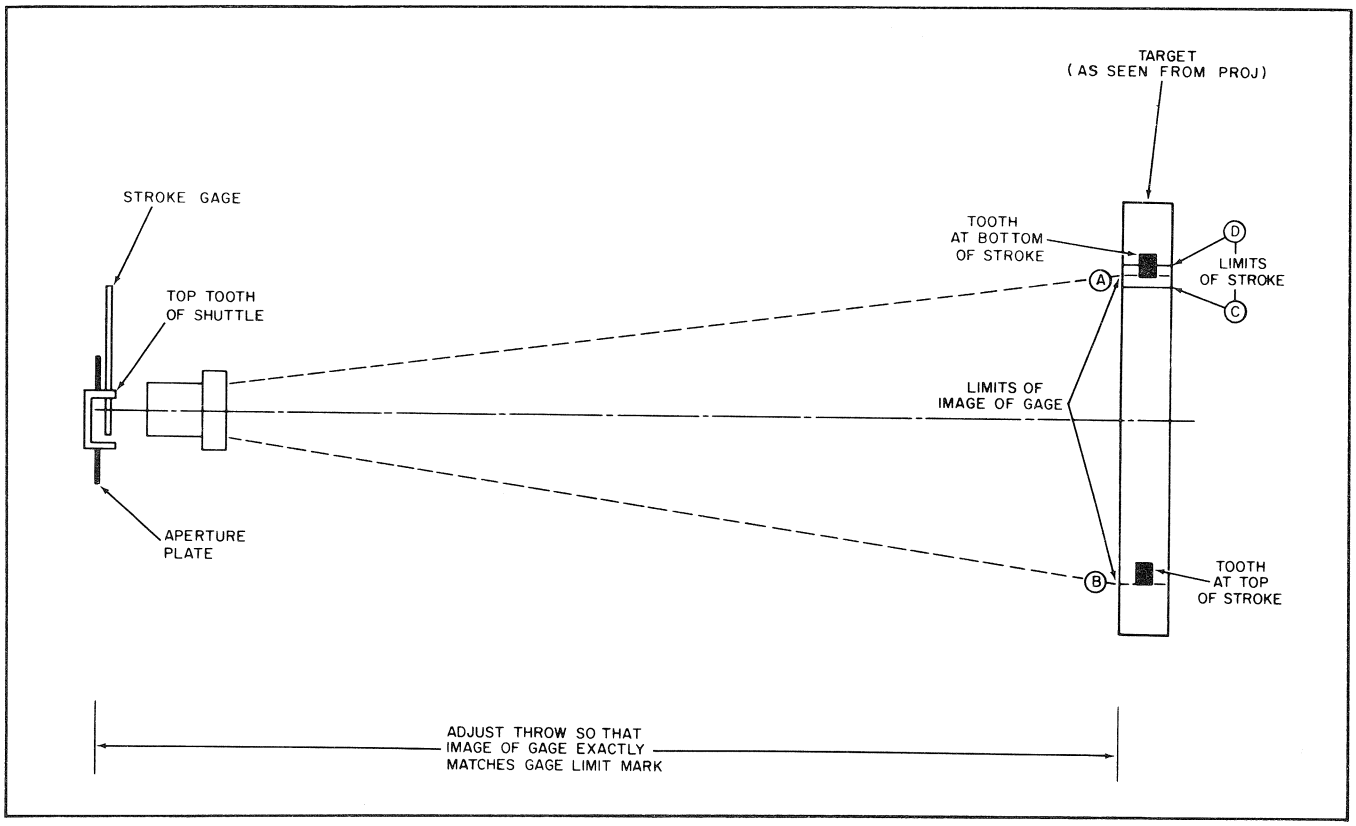

Figure D. Checking and Adjusting Shuttle Stroke with Target

move upward, stop turning support assembly F. This is the proper adjustment.

CAUTION

Do not tighten the shuttle more than is specified to remove cam noise. Excessive tightening of shuttle in an attempt to load mechanism for the purpose of reducing other noises will reduce life of cam and cam shoes.

d. SHUTTLE STROKE. Normal shuttle stroke (vertical travel of shuttle teeth) is 0.3025 inch. The most convenient means of measuring the stroke is to use the projector as an optical comparitor. The step on stroke gage (SER-550-5-N2) is the length of the nominal stroke. When it is inserted in the aperture and projected, it provides a reference dimension with which the actual stroke can be compared. Figure D is a sketch of a target. The A to B section is a 100 to 1 enlargement of the gate. The C and D lines represent 100 to 1 enlargements of the limits of tolerance.

(1) PROCEDURE FOR MEASURING SHUTTLE STROKE.

(a) Remove pressure shoe assembly, and drive belt.

(b) Set the framer knob at midpoint.

(c) Suspend target approximately 18 feet from the projector with center of target on same horizontal line as optical axis of projector. If room arrangement necessitates tilting projector, target must also be tilted so that angle between target and optical axis is 90 degrees. If this is not done, "Keystone" error will be produced.

(d) Turn projector mechanism by hand until shuttle is at bottom of stroke and shutter just clears aperture.

(e) Insert stroke gage (SER-550-5-N2) in aperture plate and push it down against top tooth of claw. Close film gate.

(f) Turn on projector lamp and focus shuttle slot on target. Move projector toward or away from target until sharply focused image of step at end of stroke gage just reaches from line A to line B (Figure D).

(g) Slide gage up out of field of view and turn mechanism pulley until center tooth of shuttle is at top of stroke indicated by image of tooth near line A. Adjust framer, if required, until projected image of edge of tooth just touches line A.

(h) Turn mechanism pulley until center tooth of shuttle reappears at top of target. Rock mechanism pulley to find top of shuttle stroke. Edge of tooth used

as reference in step (g) must fall between lines C and D (Figure D). If image falls between C and A, stroke is too short. If image falls beyond D, stroke is too long.

(2) PROCEDURE FOR ADJUSTING SHUTTLE STROKE. Loosen two screws (27, Figure 17) just enough to permit movement of shuttle plate (28).

(a) To lengthen the stroke, move shuttle arm plate (28, Figure 17) toward pull-down cam (23).

(b) To shorten the stroke, move the shuttle arm plate assembly away from pull-down cam.

(c) After adjusting stroke, recheck shuttle tooth side clearance as instructed in paragraph 46, a, and readjust if necessary.

CAUTION

Do not attempt to eliminate film slap by setting stroke outside established tolerances. This will produce double image and/or jump with films having different shrink or stretch.

e. FRAMING ADJUSTMENT. Thread projector with film having proper frame line position. Project film and turn framing knob from one limit to the other. If at one limit a frameline is not visible, loosen nut on framing eccentric (located at top of shuttle arm plate assembly (28, Figure 17) and turn eccentric until the frame line appears. Hold eccentric while tightening nut. Check adjustment by again turning framing knob from limit to limit while observing picture. When eccentric is properly adjusted, either frame line can be projected and movement of film should be approximately equal at top and bottom of framer travel.

47. LENS MOUNT ADJUSTMENT. Angular relationship between projection lens mount and the aperture plate is controlled by lens mount stop screw (31, Figure 16). Thread projector with roll title or target film having sharp images in corners and project a picture approximately 30 inches high onto a matte surface. Note that the projector must be square with screen. Focus the picture and compare resolution of the two sides of the image when viewed from a distance of approximately twice the width of the picture. If one side appears to be soft, refocus to sharpen that edge of the picture and note whether the lens is moved toward or away from the aperture. For example, if image at right-hand edge of screen is soft until lens is moved toward aperture, then lens stop screw is set too far forward and should be turned clockwise.

CAUTION

This adjustment is critical. Lens stop screw should be turned only a few degrees between tests for sharpness.

48. ADJUST DOUSER SOLENOID.

To adjust the douser solenoid use the following procedure:

a. Energize douser solenoid.

b. If douser solenoid does not move freely when energized and de-energized loosen two mounting screws (10, Figure 6) and reposition the solenoid until douser moves freely when energized and de-energized.

49. ADJUST MICRO SWITCHES (See Figure 6).

CAUTION

Be certain no power is connected to the projector and that projector is in OFF condition.

a. Check to see that the mounting screws on each micro switch are tightened securely.

b. Connect a Simpson #260 Volt-Ohm Meter or equivalent between A and NO of the latching switch.

c. Depress douser solenoid manually and read continuity on meter.

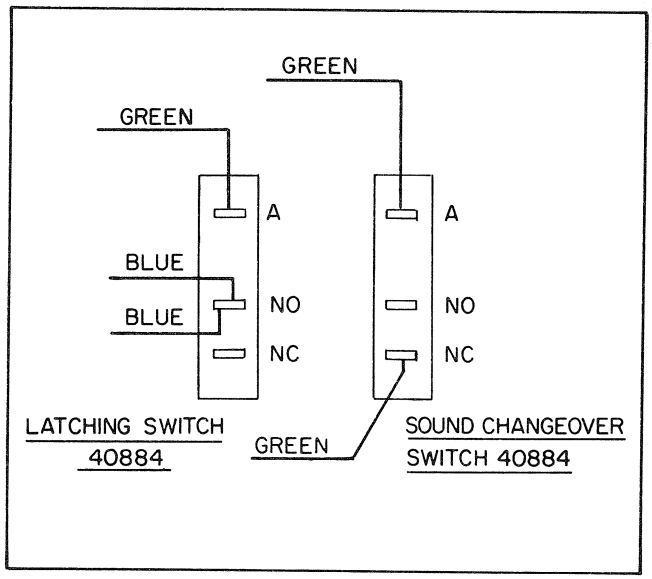

d. Connect the meter between A and NC of sound changeover switch.

e. Depress douser solenoid and read open circuit on meter.

f. If above results are not obtained, loosen mounting screws of switch or switches and reposition until proper operation occurs.

50. REEL ARM AND THE REWIND CLUTCH ADJUSTMENT.

a. FRONT REEL ARM ASSEMBLY. (Figure 9.) Adjust end play of drive shaft (28) to 0.008 inch ± 0.003 inch by positioning retaining ring (23) against an 0.008 inch shim. The backlash on the lower gear assembly (9) should be between 0.005 inch minimum and 0.018 inch maximum. Adjust by assembling, as required, a combination of 0.010 inch washers (10) and 0.005 inch washers (12) on the feed spindle assembly (13). Greater thickness in washer combinations reduces backlash.

b. REAR REEL ARM ASSEMBLY. (Figure 10.) Adjust end play of drive shaft (22) to 0.008 inch ± 0.003 inch by positioning retaining ring (9) against an 0.008 inch shim. The backlash on the upper gear assembly (25) should be 0.015 inch ± 0.003 inch. Adjust by increasing or decreasing a build-up of 0.005 inch and 0.0025 inch washers (26 and 27), as required, beneath the upper gear assembly (25). Greater thickness in washer combinations reduces backlash.

c. REWIND CLUTCH ADJUSTMENT. (See Figure 3.) The rewind clutch should be adjusted to produce a supply spindle torque of 5-1/2 to 6 in.-oz. when rewind button is depressed. Use standard reel and spring balance method of measuring torque. The clutch is adjusted by means of hex nut on outer end of sprocket (18). Tighten nut to increase torque. Loosen to decrease torque.

51. SOUNDHEAD ADJUSTMENTS.

a. REMOVAL. Due to the ease with which the head can be removed and the greater accessibility thereby obtained, time will be saved by removing the head if major work is required.

(1) Disconnect photocell and exciter lamp cable from amplifier and release cables from retaining clips.

(2) Remove grounding spring (41, Figure 5). Insert the end of an Allen wrench or short steel pin in hole in sound drum bearing housing directly behind flywheel until wrench or pin drops through the hole in sound drum shaft. Remove flywheel retaining nut (5, Figure 7), flywheel (7), and washer (8).

(3) With a sharp pencil, draw a line on the main frame where the front edge of the soundhead meets the frame. This will provide a reference mark when reassembling.

(4) Take out the three screws (9 and 11, Figure 7) which tap into the soundhead from rear of main frame, and carefully withdraw soundhead.

b. PHOTOCELL ALIGNMENT. (See Figure 11.)

CAUTION

Do not scratch light pipe surface of photocell. Clean with Opti-Kleen before adjusting.

(1) The adjustment of the light pipe is made with alignment tool (SER-550-8-N1). The setscrew (19) and screws (21) must be loosened and exciter lamp (10) and optical slit (13) removed.

(2) Insert alignment tool as shown in Figure E and adjust sound drum in or out until inner face of drum contacts the first notch of tool and tighten the screws (19) securely. Withdraw tool and shift entire photocell so that forward end is aligned with inner face of sound drum. Tighten setscrew (20) securely; install lamp and optical slit and adjust slit (paragraph 51, d).

c. TENSION ROLLERS. (See Figure 11.) Arms upon which rollers (29) and (30) are mounted are linked by torsion spring (37). Therefore, roller arms move as a pair. Counterbalance spring (31) offsets the weight of the rollers and arms. Place soundhead on a level surface and move roller arms (as a set) to various positions. If spring tension is incorrect, roller arms will not remain in the position in which placed. If roller arms swing downward, loosen retaining screw (32) and move spring terminal downward until weight of arms is counterbalanced. If roller arms move upward, move terminal upward to reduce counterbalancing force.

d. OPTICAL SLIT ASSEMBLY. (See Figure 11.)

(1) Loosen clamping screw (11). If slit does not slide freely in holder, insert bit of small screwdriver in slot in clamp and wedge clamp open to free slit assembly. Thread projector with 7000 cps optical setting film and connect 16-ohm, 10-watt load resistor and output meter to speaker jack.

NOTE

A pair of hairpin tongs approximately six inches long and formed with the ends turned inward and tapered to engage holes in end of slit barrel are very useful in adjusting the slit. They can be made from 20 to 26 gage music wire or 1/16-inch diameter drill rod.

(2) Set volume control at approximately 12 o'clock position and start projector. Move slit toward or away from film, as required, to obtain output reading. Rotate slit to obtain peak reading and simultaneously move in or out until maximum output is obtained. If film was threaded with emulsion toward slit, move slit toward film until output drops 1-1/2 to 2 db. If emulsion is toward sound drum, move slit away from film to obtain 1-1/2 to 2 db drop in output. Tighten slit clamping screw.

e. BUZZ TRACK ADJUSTMENT. (See Figure 11.) Lateral position of the film in the soundhead is controlled by the flanged roller (27) and edge guide screw (24). Unless the adjustment has been disturbed, it is not probable that the edge guide screw (24) will require resetting. Thread the projector with buzz track

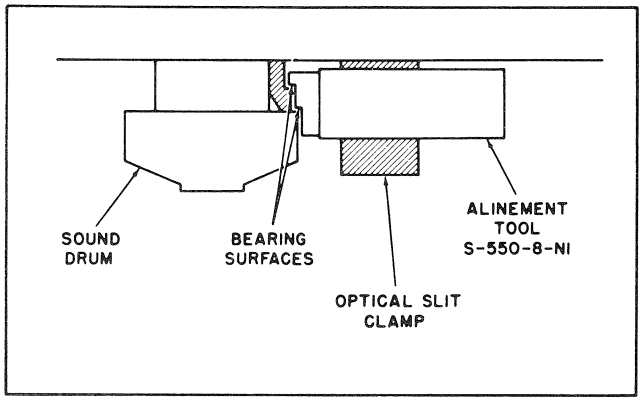

Figure E. Photocell Adjustment

film and adjust volume control to a suitable listening level. Turn adjusting screw (14) to move flanged roller laterally.

NOTE

There are two types of buzz track in use. On one, the track spacing exceeds the length of the scanning beam. This track can be positioned so that little or no signal is reproduced. On the other type of track, spacing is less than the length of the beam. This track should be positioned so that both tones are reproduced at approximately the same volume level. If, after adjustment of guide roller position, signal levels cannot be balanced (or eliminated on wide track), or level of tones fluctuates, adjust edge guide screw (24) to clear up the condition. If the edge guide screw is far out of adjustment, turn it clockwise until it clears edge of film, adjust rollers and than set guide screw to stop side weave of film.

52. TIMING BELT IDLER ADJUSTMENT. Belt tension is not critical, although excessive tension will reduce belt life. Set rewind belt idler so that midpoint of slack side of belt can be pushed inward approximately 1/8-inch by light pressure. Set take-up belt idler so that belt can be pushed down against motor relay mounting bracket by light pressure.

53. PROJECTOR SPEED CHECKS. The speed of the projector is not adjustable. Therefore, speed checks are primarily for the purpose of determining that the equipment is operating properly and as a means of detecting excessive mechanism loads, damaged drive belt or similar conditions.

a. METHODS OF MEASUREMENT. Various devices and procedures can be used to check projector speed. The most common ones are as follows:

(1) PHOTOCELL AND FREQUENCY METER. Used to measure the number of pulsations of the projection beam per second. Pulsations per second is then converted to projector speed. This method is quite practical in large volume shops.

(2) "STROBATAC" or similar strobe light. Is usually synchronized with interrupter shutter or shuttle. Shutter makes one revolution per frame. Shuttle makes one stroke per frame.

(3) TACHOMETER (preferably having a speed range with a maximum speed of 150-200 rpm). Used to measure rpm of sprocket.

(4) STROBE DISC. Attached to sprocket by means of suction cup or rubber foot. For viewing with light from 60 cps source, disc should have 70 dots for sound speed, 93 dots for silent speed. Count number of apparent revolutions of pattern for one minute. If pattern drifts in direction of rotation, add to design speed to obtain true speed. If pattern drifts against rotation, subtract from design speed to obtain true speed.

(5) TIMED LOOP. Make loop of exactly 120 frames. At sound speed splice will pass aperture 12 times per minute plus or minus the permissible variation in speed and the timing error.

b. SPEEDS AT 120 VOLTS 60 CPS AC. (566A)
SPEEDS AT 120 VOLTS 50 CPS AC. (566X)

SOUND SPEED (24 FPS ± 2%)

Shutter - 1440.00 RPM ± 2%
Sprocket - 102.86 RPM ± 2%

54. AUTO-LOAD SYSTEM ADJUSTMENT PROCEDURE – GENERAL.

a. The auto-load system consists of a series of guides and rollers which, when the system is in the load position, are so located as to guide the film through the threading path. When the system is in the open position, the guides and rollers clear the film path.

b. When the system is in the open position, the location of the guiding parts is not critical. Therefore, adjustments to assure proper location of the guiding parts are made with the system in the load position.

c. The guides are connected by mechanical linkage. The system is actuated by a cocking lever at the lower end of the linkage and the movement is stopped at the top end of the linkage. The specified clearances must be checked with the system in the load position. If the need for adjustments is detected, it is important that the repairmen proceeds in the sequence listed in this section. The sprocket timing and the locating of the soundhead may be done without disturbing the guide adjustments.

55. CHECKING AND ADJUSTING LOADING GUIDES.

a. Open the film gate and the upper take-up sprocket shoe (1, Figure F) and remove retaining screw (2).

b. Place timing plate (SER-552-1-N1) over the sprocket hubs (3) and (4). The timing plate locating pin should enter the counterbore from which screw (2) was removed. If the locating pin does not enter counterbore, loosen three sprocket guard plate attaching screws (1, Figure G) and rotate the lower guard plate (2) until pin enters hole. Then tighten the three screws securely.

c. Remove retaining ring that secures the actuating assembly (5, Figure F) and lock the auto-load system. Place a 0.015-inch feeler gage between the film support rails of the aperture plate and the rear surface of the lower loop form assembly (4, Figure G). This surface should touch the feeler gage just as the heel of the loop form (5, Figure G) strikes the shoulder on the mounting stud for the entrance guide roller (6, Figure G). To adjust, loosen two screws (7, Figure G) which attach the upper sprocket guard plate. Press downward on front end of loop form assembly and rotate upper sprocket guard plate until heel of loop form strikes shoulder of stud and rear

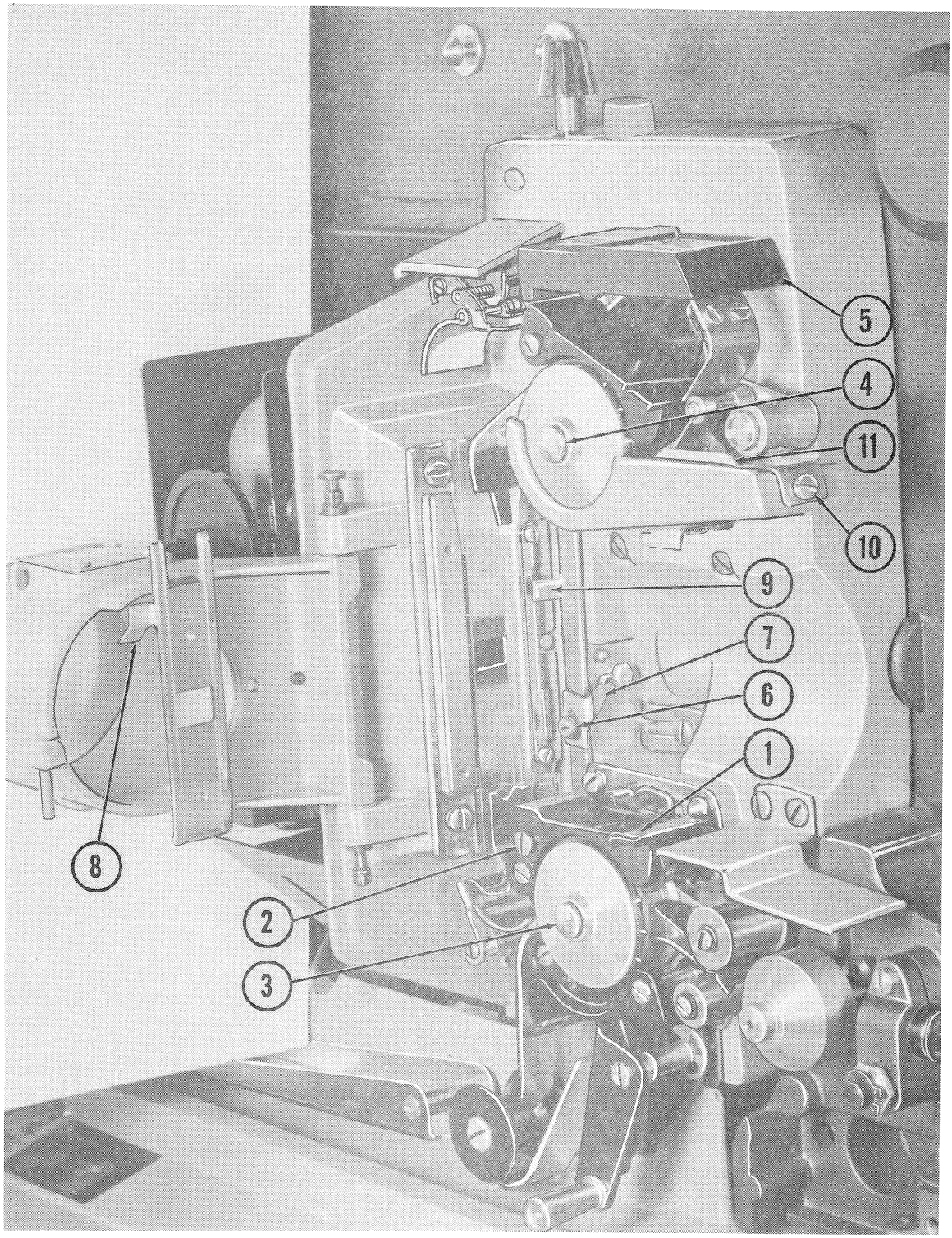

Figure F. Autoload System Adjustment Points (Sheet 1)

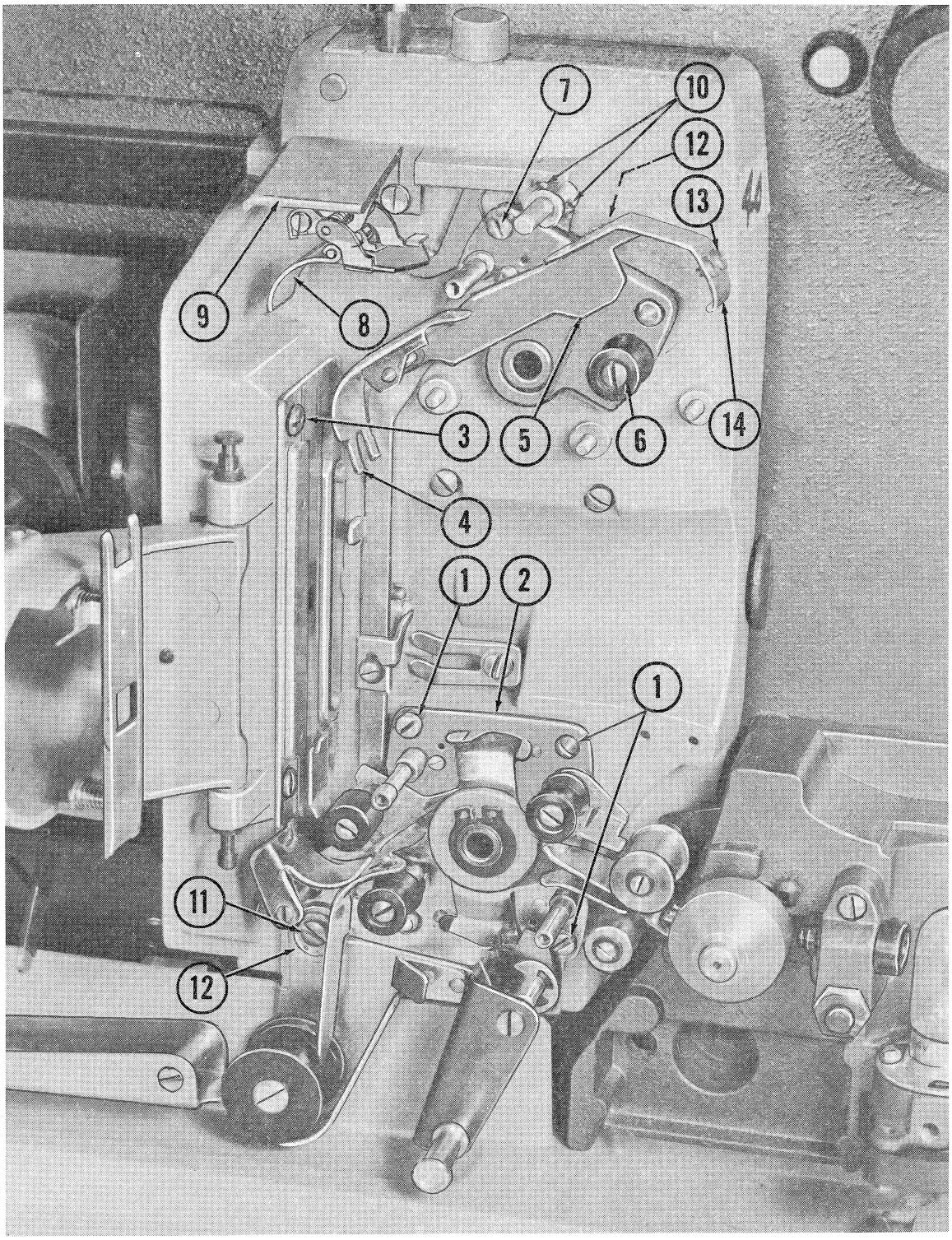

Figure G. Autoload System Adjustment Points (Sheet 2)

surface clears aperture rails by 0.015-inch. Then tighten screws (7, Figure G) securely.

NOTE

Depress lower loop form and check to see that pin in threading lever (32, Figure 15) clears the bottom of the slot in arm of shaft (25, Figure 16) by 1/64-inch. To adjust, loosen screw (31, Figure 15) and shift threading lever.

d. Check operation of the film escape mechanism by leaving the auto-thread system open. Manually advance the film and jam it in the upper channel. The film should fold and flow out through the kickplate in the loop-former (5, Figure 16). If the kickplate does not release, the arm of the hub assembly (12, Figure 16) is not striking the hood (9, Figure 14) properly. The hood can be moved slightly and the hub assembly should be adjusted accordingly.

When the auto-system is activated and the kickplate does not lock in position loosen the screw (10, Figure 16) holding the hub assembly to locking pawl (11) and adjust the hub assembly until the tip of the bracket touches the upper curved surface of the loop former. This will lock kickplate in position.

e. Again depress the loop form assembly and check to make certain that there is 0.012 to 0.015 inch clearance between the top surface of the lower loop form (4, Figure G) and the bottom surface of the upper loop form (8). If adjustment is required, remove the two screws which attach the hood (9). Loosen two setscrews (10) and rotate upper loop form (8) to obtain desired clearance. Tighten setscrews and reinstall hood. Before tightening hood retaining screws, press hood toward rear of projector.

f. With the auto-load system locked and film gate open, check to make certain that the shuttle teeth do not protrude through the slot in the aperture plate. If shuttle teeth protrude, loosen screw (6, Figure F) and carefully raise the shuttle retractor (7) until teeth are retracted; then tighten screw (6) securely.

CAUTION

The top end of the shuttle retractor must not strike the casting.

g. Close film gate while observing to see that the film pressure plate does not contact the aperture plate. If pressure plate remains in contact with aperture plate, either the pressure plate lift-off ear (8, Figure F) or the ear (9) on the threading guide linkage is bent. Reform ear, or ears, as necessary.

h. Loosen screw (10, Figure F) and align the film guide (11) so that film will feed squarely to the sprocket; then retighten screw (10).

i. Loosen screw (11, Figure G), lock the system, and check to make certain that loop form heel (5) is bearing on shoulder of roller stud (6). If necessary, rotate the eccentric pivot (12) with a wire pick or pin punch until heel bears against stud shoulder. When loop form is pressed downward, there must be no clearance between heel and stud shoulder. Recheck clearance between rear of loop form and aperture rails. Also, make certain that end of upper loop form (8) is tangent to or slightly ahead of the plane of the aperture plate film support rails. If readjustment is necessary, refer to steps c through e, preceding. Install actuating assembly (5, Figure F).

j. Lock the system and try inserting film into the feed sprocket. If film slips in too freely, loosen the two screws (13, Figure G) and move leaf spring (14) downward to increase pressure on the film. If the film buckles as it is inserted, move the leaf spring upward to reduce the pressure; then tighten screws (13).

56. CHECKING AND ADJUSTING LOOP RESTORER.

a. Place the restorer positioning tool (SER-552-2-N1) over loop restorer roller (1, Figure H). The tool should touch the guide roller at the rear end of the upper sprocket shoe (6). If the clearance between rollers is inadequate or excessive, refer to Parts Catalog Figure 16 and adjust as follows: Loosen two screws (20) and raise or lower the self-centering assembly (23) as required to position the loop restorer roller properly. Tighten screws (20) securely.

NOTE

Both spring-loaded "keeper" plates near the bottom of the self-centering assembly must be in contact with the ear of the assembly.

b. Manually rotate the camshaft (40, Parts Catalog Figure 17) until the restorer cam setscrew (32) is at the bottom of the camshaft. Check the clearance between the loop restorer cam (35) and the upper end of the cam follower (16E, Figure 16) with a 0.015-inch feeler gage. If clearance is incorrect, loosen screw (13, Figure 16) and rotate the cam follower support (16F, Figure 16) slightly to obtain the proper clearance. Then tighten screw (13).

c. Manually rotate the camshaft until restorer cam setscrew is at the top of the camshaft. Actuate the restorer manually and check the clearance between the upper end of the cam follower and the loop restorer cam. Clearance should now be approximately 1/32-inch. If clearance is incorrect, loosen cam follower screws (16A, Figure 16) and move the cam follower up or down to establish the proper clearance. Then tighten screws (16A) securely.

d. Loop restorer operation can be checked by running the projector with film. If the loop is not restored, or if the film rubs on the loop restorer roller during film advance, move the cam follower (16E, Figure 16) upward slightly to increase size of loop.

57. TIMING THE SPROCKETS.

a. Open the film gate and turn down the framer shaft (47, Figure 17) as far as it will go. Then turn

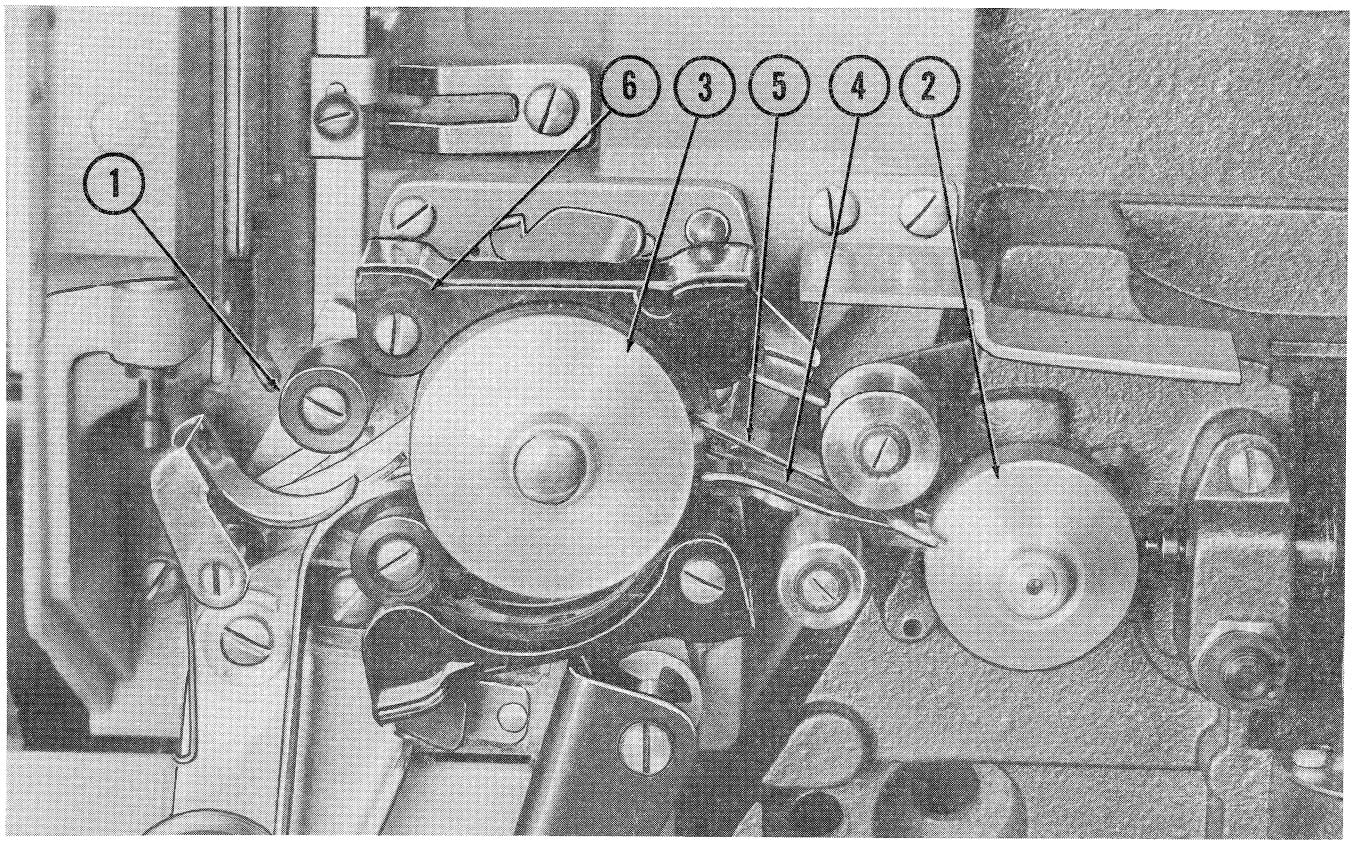

Figure H. Autoload System Adjustment Points (Sheet 3)

the mechanism manually until the shuttle is at the bottom of the stroke (teeth protruding) and the edge of the shutter blade bisects the aperture opening.

b. Open the film sprocket shoes and place the timing plate (SER-552-1-N1) over the sprocket hubs. Note which sprocket teeth are nearest to the peep holes in the timing plate. Remove the timing plate and place a pencil mark on the face of each sprocket (near the rim) exactly in line with the sprocket teeth which were nearest the peep holes. Then reinstall the timing plate on the sprocket hubs. If the sprockets are properly timed, the pencil marks will be visible through the peep holes. If the sprockets are out-of-time, proceed as follows:

c. To retime the feed (upper) sprocket, remove the sprocket shoe. Remove the two sprocket setscrews to expose the inner setscrews and loosen the inner setscrews. Rotate the sprocket until the pencil mark appears in the upper peep hole. Then tighten all four setscrews securely.

d. To retime the take-up (lower) sprocket, loosen the setscrews (32, Figure 14) in the hub of the lower sprocket gear (33) and rotate the sprocket until the pencil mark appears in the lower peep hole. Then tighten gear setscrews securely. Both sprocket shafts should have approximately 0.003-inch end play when the tension washers (34, Figure 14) are completely compressed.

58. POSITIONING THE SOUNDHEAD.

a. Lock the system in the "thread" position and loosen the three screws (9, and 11, Figure 7) which attach the soundhead to the main frame casting.

b. Hold the soundhead locating gage (SER-552-5-N1) by its handle and insert the gage carefully between the sound drum (2, Figure H) and take-up sprocket (3). The gage must be between the sound drum threading guides (4) and (5). Position the gage so that one end bears against the supporting ribs for the sound track edge of the film and with the round body of the gage in contact with the rear sprocket flange.

c. Tilt the gage so that it lies on a centerline between the take-up sprocket and sound drum. Shift the soundhead toward the take-up sprocket until the sound drum bears lightly against the end of the gage, and tighten the soundhead attaching screws.

59. CHECKING EXCITER LAMP COVER CLEARANCE. Since the film must pass between the sound drum and exciter lamp cover, the clearance between these two items should be checked. Insert a #77 drill or a straight piece of #25 wire into the channel between the drum and cover. Gage should enter channel with slight friction but without forcing. If clearance is inadequate, straighten the exciter cover locating pins to obtain proper clearance.

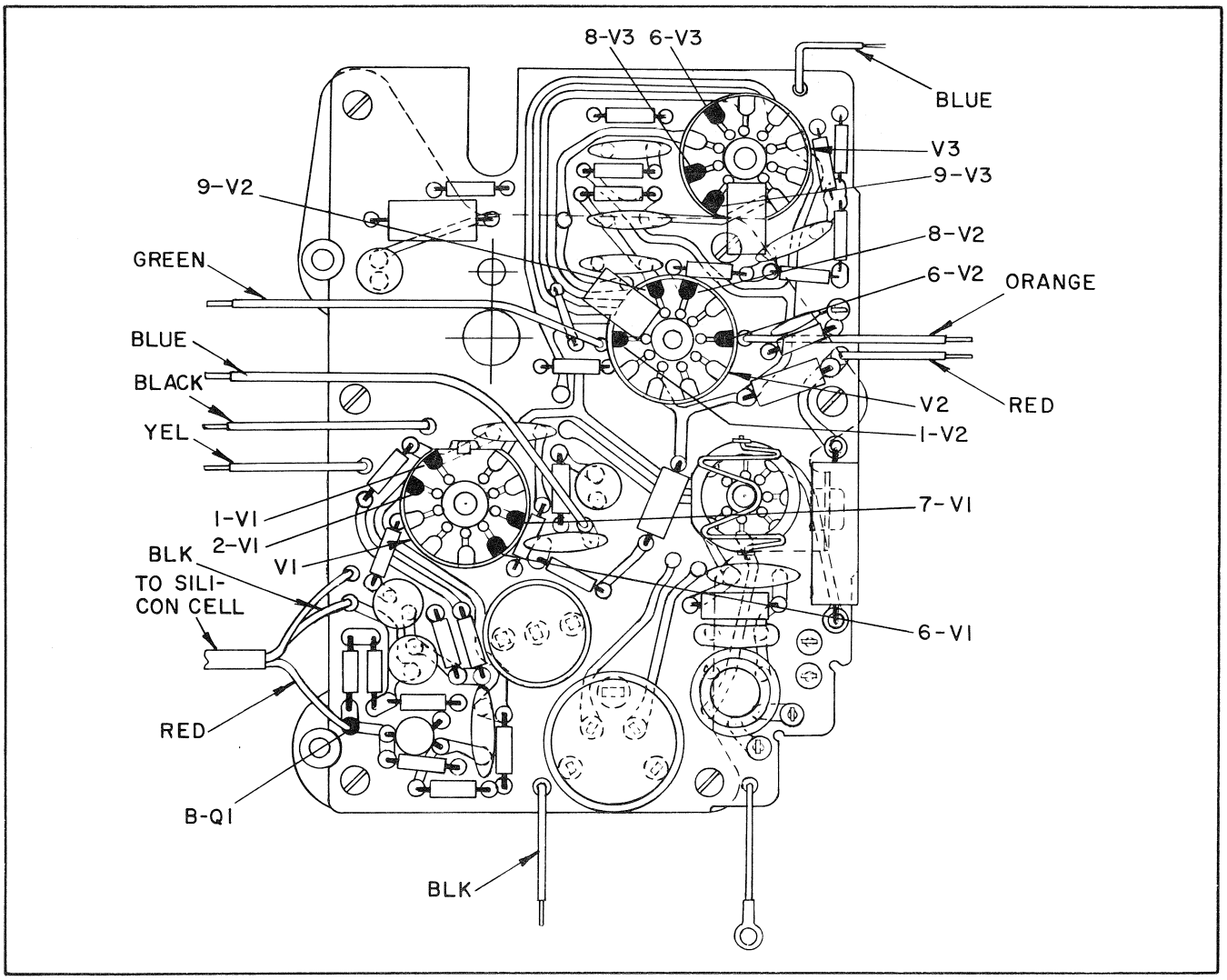

Figure J. Location of Amplifier Test Points

TUBE (Transistor)	INPUT "B"	PIN NUMBER AND VOLTAGES (± 10%)								
		1	2	3	4	5	6	7	8	9
V-1	-	.04	.02	-	-	-	1.35	.04	-	-
V-2	-	1.35	-	-	-	-	160	-	6.0	6.6
V-3	-	-	-	-	-	-	160	-	6.0	6.0
(Q-1)	.0006	-	-	-	-	-	-	-	-	-

TEST CONDITIONS:

LINE VOLTAGE - 120 V 60 CPS
INPUT SIGNAL - .0006 V @400 CPS

SIGNAL APPLIED AT B-Q1 THRU 0.5 MFD CAPACITOR AND 47K OHM RESISTER IN SERIES.

ADJUST VOLUME CONTROLS FOR 10 WATT (8.95V) ACROSS 8 OHM LOAD

ALL VOLTAGES MEASURED WITH HIGH INPUT IMPEDANCE VTVM TO COMMON GROUND (B-)

TONE CONTROL IN NORMAL POSITION.

60. CHECKING OPERATING VOLTAGE, FILM SPEED AND MAXIMUM CURRENT.

a. Allow projector to attain sound speed (minimum of ten feet run through the projector).

b. Vary voltage from 105 to 129 volts. Speed of projector must be within limits specified.

c. Observe Strobotac for proper speed.

d. With 400 feet of film on front reel arm at 105-129 volts A.C. 60 cycle the film shall travel forward at the standard sound speed of 24 frames per second plus or minus 2%. This is equivalent to a camshaft speed of 1440 R.P.M. plus or minus 28.8 R.P.M.

e. Maximum current shall not exceed 12 amp. at 120 volts 60 cycles.

61. CHECKING FILM BURN AND DOUSER CONTROL OPERATION.

a. Operate projector without film and projector lamp on. Operate in "Forward Project" and "Reverse Project" position 25 times.

b. With film in gate, stop film by turning center switch to "Off" position.

c. Turn amplifier on and check operation of ventilation fan.

d. Douser shall fully open when operated in both "Forward Project" and "Reverse Project" positions.

e. With the lamp on and with the center control switch in "Thread Forward", "Off" and "Reverse" positions, the douser shall cover the aperture promptly and completely, allowing no blistering or burning of film.

f. Solenoid Hum is acceptable, but Solenoid clatter is unacceptable during douser actuation.

g. Ventilation Fan must run when:

(1) The fan switch is in the "Fan" or "Lamp" position.

(2) With the fan switch "Off" and the amplifier turned "On".

62. CHECK SOUND REPRODUCTION CHARACTERISTICS OF AMPLIFIER AND SPEAKER.

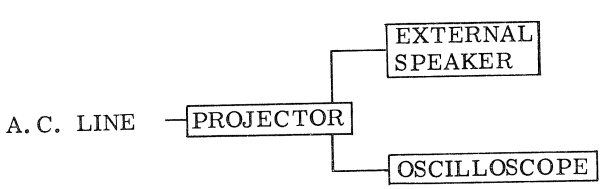

a. Microphonics

(1) Turn amplifier "ON".

(2) Use external speaker.

(3) Volume control full C.W.

(4) Tone control normal.

(5) Projector "ON".

(6) Tap projector case with palm of hand near amplifier and on exciter lamp cover.

b. Parasitics & Noise

(1) Turn amplifier "ON".

(2) Use external speaker.

(3) Projector "ON".

(4) Tone control position 1) normal; 2) hi; 3) lo.

(5) Vary volume control slowly from full C.C.W. to C.W. in each tone position in (4).

c. Acoustical Feed Back

(1) Turn amplifier "ON".

(2) Use internal speaker.

(3) Volume control at 2 o'clock position.

(4) Tone normal.

(5) Projector "ON".

(6) Switch to tone hi and low positions.

d. Speaker Power Handling Ability

(1) Thread projector with sound test film.

(2) Amplifier "ON".

(3) Tone normal.

(4) Projector "ON".

(5) Advance volume control to full C.W. for short duration.

(6) Switch between internal and external speakers.

(7) Adjust volume control for 10 watt level. (Peaks of program material to align with calibrated lines on scope - peak of 8.5 V.R.M.S. at extejnal speaker jack).

(8) Repeat 6.

(9) Adjust volume control to 2 watt level. (Peaks of program material to align with calibrated lines on scope-peak of 4.0 V.R.M.S. at external speaker jack).

(10) Use internal speaker.

(11) Rotate tone control to hi and lo positions.

63. AMPLIFIER OPERATIONAL

a. No prolonged - damped or sustained oscillations should be heard.

b. No objectionable audible parasitic oscillations or volume control noise shall exist.

c. No objectionable audible acoustical feedback shall exist.

d. Volume full C.W.: No objectionable speaker bottoming or break-up shall exist.

Volume at 10 watt level: (8.5 V.R.M.S.), No objectionable speaker rattle shall exist.

Volume at 2 watt level: (4 V.R.M.S.), All tone positions shall produce clear, clean, quality sound reproductions.

Replacement Parts

The following pages illustrate and list, by part number and description, all replacement parts of the Bell & Howell Design 566 Filmosound Projector. Illustrations are indexed in a suggested order of disassembly and will serve as an aid to the serviceman during projector repair.

The parts book identifies model 566 (60 cycle units) from the 566X (50 cycle units) by means of the usable on code. Where components are usable in both units, no code is called out. Where components are usable only on 566A Models, Code "A" is called out. Where components are usable only on 566X Models, Code "B" is called out.

FIG. & INDEX NO.	PART NO.	DESCRIPTION 1 2 3 4 5 6 7	UNITS PER ASSY	USABLE ON CODE
		LAMP SUPPLY UNIT ASSEMBLY		
1-1	013000	LAMP SUPPLY UNIT ASSY, 120 V 60 Cycle	1	A
-1	012311	LAMP SUPPLY UNIT ASSY, 115 V 50 Cycle	1	B
-2	18086	. . FOOT, Rubber	4	
-3	41124	. . FUSE, 15 AMP, 250 V, BUSS 3 AB	2	
-4	40837	LINE CORD	1	
-4	41122	CONNECTOR, Line cord female (NOTE*)	1	B
-5	013012	CABLE, Changeover	1	

*NOTE: 566X Models are supplied with a line cord, but a female connector is also supplied.

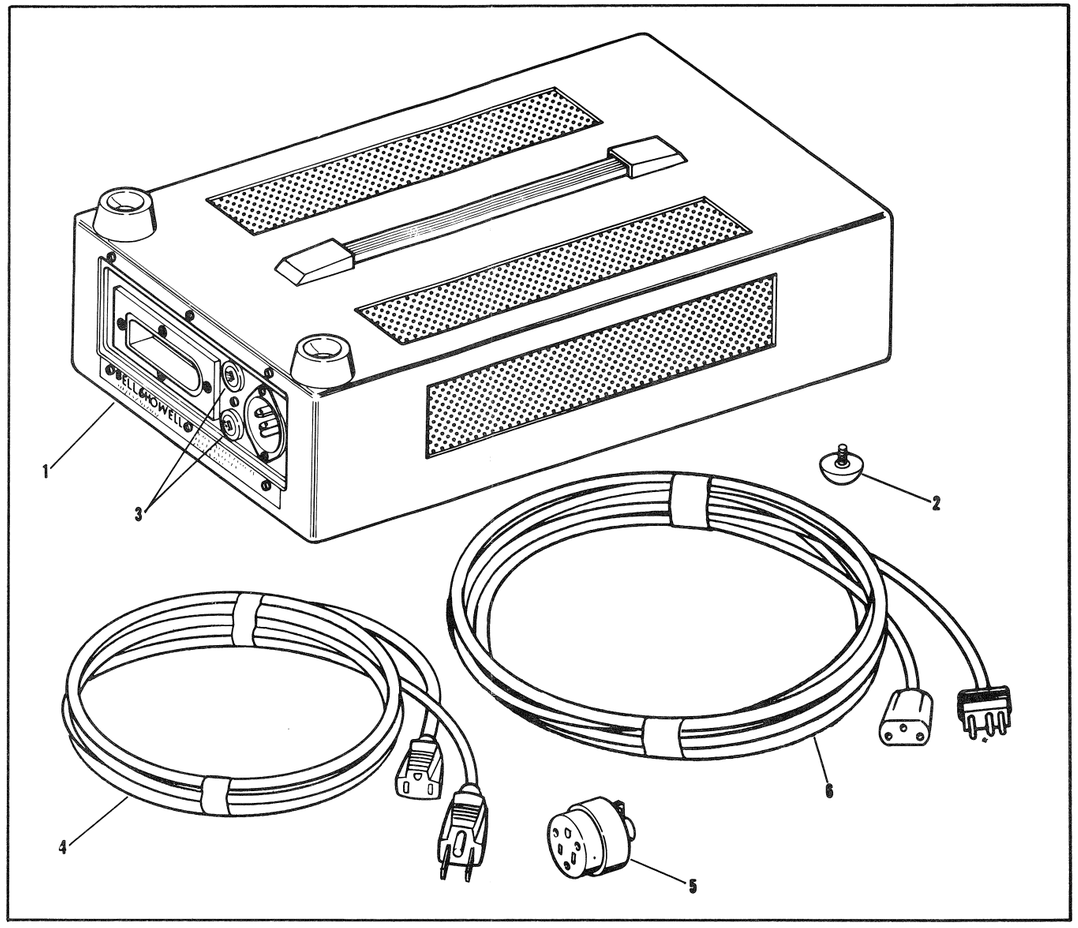

Figure 1. Lamp Supply Unit Assembly

FIG. & INDEX NO.	PART NO.	DESCRIPTION 1 2 3 4 5 6 7	UNITS PER ASSY	USABLE ON CODE
		FRONT AND BACK COVERS		
2-	013018	COVER ASSEMBLY, Front	1	
-1	36989	. NAMEPLATE, Specialist	1	
-2	36988	. MOULDING, Panel	1	
-3	400422	. NAMEPLATE, Bell & Howell	1	
-4	36986	. PANEL, Front cover	1	
-5	36987	. SPACER, Chipboard	1	
-6	36051	. SCREW, Cover latch plate (truss head)	2	
-7	33390	. SPEED NUT, Latch plate	2	
-8	33383	. PLATE, Latch	1	
-9	40846	. CARD, Operating instructions	1	
-10	34798	. CUSHION	1	
-11	33373	. SCREW, Cover foot	4	
-12	33372	. FOOT, Cover	4	
-13	36051	SCREW, Rear cover attaching (truss head)	6	
2-	013019	COVER ASSEMBLY, Rear	1	
-14	09946	. GRILLE, Ventilation (rear)	1	
-15	33374	. BEZEL	1	
-16	39580	. PLATE, Cover	1	
-17	011175	. GRILLE, Ventilation (front)	1	
-18	40851	. GASKET, Round	2	
-19	40850	. GASKET, Square	1	
-20	40756	. LABEL, Tube replacement	1	
-21	40848	. NAMEPLATE, Changeover receptacle	1	
-22	39578	. BEZEL	2	
-23	40849	. NAMEPLATE, Circuit breaker	1	
-24	39579	. NAMEPLATE, External speaker	1	
-25	40969	. VOLTAGE LABEL*	1	B
-26	40970	. LINE CORD LABEL**	1	B

*Secured over Step "A" of instruction card 40846
**Secured over "Line Cord" note of instruction card 40846

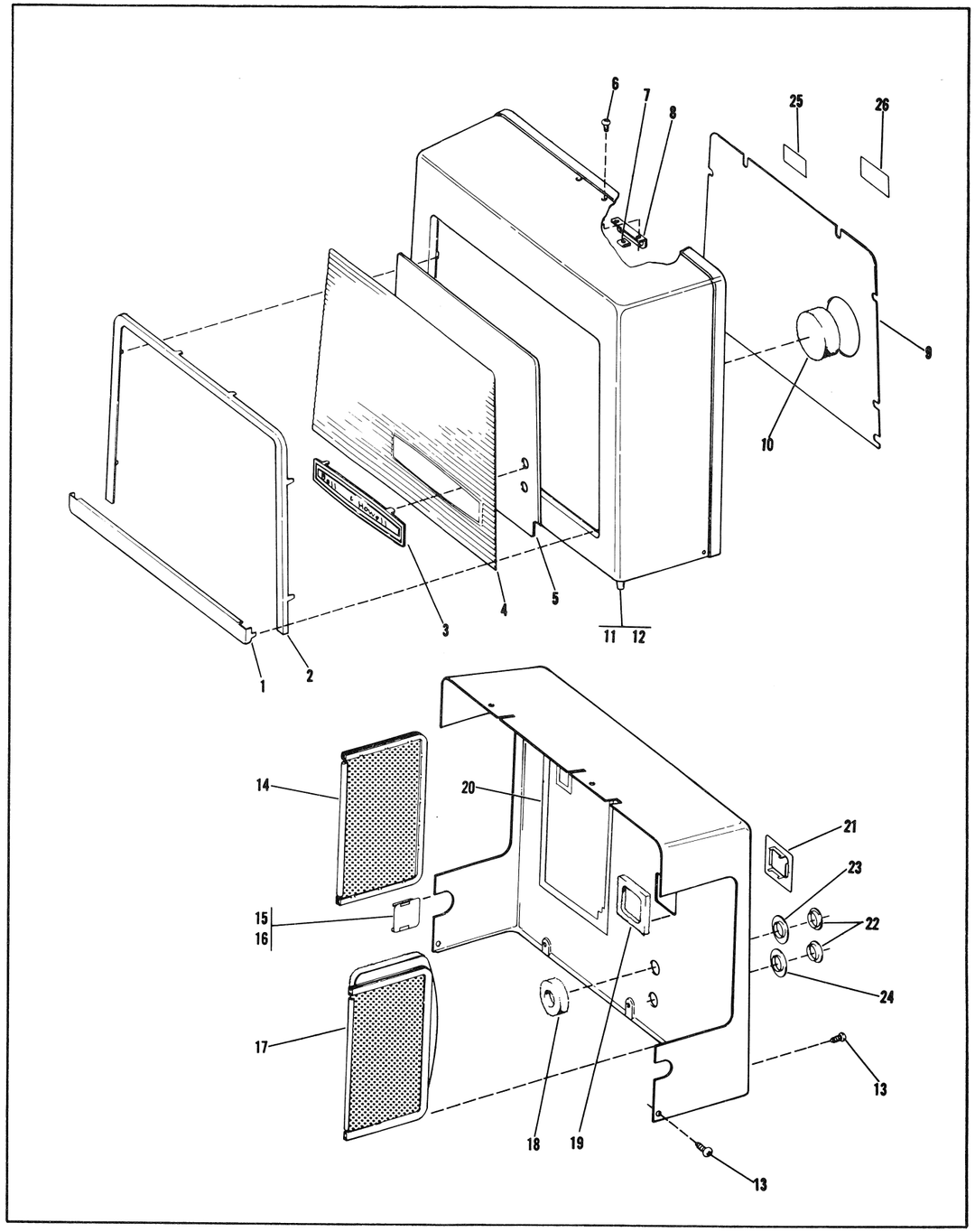

Figure 2. Front and Back Covers

FIG. & INDEX NO.	PART NO.	DESCRIPTION 1 2 3 4 5 6 7	UNITS PER ASSY	USABLE ON CODE
		PROJECTOR MAIN PLATE		
3-1	400476	MOLDING, Main plate	1	
-2	33391	SCREW, Carrying handle	2	
-3	33371	CAP, Carrying handle	1	
-4	33368	BODY, Carrying handle	1	
-5	33370	GRIP, Rubber	1	
-6	36052	SCREW, Carrying handle strap, (6-32 x 5/8 truss head)	2	
-7	36053	SCREW, Carrying handle strap, (8-32 flat head Sems)	2	
-8	36060	STRAP, Carrying handle	1	
-9	33300	SPACER, Handle strap (front end only)	2	
-10	33299	RING, Retaining (cover latch stud)	2	
-11	33301	STUD, Cover latch	2	
-12	09910	LEVER ASSEMBLY, Cover release	1	
-13	33302	SPRING, Release lever	1	
-14	31342	BELT, Take-up timing	1	
-15	24047	BELT, Take-up	1	
-16	36769	SETSCREW, Locking collar	2	
-17	36532	COLLAR, Clutch locking	1	
-18	012658	SPROCKET ASSEMBLY, Rewind	1	
-19	31237	WASHER, Nylon	4	
-20	012656	SPROCKET ASSEMBLY, Reverse take-up	1	
-21	21736	RING, Retaining	1	
-22	012654	SPROCKET ASSEMBLY, Take-up	1	
-23	31372	WASHER, Brass	5	
-24	36769	SETSCREW, Retaining collar	4	
-25	35811	COLLAR, Reel arm retaining	2	
-26	31358	DISC, Reel arm lock (front)	1	
-27	34765	DISC, Reel arm lock (rear)	1	
-28	09849	REEL ARM ASSEMBLY, Front (see figure 9 for breakdown)	1	
-29	03980	REEL ARM ASSEMBLY, Rear (see figure 10 for breakdown)	1	
-30	31370	WASHER, Bronze	2	
-31	33491	SPRING, Tension	1	
-32	31943	SCREW, Film cutter	2	
-33	09808	CUTTER ASSEMBLY, Film	1	
-34	36059	SPRING, Cutter arm	1	
-35	09804	ARM ASSEMBLY, Film cutter	1	
-36	36030	LABEL, Auto-load position	1	
-37	40869	NAMEPLATE, Projector	1	A
-38	40965	NAMEPLATE, Projector	1	B
-39	707026	SCREW	2	
-40	18086	FOOT, Rubber	4	
-41	40891	SHIELD, Base	1	
-42	31491	SCREW	1	
-43	39352	CLAMP, Cable	1	
-44	707026	SCREW	1	
-45	15563	WASHER, Lock	1	
-46	302097	WASHER	1	
-47	40892	CLAMP, Cable	1	
-48	40845	POWER CORD ASSEMBLY, Projector	1	

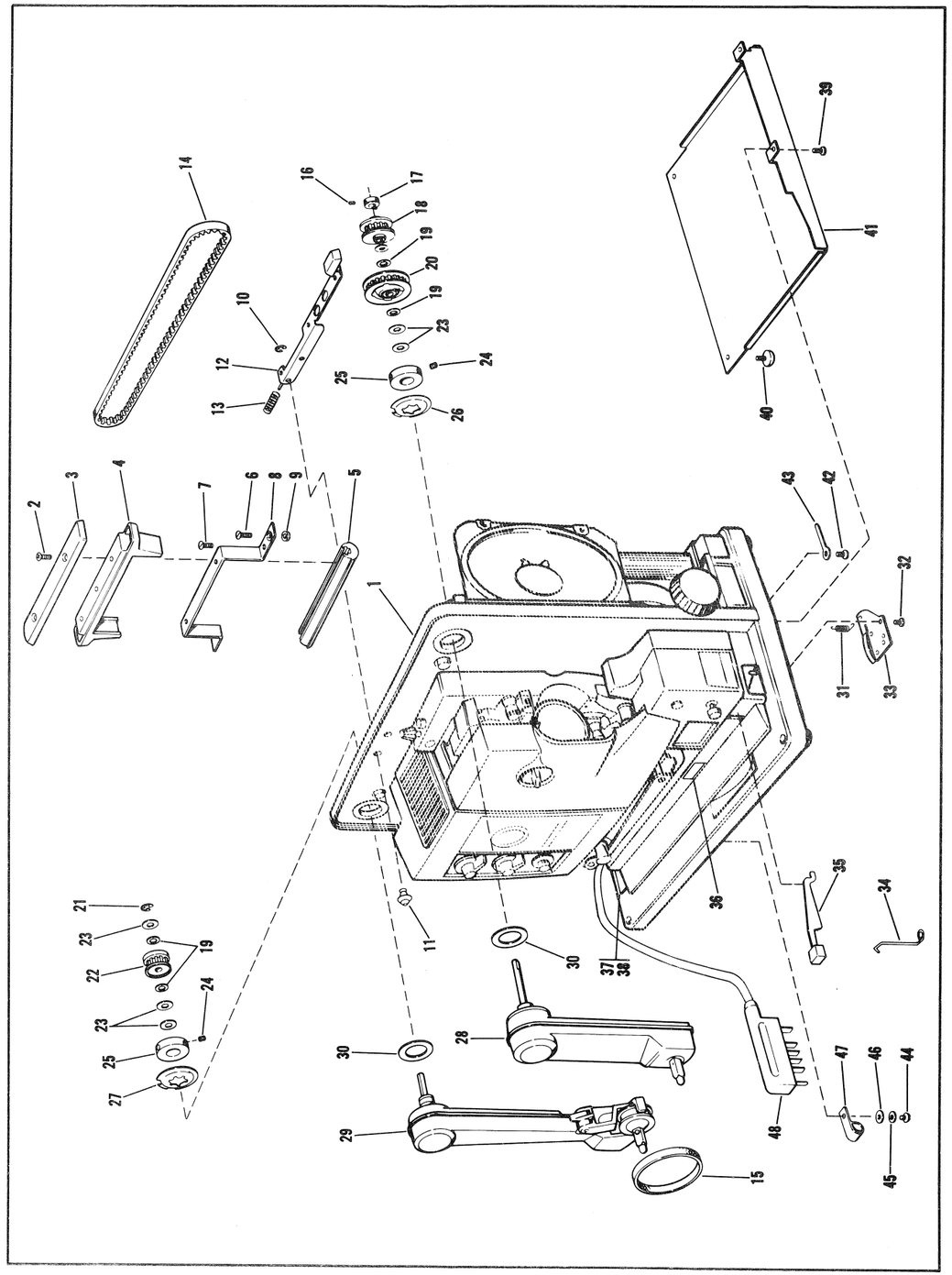

Figure 3. Projector Main Plate

(FIG. 3)

FIG. & INDEX NO.	PART NO.	DESCRIPTION 1 2 3 4 5 6 7	UNITS PER ASSY	USABLE ON CODE
		PROJECTOR MAIN PLATE		
4-1	30164	SCREW, Lamphouse attaching	3	
-2	No Number	LAMPHOUSE ASSEMBLY, (see figure 13 for breakdown)	1	
-3	40864	NAMEPLATE, Lamp designation	1	
-4	36763	SETSCREW, Projector control knob	2	
-5	011946	KNOB, Projector control	2	
-6	09896	KNOB, Volume control	1	
-7	09887	KNOB, Tone control	1	
-8	31551	SCREW, Switch attaching	2	
-9	14350	LOCKWASHER	2	
-10	40865	BRACKET, Switch mounting	1	
-11	013020	SWITCH SHIELD ASSEMBLY	1	
-12	40868	SWITCH, Fan, lamp	1	
-13	31943	SCREW, Switch nameplate	3	
-14	013023	NAMEPLATE, Switch	1	
-15	430076	LAMP, Pilot	1	
-16	31930	SCREW, Bracket assembly	2	
-17	013022	BRACKET ASSEMBLY, Pilot lamp	1	A
-17	012314	BRACKET ASSEMBLY, Pilot lamp	1	B
-17A	19025	. RIVET, Pilot lamp socket	1	
-17B	012555	. SOCKET ASSEMBLY, Pilot lamp	1	A
-17B	33262	. SOCKET, Pilot lamp	1	B
-17C	40958	BAFFLE, Felt	1	
-18	36841	SCREW, Lamp shield attaching	2	
-19	40870	SHIELD, Lamp	1	
-20	40863	SWITCH, Pushbutton change over	1	
-21	40862	NAMEPLATE, Change over switch	1	
-22	36841	SCREW, Cord clip attaching	1	
-23	40950	CLIP, Cord	1	
-24	30164	SCREW, Pulley shield attaching	2	
-25	40871	SHIELD, Pulley	1	
-26	40942	CLIP, Lamp retainer, upper	1	
-27	40802	CLIP, Lamp retainer, lower	1	
-28	40836	LAMP, Projector, enclosed arc	1	
-29	31930	SCREW, Lamp bracket	2	
-30	40801	BRACKET, Lamp	1	
-31	31943	SCREW, Bracket to pilot bracket	2	
-32	40873	BRACKET, Connector mounting	2	
-33	40957	FASTENER, Connector to bracket	1	
-34	40844	CONNECTOR, Lamp	1	

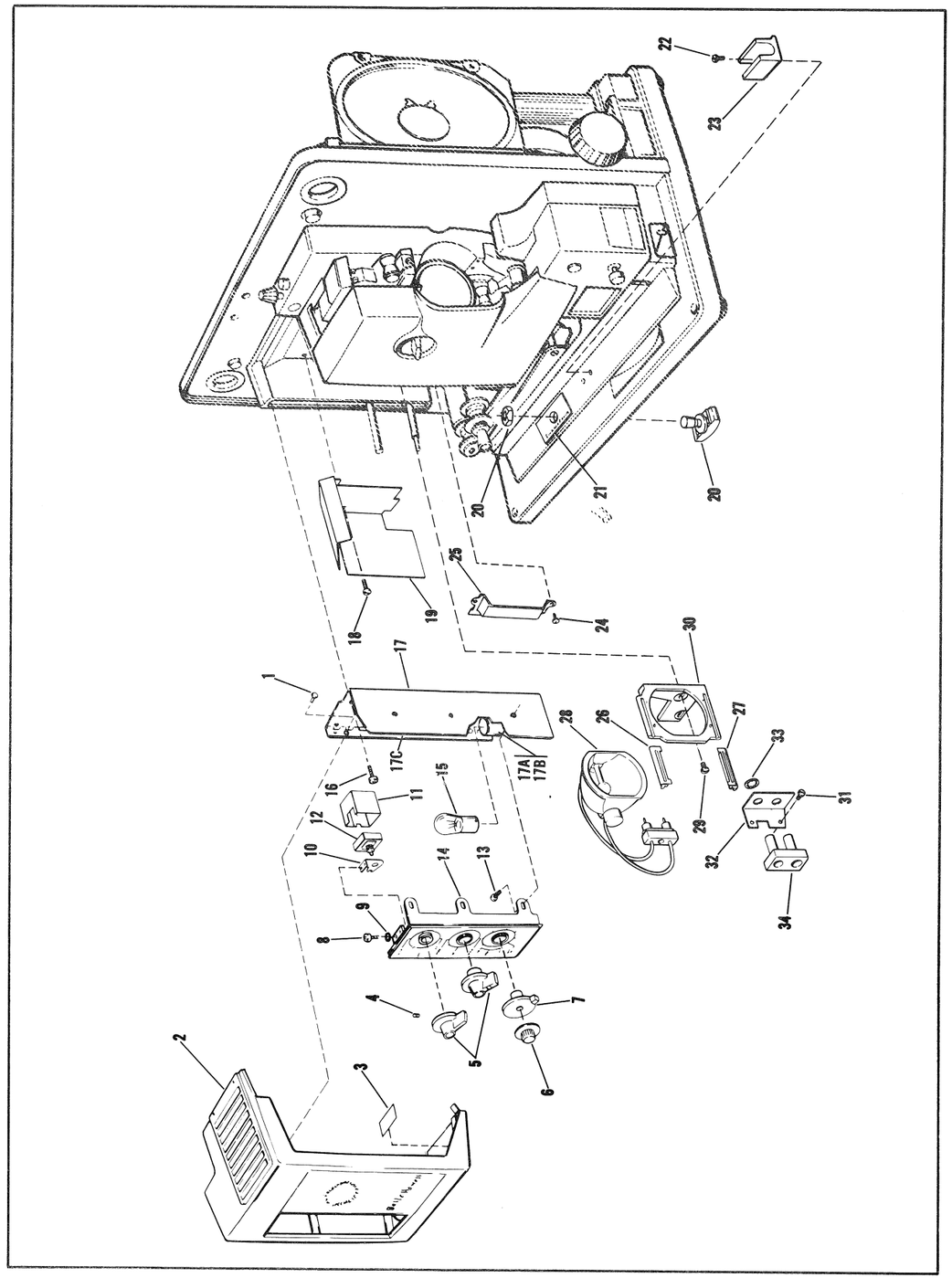

Figure 4. Projector Main Plate

(FIG. 4)

FIG. & INDEX NO.	PART NO.	DESCRIPTION 1 2 3 4 5 6 7	UNITS PER ASSY	USABLE ON CODE
		PROJECTOR MAIN PLATE		
5-1	31493	SCREW, Speaker bracket	1	
-2	31499	SCREW, Speaker mounting	2	
-3	33390	NUT, Push on	2	
-4	09810	SPEAKER ASSEMBLY	1	
-5	39554	CONDENSER, Wire wound	1	
-6	31928	SCREW, Starting capacitor	1	
-7	601190	NUT, Hex	1	
-8	31503	CLAMP, Starting capacitor	1	
-9	31266	CAPACITOR, Starting	1	A
-9	41302	CAPACITOR, Starting	1	B
-10	34899	SCREW, Motor relay	2	
-11	601190	NUT, Hex	2	
-12	33427	RELAY, Motor (see inset, figure 6)	1	
-12	36520	RELAY, Motor (see inset, figure 6)	1	
-13	31049	SCREW, Relay bracket	2	
-14	31914	BRACKET, Relay	1	
-15	31049	SCREW, Idler assembly attaching	3	
-16	31499	SCREW	1	
-17	21238	WASHER	1	
-18	09768	IDLER ASSEMBLY	1	
-19	36083	. RING, Retaining	1	
-20	611107	. ROLLER, Idler	1	
-21	09769	IDLER ASSEMBLY	1	
-22	36083	. RING, Retaining	1	
-23	611107	. ROLLER, Idler	1	
-24	39752	SCREW, Sems, flat head	4	
-25	38207	BRACKET, Reel arm lock	1	
-26	31231	SPRING, Reel arm lock	1	
-27	09888	PLUNGER ASSEMBLY, Reel arm lock	1	
-28	31265	STRAP, Motor bracket (includes screw & nut)	2	
-29	34900	SPRING, Motor discharge	1	
-30	09817	MOTOR ASSEMBLY, Drive 60 cycle (includes 30A through 30D)	1	A
-30A	33428	. MOTOR, Drive 60 cycle (GE 5KCM49EG135)	1	A
-30B	70345	. SUPPORT, Cushion (motor)	2	
-30C	28820	. TERMINAL, Tab snap-on	2	
-30D	32093	. TERMINAL, Flag snap-on	2	
-30	011893	MOTOR ASSEMBLY, Drive 50/60 cycle (includes 30B through 30D)	1	AB
-30A	36068	. MOTOR, Drive 50/60 cycle (Robbins & Myer #FR-KL-E26A0TS)	1	AB
-30	012312	MOTOR ASSEMBLY, Drive 50 cycle (includes 30B through 30D)	1	B
-30A	41301	. MOTOR, 50 cycle (Robbins & Myer #FR-KL-G26A0TS)	1	B
-31	39575	TUBE, Insulation	1	
-32	40948	BELT, Flat drive	1	
-33	36763	SETSCREW, Motor pulley	2	
-34	Note*	PULLEY, Motor	1	
-35	399023	SCREW, Motor bracket	4	
-36	31263	BRACKET, Motor mounting	2	A
-36	31263	BRACKET, Motor mounting	1	B
-36	39525	BRACKET, Motor mounting	1	B
-36B	40876	BRACKET, Terminal board mounting	1	A
-36C	36802	SCREW	2	A
-36D	40888	BOARD, Terminal	1	A
-36E	82797	CONNECTOR	1	B
-36F	41303	BRACKET, Stability	1	B
-37	700136	SCREW, Power supply attaching	3	
-38	013015	AMPLIFIER POWER SUPPLY ASSEMBLY (see fig. 22 for detail)	1	A
-38	012305	AMPLIFIER POWER SUPPLY ASSEMBLY (see fig. 22 for detail)	1	B
-39	700008	SCREW	1	
-40	600735	WASHER	1	
-41	40814	SPRING, Grounding	1	

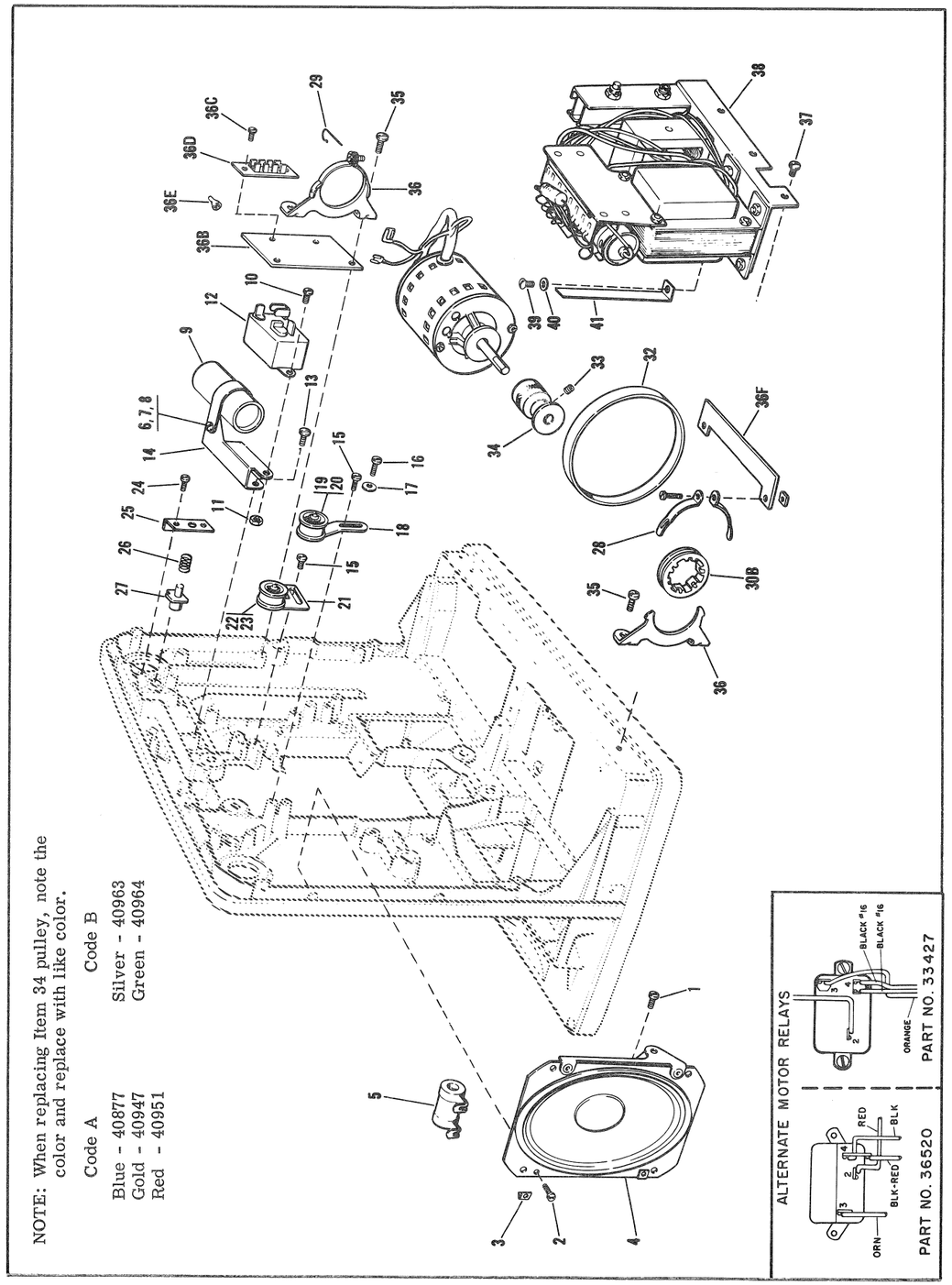

Figure 5. Projector Main Plate

(FIG. 5)

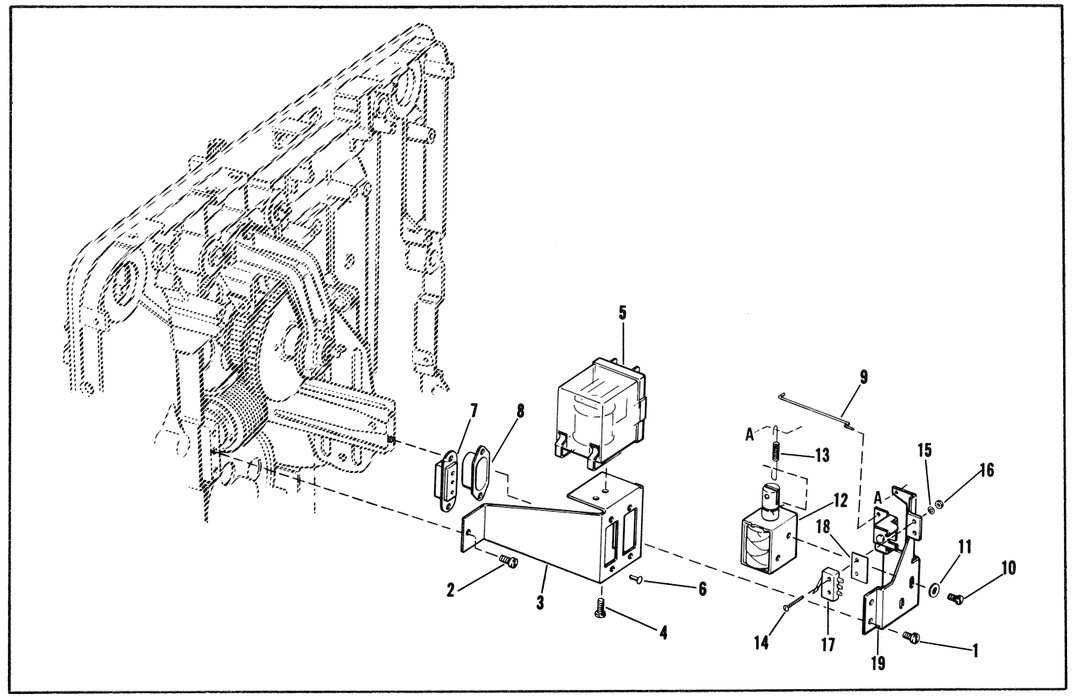

Figure 6. Projector Main Plate

FIG. & INDEX NO.	PART NO.	DESCRIPTION 1 2 3 4 5 6 7	UNITS PER ASSY	USABLE ON CODE
		PROJECTOR MAIN PLATE		
6-1	36802	SCREW, Bracket mounting	2	
-2	36801	SCREW, Bracket mounting	1	
-3	40890	BRACKET, Receptacle mounting	1	
-4	36841	SCREW, Relay mounting	1	
-5	40885	RELAY, A. C. enclosed	1	A
-5	40971	RELAY, A. C. enclosed	1	B
-6	36909	RIVET, Receptacle mounting	4	
-7	40887	RECEPTACLE, Female, 3 pin	1	
-8	40886	RECEPTACLE, Male, 3 pin recessed polarized	1	
-9	40879	ROD, Clevis	1	
-10	706964	SCREW, Solenoid attaching	2	
-11	14175	WASHER	2	
-12	013024	RIVET AND SOLENOID ASSEMBLY	1	A
-12	012306	RIVET AND SOLENOID ASSEMBLY	1	B
-13	40880	SPRING, Extension	1	
-14	33785	SCREW, Switch attaching	2	
-15	32943	LOCKWASHER	2	
-16	900349	NUT	2	
-17	40884	SWITCH, Subminiature SPDT leaf actuated	2	
-18	40878	INSULATOR	2	
-19	013021	CLEVIS AND BRACKET ASSEMBLY	1	

(FIG. 6)

FIG. & INDEX NO.	PART NO.	DESCRIPTION 1 2 3 4 5 6 7	UNITS PER ASSY	USABLE ON CODE
		PROJECTOR MAIN PLATE		
7-1	09901	SHIELD ASSEMBLY	1	
-1A	31550	. SCREW, Latch spring	1	
-1B	31609	. SPRING, Latch	1	
-1C	31049	. SCREW	2	
-1D	31610	. BRACKET, Hinge	1	
-1E	33359	. SHIELD	1	
-1F	34878	. WASHER, Spacer	AR	
-1G	36069	. SPRING, Cover retaining	1	
-1H	36070	. NAMEPLATE, Cover	1	
-2	399026	SCREW, Mechanism assembly attaching	4	
-3	31243	WASHER, Steel	4	
-4	No Number	MECHANISM ASSEMBLY (see figures 14 through 17 for breakdown)	1	
-5	31476	NUT, Flywheel	1	
-6	40882	SPACER, Flywheel	1	
-7	40883	FLYWHEEL	1	
-8	31017	WASHER, Flat	1	
-9	31491	SCREW, Binding head, soundhead attaching (rear)	2	
-10	31243	WASHER	2	
-11	31491	SCREW, Binding head, soundhead attaching (front)	2	
-12	012552	SOUNDHEAD (see figure 11 for breakdown)	1	
-13	31550	SCREW, Term. mtg.	1	
-14	30164	SCREW, Idler roller	1	
-15	35861	STUD, Film guide mounting	1	
-16	35852	GUIDE, Film	1	
-17	35862	SPACER	1	
-18	39523	ROLLER, Idler	1	
-19	36035	HANDLE, Snubber	1	
-20	36033	INSERT, Number 5	1	
-21	39523	ROLLER, Idler	1	
-22	97509	RING, Retaining	1	
-23	011222	SHAFT ASSEMBLY, Snubber roller	1	
-24	35859	SPRING, Snubber	1	
-25	35858	RETAINER, Snubber spring	1	
-26	35856	COVER, Snubber spring	1	
-27	35860	POST, Snubber mounting	1	
-28	705972	WASHER, Shim	AR	
-29	35886	NAMEPLATE, Snubber threading	1	
-30	39787	CLAMP, Cable	1	

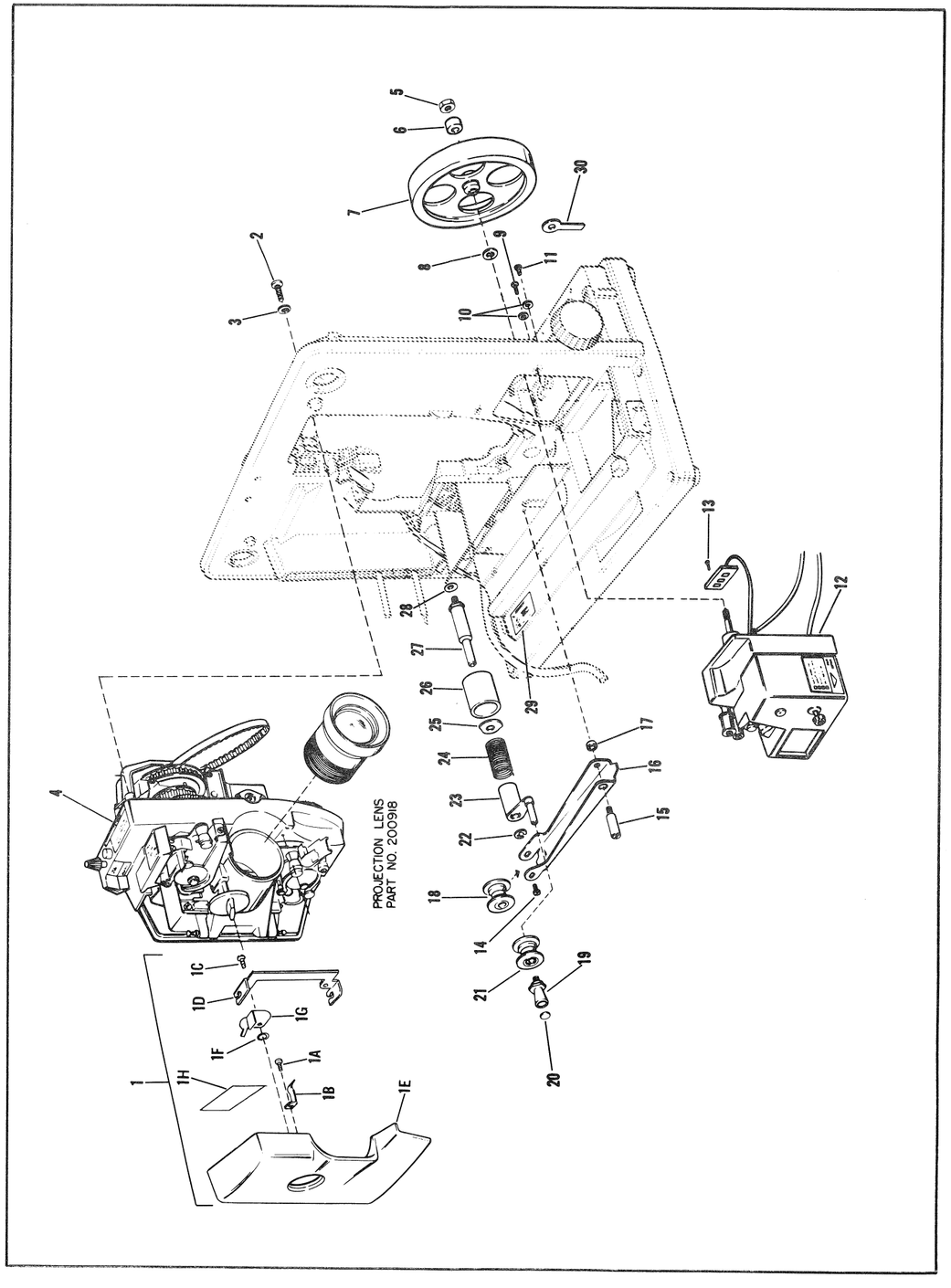

Figure 7. Projector Main Plate

(FIG. 7)

FIG. & INDEX NO.	PART NO.	DESCRIPTION 1 2 3 4 5 6 7	UNITS PER ASSY	USABLE ON CODE
		PROJECTOR MAIN PLATE		
8-1	600803	SCREW, Switch bracket	2	
-2	600797	WASHER, Lock	2	
-3	31923	BRACKET, Rotary switch	1	
-4	40954	SWITCH, Rotary	1	
-5	41110	STRAP	1	
-6	36801	SCREW, Strap fastener	1	
-7	36797	SCREW	1	
-8	34784	WASHER	1	
-9	40889	SHIELD	1	
-10	40881	SPACER, Shield	1	
-11	34833	SCREW, Amplifier mounting	3	
-12	34834	WASHER, Flat	3	
-13	013032	AMPLIFIER ASSEMBLY (see figure 22 and 23 for breakdown)	1	
-14	36801	SCREW, Blower bracket	4	
-15	14175	WASHER, Lock	4	
-16	013004	BLOWER ASSEMBLY (see figure 13 for breakdown)	1	A
-17	013038	BLOWER ASSEMBLY (see figure 13 for breakdown)	1	B
-18	013034	DEFLECTOR, Air	1	
-19	36769	SETSCREW, Tilt knob	1	
-20	09902	KNOB, Tilt	1	
-21	34889	SCREW, Tilt bar	1	
-22	8179	WASHER, Lock	1	
-23	34766	BAR, Tilt	1	
-24	31561	FOOT, Rubber	2	
-25	36053	SCREW, Sems flat head	2	
-26	09803	MECHANISM ASSEMBLY, Tilt	1	
-26A	31567	. PIN, Spring	2	
-26B	31559	. RACK, Tilt	1	
-26C	31568	. PIN, Spring	1	
-26D	31565	. PINION, Tilt	1	
-26E	21736	. RING, Retaining	1	
-26F	31039	. WASHER, Flat	1	
-26G	34822	. WASHER, Spring	1	
-26H	31564	. GEAR, Tilt worm	1	
-26J	31039	. WASHER, Flat	1	
-26K	31563	. HOUSING, Tilt	1	
-27	39506	INSULATOR, Upper	1	
-28	39504	SWITCH, Interlock (includes mounting parts)	1	
-29	31928	SCREW, Interlock switch bracket	2	
-30	39517	BRACKET, Interlock switch	1	
-31	36052	SCREW, Adjusting, truss head	1	
-32	33495	NAMEPLATE, Interlock	1	
-33	39757	INSULATOR, Lower	1	
-34	31491	SCREW, Base to plate	3	
-35	31929	SCREW, Base to plate	2	
-36	No Number	PLATE AND BEARING ASSEMBLY	NP	
-37	40944	BASE, Projector	1	
-38	19037	NUT, Grounding screw	1	
-39	31493	SCREW, Cable grounding	1	
-40	40893	BUSHING, Snap	2	

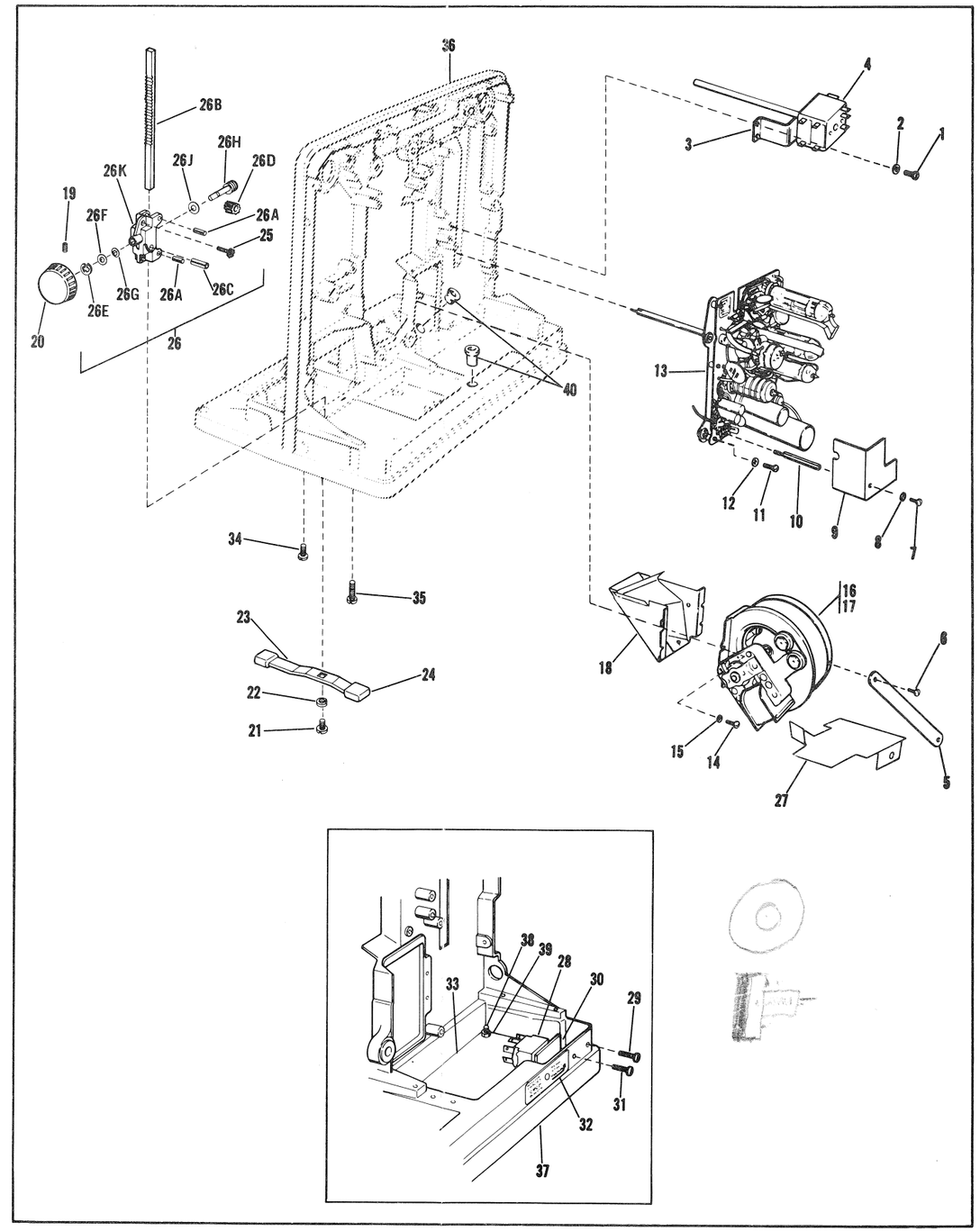

Figure 8. Projector Main Plate

FIG. & INDEX NO.	PART NO.	DESCRIPTION 1 2 3 4 5 6 7	UNITS PER ASSY	USABLE ON CODE
		FRONT REEL ARM ASSEMBLY		
9-	09849	REEL ARM ASSEMBLY, Front	REF	
-1	24270	. SCREW, Reel arm cover	2	
-2	14175	. WASHER, Lock	2	
-3	31361	. COVER, Front reel arm	1	
-4	34874	. WASHER, Steel (shim)	AR	
-5	31366	. PIN, Spring	1	
-6	31363	. COLLAR, Feed spindle	1	
-7	31365	. PIN, Straight	1	
-8	31364	. SPRING, Torsion	1	
-9	09776	. GEAR ASSEMBLY, Lower	1	
-10	31371	. WASHER, Brass	AR	
-11	34860	. WASHER, Thrust	1	
-12	36084	. WASHER (see service instructions)	AR	
-13	09774	. SPINDLE ASSEMBLY, Feed	1	
-14	31359	. WASHER, Steel	1	
-15	36769	. SETSCREW, Upper gear	2	
-16	011948	. GEAR ASSEMBLY, Upper	1	
	NPN	. SHAFT & DISC ASSEMBLY	REF	
-17	31369	. . SPRING, Clutch	1	
-18	24903	. . RING, Retaining clutch disc	2	
-19	36080	. . DISC ASSEMBLY, Clutch (acetal resin)	1	
-20	31356	. . SHAFT, Front reel arm	1	
-21	31372	. WASHER, Brass	2	
-22	34861	. WASHER, Tension	1	
-23	31245	. RING, Retaining	1	
-24	31241	. CLIP, Gear retaining	2	
-25	31239	. GEAR, Spur (lower)	1	
-26	33385	. GEAR, Spur (upper)	1	
-27	31243	. WASHER, Steel	1	
-28	31360	. SHAFT, Drive	1	
-29	31236	. BEARING, Nylon	2	
-30	17639	. RING, Retaining	2	
-31	31367	. SHOE, Friction	1	
-32	09778	. BRACKET ASSEMBLY, Friction shoe	1	
-33	09777	. DISC ASSEMBLY, Spline bearing	1	
-34	31370	. WASHER, Bronze	1	
-35	09752	. BEARING ASSEMBLY, Splined	1	
-35A	24042	. . BEARING, Needle	2	
-36	30171	. SCREW, Eccentric stop	1	
-37	34854	. SPRING, Brake	1	
-38	31368	. STOP, Eccentric	1	
-39	09775	. ARM AND BEARING ASSEMBLY, Front	1	
-39A	24042	. . BEARING, Needle	1	
-39B	31375	. . BEARING, Needle (closed end)	1	

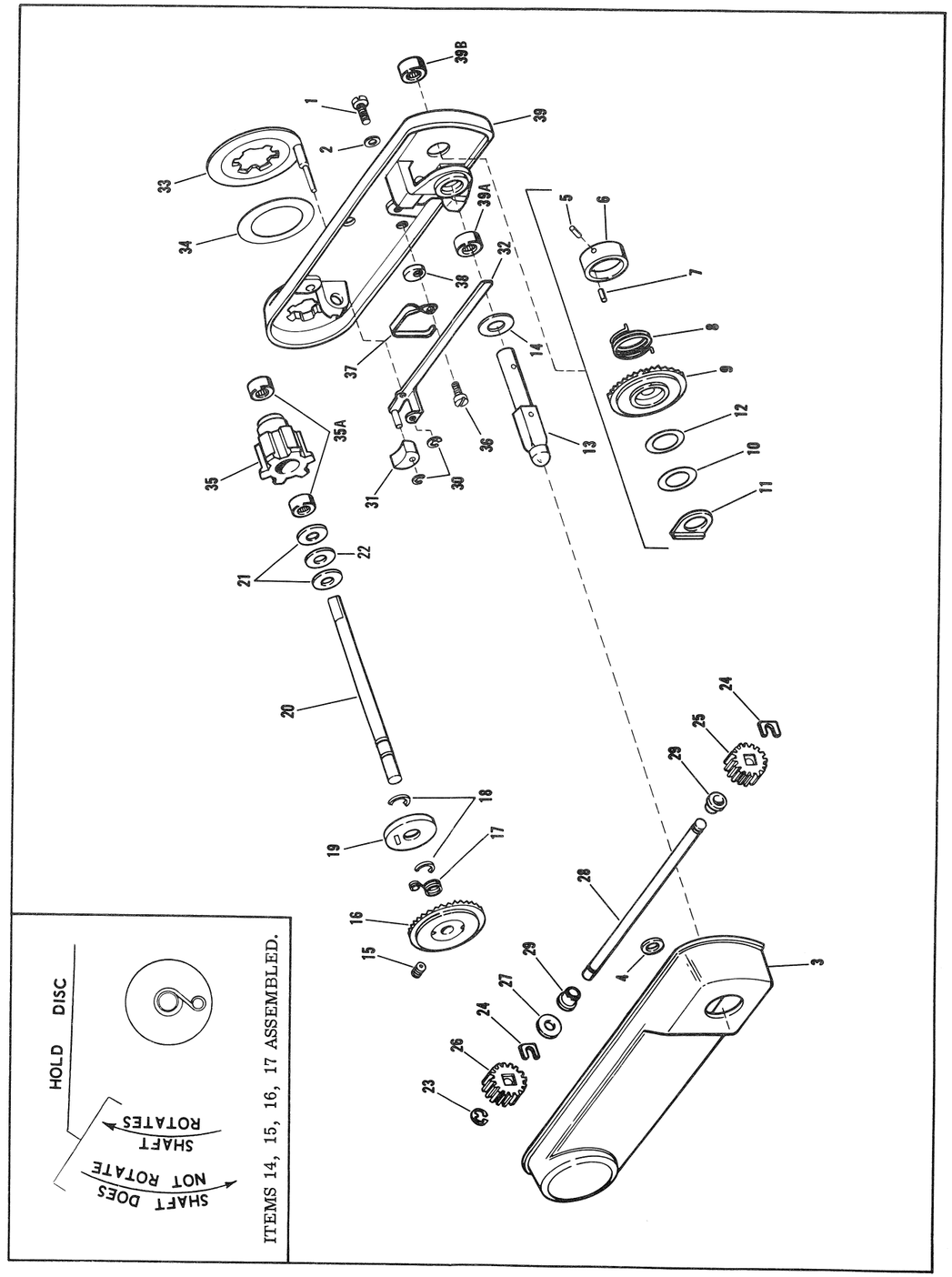

Figure 9. Front Reel Arm Assembly

(FIG. 9)

FIG. & INDEX NO.	PART NO.	DESCRIPTION (1 2 3 4 5 6 7)	UNITS PER ASSY	USABLE ON CODE
		REAR REEL ARM ASSEMBLY		
10-	03980	REEL ARM ASSEMBLY, Rear	REF	
-1	36038	. SPRING, Tension (take-up arm)	1	
-2	31247	. SCREW, Socket head	1	
-3	09753 014522	. SPINDLE AND PULLEY ASSEMBLY, Take-up	1	
-4	24043	. PIN, Take-up arm	1	
-5	09755	. ARM ASSEMBLY, Take-up	1	
-5A	24042	. . BEARING, Needle	2	
-6	24270	. SCREW, Reel arm cover	2	
-7	14175	. WASHER, Lock	2	
-8	31251	. COVER, Rear reel arm	1	
-9	31245	. RING, Retaining (upper spur gear)	1	
-10	31241	. CLIP, Gear retaining	2	
-11	31239	. GEAR, Spur (lower)	1	
-12	31239	. GEAR, Spur (upper)	1	
-13	31243	. WASHER, Steel	1	
-14	36083	. RING, Retaining (lower gear assembly)	1	
-15	011889	. PULLEY AND GEAR ASSEMBLY, Lower (with sleeve, item - 30)	1	
-16	31235	. BEARING, Nylon	2	
-17	31242	. PLUNGER, Spring	1	
-18	31246	. SPRING, Compression	1	
-19	33966	. RING, Retaining	1	
-20	36763	. SETSCREW, Rewind drive shaft	1	
-21	31234	. SHAFT, Rewind drive	1	
-22	31238	. SHAFT, Drive	1	
-23	31236	. BEARING, Nylon	2	
-24	36769	. SETSCREW, Upper gear assembly	2	
-25	011948	. GEAR ASSEMBLY, Upper	1	
-26	36085	. WASHER, Brass, 0.0025 inch thick (see service instructions)	AR	
-27	36086	. WASHER, Brass, 0.005 inch thick (see service instructions)	AR	
-28	40295	. SHAFT, Rear reel arm	1	
-29	09752	. BEARING ASSEMBLY, Splined	1	
-29A	24042	. . BEARING, Needle	2	
-30	~~36037~~	. SLEEVE, Rubber	1	
-31	31249	. ARM, Rear	1	
	045684			

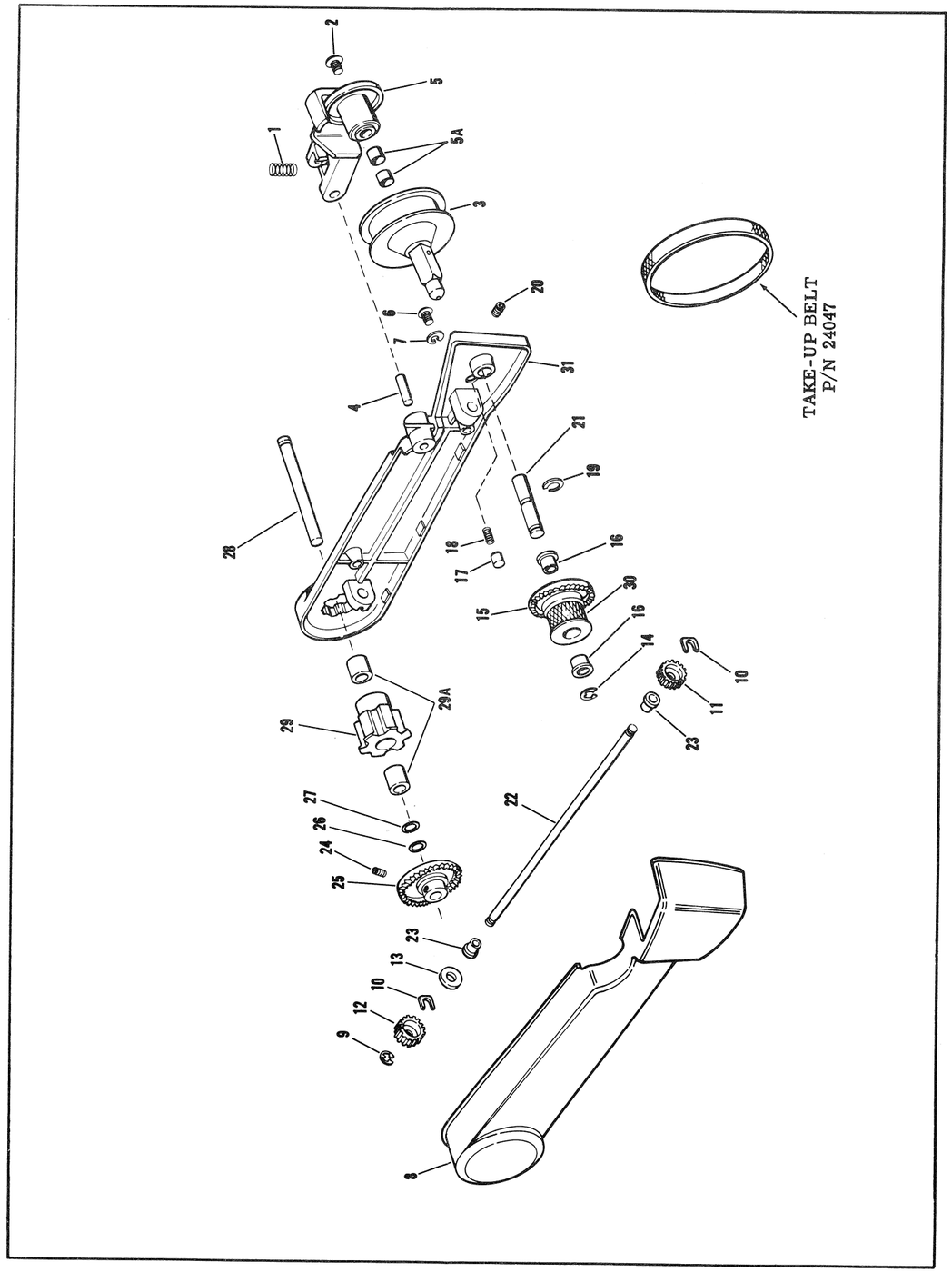

Figure 10. Rear Reel Arm Assembly

(FIG. 10)

FIG. & INDEX NO.	PART NO.	DESCRIPTION 1 2 3 4 5 6 7	UNITS PER ASSY	USABLE ON CODE
		SOUNDHEAD ASSEMBLY		
11-	012552	SOUNDHEAD ASSEMBLY	REF	
-1	011942	. COVER ASSEMBLY COMPLETE, Exciter lamp	1	
-2	20808	. . RING, Retaining	1	
-3	34837	. . SCREW, Cover retaining	1	
-4	31536	. . INSERT, Retaining screw	1	
-5	34787	. . RUBY, Indicating	1	
-6	30163	. . SCREW, Film guide	2	
-7	35823	. . GUIDE, Film	1	
-8	31643	. . NAMEPLATE, Film cutter	1	
-9	36094	. . BAFFLE, Lite	1	
-10	34884	. LAMP, Exciter ASA Code BAK	1	
-11	34892	. NAMEPLATE, Exciter lamp	1	
-12	24271	. SCREW, Clamping	1	
-13	020240	. SLIT ASSEMBLY, Optical	1	
-14	31671	. RING, Retaining	1	
-15	31630	. SCREW, Guide roller adjusting	1	
-16	31638	. SCREW, Lamp contact	1	
-17	09828	. CONTACT ASSEMBLY, Exciter lamp	1	
-18	012558	. LEADWIRE ASSEMBLY, Lamp contact	1	
-19	31636	. RING, Lamp release	1	
-20	36765	. SETSCREW, Light pipe locking, 6-32 by 1/4 inch	1	
-21	36668	. SCREW, Sems pan head	2	
-22	011203	. SOUND DRUM AND SHAFT ASSEMBLY	1	
-23	31669	. RETAINER, Light pipe	1	
-24	011244	. LIGHT PIPE AND SILICON CELL ASSEMBLY	1	
-25	39551	. BOARD, Terminal, silicon cell	1	
-26	09826	. SCREW ASSEMBLY, Edge guide	1	
-27	30163	. SCREW, Film guide roller	2	
-28	31674	. WASHER, Steel	2	
-29	09834	. ROLLER, Flanged	1	
-30	09835	. ROLLER, Plain with shoulders	1	
-31	31673	. SPRING, Counter balance	1	
-32	30164	. SCREW, Spring terminal	1	
-33	31675	. TERMINAL, Spring	1	
-34	30164	. SCREW, Stabilizer arm	2	
-35	31569	. ARM ASSEMBLY, Stabilizer	1	
-36	09832	. ARM ASSEMBLY, Stabilizer, lower	1	
-37	39789	. SPRING, Stabilizer arm	1	
-38	09838	. ARM ASSEMBLY, Stabilizer, upper	1	
-39	012363	. HOUSING ASSEMBLY, Soundhead	1	
-39A	613394	. . COLLAR, Exciter lamp pin	3	
-39B	31668	. . PIN, Exciter lamp	3	
-39C	602339	. . SPRING, Pre-focus lamp socket pin	3	
-40	31766	. TERMINAL, Lug	2	

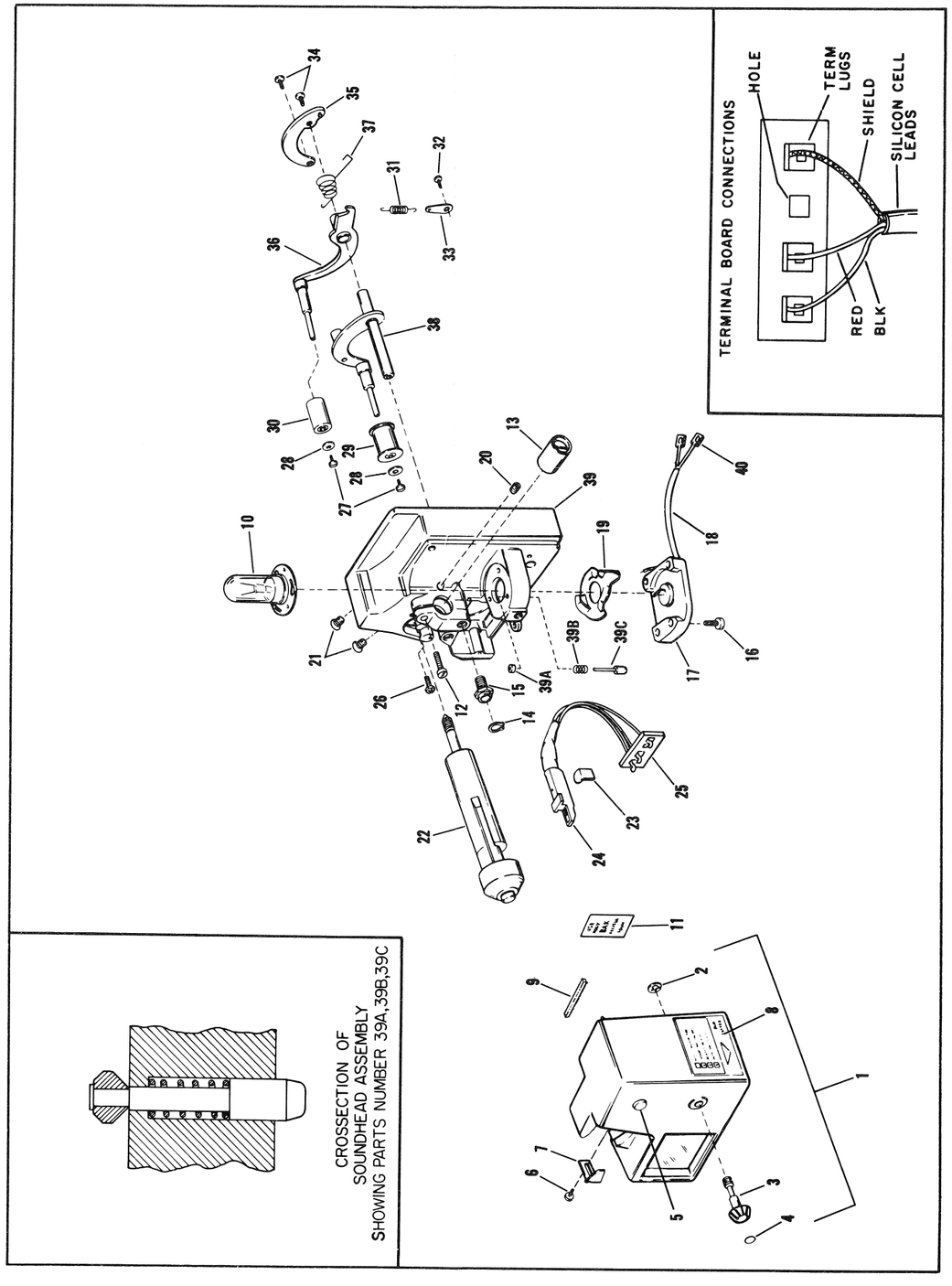

Figure 11. Soundhead Assembly

(FIG. 11)

FIG. & INDEX NO.	PART NO.	DESCRIPTION 1 2 3 4 5 6 7	UNITS PER ASSY	USABLE ON CODE
		LAMPHOUSE ASSEMBLY		
12-	No Number	LAMPHOUSE ASSEMBLY, Complete	REF	
-1	40861	. NAMEPLATE, Specialist high intensity arc	1	
-2	36836	. SCREW, Heat reflector attaching	2	
-3	40867	. REFLECTOR, Heat	1	
12-	011160	. LAMPHOUSE SUBASSEMBLY	1	
-4	33361	. . HOUSING, Lamp	1	
-5	36100	. . RIVET, Grille attaching	2	
-6	33306	. . GRILLE, Lamphouse	1	
-7	36026	. . HANDLE, Lamphouse	1	
-8	09806	. . LATCH, Lamphouse	1	
-9	33488	. . GUARD, Film	1	
-10	36094	. . BAFFLE	1	
-11	40864	. NAMEPLATE, Lamp designation	1	
		BLOWER AND MOTOR ASSEMBLY		
13-	013004	BLOWER AND MOTOR ASSEMBLY	REF	A
13-	013038	BLOWER AND MOTOR ASSEMBLY	REF	B
-1	40824	. STUD, Motor support	4	
-2	28718	. WASHER	4	
-3	013006	. MOTOR AND BRACKET ASSEMBLY, 60 Cycle	1	A
-3	40973	. MOTOR, 50 Cycle (NOTE*)	1	B
-4	40823	. WHEEL, Blower, and setscrew	1	A
-4	40966	. WHEEL, Blower	1	B
-5	013005	. HOUSING, Blower	1	A
-5	013040	. HOUSING, Blower	1	B
-6	39177	. GROMMET	4	
-7	36806	. SCREW, Bracket mtg. (NOTE*)	4	B
-8	26906	. NUT, Bracket mtg. (NOTE*)	4	B
-9	40821	. BRACKET, Motor mtg. (NOTE*)	2	B

*NOTE: The 50 cycle motor 40973 used in 566X model is attached to mounting brackets by screws and nuts. Mounting brackets are riveted to the 60 cycle motor in 566A model.

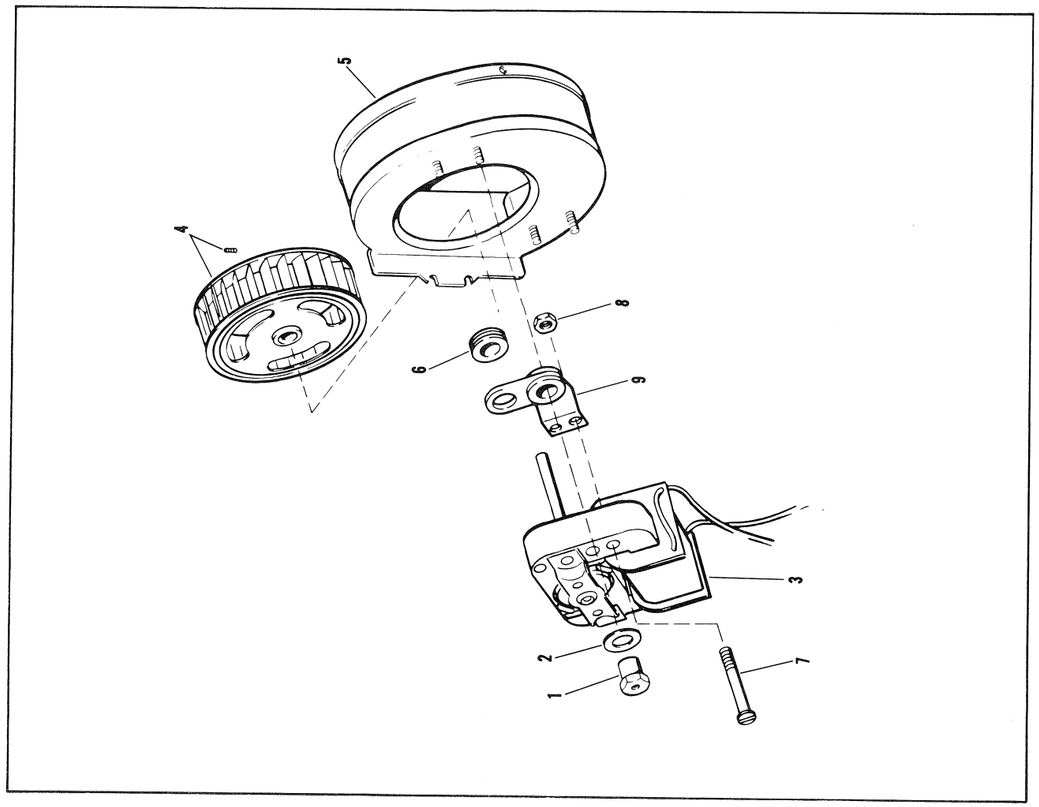

Figure 13. Blower and Motor Assembly

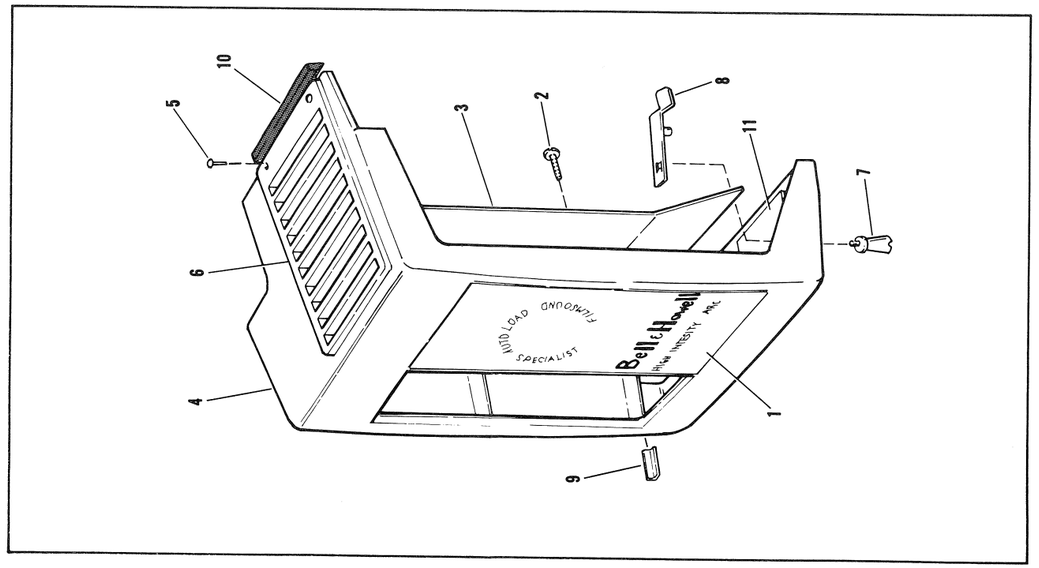

Figure 12. Lamphouse Assembly

(FIGS. 12, 13)

FIG. & INDEX NO.	PART NO.	DESCRIPTION 1 2 3 4 5 6 7	UNITS PER ASSY	USABLE ON CODE
		MECHANISM ASSEMBLY		
14-	No Number	MECHANISM ASSEMBLY, Complete	REF	
-1	31958	. PIN, Hinge (upper)	1	
-2	31957	. PIN, Hinge (lower)	1	
-3	31019	. WASHER, Spring	1	
-4	31020	. WASHER, Flat	1	
-5	09899	. LENS CARRIER ASSEMBLY (see figure 19 for breakdown)	1	
-6	20808	. RING, Retaining	1	
-7	012135	. THREADING BAR ASSEMBLY	1	
-7A	36062	. . NAMEPLATE, System restorer	1	
-8	31049	. SCREW, Hood	2	
-9	37305	. HOOD	1	
-10	31536	. INSERT	1	
-11	36016	. SCREW, Outboard bearing (sems)	3	
-12	17639	. RING, Retaining	2	
-13	38167	. SHAFT, Clutch lever	1	
-14	09721	. BEARING ASSEMBLY, Outboard (includes following parts)	1	
	31906	. . RIVET	3	
	31121	. . RETAINER, Bearing	1	
	7994	. . BEARING	1	
	31120	. . RING, Felt	1	
-15	31041	. LEVER, Rewind clutch	1	
-16	31044	. BUTTON, Rewind	1	
-17	31042	. SPRING, Rewind button	1	
-18	31023	. BELT, Rewind timing	1	
-19	36083	. RING, Retaining	2	
-20	09724	. SPROCKET ASSEMBLY, Rewind drive	1	
-21	31039	. WASHER, Flat	1	
-22	31040	. SPRING, Compression	1	
-23	09730	. DRIVER ASSEMBLY, Spline	1	
-24	36769	. SETSCREW	2	
-25	012121	. SPROCKET ASSEMBLY, Take-up drive	1	
-26	24452	. SCREW, Sprocket guard	3	
-27	012333	. GUARD ASSEMBLY, Sprocket (see figure 18 for breakdown)	1	
-27A	36032	. . INSERT #4	1	
-28	30164	. SCREW, Sprocket guard	3	
-28A	34879	. WASHER, Shim	AR	
-28A	34878	. WASHER, Shim	AR	
-29	35814	. GUARD, Sprocket	2	
-29A	36999	. GUARD, Sprocket, upper (for sprocket item 36 only)	1	
-30	36081	. ROLLER	3	
-31	35830	. SPRING, Torsion	3	
-32	36771	. SETSCREW	4	
-33	012126	. GEAR ASSEMBLY, Sprocket	2	
-34	31015	. WASHER, Sprocket tension	2	
-35	011228	. SPROCKET ASSEMBLY, Upper	1	
-36	011226	. SPROCKET ASSEMBLY, Lower	1	
-37	35910	. FLANGE, Lower sprocket	1	
-38	31017	. WASHER, Thrust	2	

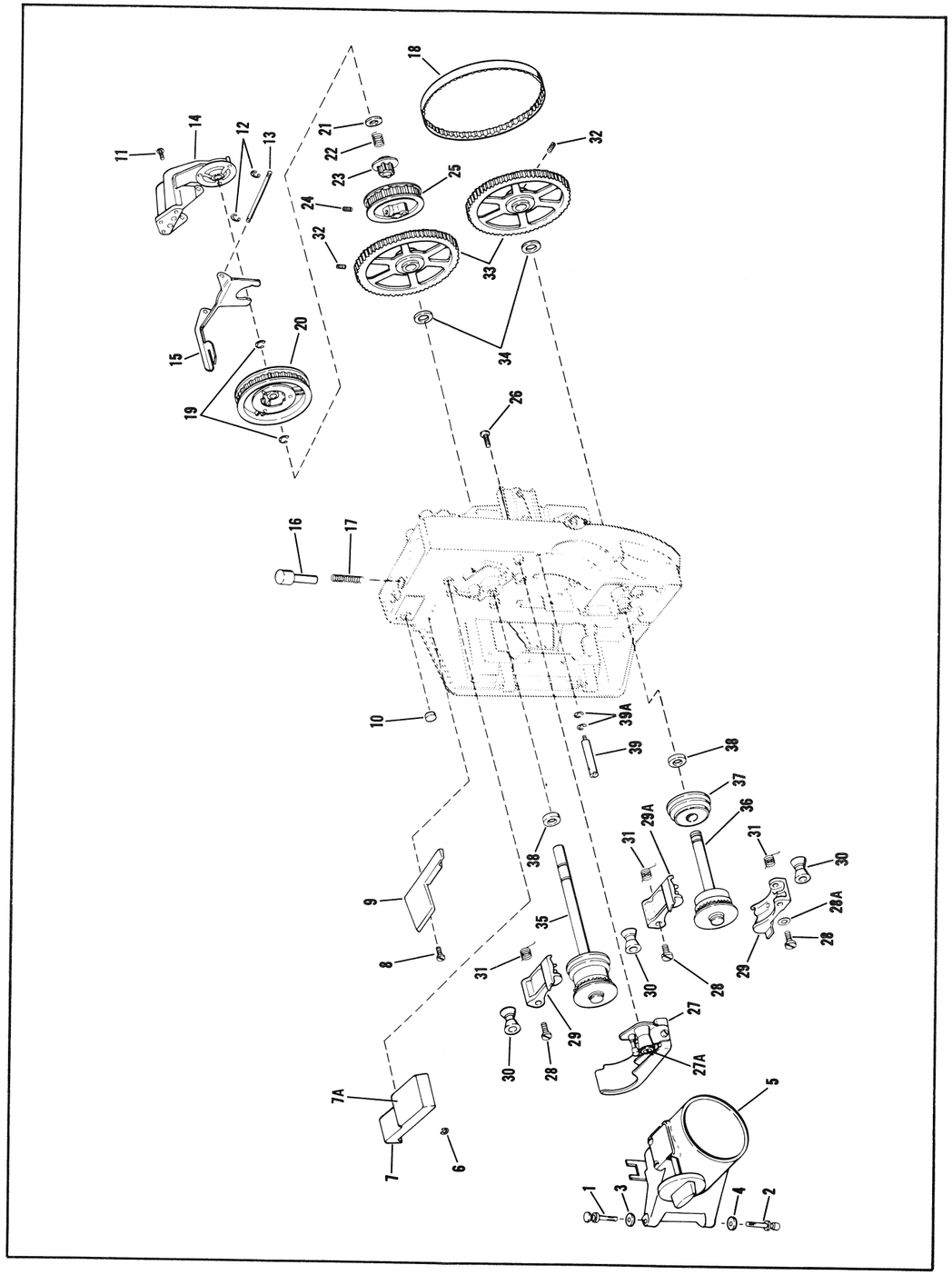

Figure 14. Mechanism Assembly

FIG. & INDEX NO.	PART NO.	1 2 3 4 5 6 7 DESCRIPTION	UNITS PER ASSY	USABLE ON CODE
		MECHANISM ASSEMBLY		
15-1	30164	. SCREW, Roller	3	
-2	36082	. ROLLER, Flanged	3	
-3	97509	. RING, Retaining	1	
-4	011245	. BRACKET AND HANDLE ASSEMBLY	1	
-4A	36031	. . INSERT #3	1	
-5	36023	. SPRING, Torsion	1	
-6	31049	. SCREW	1	
-7	35849	. GUIDE, Film exit	1	
-8	36061	. SCREW, Roller	1	
-9	35885	. ROLLER, Idler	1	
-10	31049	. SCREW	1	
-11	35863	. PIVOT, Locking lever	1	
-12	011220	. LEVER ASSEMBLY	1	
-13	17676	. RING, Retaining	1	
-14	35874	. FORM, Lower loop	1	
-15	35838	. SPRING, Torsion	1	
-16	31550	. SCREW	1	
-17	35867	. BUSHING, Release spring	1	
-18	35866	. SPRING, Release spring	1	
-19	31551	. SCREW	1	
-20	35822	. BRACKET, Back up	1	
-21	31413	. RING, Retaining	1	
-22	35834	. WASHER, Flat	2	
-23	35850	. GUIDE, Film, lower	1	
-24	31551	. SCREW	2	
-25	011213	. PLATE ASSEMBLY, Sprocket guard	1	
-26	011221	. LEVER AND PIVOT ASSEMBLY, Toggle	1	
-27	35846	. GUIDE, Film (upper)	1	
-28	17639	. RING, Retaining	1	
-29	303541	. SCREW	2	
-30	36018	. SPRING, Leaf	1	
-31	33347	. SETSCREW, Hex head	1	
-32	09789	. LEVER ASSEMBLY, Threading	1	
-33	17639	. RING, Retaining	1	
-34	011233	. FORM ASSEMBLY, Lower loop	1	
-35	31551	. SCREW	2	
-36	011212	. PLATE ASSEMBLY, Sprocket guard (upper)	1	
-37	31555	. SCREW	1	
-38	83663	. WASHER, Lock	1	
-39	31451	. WASHER, Flat	1	
-40	35820	. RETRACTOR, Shuttle	1	
-41	011218	. LINK AND STUD ASSEMBLY, Connecting	1	

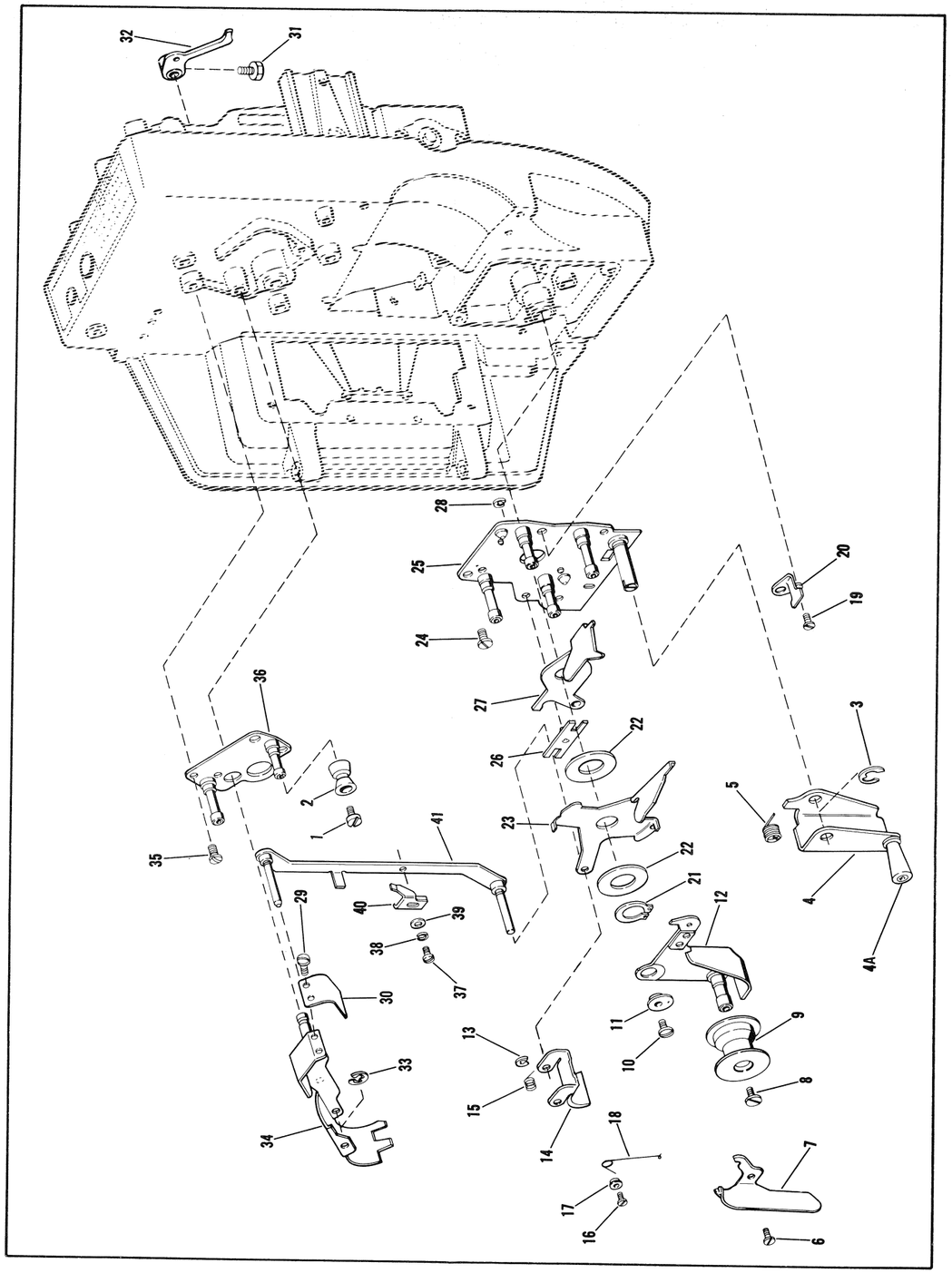

Figure 15. Mechanism Assembly

(FIG. 15)

FIG. & INDEX NO.	PART NO.	1 2 3 4 5 6 7 DESCRIPTION	UNITS PER ASSY	USABLE ON CODE
		MECHANISM ASSEMBLY		
16-1	30164	. SCREW, Roller	1	
-2	35840	. ROLLER, Plain	1	
-3	20808	. RING, Retaining	1	
-4	36763	. SETSCREW	2	
-5	012133	. KICKPLATE ASSEMBLY, Upper	1	
-6	34878	. WASHER, Flat	1	
-7	99828	. RING, Retaining	2	
-8	37303	. SHAFT, Locking pawl	1	
-9	37304	. SPRING, Torsion	1	
-10	30164	. SCREW, Locking pawl	1	
-11	37302	. PAWL, Locking	1	
-12	012134	. HUB ASSEMBLY, Pawl bracket	1	
-13	36801	. SCREW, Sems	2	
-14	21238	. WASHER, Flat	2	
-15	36044	. SPRING, Tension	1	
-16	011249	. CAM FOLLOWER AND SUPPORT ASSEMBLY	1	
-16A	31555	. . SCREW	2	
-16B	31474	. . BRACKET, Follower alignment	1	
-16C	36027	. . SPRING, Cam follower	2	
-16D	36099	. . DAMPER, Spring	1	
-16E	36047	. . FOLLOWER, Cam	1	
-16F	36028	. . SUPPORT, Cam follower	1	
-17	33347	. SCREW, Hex head	1	
-18	011250	. ARM ASSEMBLY	1	
-19	011219	. LEVER AND SHAFT ASSEMBLY	1	
-20	31551	. SCREW	2	
-21	31977	. WASHER, Lock	2	
-22	31020	. WASHER, Flat	2	
-23	011248	. SELF CENTERING ASSEMBLY	1	
-24	35869	. SPRING, Tension	1	
-25	011214	. SHAFT AND LINK ASSEMBLY, Upper loop form	1	
-26	31049	. SCREW, Aperture plate	2	
-27	No Number	. PLATE ASSEMBLY, Aperture (see figure 20 for breakdown)	NP	
-28	36801	. SCREW, Sems	1	
-29	34885	. CATCH, Lens carrier	1	
-30	13918	. WASHER, Flat	1	
-31	33260	. SCREW, Lens stop	1	
-32	31954	. NAMEPLATE, Framer rewind	1	

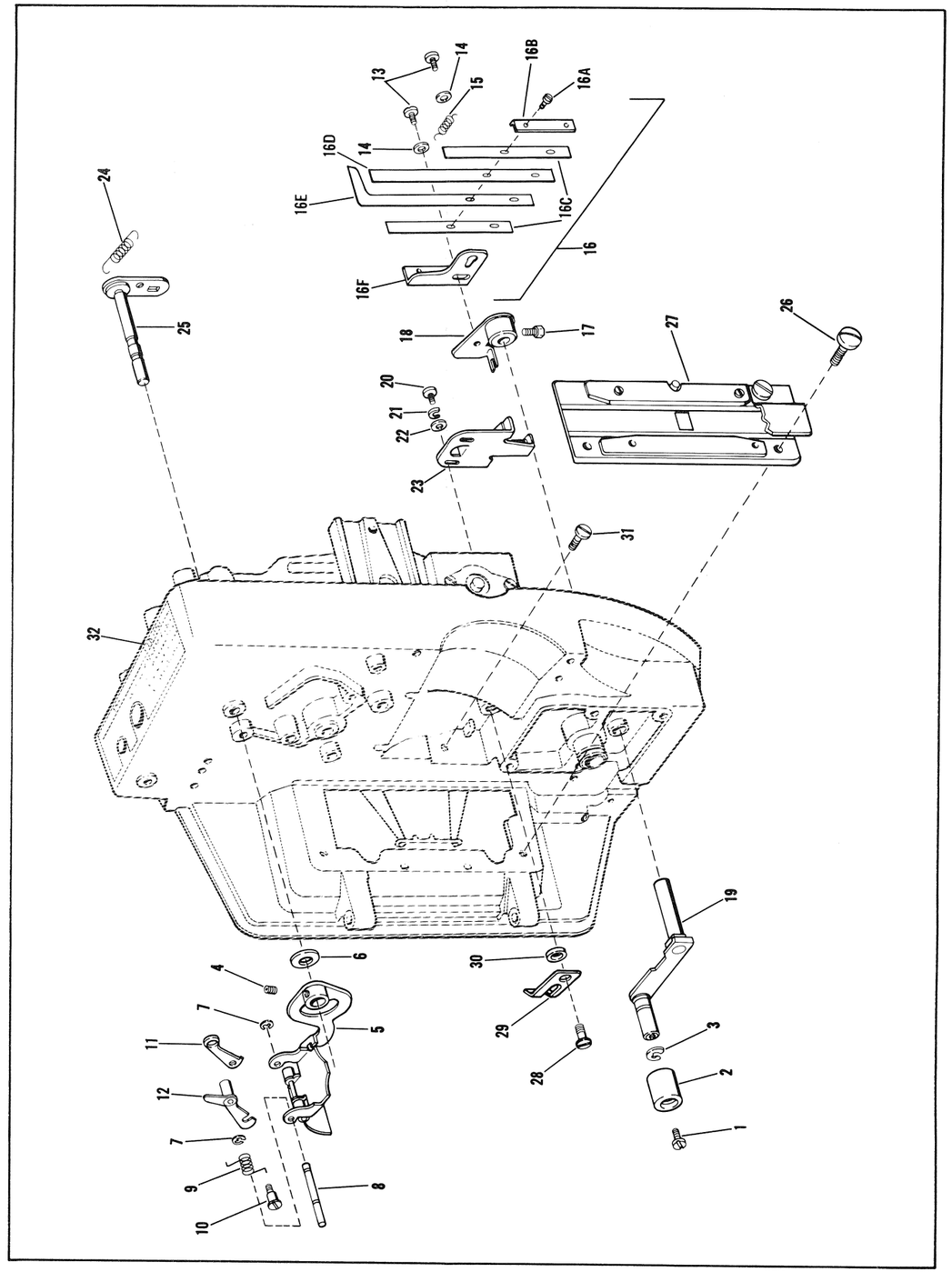

Figure 16. Mechanism Assembly

FIG. & INDEX NO.	PART NO.	1 2 3 4 5 6 7 DESCRIPTION	UNITS PER ASSY	USABLE ON CODE
		MECHANISM ASSEMBLY		
17-1	36770	. SETSCREW	2	
-2	40835	. PULLEY, Mechanism	1	A
-2	40959	. PULLEY, Mechanism	1	B
-3	31943	. SCREW, Baffle assembly attaching	1	
-4	36843	. SCREW, Baffle assembly attaching	2	
-5	013011	. BAFFLE ASSEMBLY	1	
-6	40834	. SPACER, Baffle	2	
-7	31943	. SCREW, Bracket attaching	1	A
-7	36843	. SCREW	1	B
-7A	613379	. WASHER	1	B
-8	013010	. BRACKET, DOUSER ASSEMBLY	1	
-9	31943	. SCREW, Baffle attaching	1	
-10	40953	. BAFFLE, Heat	1	A
-10	013037	. BAFFLE BRACKET ASSEMBLY	1	B
-10A	40962	. DEFLECTOR, Heat Baffle	1	B
-11	21238	. WASHER, Flat	2	A
-12	31005	. NUT, Shutter	1	
-13	31037	. WEIGHT, Counterbalance	1	
-14	59689	. SHUTTER, 2 Bladed	1	
-15	34797	. WASHER, Fiber	1	
-16	12087	. NUT, Stud assembly	2	
-17	011886	. BALL AND STUD ASSEMBLY	2	
-18	36015	. SPRING, Extension	1	
-19	36013	. WIPER, Felt	1	
-20	30614	. WICK, Cam wiper	1	
-21	31557	. SHUTTLE	1	
-22	011235	. ARM AND BEARING ASSEMBLY, Shuttle	1	
-22A	31011	. . BEARING, Shuttle link	1	
-22B	31003	. . FOLLOWER, Pull-down cam	2	
-23	33346	. CAM, Pull-down	1	
-24	36801	. SCREW, Sems, in-out bracket	2	
-25	011236	. BRACKET ASSEMBLY, In-out	1	
-25A	09702	. . FOLLOWER, In-out cam	1	
-25B	~~31100~~ 76121	. SPRING, In-out	1	
-26	31001	. CAM, In-out	1	
-27	36017	. SCREW, Sems	2	
-28	013009	. PLATE ASSEMBLY, Shuttle arm	1	
-29	09712	. SUPPORT BEARING ASSEMBLY	1	
-30	31009	. RING, Retaining	1	
-31	31094	. SCREW, Loading spring	2	
-32	31553	. SPRING, Bearing load	1	
-33	36763	. SETSCREW, Loop restoring cam	1	
-34	31007	. BEARING, Ball	1	
-35	36769	. SETSCREW, Worm gear attaching	2	
-36	36042	. CAM, Loop restoring	1	
-37	09852	. GEAR, Worm	1	
-38	31078	. RING, Retaining	1	
-39	31006	. BEARING, Ball	1	
-40	36065	. CAMSHAFT	1	
-41	30163	. SCREW	1	
-42	35837	. SPRING, In-out	1	
-43	36667	. PIN, Shuttle retractor	1	
-44	36048	. PIN, Framer stop	1	
-45	35875	. STUD, Rewind adjustment	1	
-46	36763	. SETSCREW, Rewind adjustment stud	1	
-47	09732	. KNOB AND SHAFT ASSEMBLY, Framer	1	
-48	013008	. HOUSING & BEARING ASSEMBLY	1	

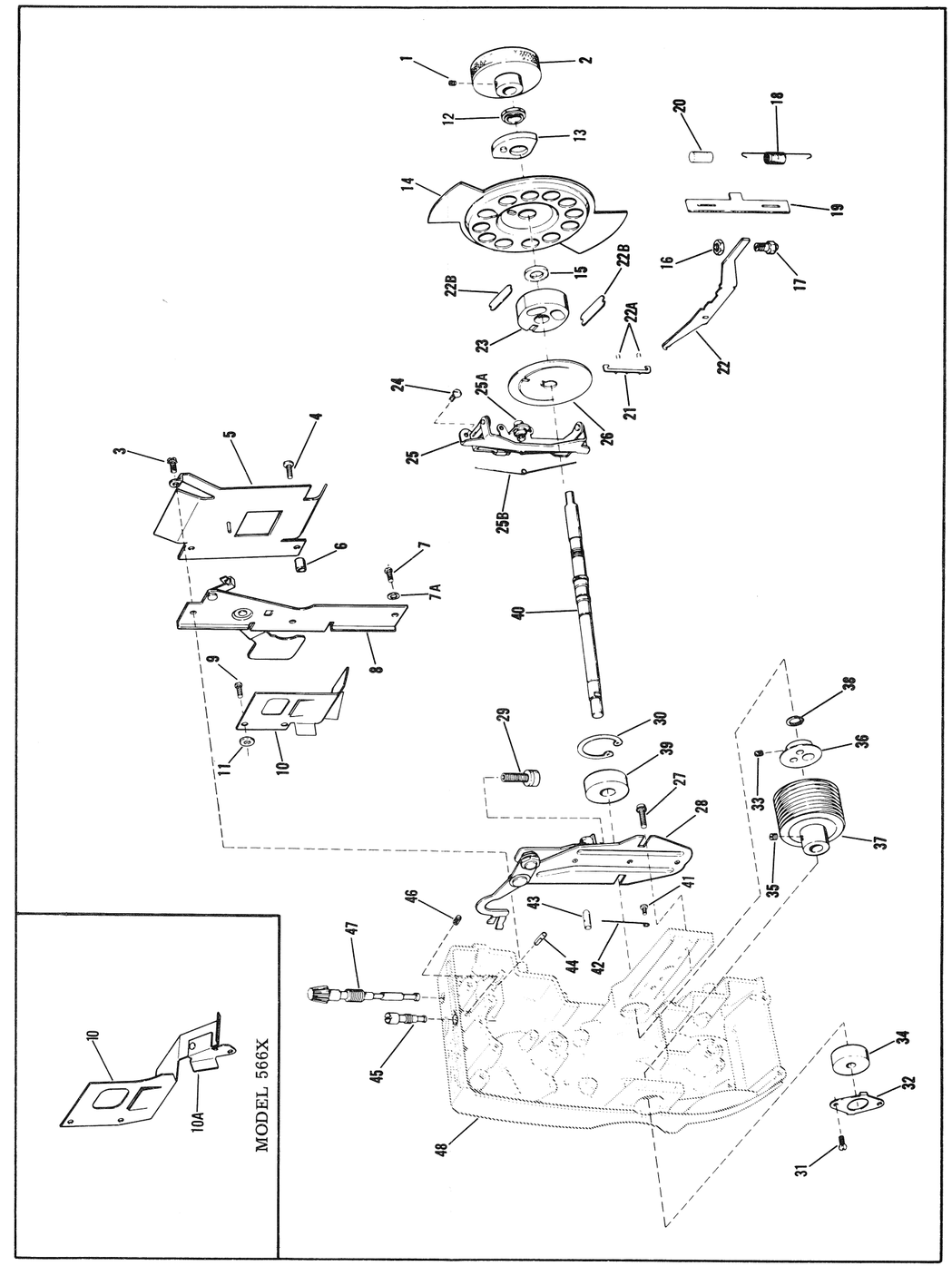

Figure 17. Mechanism Assembly

(FIG. 17)

FIG. & INDEX NO.	PART NO.	DESCRIPTION 1 2 3 4 5 6 7	UNITS PER ASSY	USABLE ON CODE
		SPROCKET GUARD ASSEMBLY		
18-	012333	GUARD ASSEMBLY, Sprocket	REF	
-1	31551	. SCREW	1	
-2	700639	. WASHER	1	
-3	012332	. CHANNEL AND POST ASSEMBLY	1	
-4	30164	. SCREW	1	
-5	37000	. STRIKE, Cover	1	
-6	33356	. GUARD, Sprocket	1	
		LENS CARRIER ASSEMBLY		
19-	09899	LENS CARRIER ASSEMBLY	REF	
-1	31094	. SCREW, Hold-down spring	2	
-2	31093	. SPRING, Hold-down	1	
-3	09847	. KNOB ASSEMBLY, Focus	1	
-4	35880	. SCREW, Pressure plate	2	
-5	35868	. BUSHING, Spacer (upper)	1	
-6	31097	. BUSHING, Spacer (lower)	1	
-7	31092	. PLATE, Pressure	1	
-8	34897	. SPRING, Compression	2	
-9	35819	. LEVER, Pressure plate	1	
-10	31905	. SCREW, Adjustment plate	2	
-11	31095	. PLATE, Adjustment	1	
-12	09898	. CARRIER, Lens	1	
		APERTURE PLATE ASSEMBLY		
20-	No Number	APERTURE PLATE ASSEMBLY	REF	
-1	31978	. SCREW, Guide rail	2	
-2	35883	. RAIL, Film guide	1	
-3	37296	. SCREW, Tension rail	2	
-4	36079	. COVER, Spring retaining	1	
-5	37295	. SPACER	2	
-6	37294	. RAIL, Tension	1	
-7	31135	. SPRING, Side tension	1	
-8	31978	. SCREW	1	
-9	36075	. GUIDE, Film	1	
-10	012132	. PLATE, Aperture	1	

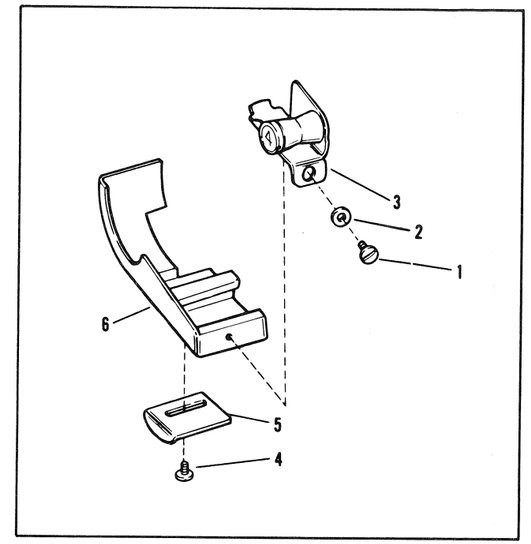

Figure 18. Sprocket Guard Assembly

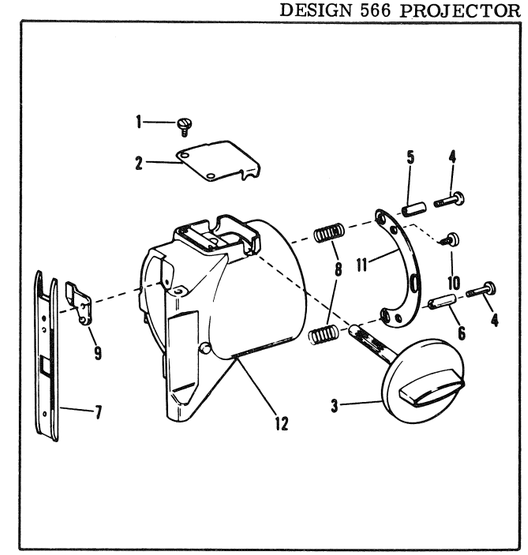

Figure 19. Lens Carrier Assembly

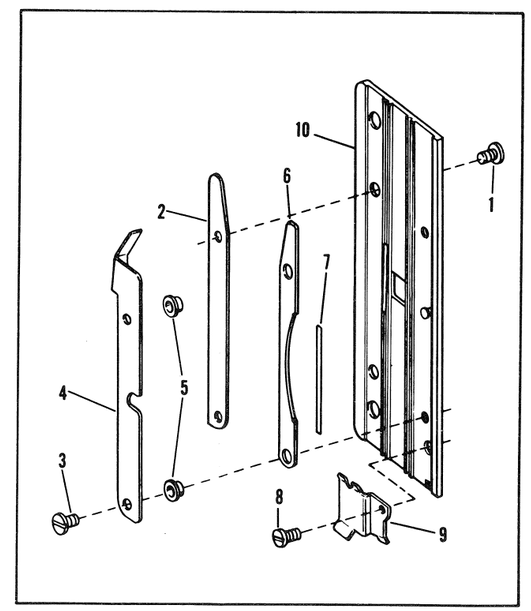

Figure 20. Aperture Plate Assembly

REFERENCE DESIGNATION	PART NO.	DESCRIPTION	USABLE ON CODE
21-	013015	POWER SUPPLY ASSEMBLY, Amplifier	A
21-	012305	POWER SUPPLY ASSEMBLY, Amplifier	B
C10	29630	. CAPACITOR, Ceramic disc 470 pf 500WV	
C24, C25	39544	. CAPACITOR, Electrolytic 30/30 uf 450V	
R35	39537	. RESISTOR, Fixed composition 82 ohm 2W	
D1	39535	. SILICON RECTIFIER	
T1	40842	. TRANSFORMER, Power	
T2	40843	. TRANSFORMER, Output	
J1	31685	. JACK, Auxiliary speaker	
CB1	40258	. CIRCUIT BREAKER	A
CB1	40974	. CIRCUIT BREAKER	B

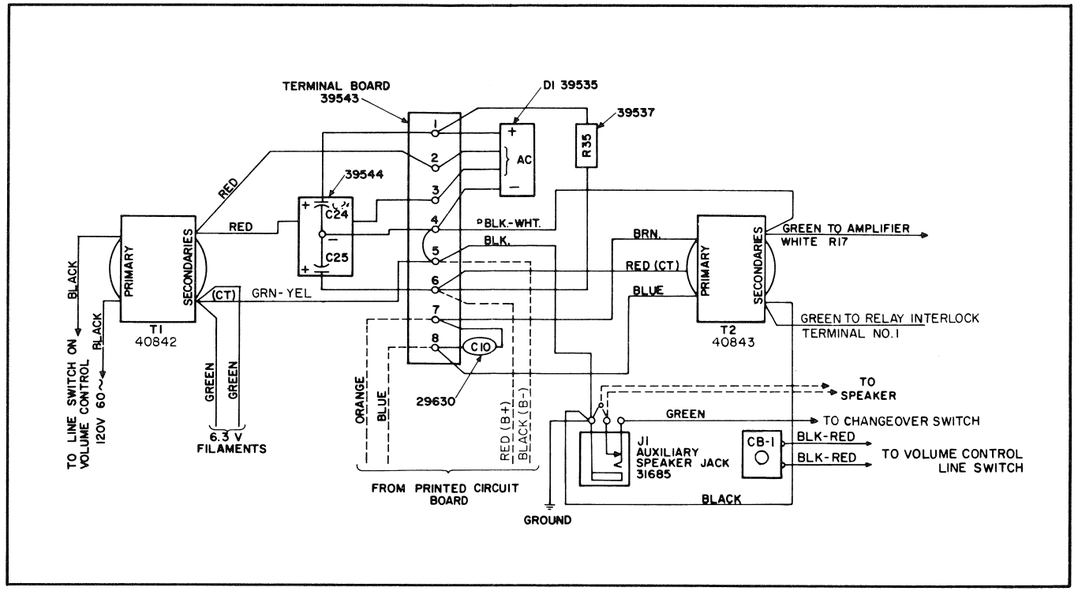

Figure 21. Power Supply Assembly, Amplifier

FIG. & INDEX NO.	PART NO.	1 2 3 4 5 6 7 DESCRIPTION	UNITS PER ASSY	USABLE ON CODE
		POWER SUPPLY ATTACHING PARTS		
22-1	40815	CHASSIS, Mounting	1	
-2	40813	BRACKET, Mounting, condenser and terminal strip	1	
-3	39543	STRIP, Terminal	1	
-4	19025	RIVET	4	
-5	39570	CLIP, Capacitor	2	
-6	19010	NUT, Hex	1	
-7	605220	SCREW	4	
-8	600797	WASHER	4	
-9	9921	NUT	4	
-10	25266	WASHER	2	
-11	19037	NUT	2	

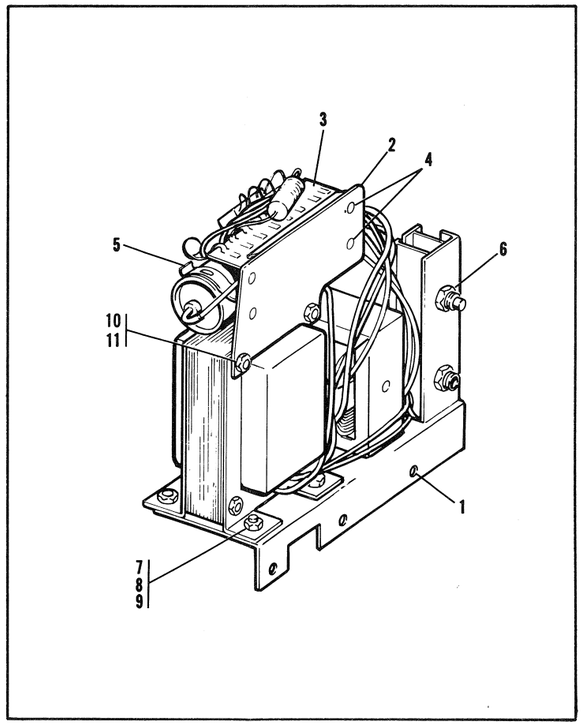

Figure 22. Power Supply Attaching Parts

REFERENCE DESIGNATION	PART NO.	DESCRIPTION	USABLE ON CODE
23-	013033	VOLUME CONTROL ASSEMBLY, Complete	
	31722	. VOLUME CONTROL Only	
	70343	. VARIABLE RESISTOR AND LINE SWITCH (DPDT)	
C16	39546	. CAPACITOR, Ceramic disc 8200 pf 1000WV	
C20	27789	. CAPACITOR, Ceramic disc 2000 pf 500WV	
C21	25824	. CAPACITOR, Ceramic disc 20,000 pf 500WV	
C22	25825	. CAPACITOR, Ceramic disc 100 pf 500WV	
C23	39556	. CAPACITOR, Ceramic disc 20,000 pf 1000WV 20%	
R31, R32	34840	. RESISTOR, Fixed composition 220K 1/2W	
R33	31732	. RESISTOR, Fixed composition 1500 ohm 1/2W	
R36	19307	. RESISTOR, Fixed composition 5.6K 1/2W	
24-	012580	AMPLIFIER ASSEMBLY (Less tubes and volume control)	
XV1	39576	SOCKET, Tube V1	
V1	38369	TUBE (7025) P/U Shield 37954	
XV2, XV3	39550	SOCKET, Tube V2, V3	
V2, V3	39534	TUBE (ECL86/6GW8)	
XV4	31758	SOCKET, Tube V4	
V4	22578	TUBE (6AQ5)	
L1	39533	OSCILLATOR COIL	
Q1	38336	TRANSISTOR (2N2613) Small signal audio amplifier	
C2	39538	CAPACITOR, Electrolytic 50 uf 3V	
C3, C17	31727	CAPACITOR, Ceramic disc 10,000 pf ± 20% 500WV	
C4, C12	37324	CAPACITOR, Electrolytic 35 uf 25V	
C5	39540	CAPACITOR, Electrolytic 20 uf 250V	
C6, C9, C13, C14, C19	37325	CAPACITOR, Ceramic disc 20,000 pf GMV, 500WV	
C7	39539	CAPACITOR, Electrolytic 10 uf 15V	
C8	31735	CAPACITOR, Ceramic disc 100 pf 1000WV	
C11, C15	39541	CAPACITOR, Electrolytic 60/60 uf 350V	
C18	39545	CAPACITOR, Silvered mica 510 pf	
C26	27799	CAPACITOR, Ceramic disc 270 pf 500WV	
R1	36008	RESISTOR, Carbon 56K ± 5% 1/2W	
R2, R6, R9	31749	RESISTOR, Carbon 3.9K 1/2W	
R3	31742	RESISTOR, Carbon 10K 1/2W	
R4	36007	RESISTOR, Carbon 180 ohm 1/2W	
R5	36009	RESISTOR, Carbon 1200 ohm 1/2W	
R7	31745	RESISTOR, Carbon 47K 1/2W	
R8, R13, R26	31740	RESISTOR, Carbon 470K 1/2W	
R10, R11, R16	31739	RESISTOR, Carbon 100K 1/2W	
R12, R15, R18, R23	31747	RESISTOR, Carbon 1800 ohm 1/2W	
R14	39542	RESISTOR, Carbon 18K 1W	
R17	31744	RESISTOR, Carbon 22K 1/2W	
R20	39549	RESISTOR, Wirewound 130 ohm 2W	
R21, R22	38229	RESISTOR, Carbon 240K 1/2W	
R24	31729	RESISTOR, Carbon 820 ohm 1W	
R25	31741	RESISTOR, Carbon 3.3K 1/2W	
R27, R30	31725	RESISTOR, Carbon 150K 1/2W	
R28	39536	RESISTOR, Wirewound 4.5K 5W	
R29	39548	RESISTOR, Carbon 5.6K ± 5% 1W	

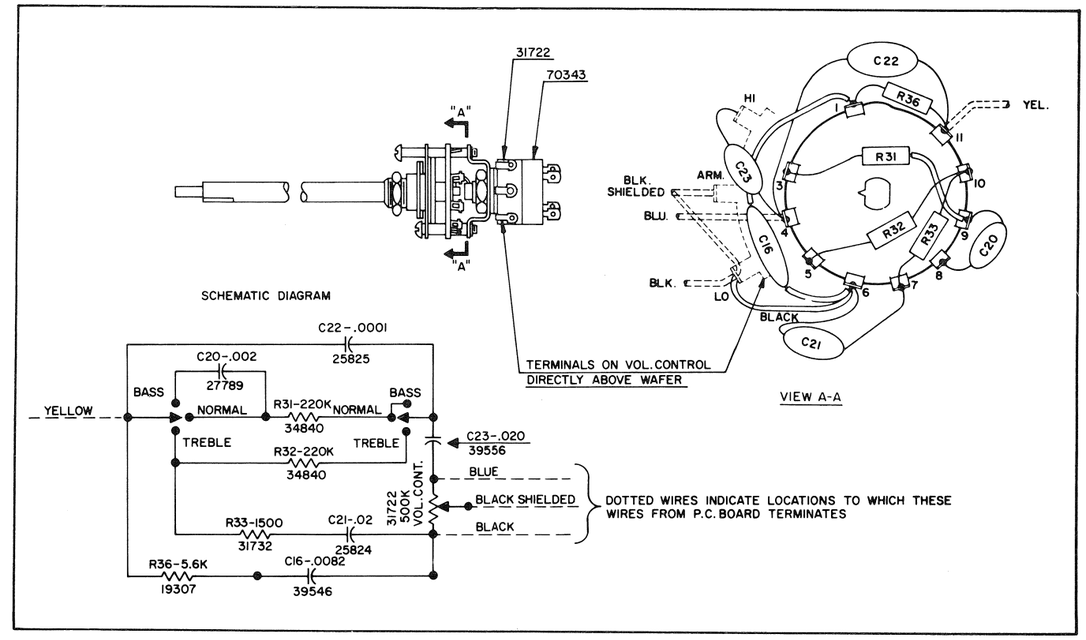

Figure 23. Volume Control Schematic

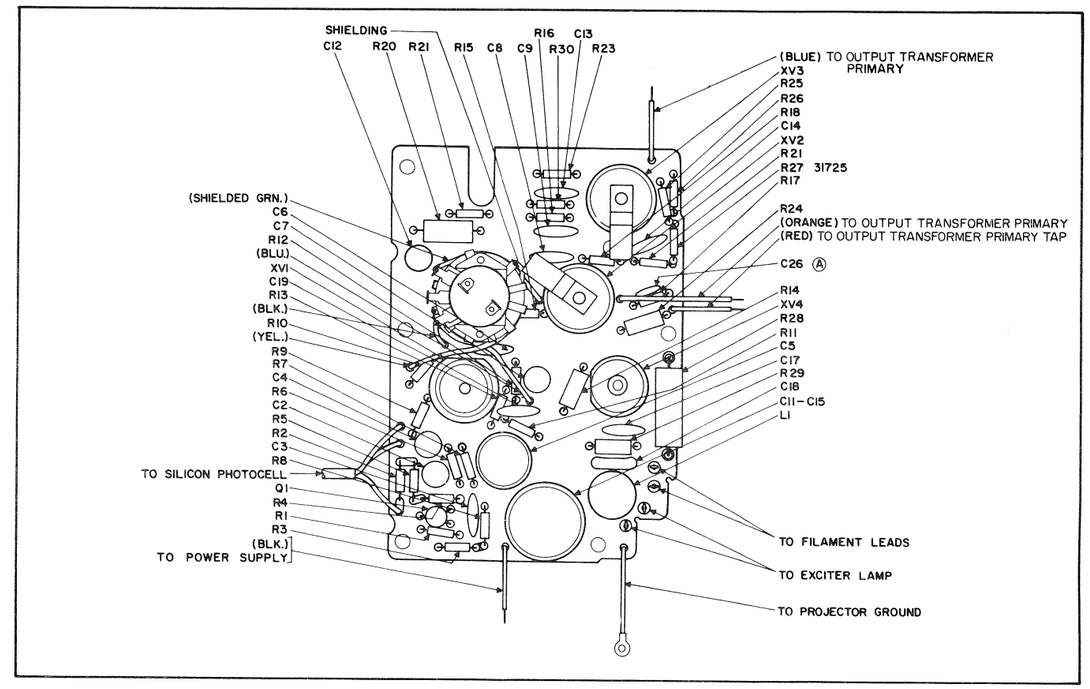

Figure 24. Amplifier Assembly

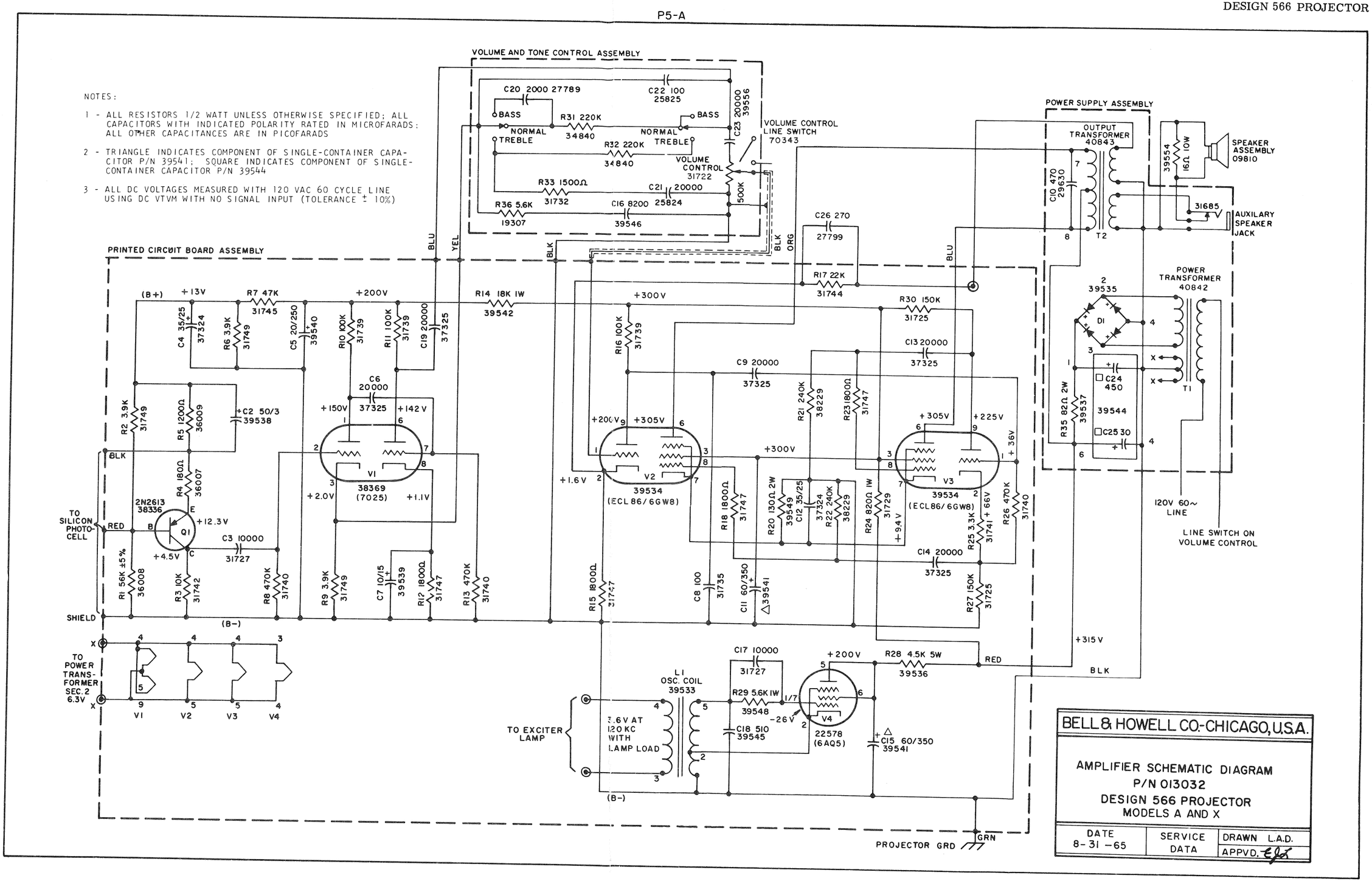

Figure 25. Amplifier Schematic Diagram

(FIG. 25)

P5-C (SHEET 3)

NOTE:

Amplifier Power Supply Circuit Breaker 40258 is used on 566A Models.

Amplifier Power Supply Circuit Breaker 40974 is used on 566X Models.

Motor Capacitor 31266 130-156 MFD. is used on 566A Models.

Motor Capacitor 41302 53-64 MFD. is used on 566X Models.

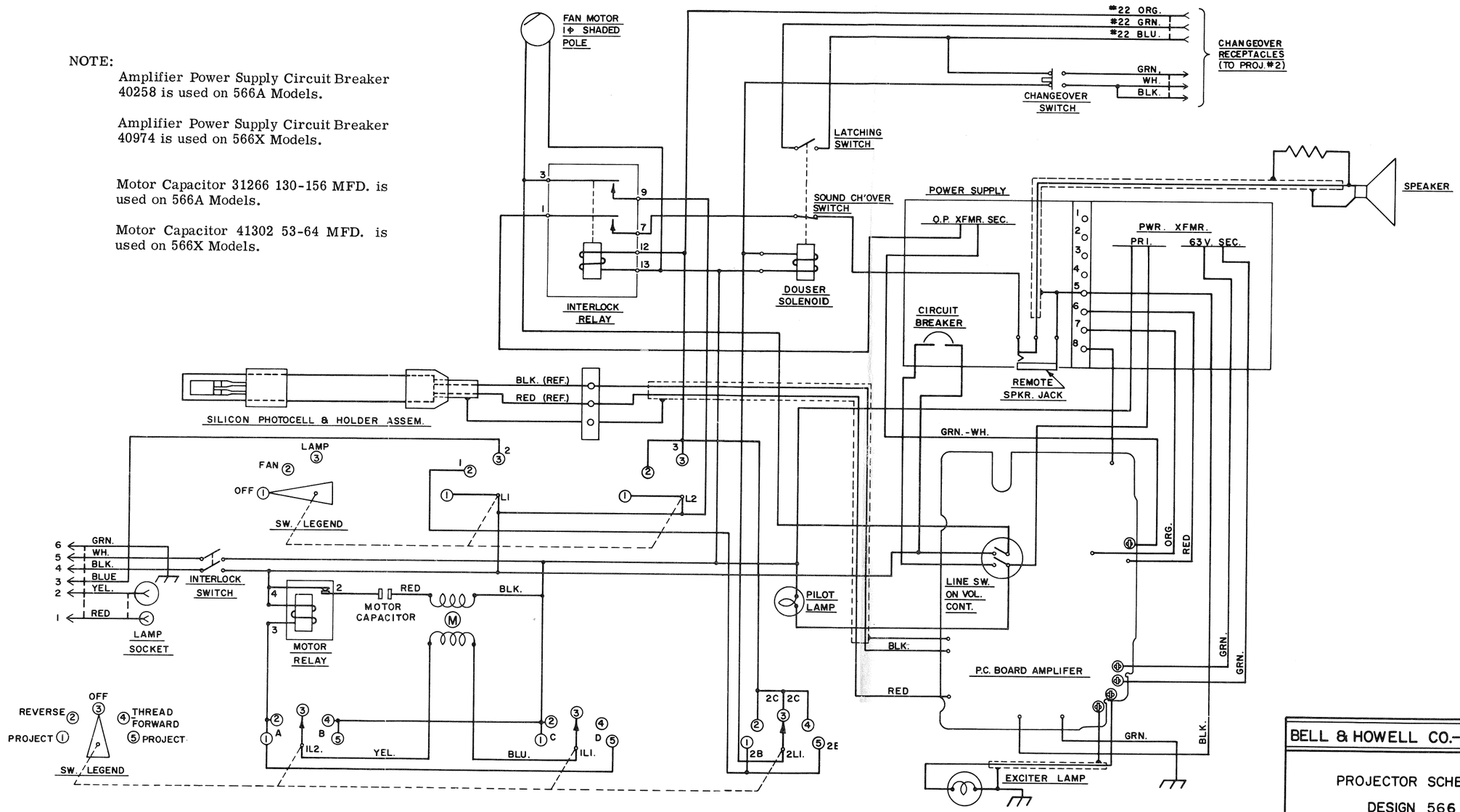

Figure 26. 566A and 566X Projector Schematic

(FIG. 26)

P5-C (SHEET-1)

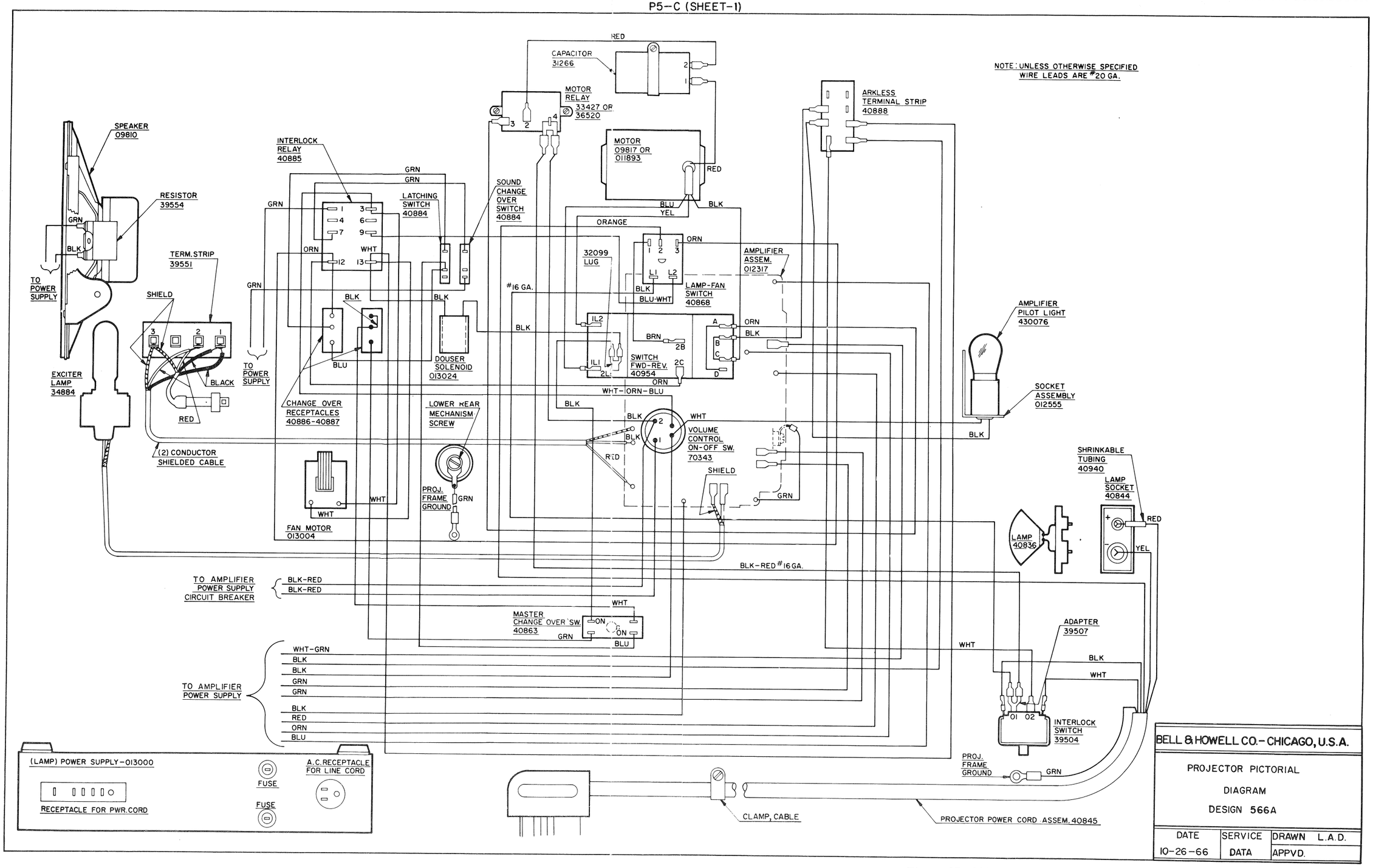

Figure 27. 566A Projector Pictorial Diagram

(FIG. 27)

P5-C (SHEET 2)

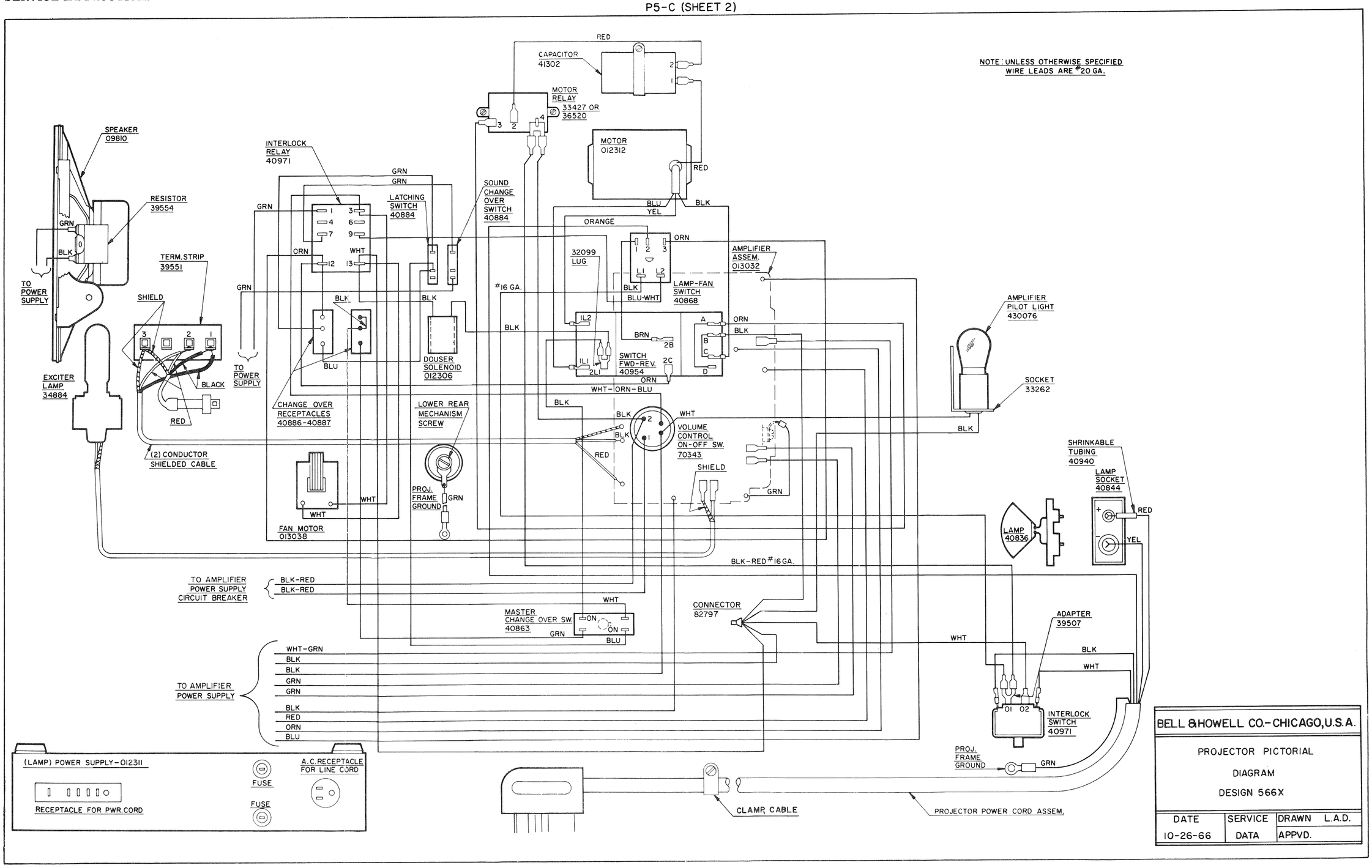

(FIG. 27A)

Figure 27A. 566X Projector Pictorial Diagram

FIG. & INDEX NO.	PART NO.	DESCRIPTION 1 2 3 4 5 6 7	UNITS PER ASSY	USABLE ON CODE
		ORCHESTRICON II SPEAKER ASSEMBLY		
28-	012568	SPEAKER ASSEMBLY, Orchestricon II	1	
-1	36293	. RIVET, Tubular	4	
-2	36291	. LATCH, Speaker door	1	
-3	39190	. RIVET, Tubular	2	
-4	400541	. BUMPER, Recessed	2	
-5	700846	. RIVET, Tubular	10	
-6	39759	. HINGE, Speaker door	2	
-7	12087	. NUT, Hex	2	
-8	30404	. WASHER	2	
-9	39760	. HANDLE, Carrying, complete	1	
-10	012567	. CABLE AND CONNECTOR ASSEMBLY	1	
-11	33464	. SCREW, Wood, flat head	9	
-12	012570	. REEL ASSEMBLY, Cable storage	1	
-13	012569	. STUD ASSEMBLY, Reel storage	1	
-14	37897	. WASHER	1	
-15	25617	. NUT, Special	1	
-16	28059	. RECEPTACLE, Jack plug	2	
-17	25368	. WASHER	2	
-18	012574	. BAFFLE ASSEMBLY, Speaker	1	
-19	39762	. GRILLE, Deflector (secure with staples 29062)	1	
-20	19037	. NUT, Hex	4	
-21	23382	. WASHER	4	
-22	40269	. SCREW, Special	4	
-23	39761	. SPEAKER	1	
-24	39765	. GRILLE, Speaker	1	
-25	40268	. TRIM, Decorative (cement in place)	1	
-26	18086	. FOOT, Rubber	4	
-27	25617	. WASHER, Flat	4	
-28	012571	. CASE AND DOOR ASSEMBLY, Speaker	1	
-29	40272	. PAD (secured with grille p/n 39762)	1	
	39774	. NAMEPLATE, Bell & Howell	1	
	39775	. NAMEPLATE, Operating notice	1	

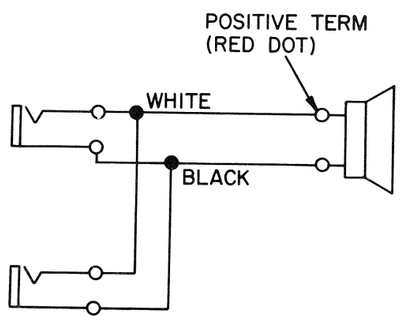

SPEAKER SCHEMATIC DIAGRAM

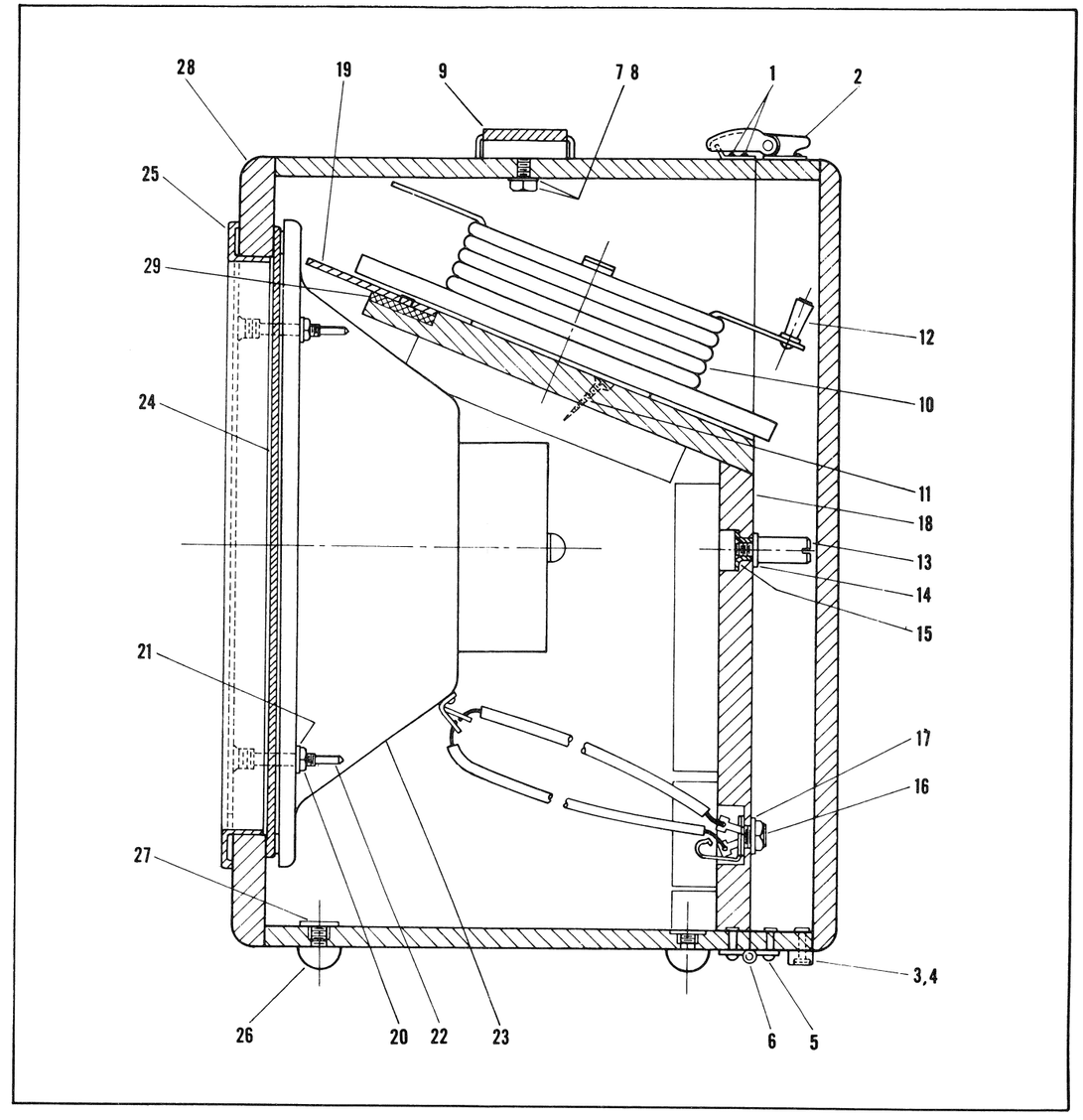

Figure 28. External Speaker

NUMERICAL INDEX OF PARTS

PART NO.	FIG. & INDEX NO.	PART NO.	FIG. & INDEX NO.	PART NO.	FIG. & INDEX NO.	PART NO.	FIG. & INDEX NO.
011160	12-	013009	17-28	09910	3-12	31006	17-39
011175	2-17	013010	17-8	09946	2-14	31007	17-34
011203	11-22	013011	17-5	12087	17-16, 28-7	31009	17-30
011212	15-36	013012	1-5	13918	16-30	31011	17-22A
011213	15-25	013015	5-38, 21-	14175	6-11, 8-15, 9-2,	31015	14-34
011214	16-25	013018	2-		10-7	31017	7-8, 14-38
011218	15-41	013019	2-	14350	4-9	31019	14-3
011219	16-19	013020	4-11	15563	3-45	31020	14-4, 16-22
011220	15-12	013021	6-19	17639	9-30, 14-12,	31023	14-18
011221	15-26	013022	4-17		15-28, 15-33	31037	17-13
011222	7-23	013023	4-14	17676	15-13	31039	8-26F, 8-26J,
011226	14-36	013024	6-12	18086	1-2, 3-40,		14-21
011228	14-35	013032	8-13		28-26	31040	14-22
011233	15-34	013033	23-	19010	22-6	31041	14-15
011235	17-22	013034	8-18	19025	4-17A, 22-4	31042	14-17
011236	17-25	013037	17-10	19037	8-38, 22-11,	31044	14-16
011244	11-24	013038	8-17, 13-		23-R36, 28-20	31049	5-13, 5-15,
011245	15-4	013040	13-5	20808	11-2, 14-6,		7-1C, 14-8,
011248	16-23	020240	11-13		16-3		15-6, 15-10,
011249	16-16	03980	3-29, 10-	21238	5-17, 16-14,		16-26
011250	16-18	09702	17-25A		17-11	31078	17-38
011886	17-17	09712	17-29	21736	3-21, 8-26E	31092	19-7
011889	10-15	09721	14-14	22578	24-V4	31093	19-2
011893	5-30	09724	14-20	23382	28-21	31094	17-31, 19-1
011942	11-1	09730	14-23	24042	9-35A, 9-39A,	31095	19-11
011946	4-5	09732	17-47		10-5A, 10-29A	31097	19-6
011948	9-16, 10-25	09752	9-35, 10-29	24043	10-4	31100	17-25B
012121	14-25	09753	10-3	24047	3-15	31120	14-14
012126	14-33	09755	10-5	24270	9-1, 10-6	31121	14-14
012132	20-10	09768	5-18	24271	11-12	31135	20-7
012133	16-5	09769	5-21	24452	14-26	31231	5-26
012134	16-12	09774	9-13	24903	9-18	31234	10-21
012135	14-7	09775	9-39	25266	22-10	31235	10-16
012305	5-38, 21-	09776	9-9	25368	28-17	31236	9-29, 10-23
012306	6-12	09777	9-33	25617	28-15, 28-27	31237	3-19
012311	1-1	09778	9-32	25824	23-C21	31238	10-22
012312	5-30	09789	15-32	25825	23-C22	31239	9-25, 10-11,
012314	4-17	09803	8-26	26906	13-8		10-12
012332	18-3	09804	3-35	27789	23-C20	31241	9-24, 10-10
012333	14-27, 18-	09806	12-8	27799	24-C26	31242	10-17
012363	11-39	09808	3-33	28059	28-16	31243	7-3, 7-10, 9-27,
012552	7-12, 11-	09810	5-4	28718	13-2		10-13
012555	4-17B	09817	5-30			31245	9-23, 10-9
012558	11-18	09826	11-26	29630	21-C10	31246	10-18
012567	28-10	09828	11-17	30163	11-6, 11-27,	31247	10-2
012568	28-	09832	11-36		17-41	31249	10-31
012569	28-13	09834	11-29	30164	4-1, 4-24, 7-14,	31251	10-8
012570	28-12	09835	11-30		11-32, 11-34,	31263	5-36
012571	28-28	09838	11-38		14-28, 15-1,	31265	5-28
012574	28-18	09847	19-3		16-1, 16-10,	31266	5-9
012580	24-	09849	3-28, 9-		18-4	31342	3-14
012654	3-22	09852	17-37	30171	9-36	31356	9-20
012656	3-20	09887	4-7	302097	3-46	31358	3-26
012658	3-18	09888	5-27	303541	15-29	31359	9-14
013000	1-1	09896	4-6	30404	28-8	31360	9-28
013004	8-16, 13-	09898	19-12	30614	17-20	31361	9-3
013005	13-5	09899	14-5, 19-	31001	17-26	31363	9-6
013006	13-3	09901	7-1	31003	17-22B	31364	9-8
013008	17-48	09902	8-20	31005	17-12	31365	9-7

NUMERICAL INDEX OF PARTS (CONT)

PART NO.	FIG. & INDEX NO.
31366	9-5
31367	9-31
31368	9-38
31369	9-17
31370	3-30, 9-34
31371	9-10
31372	3-23, 9-21
31375	9-39B
31413	15-21
31451	15-39
31474	16-16B
31476	7-5
31491	3-42, 7-9, 7-11, 8-34
31493	5-1, 8-39
31499	5-2, 5-16
31503	5-8
31536	11-4, 14-10
31550	7-1A, 7-13, 15-16
31551	4-8, 15-19, 15-24, 15-35, 16-20, 18-1
31553	17-32
31555	15-37, 16-16A
31557	17-21
31559	8-26B
31561	8-24
31563	8-26K
31564	8-26H
31565	8-26D
31567	8-26A
31568	8-26C
31569	11-35
31609	7-1B
31610	7-1D
31630	11-15
31636	11-19
31638	11-16
31643	11-8
31668	11-39B
31669	11-23
31671	11-14
31673	11-31
31674	11-28
31675	11-33
31685	21-J1
31722	23-
31725	24-R27, 24-R30
31727	24-C3, 24-C17
31729	24-R24
31732	23-R33
31735	24-C8
31739	24-R10, 24-R11, 24-R16
31740	24-R8, 24-R13, 24-R26
31741	24-R25
31742	24-R3
31744	24-R17
31745	24-R7
31747	24-R12, 24-R15, 24-R18, 24-R23
31749	24-R2, 24-R6, 24-R9
31758	24-XV4
31766	11-40
31905	19-10
31906	14-14
31914	5-14
31923	8-3
31928	5-6, 8-29
31929	8-35
31930	4-16, 4-29
31943	3-31, 3-32, 4-13, 17-3, 17-7, 17-9
31954	16-32
31957	14-2
31958	14-1
31977	16-21
31978	20-1, 20-8
32943	6-15
33260	16-31
33262	4-17B
33299	3-10
33300	3-9
33301	3-11
33302	3-13
33306	12-6
33346	17-23
33347	15-31, 16-17
33356	18-6
33359	7-1E
33361	12-4
33368	3-4
33370	3-5
33371	3-3
33372	2-12
33373	2-11
33374	2-15
33383	2-8
33385	9-26
33390	2-7, 5-3
33391	3-2
33427	5-12
33428	5-30A
33464	28-11
33488	12-9
33491	3-31
33495	8-32
33785	6-14
33966	10-19
34765	3-27
34766	8-23
34784	8-8
34787	11-5
34797	17-15
34798	2-10
34822	8-26G
34833	8-11
34834	8-12
34837	11-3
34840	23-R31, 23-R32
34854	9-37
34860	9-11
34861	9-22
34874	9-4
34878	7-1F, 14-28A, 16-6
34879	14-28A
34884	11-10
34885	16-29
34889	8-21
34892	11-11
34897	19-8
34899	5-10
34900	5-29
35811	3-25
35814	14-29
35819	19-9
35820	15-40
35822	15-20
35823	11-7
35830	14-31
35834	15-22
35837	17-42
35838	15-15
35840	16-2
35846	15-27
35849	15-7
35850	15-23
35852	7-16
35856	7-26
35858	7-25
35859	7-24
35860	7-27
35861	7-15
35862	7-17
35863	15-11
35866	15-18
35867	15-17
35868	19-5
35869	16-24
35874	15-14
35875	17-45
35880	19-4
35883	20-2
35885	15-9
35886	7-29
35910	14-37
36007	24-R4
36008	24-R1
36009	24-R5
36013	17-19
36015	17-18
36016	14-11
36017	17-27
36018	15-30
36023	15-5
36026	12-7
36027	16-16C
36028	16-16F
36030	3-36
36031	15-4A
36032	14-27A
36033	7-20
36035	7-19
36037	10-30
36038	10-1
36042	17-36
36044	16-15
36047	16-16E
36048	17-44
36051	2-6, 2-13
36052	3-6, 8-31
36053	3-7, 8-25
36059	3-34
36060	3-8
36061	15-8
36062	14-7A
36065	17-40
36068	5-30A
36069	7-1G
36070	7-1H
36075	20-9
36079	20-4
36080	9-19
36081	14-30
36082	15-2
36083	5-19, 5-22, 10-14, 14-19
36084	9-12
36085	10-26
36086	10-27
36094	11-9, 12-10
36099	16-16D
36100	12-5
36291	28-2
36293	28-1
36520	5-12
36532	3-17
36667	17-43
36668	11-21
36763	4-4, 5-33, 10-20, 16-4, 17-33, 17-46
36765	11-20
36769	3-16, 3-24, 8-19, 9-15, 10-24, 14-24, 17-35
36770	17-1
36771	14-32
36797	8-7
36801	6-2, 8-6, 8-14, 16-13, 16-28, 17-24
36802	5-36C, 6-1
36806	13-7
36836	12-2
36841	4-18, 4-22, 6-4
36843	17-4, 17-7
36909	6-6
36986	2-4
36987	2-5
36988	2-2
36989	2-1
36999	14-29A
37000	18-5
37294	20-6
37295	20-5
37296	20-3
37302	16-11
37303	16-8
37304	16-9
37305	14-9
37324	24-C4, 24-C12
37325	24-C6, 24-C9, 24-C13, 24-C14, 24-C19
37897	28-14
38167	14-13
38207	5-25
38229	24-R21, 24-R22
38336	24-Q1
38369	24-V1
39177	13-6
39190	28-3
39352	3-43
39504	8-28
39506	8-27
39517	8-30
39523	7-18, 7-21
39525	5-36
39533	24-L1
39534	24-V2, 24-V3
39535	21-D1
39536	24-R28
39537	21-R35
39538	24-C2
39539	24-C7
39540	24-C5
39541	24-C11, 24-C15
39542	24-R14
39543	22-3
39544	21-C24, 21-C25
39545	24-C18
39546	23-C16
39548	24-R29
39549	24-R20
39550	24-XV2, 24-XV3
39551	11-25
39554	5-5
39556	23-C23
39570	22-5
39575	5-31
39576	24-XV1
39578	2-22
39579	2-24
39580	2-16
39752	5-24
39757	8-33
39759	28-6
39760	28-9
39761	28-23
39762	28-19
39765	28-24
39774	28-29
39775	28-29
39787	7-30
39789	11-37
399023	5-35
399026	7-2
400422	2-3
400476	3-1
400541	28-4
40258	21-CB1
40268	28-25
40272	28-29
40289	28-22
40295	10-28
40756	2-20
40801	4-30
40802	4-27
40813	22-2
40814	5-41
40815	22-1
40821	13-9
40823	13-4
40824	13-1
40834	17-6
40835	17-2
40836	4-28
40837	1-4
40842	21-T1
40843	21-T2
40844	4-34
40845	3-48
40846	2-9
40848	2-21
40849	2-23
40850	2-19
40851	2-18
40861	12-1
40862	4-21
40863	4-20
40864	4-3, 12-11
40865	4-10
40867	12-3
40868	4-12
40869	3-37
40870	4-19
40871	4-25
40873	4-32
40876	5-36B
40878	6-18
40879	6-9
40880	6-13
40881	8-10
40882	7-6
40883	7-7
40884	6-17
40885	6-5
40886	6-8
40887	6-7
40888	5-36D
40889	8-9
40890	6-3
40891	4-41
40892	3-47
40893	8-40
40942	4-26
40944	8-37
40948	5-32
40950	4-23
40953	17-10
40954	8-4
40957	4-33
40958	4-17C
40959	17-2
40962	17-10A
40965	3-38
40966	13-4
40969	2-25
40970	2-26
40971	6-5
40973	13-3
40974	21-CB1
41110	8-5
41122	1-4
41124	1-3
41301	5-30A
41302	5-9
41303	5-36F
430076	4-15
59689	17-14
600735	5-40
600797	8-2, 22-8
600803	8-1
601190	5-7, 5-11
602339	11-39C
605220	22-7
611107	5-20, 5-23
613379	17-7A
613394	11-39A
700008	5-39
700136	5-37
700639	18-2
700846	28-5
70343	23-
705972	7-28
706964	6-10
707026	3-39, 3-44
7994	14-14
8179	8-22
82797	5-36E
83663	15-38
900349	6-16
97509	7-22, 15-3
9921	22-9
99828	16-7

SUPPLEMENT NO. 1

FILMOSOUND PROJECTOR

DES. 566T and 566EXT

NOTE: THIS SUPPLEMENT IS TO BE USED TOGETHER WITH BASIC SERVICE MANUAL PART NUMBER 70472, DATED DECEMBER 1969, TO SERVICE THE DESIGNS 566T AND 566EXT FILMOSOUND PROJECTORS.

PHOTO PRODUCTS GROUP

BELL & HOWELL

GENERAL SERVICE DEPT.
7100 McCORMICK ROAD
CHICAGO, ILLINOIS 60645

PRINTED IN U.S.A.

DECEMBER, 1970

Service Instructions

1. GENERAL.

Except for the integrated circuit amplifier and power supply system and its accompanying circuitry, the Model 566T and 566EXT projectors are physically and functionally the same as the Model 566A and 566X projectors covered in Service Manual P/N 70472. The 566T projector has an operating voltage of 105 to 129 VAC, 60 cycles; the 566EXT has an operating voltage of 105 to 129 VAC, 50 cycles.

Because the integrated circuit models are so similar in design to the 566A and 566X projectors, the service instructions in the basic service manual for the 566A and 566X will apply to the 566T and 566EXT except as noted in the following paragraphs. When ordering replacement parts for integrated circuit models, be sure to check the parts application data following these service instructions.

When making electrical repairs to the projector of integrated circuit models, refer to Figure E at the end of this supplement for proper wiring connections.

2. AMPLIFIER AND POWER SUPPLY. The amplifier test points shown in Figure W of the basic manual apply only to the Models 560A, 566A and 566X projectors. Refer to Figures A through D in this supplement for amplifier/power supply installation parts, replacement parts and schematic wiring. Use standard electronic shop techniques to check for continuity and for shorts and grounds. Refer to the schematic diagram, Figure D, for voltages and ratings of components. Defective solder-secured parts can be removed by cutting the leads as close as possible to the body of the part or by unsoldering leads at the terminals. When unsoldering, use a heat sink and a pencil-type solder gun, and avoid the direct application of heat to adjacent components.

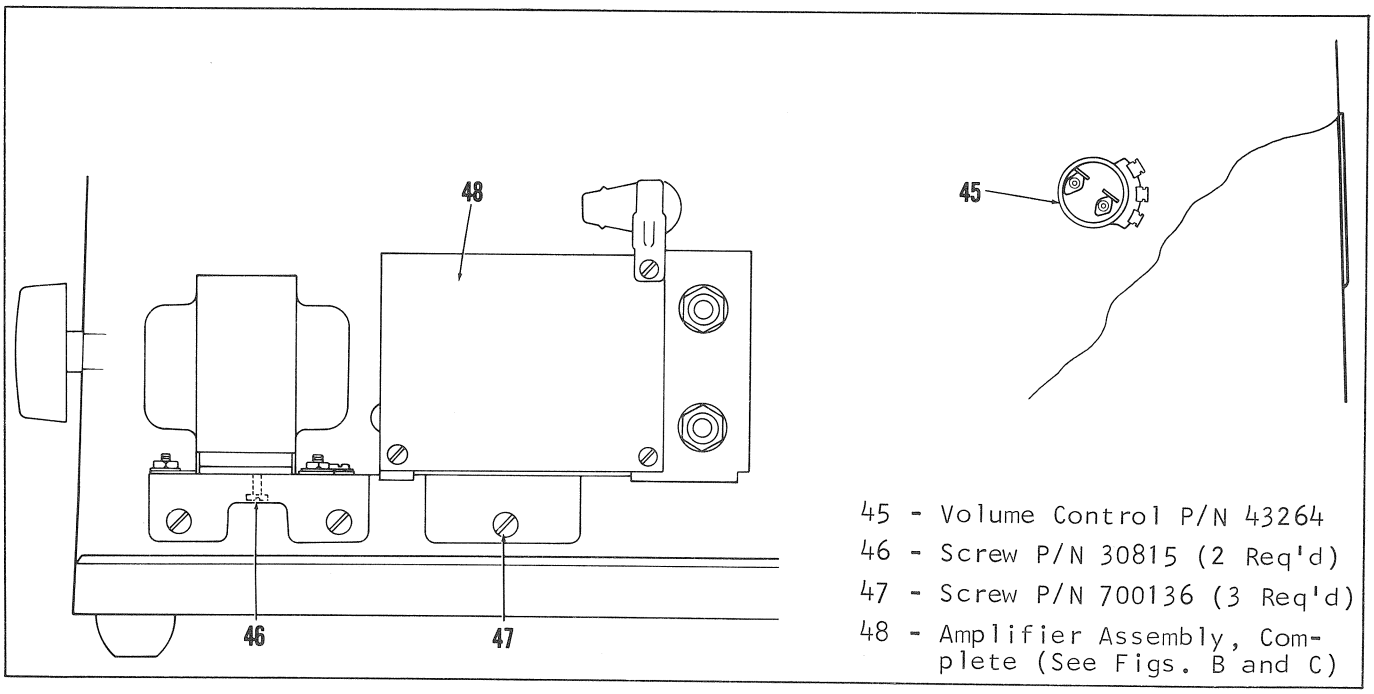

Figure A. Integrated Circuit Amplifier Assembly Installed

Parts List Corrections

GENERAL.

Basic service manual No. 70472 covers the Design 566A 60-cycle Autothread projector (coded A), the Design 566X 50-cycle Autothread projector (coded B), and the Design 560A 60-cycle Manual thread projector (coded C). It is suggested that you mark the basic parts list to indicate the application of parts to the Design 566T and 566EXT integrated circuit models, using code letter D for the 566T and E for the 566EXT.

The Design 566T and 566EXT projectors are equipped with the integrated circuit amplification system. Therefore, Parts Catalog Figures 21 through 27 will not apply to these two models. Replacement parts and wiring diagrams for integrated circuit models are included in this supplement. Except as otherwise noted below, all listed parts will apply to integrated circuit projectors.

FIGURE 1 PARTS LIST. Note that lamp supply unit P/N 013310 is used with 566T (code D) projectors, while lamp supply unit P/N 013300 and connector P/N 41122 (item -5) are used with 566EXT projectors.

FIGURE 2 PARTS LIST. Note the following application of parts to 566T and 566EXT projectors.

a. Front cover assembly P/N is used on 566T and 566EXT projectors. Front cover parts designated for "early models" do not apply to these two projectors.

b. Note that rear cover assembly P/N 013376 is used on 566T and 566EXT projectors. Rear cover parts are the same as those listed (items -14 through -26) except that gasket P/N 33494 is used along the leading edge of the front grille (item -17) and the tube replacement label P/N 40956 (item -20) is not used in 566T/566EXT projectors.

FIGURE 3 PARTS LIST. Note the following application of parts to 566T and 566EXT projectors.

a. Item -3: Handle cap P/N 33371 is used on 566EXT projectors; handle cap P/N 43360 is used on 566T projectors.

b. Item -7: For all models, change part number from 30859 to 30857 and length from 5/8 inch to 7/16 inch.

c. Items -18 and -20: 566T and 566EXT projectors use current rewind sprocket assembly P/N 012661 and take-up sprocket assembly P/N 012662.

d. Items -32 through -36: 566T and 566EXT projectors are equipped with these film cutter parts.

e. Item -38: Note that projector nameplate P/N 41167 is used on 566T projectors; nameplate P/N 41168 is used on 566EXT projectors.

f. Item -48: Note that power cord assembly P/N 43265 is used on 566T and 566EXT projectors.

FIGURE 4 PARTS LIST: Note the following application of parts to 566T and 566EXT projectors.

a. Item -14: 566T and 566EXT projectors use switch nameplate P/N 013379.

b. Item -15: 566T and 566EXT projectors use pilot lamp P/N 41142.

c. Item -16: All current projectors use 8-32 by 5/8 inch hex head swage type screws P/N 30816. Refer to the Parts Catalog introduction for data on swage type screws.

d. Item -17: 566T and 566EXT projectors use lamp bracket assembly P/N 013382, with lamp socket P/N 41140 (item -17B).

e. Item -35: Threading guide decal P/N 35909 is used only on the manual threading models.

FIGURE 5 PARTS LIST: Note the following application of parts to 566T and 566EXT projectors:

a. Item -2: 566T and 566EXT projectors use screws P/N 706193.

b. Item -5: Change the description of this part to read "RESISTOR, Wire wound," and note that this item is used only on code ABC projectors.

c. Item -9: 566T projectors use capacitor P/N 31266; 566EXT projectors use capacitor P/N 41302.

d. Item -10: Screws P/N 43474, less nuts (item -11) are used to attach motor relay (item -12).

e. Item -12: 566T projectors use motor relay P/N 33427 or P/N 36520; 566EXT projectors use motor relay P/N 41304 or 41305. The appearance and connections for relay 41305 are the same as those for relay 36520 (Figure 5 inset), while the appearance and connections for relay 41304 are the same as those for relay 33427 (Figure 5 inset). In the description for item -12 change the reference "figure 6" to "figure 5."

f. Item -30: 566T projectors use motor assembly P/N 011893; 566EXT projectors use motor assembly P/N 012312.

g. Item -36: 566T and 566EXT projectors use two of motor mounting bracket P/N 31263.

h. Items -36B through -36E: Not used on 566T and 566EXT projectors.

i. Item -36F: 566T projectors use the stability bracket P/N 41125; 566EXT projectors use bracket P/N 41303.

j. Items -37 through -40: These parts are not used on 566T and 566EXT projectors. The integrated circuit amplifier assembly for T-series models mounts in the same position occupied by the amplifier power supply assembly (item -38) as shown in Figure A, this Supplement.

k. In the upper left-hand corner of Figure 5, note that 566T projectors use the same pulleys (item -34) as code AC projectors, while the 566EXT projectors, while the 566EXT projectors use the same pulleys as code B projectors.

FIGURE 6 PARTS LIST. Note the following application of parts to 566T and 566EXT projectors.

a. Item -5: 566T projectors use relay P/N 40885; 566EXT projectors use relay P/N 40971.

b. Item -12: 566T projectors use solenoid assembly P/N 013896; 566EXT projectors use solenoid assembly P/N 013903.

FIGURE 7 PARTS LIST. Note the following application of parts to 566T and 566EXT projectors.

a. Item -6: Spacer P/N 40882 is not used on 566T and 566EXT projectors.

b. Item -12: 566T and 566EXT projectors use soundhead assembly P/N 013484.

NOTE: 566T and 566EXT projectors use current film path components only (items -18, -21 and -23).

FIGURE 8 PARTS LIST. Note the following application of parts to 566T and 566EXT projectors.

a. Item -3: 566T and 566EXT projectors use rotary switch bracket P/N 41129.

b. Item -4: 566T and 566EXT projectors use rotary switch P/N 43267.

c. Items -7 through -13: These parts are not used on 566T and 566EXT projectors. See Figure A, this bulletin, for integrated circuit amplifier assembly and its mounting parts.

d. Item -14: Four screws P/N 31499 are used with washers P/N 14175 (item -15) to attach the blower assembly for the 566T and 566EXT projectors.

e. Item -17: 566T projectors use blower assembly P/N 013375; 566EXT projectors use blower assembly P/N 013904.

f. Items -27 through -33: These parts are not used on 566T and 566EXT projectors.

g. Item -37: 566T and 566EXT projectors use projector base P/N 43375.

FIGURE 9 PARTS LIST. Front reel arm assembly P/N 09849 is used in 566T and 566EXT projectors and all parts listed in the Figure 9 list are applicable.

FIGURE 10 PARTS LIST. Rear reel arm assembly P/N 03980 is used in 566T and 566EXT projectors and all parts listed in the Figure 10 list are applicable.

FIGURE 11 PARTS LIST. Note the following application of parts to 566T and 566EXT projectors, noting that the soundhead assembly for 566T and 566EXT models bears part number 013484.

a. Item -1: 566T and 566EXT projectors use exciter lamp cover assembly P/N 013333.

b. Item -18: 566T and 566EXT projectors use leadwire assembly P/N 09840.

c. Item -22: 566T and 566EXT projectors use sound drum and shaft assembly P/N 013398.

d. Item -24: 566T and 566EXT projectors use light pipe and silicon cell assembly P/N 013486.

e. Item -34: Note that all current projectors use swage type screw P/N 30804 to attach stabilizer arm (item -35).

f. Item -39: 566T and 566EXT projectors use soundhead assembly P/N 013331.

FIGURE 12 PARTS LIST. The complete lamphouse assembly P/N 013909 is used in 566T and 566EXT projectors and all parts listed in the Figure 12 list are applicable.

FIGURE 13 PARTS LIST. 566T projectors use blower assembly P/N 013375, while 566EXT projectors use blower assembly P/N 013904. Note, in the Figure 13 parts list, the application of parts to 566T and 566EXT projectors.

a. Item -3: 566T projectors use 60-cycle motor assembly P/N 013374; 566EXT projectors use 50-cycle motor assembly P/N 013905.

b. Item -4: 566T projectors use blower wheel P/N 43277; 566EXT projectors use blower wheel P/N 43276.

c. Item -5: 566T projectors use blower housing P/N 013384; 566EXT projectors use blower housing P/N 013906.

d. Items -7 through -9 do not apply to 566T and 566EXT projectors.

FIGURE 14 PARTS LIST. Note the following application of parts to 566T and 566EXT projectors.

NOTE: All items coded AB are applicable to the 566T and 566EXT projectors.

a. Items -1 and -2: 566T and 566EXT projectors use one upper hinge pin P/N 31958 and one lower hinge pin P/N 31957.

b. Item -5: 566T and 566EXT projectors use lens carrier assembly P/N 013354.

c. Item -25: 566T and 566EXT projectors use take-up drive sprocket assembly P/N 013949.

d. Item -33: 566T and 566EXT projectors use sprocket gear assembly P/N 013948.

e. Item -35: 566T and 566EXT projectors use upper sprocket assembly P/N 012327.

f. Item -36: 566T and 566EXT projectors use lower sprocket assembly P/N 013946.

FIGURE 14A PARTS LIST. Figure 14A applies only to manual threading projectors, Model 560A.

FIGURE 15 PARTS LIST. All Figure 15 parts are applicable to 566T and 566EXT projectors.

FIGURE 16 PARTS LIST. All Figure 16 parts are applicable to 566T and 566EXT projectors.

FIGURE 17 PARTS LIST. Note the following application of parts to 566T and 566EXT projectors.

a. Item -2: 566T projectors use mechanism pulley P/N 40835; 566EXT projectors use pulley P/N 40959.

b. Items -7 and -7A: 566T projectors use screw P/N 30808 to attach bracket (item -8); 566EXT projectors use screw P/N 30810 and washer P/N 613379.

c. Items -10, -10A and 11: 566T projectors use heat baffle P/N 40953; 566EXT projectors use baffle bracket assembly P/N 013037, deflector P/N 40962 and flat washers P/N 21238.

d. Item -14: 566T and 566EXT projectors use current shutter P/N 41309.

e. Item -23: 566T and 566EXT projectors use current pull-down cam P/N 41307.

f. Item -31: 566T and 566EXT projectors use swage type screws P/N 30804.

g. Item -48: 566T and 566EXT projectors use housing and bearing assembly P/N 013348.

FIGURE 18 PARTS LIST. All Figure 18 parts are applicable to 566T and 566EXT projectors.

FIGURE 19 PARTS LIST. 566T and 566EXT projectors are equipped with lens carrier assembly P/N 013354 which uses those parts which are coded AB (items -5, -6 and -7).

FIGURE 20 PARTS LIST: Note the following application of parts to 566T and 566EXT projectors.

a. Item -4: 566T and 566EXT projectors use spring retaining cover P/N 36078.

FIGURES 21 THROUGH 27: These illustrations do not apply to 566T and 566EXT projectors. Refer to Figures A through E for parts replacement information and wiring diagrams covering the integrated circuit models.

FIG. & INDEX NO.	PART NO.	DESCRIPTION 1 2 3 4 5 6 7	UNITS PER ASSY	USABLE ON CODE
		INTEGRATED CIRCUIT AMPLIFIER 566T (CODE A) 566EXT (CODE B)		
B-	014133	AMPLIFIER ASSEMBLY, Integrated circuit, complete	1	A
B-	014134	AMPLIFIER ASSEMBLY, Integrated circuit, complete	1	B
-1	700008	. SCREW	1	A
-1	7856	. SCREW	1	B
-2	600735	. WASHER	1	
-3	40814	. CLIP, Leadwire retaining	1	
-4	36848	. SCREW	4	
-5	35164	. NUT, Hex	4	
-6	43204	. TRANSFORMER, Power	1	
-7	36848	. SCREW	1	
-8	014021	. BARRETTER AND BRACKET ASSEMBLY	1	
-9	19233	. NUT, Hex	1	
-10	19154	. WASHER, Lock	1	
-11	43209	. CIRCUIT BREAKER	1	A
-11	43283	. CIRCUIT BREAKER	1	B
-12	621132	. SCREW	3	
-13	34784	. WASHER	3	
-14	36848	. SCREW	3	
-15	013852	. CIRCUIT BOARD, Amplifier (see Figure C for parts)	1	
-16	013853	. CIRCUIT BOARD, Power supply (see Figure C for parts)	1	
-17	31685	. JACK, Auxiliary speaker	1	
-18	41130	. PLATE, Amplifier mounting	1	
	41184	TONE AND VOLUME CONTROL (See Figure A)	REF	

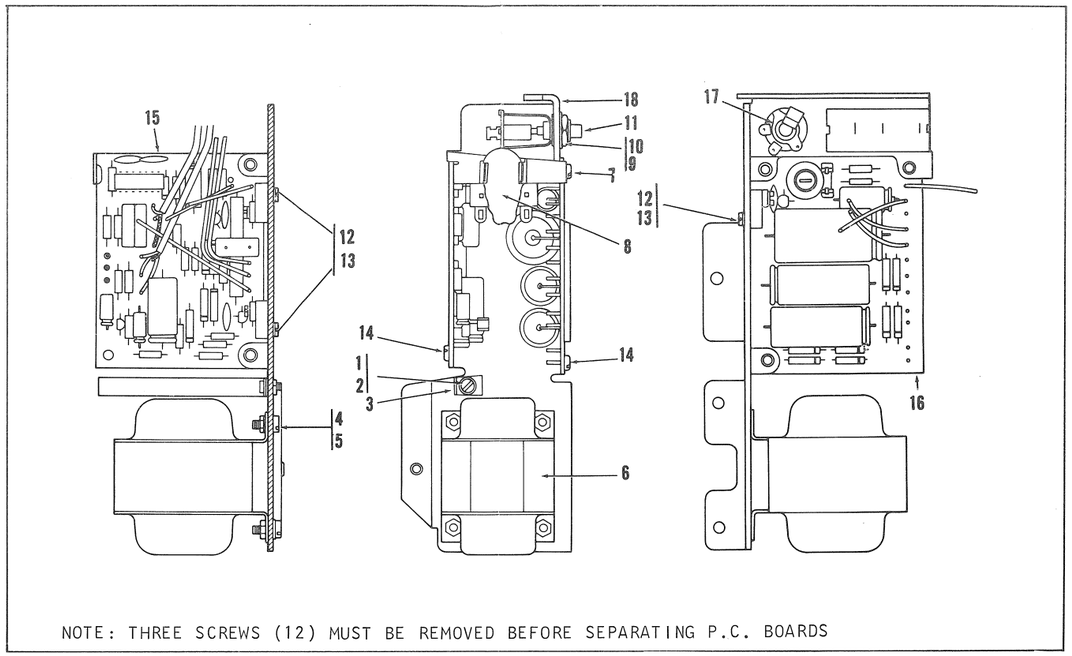

Figure B. Integrated Circuit Amplifier Assembly, Complete

FIGURE C

AMPLIFIER CIRCUIT BOARD COMPONENTS (013852)

REFERENCE DESIGNATION	PART NO.	DESCRIPTION
C1	41398	CAPACITOR
C2, C3	88654	CAPACITOR
C5	41172	CAPACITOR
C6	41171	CAPACITOR
C7	41394	CAPACITOR
C8	29630	CAPACITOR
C9	41392	CAPACITOR
C10, C11	41393	CAPACITOR
C12	31733	CAPACITOR
D1, D2	43210	DIODE
D3 to D6	41173	DIODE
IC-1	41180	INTEGRATED CIRCUIT
Q1	41175	TRANSISTOR
Q2	41176	TRANSISTOR
Q3	41177	TRANSISTOR

REFERENCE DESIGNATION	PART NO.	DESCRIPTION
R1	41192	RESISTOR
R2	41191	RESISTOR
R3	41190	RESISTOR
R4	41189	RESISTOR
R5	31743	RESISTOR
R8	38187	RESISTOR
R9	41188	RESISTOR
R10	41186	RESISTOR
R11	31732	RESISTOR
R12	38182	RESISTOR
R13	41193	RESISTOR
R14, R15	36074	RESISTOR
R16, R17	765286	RESISTOR
R18, R19	36311	RESISTOR
R20, R21	43202	RESISTOR
R22	41194	RESISTOR
Q4	013950	TRANSISTOR ASSEMBLY
Q5	013955	TRANSISTOR ASSEMBLY

POWER SUPPLY CIRCUIT BOARD COMPONENTS (013853)

C13, C14	41396	CAPACITOR
C15	41397	CAPACITOR
C16	41395	CAPACITOR
C17	41393	CAPACITOR
D7 to D14	41174	DIODE

Q6	41177	TRANSISTOR
R23, R25	31743	RESISTOR
R24	41185	RESISTOR
Q7	013950	TRANSISTOR ASSEMBLY

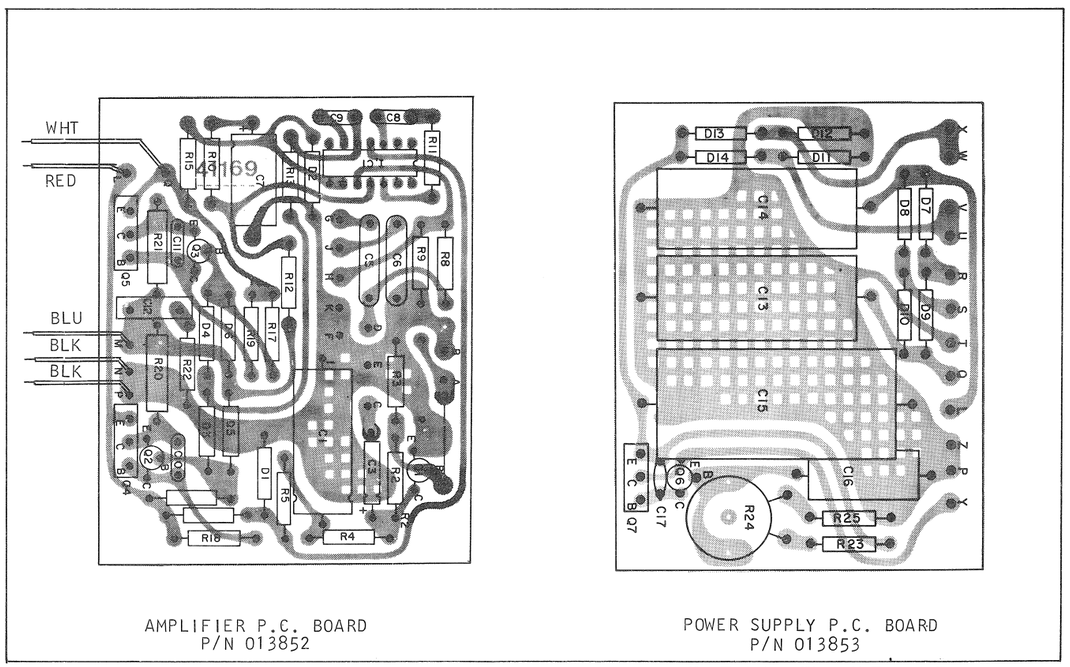

Figure C. Printed Circuit Board Components (Integrated Circuit Style)

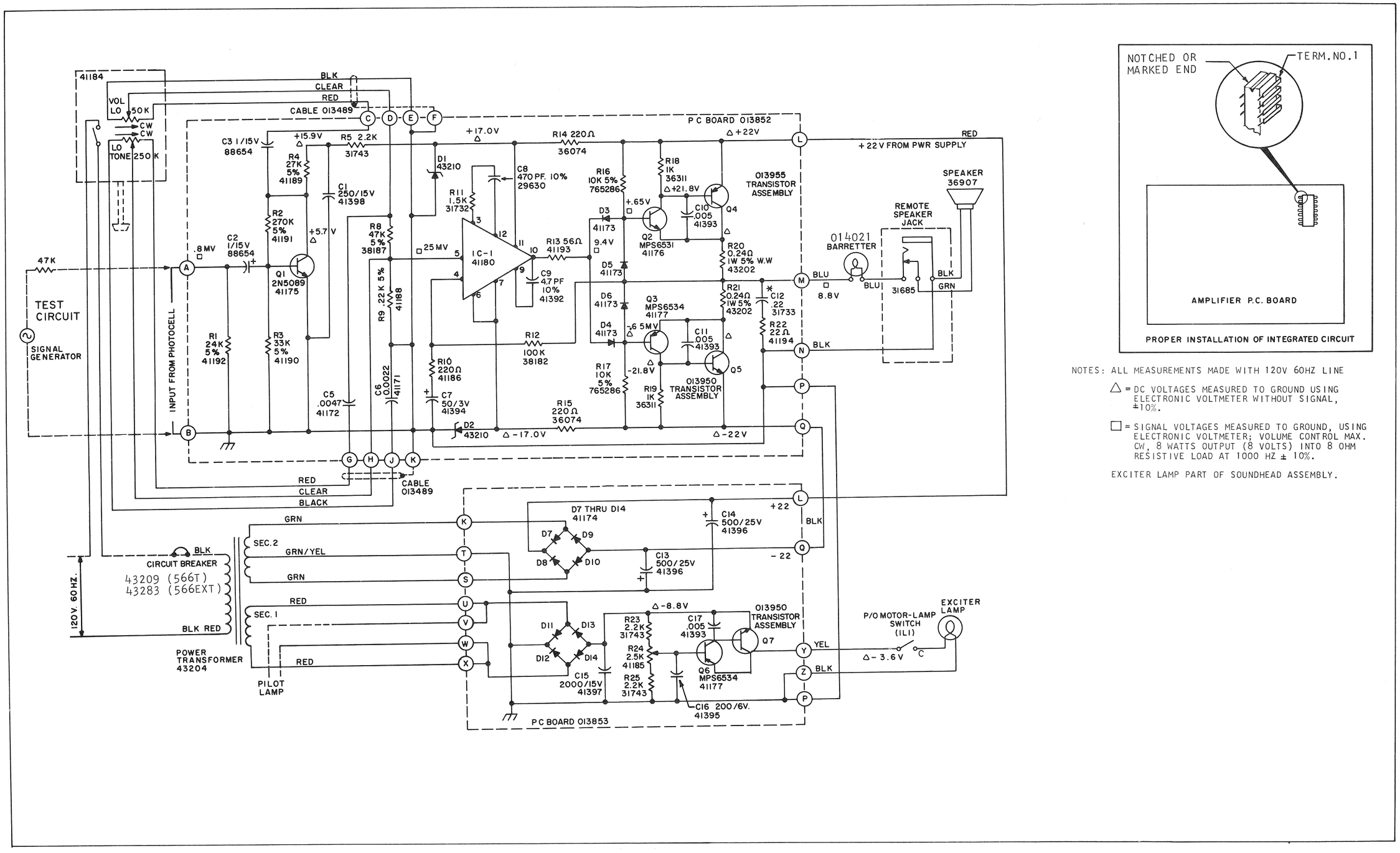

PROPER INSTALLATION OF INTEGRATED CIRCUIT

NOTES: ALL MEASUREMENTS MADE WITH 120V 60HZ LINE

△ = DC VOLTAGES MEASURED TO GROUND USING ELECTRONIC VOLTMETER WITHOUT SIGNAL, ±10%.

□ = SIGNAL VOLTAGES MEASURED TO GROUND, USING ELECTRONIC VOLTMETER; VOLUME CONTROL MAX. CW, 8 WATTS OUTPUT (8 VOLTS) INTO 8 OHM RESISTIVE LOAD AT 1000 HZ ± 10%.

EXCITER LAMP PART OF SOUNDHEAD ASSEMBLY.

Figure D. Amplifier Schematic Wiring Diagram (566T and 566EXT Projectors)

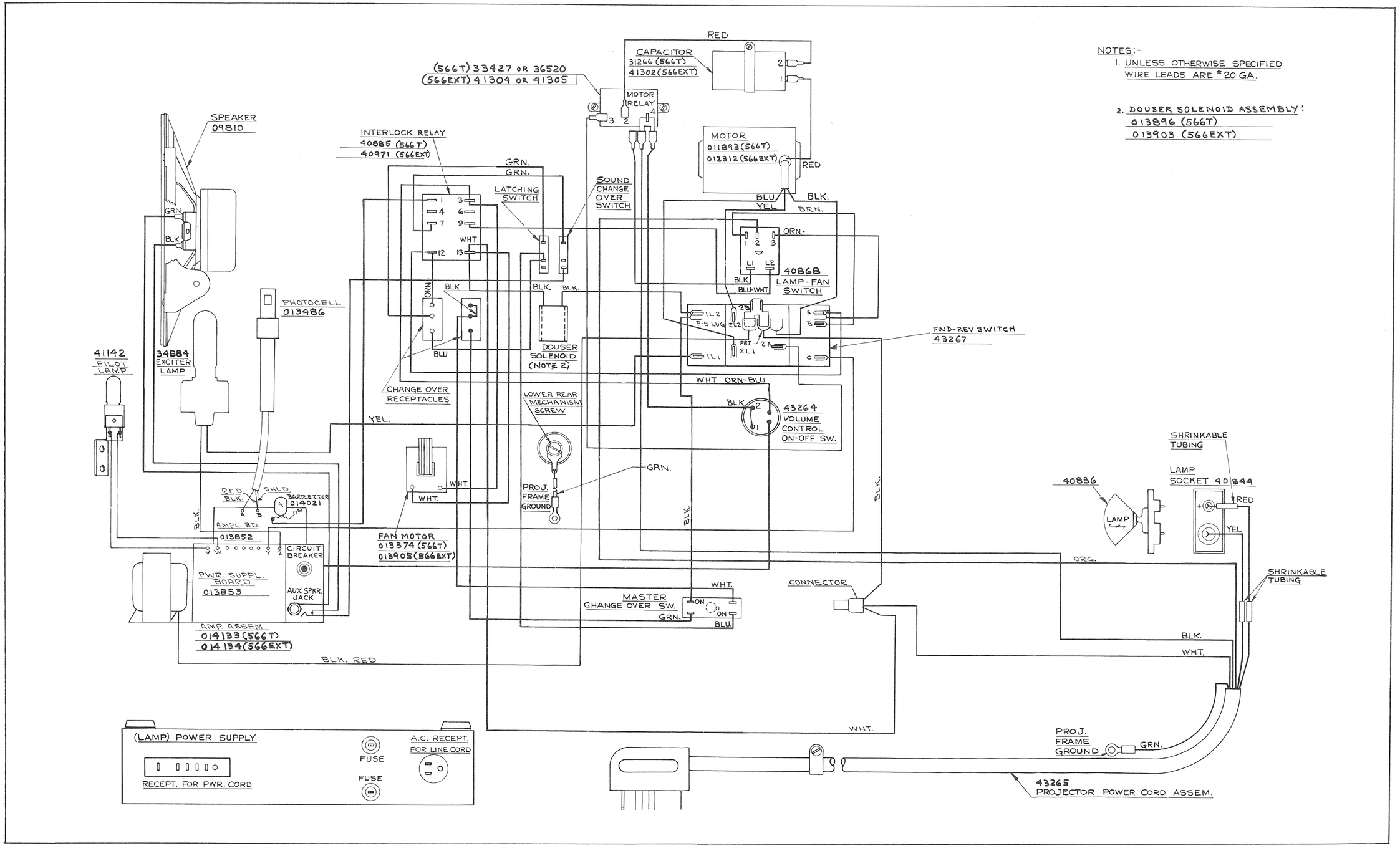

Figure E. Projector Pictorial Wiring Diagram
(566T and 566EXT Projectors)

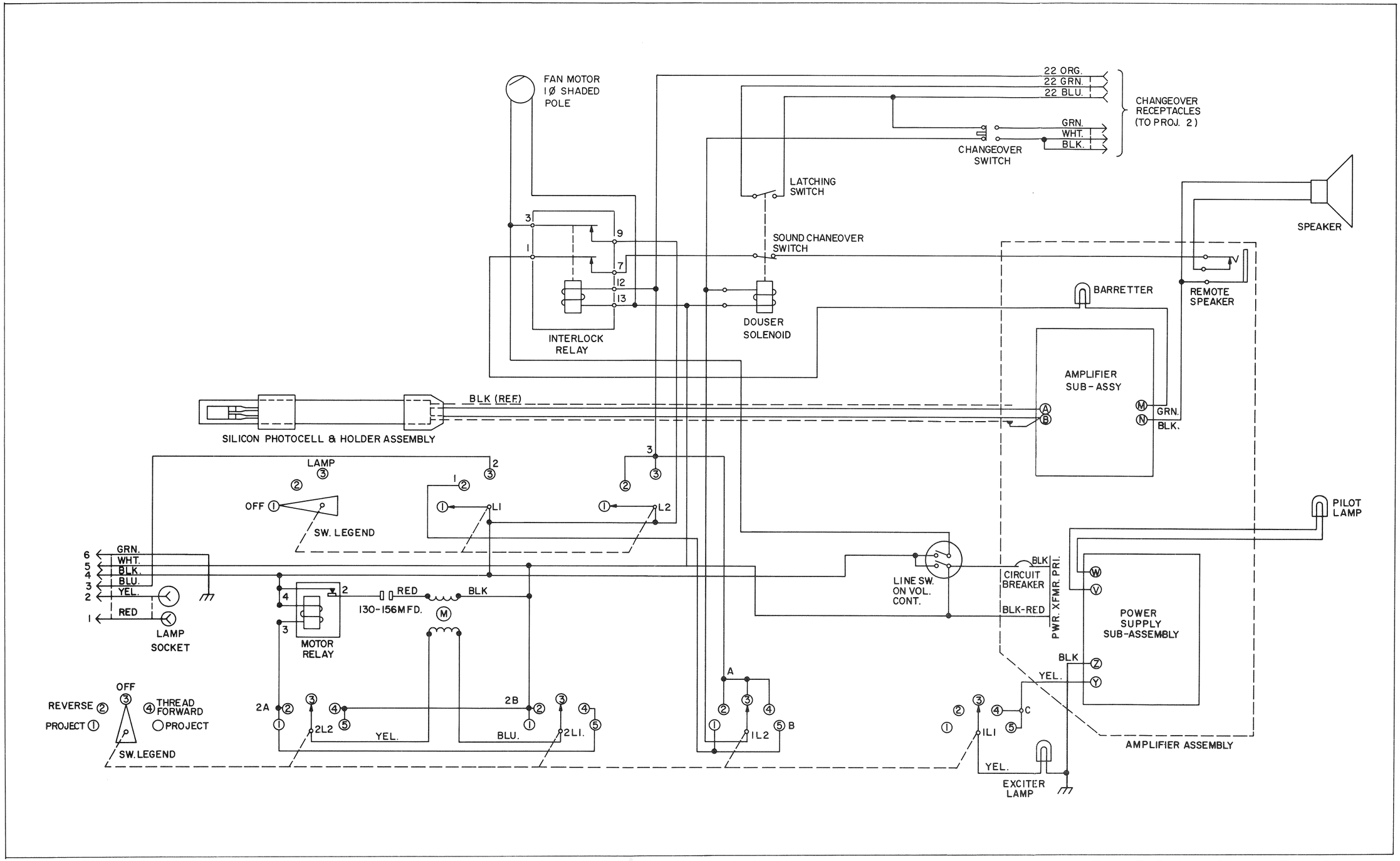

Figure F. Projector Schematic Wiring Diagram
Design 566T and 566EXT