JANUARY 1964 NO. 768482

Servicing the

KODAK PAGEANT SOUND PROJECTOR, MODEL AV-256-TR

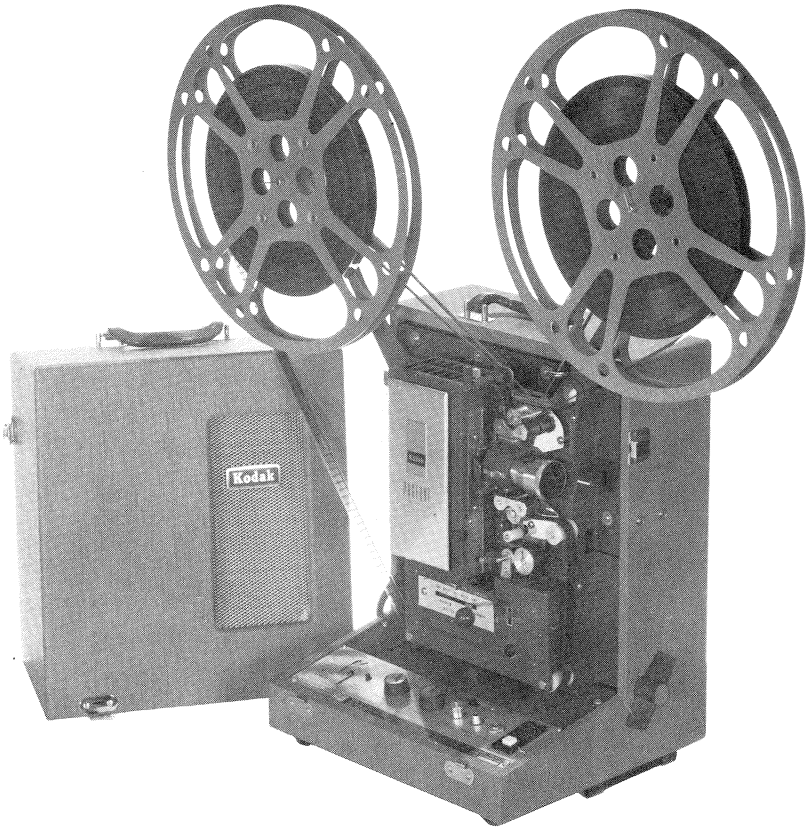

EASTMAN KODAK COMPANY
Apparatus Service Department
ROCHESTER, NEW YORK 14650

Service information concerning the mechanism of this projector can be found in Service Manual #768376 for the KODAK PAGEANT Sound Projector, Model AV-126-TR. Since the amplifier is different, these instructions cover only the amplifier and power supply.

1. SOUND SYSTEM GENERAL INFORMATION

Transistors:	3 - 2N217 or 2N408 or 2N1370, 1 - 2N1038, 1 - 2N1136, 2 - 2N1136A
Exciter lamp:	6 volt 1.0 ampere, ASA Code BSK
Input impedances:	Microphone, 5,000 ohms; Phono, 0.5 megohms
Output impedance:	16 ohms
Frequency response:	40 to 18,000 cycles ± 3 db

2. SOUND SYSTEM SERVICE HINTS

See Service Manual #768376 for KODAK PAGEANT Sound Projector, Model AV-126-TR.

3. AMPLIFIER SERVICING

To remove amplifier from the case, refer to Section 5.2 in Service Manual #768376 and to "Switch and Terminal Connections" diagram in this instruction, page 6, for leads to remove.

3.1 Power Supply

Since it is necessary to disconnect only the solar cell lead when removing the amplifier from the case, the amplifier can still be operated and tested, although it may sometimes be convenient to use extension leads to allow easier accessibility. If a separate power supply is required, use a source of DC voltage (with a current capacity of about 750 milliamperes) that will supply a negative 60 to 70 volts measured across the amplifier filter capacitor C-13. Tool #1078 is available for this purpose, or one can be made as shown below, using parts from the amplifier power supply.

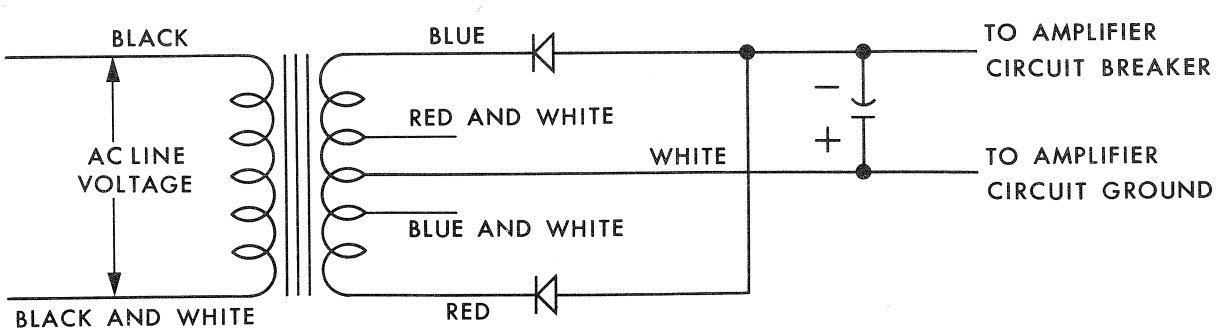

1. # 161837 TRANSFORMER
2. # 164193 SILICON RECTIFIER (RCA TYPE IN 3253 200 PIV, 750 MA)
1. # 161832-1500 MFD, 70 VDC, ELECTROLYTIC CAPACITOR

TAPE ENDS OF BLUE AND WHITE AND RED AND WHITE LEADS (NOT USED)

3.2 Service Hints

3.2.1 Although many of the components can be removed and replaced without separating the printed circuit board from the amplifier plate, these operations can be more easily performed if the amplifier is "opened up". To do this, proceed as follows:

a) Remove the control knobs (tone control-friction fit, volume control - setscrew).
b) Remove the four circuit board mounting screws and swing board over.

3.2.2 The 50-ohm bias control (R-25) is variable so that the exact value of correct bias may be selected for any given set of transistors. If any of the transistors are replaced, it may be necessary to adjust R-25 to obtain the proper undistorted output (Section 3.3.1).

3.2.3 The 25K potentiometer (R-41) is used to compensate for the slight variations in the sensitivity of different solar cells. It will require adjusting only if the solar cell, exciter lamp, or transistors Q1 or Q2 are changed. Adjust to obtain the proper undistorted output (Section 3.3.1).

3.2.4 Rotation of the 2.5K frequency response control (R-40) over its full swing will vary the response at 7,000 cycles + 3, - 2 db.

3.2.5 When replacing either Q6 or Q7 (2N1136 A Transistor) apply a moderate amount of Transistor Z-5 Silicon Compound No. 8101 (General Cement Electronics Company) to both sides of the insulating washers.

3.3 Specifications (input voltage to amplifier, 117)

3.3.1 Output:

* 17 volts minimum using 400 cycle test film as signal source, no visible distortion on an oscilloscope (a slight amount of "filling-in" may be visible in the lower half of the signal which does not affect the undistorted output).

3.3.2 Sensitivity (tone control fully counterclockwise)

a) Film Channel:

18 watts (*17 volts) output, 1,000 cycle signal of 0.75 millivolts ± 1.5 db applied directly to the solar cell input socket.

b) Microphone Channel:

18 watts (*17 volts) output, 1,000 cycle signal of 22 millivolts ± 3 db applied directly to the microphone input receptacle.

c) Phonograph Channel:

18 watts (*17 volts) output, 1,000 cycle signal of 220 millivolts ± 3 db applied directly to the phonograph input receptacle.

3.3.3 Power Supply:

a) DC voltage to the amplifier:

60 to 70 volts (no load) measured across the filter capacitor C-13.

b) DC voltage to the exciter lamp:

4.0 ± 0.2 volts with ripple content not exceeding 100 millivolts, RMS, measured across a resistor load of 5 ohms ± 1%, 5 watts (in place of the exciter lamp).

* Measured across a 16 ohm, 50 watt, dummy speaker load.

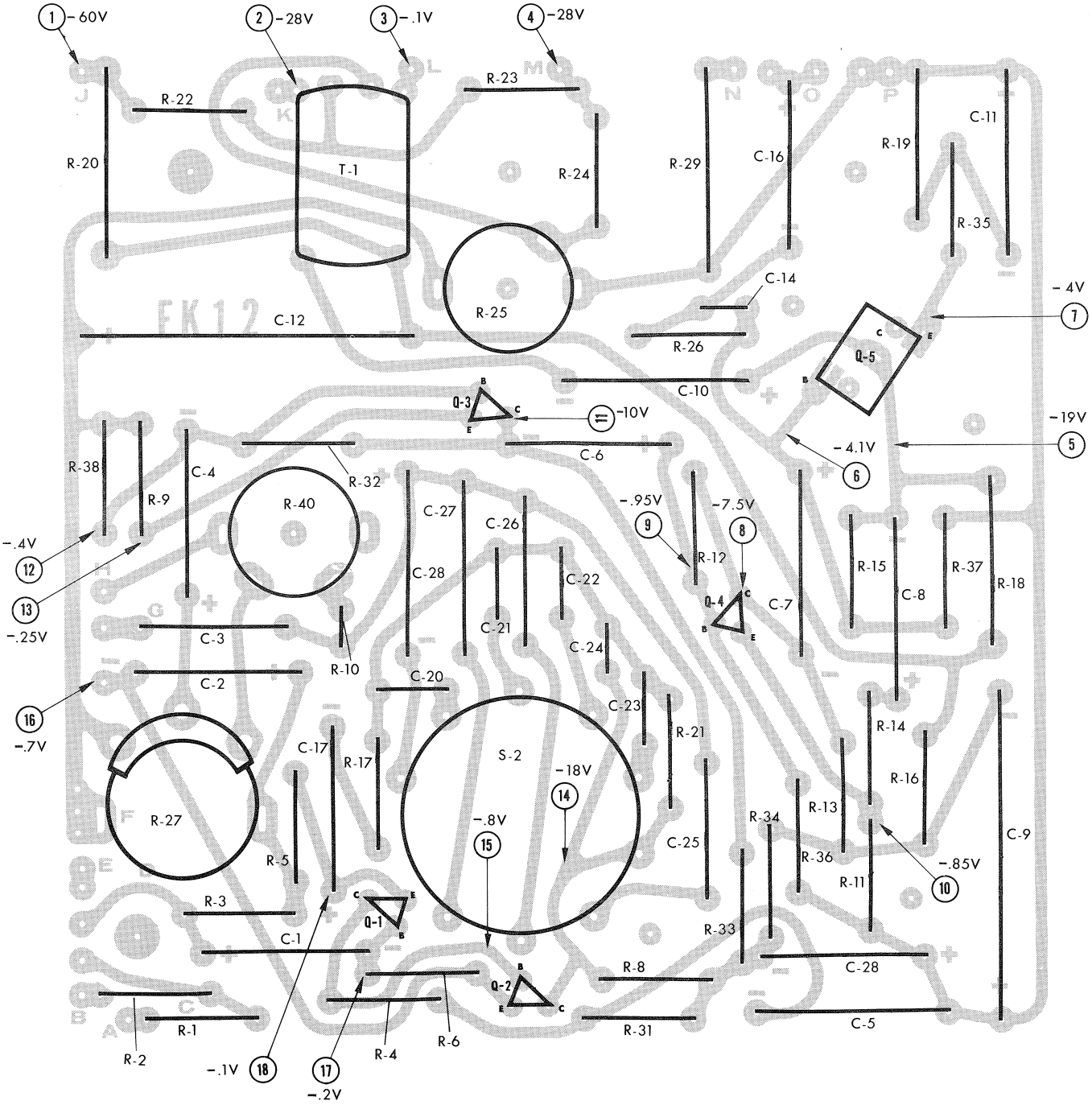

VOLTAGE-CHECK AND COMPONENT LOCATING DIAGRAM

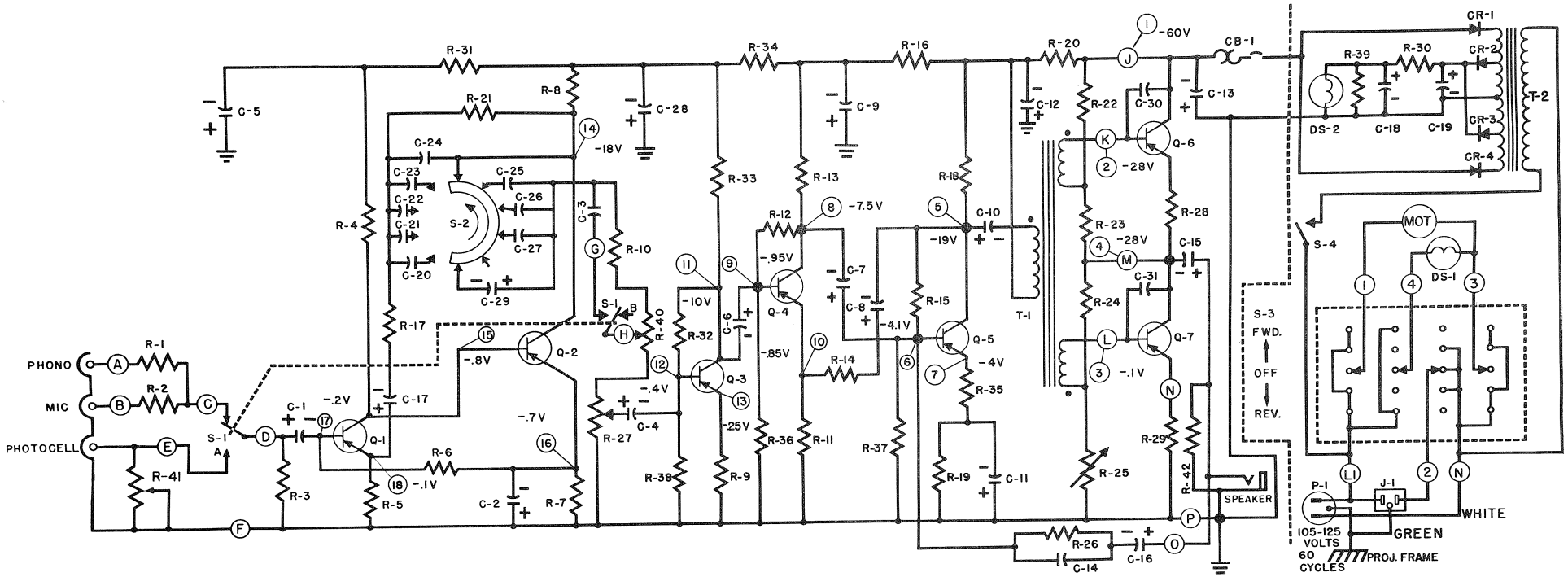

R-1	126101	470 K 1/2 WATT ±10%
R-2	78671	47K 1/2 WATT ±10%
R-3	147756	1.8 K 1/2 WATT ±10%
R-4	126900	10 K 1/2 WATT ±10%
R-5	136709	47Ω 1/2 WATT ±10%
R-6	78671	47K 1/2 WATT ±10%
R-7	119816	1K 1/2 WATT ±10%
R-8	126900	10K 1/2 WATT ±10%
R-9	162891	27Ω 1/2 WATT ±5%
R-10	154866	5.6K 1/2 WATT ±10%
R-11	162892	33Ω 1/2 WATT ±5%
R-12	161824	51K 1/2 WATT ± 5%
R-13	160123	680Ω 1/2 WATT ±5%
R-14	123301	1.1K 1/2 WATT ±5%
R-15	126905	27K 1/2 WATT ±10%
R-16	866521	390Ω 1/2 WATT ±10%
R-17	872379	1.2 K 1/2 WATT ±10%
R-18	165557	600 Ω 5 WATTS ±5% W W
R-19	161827	91Ω 1 WATT ±5%
R-20	127852	300Ω 5 WATT ±10% W W
R-21	872443	12 K 1/2 WATT ±10%
R-22	126900	10 K 1/2 WATT ±10%
R-23	161828	18 Ω 1/2 WATT ±10%
R-24	126900	10 K 1/2 WATT ±10%

R-25	161829	BIAS CONTROL 50Ω ±20%
R-26	147756	1.8 K 1/2 WATT ±10%
R-27	159427	VOLUME CONTROL 5K ± 30 %
R-28	161830	1Ω 2 WATT ±5% WIREWOUND
R-29	161830	1Ω 2 WATT ±5% WIREWOUND
R-30	159633	25Ω 25 WATT ±10%
R-31	126394	4.7K 1/2 WATT ±10%
R-32	78671	47K 1/2 WATT ±10%
R-33	147756	1.8K 1/2 WATT ±10%
R-34	872378	100 Ω 1/2 WATT ±10%
R-35	161828	18Ω 1/2 WATT ±10%
R-36	126901	6.8 K 1/2 WATT ±10%
R-37	872443	12K 1/2 WATT ±10%
R-38	112546	2.7K 1/2 WATT ±10%
R-39	154868	500Ω 2 WATT ±10% W W
R-40	161857	CONTROL-FREQUENCY RESPONSE 2.5K
C-1	161022	25 MFD 10 VDC ELECTROLYTIC
C-2	161022	25 MFD 10 VDC ELECTROLYTIC
C-3	161858	.015 MFD 50 VDC MYLAR
C-4	161022	25 MFD 10 VDC ELECTROLYTIC
C-5	164758	40 MFD 25 VDC ELECTROLYTIC
C-6	161022	25 MFD 10 VDC ELECTROLYTIC
C-7	159413	10 MFD 50 VDC ELECTROLYTIC

C-8	159413	10 MFD 50 VDC ELECTROLYTIC
C-9	159410	125 MFD 50 VDC ELECTROLYTIC
C-10	165556	25 MFD 50 VDC ELECTROLYTIC
C-11	161831	75 MFD 6 VDC ELECTROLYTIC
C-12	159410	125MFD 50VDC ELECTROLYTIC
C-13	161832	1500 MFD 70 VDC ELECTROLYTIC
C-14	143229	.0015 MFD ±10% 50VDC DISC
C-15	159416	1500MFD 50VDC ELECTROLYTIC
C-16	161022	25 MFD 10VDC ELECTROLYTIC
C-17	161022	25 MFD 10VDC ELECTROLYTIC
C-18	159634	1300 MFD 35VDC ELECTROLYTIC
C-19	159634	1300 MFD 35VDC ELECTROLYTIC
C-20	161020	.005 MFD 50VDC MIN. CERAMIC
C-21	159420	.004 MFD 50VDC MIN. CERAMIC
C-22	161021	.0018 MFD 50 VDC MIN. CERAMIC
C-23	161021	.0018 MFD 50 VDC MIN. CERAMIC
C-24	159418	100 MMFD 50 VDC MIN. CERAMIC
C-25	159409	.027 MFD 100 VDC MIN. MYLAR
C-26	159414	.033 MFD 100 VDC MIN. MYLAR
C-27	159419	.047 MFD 100 VDC MIN. MYLAR
C-28	164758	40 MFD 25 VDC ELECTROLYTIC
C-29	159413	10 MFD 50 VDC ELECTROLYTIC
C-30	164757	.001 MFD ±10% 50 VDC MIN. CERAMIC
C-31	164757	.001 MFD ±10% 50 VDC MIN. CERAMIC

CR-1	164193	750 MA 200 PIV DIODE
CR-2	164193	750 MA 200 PIV DIODE
CR-3	164193	750 MA 200 PIV DIODE
CR-4	164193	750 MA 200 PIV DIODE
Q-1	166893	TRANSISTOR 2N217 OR 2N408 OR 2N1370
Q-2	166893	TRANSISTOR 2N217 OR 2N408 OR 2N1370
Q-3	166893	TRANSISTOR 2N217 OR 2N408 OR 2N1370
Q-4	162893	TRANSISTOR 2N1038 PNP
Q-5	161849	TRANSISTOR 2N1136 PNP
Q-6	161835	TRANSISTOR 2N1136A PNP
Q-7	161835	TRANSISTOR 2N1136A PNP
DS-1		PROJECTION LAMP
DS-2	120359	PHOTOCELL EXCITER LAMP
S-1	154870	INPUT SELECTOR SWITCH
S-2	159435	TONE CONTROL SWITCH
S-3	159533	PROJECTOR CONTROL SWITCH
S-4	159445	AMPLIFIER CONTROL SWITCH
J-1		THREADLAMP SOCKET
CB-1	151383	CIRCUIT BREAKER
T-1	161836	DRIVER TRANSFORMER
T-2	166437	POWER TRANSFORMER
P-1	159551	POWER CORD
R-41	164603	25 K POTENTIOMETER
R-42	154868	500Ω 2 WATTS ±10% W W

AMPLIFIER SCHEMATIC CIRCUIT

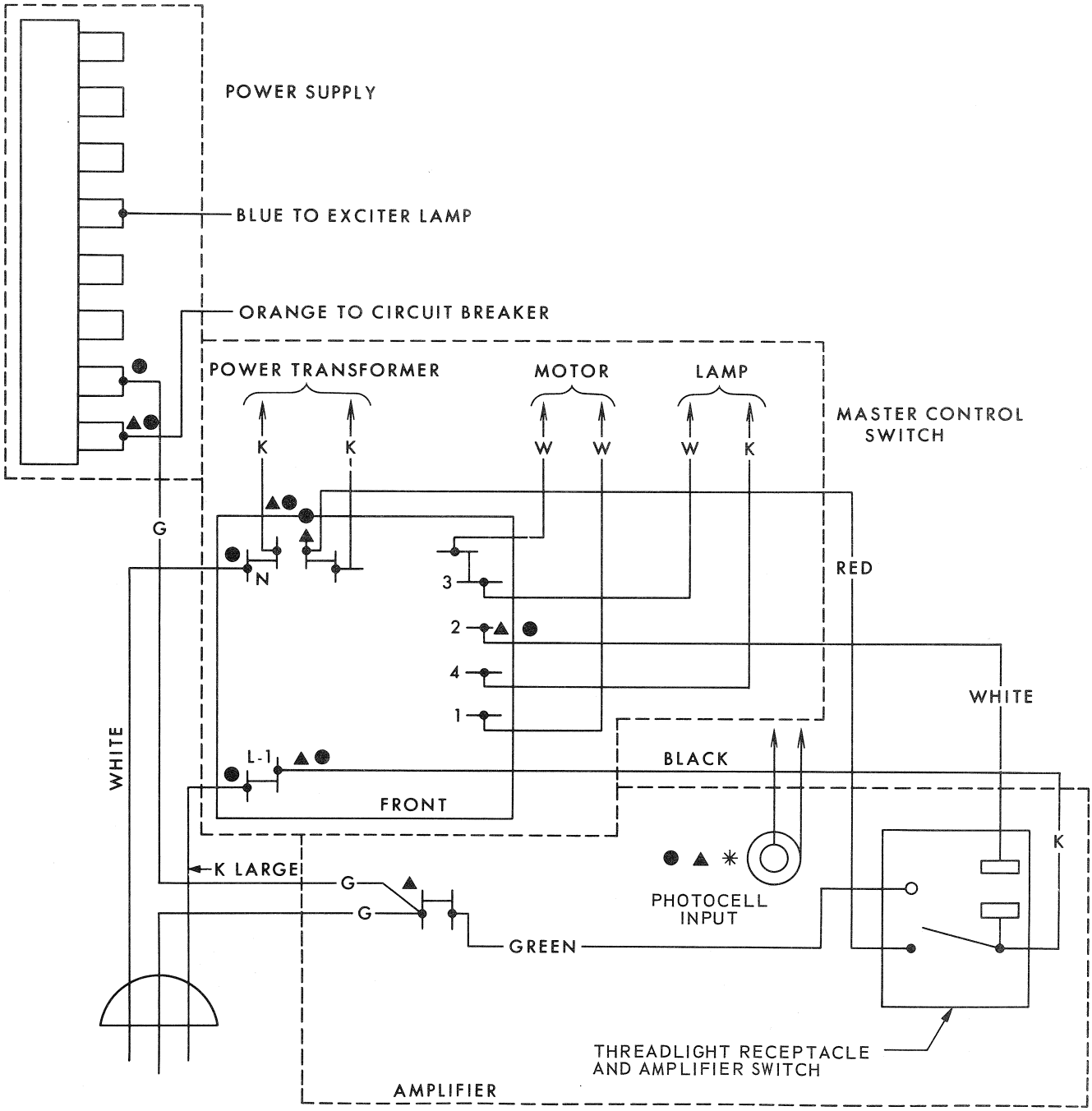

✳ DISCONNECT TO REMOVE AMPLIFIER (AMPLIFIER WILL STILL OPERATE)

▲ DISCONNECT TO REMOVE AMPLIFIER COMPLETELY

● DISCONNECT TO REMOVE MECHANISM

SWITCH AND TERMINAL CONNECTIONS (March 1963)

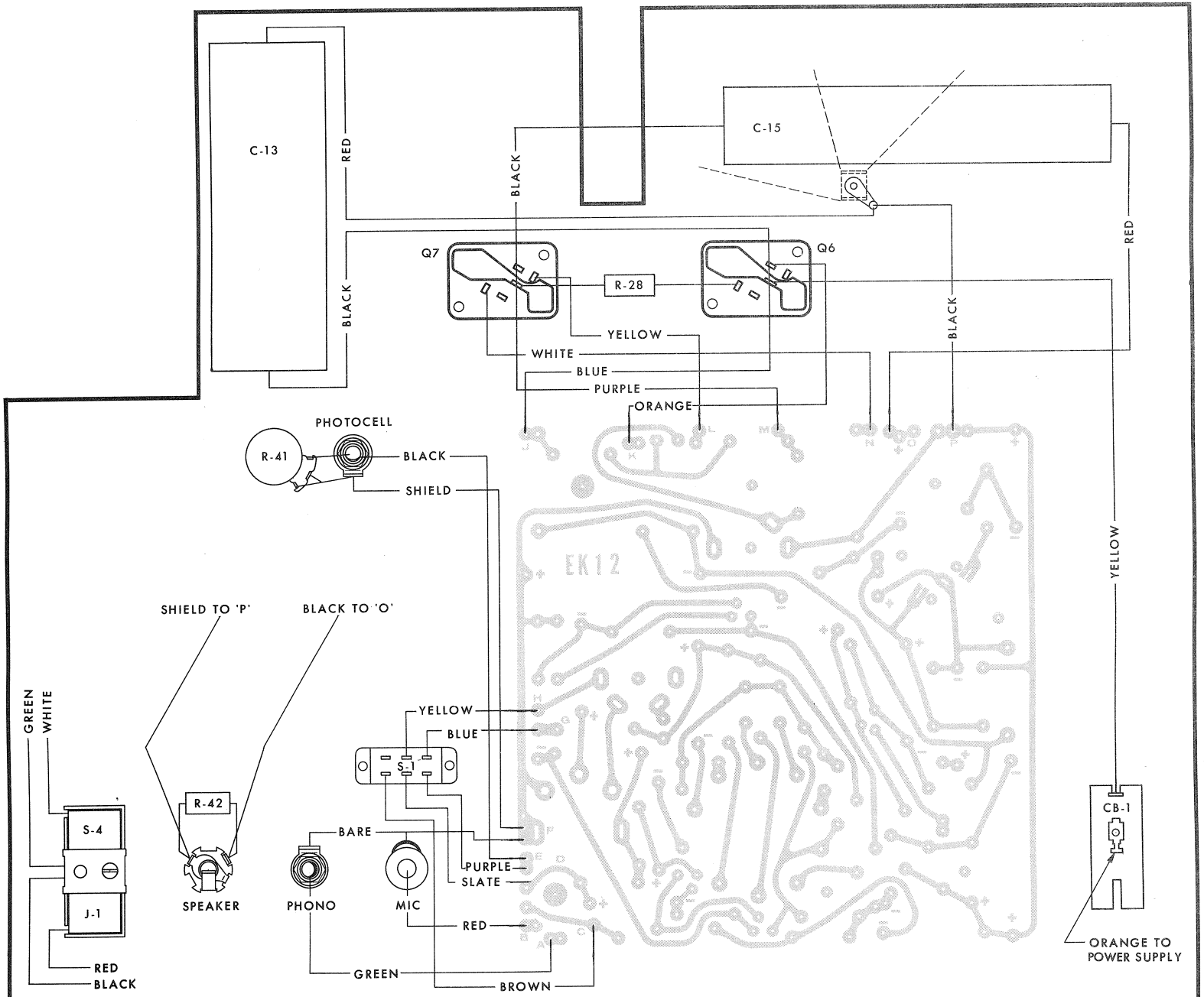

AMPLIFIER WIRING DIAGRAM FOR PAGEANT SOUND PROJECTOR, MODEL AV-256-TR

APRIL 1963

NO. 768376

Servicing the

Kodak Pageant Sound Projector, Model AV-126-TR

EASTMAN KODAK COMPANY

Apparatus Service Department

ROCHESTER 4, NEW YORK

TABLE OF CONTENTS

KODAK PAGEANT SOUND PROJECTOR, MODEL AV-126-TR

1. GENERAL SPECIFICATIONS

1.1 ELECTRICAL

Power service required: 105 to 125 volt, 60 cycle ac only

Power consumed: with 750 watt lamp - 950 watts
with 1000 watt lamp - 1200 watts
with 1200 watt lamp - 1400 watts

Projection lamps: 750 watt, ASA Code DDB
1000 watt, ASA Code DFD
1200 watt, ASA Code DHT

1.2 MECHANISM

Claw protrusion: .030" - .045" (Section 5.18.3).
Pull-through tension: 1½ - 2½ ounces (Section 5.3.4).
Side guide tension: 1 - 1½ ounces (Section 5.3.2).
Flywheel torque: 3 - 4 ½ ounce-inches (Section 5.15.3).
Pressure roller tension: 12 - 18 ounces.
Shutter shaft RPM, Sound Speed: 1440 ± 75
Shutter shaft RPM, Silent Speed: between 1020 and 1140

1.3 SOUND SYSTEM

Transistors: 5-2N109 or 2N1370, 2-2N307 or T1-370, 1-2N35 or 2N1304
Exciter lamp: 6 volt 1.0 ampere, ASA Code BSK
Input impedances: Microphone, 5,000 ohms; Phono, 0.5 megohms
Output impedance: 6 ohms
Frequency response: 30 to 20,000 cycles ± 3 db

2. SERVICE HINTS WITH SUGGESTED CHECK POINTS

2.1 MECHANISM

Projector will not run forward

Motor drive pulley belt slippage caused by oil on belt.
Clean oil off pulleys and replace belt.
Direction shifting adjustment (Section 5.22.5).
Shutter drive belt slippage.

Projector will not run in reverse

Motor drive pulley slippage caused by oil on rubber drive. Replace pulley.
Direction shifting adjustment (Section 5.22.5).
Shutter drive belt slippage.

Speed shifting operates improperly

Speed shifting adjustment (Section 5.22.3).
Speed shifting lever assembly (Section 5.22). If Type I, II, or III as described in Section 5.17 - replace parts as described.

Supply spindle binds - "A" serial number projectors

Replace complete supply reel arm assembly with late style #160722.

Streaks on screen - no film in projector

Projection lamp seating and adjustments (Section 5.29.1).
Condenser mount assembly.
Reflector.

Picture does not focus properly

Free movement of projection lens field flattener element.
Alignment of the aperture plate and pressure pad assembly (Section 5.3.2).

Picture cannot be framed properly

Stripped threads on framing shaft.
Framing shaft retaining ring missing.

Picture unsteady

Claw clearance in aperture plate slot (Section 5.3.4).
Pull-through tension (Section 5.3.4).
Free movement of side guides.
Side guide pressure (Section 5.3.2).
Cam follower.
Shutter shaft ball bearing.

Projector loses lower loop and tears film perforations

Claw clearance in aperture plate slot (Section 5.3.4).
Claw protrusion (Section 5.18.3).
Alignment of pressure pad rails with aperture plate rails (Section 5.3.2).
Pull-through tension (Section 5.3.4).
Sound drum pressure roller tension (Section 5.16.3).
In-and-out cam wear.
Cam follower wear.

Breaks splices

Condition of splices.
Excessive amount of pull-through tension (Section 5.3.4).
Sprocket clamp adjustment (Section 5.7.3 upper; Section 5.8.3 lower).

Does not take-up film

Take-up pulley pawl binds (Section 5.25.1).
Take-up belt.

Super-40 shutter fails to shift or shifts slowly

Locking lever action.
Blades bind (Section 5.19.2).
Shutter weight return spring tension.

Take-up (rear) reel spills film while projector is running in reverse

Take-up pulley assembly binds (Section 5.25.1).
Clean and lubricate the pulley pawl.

Spills film off supply (front) reel while projector is running in reverse

Supply spindle torque. Correct torque is between 7 and 14 ounce-inches. If torque is low, replace the tension adjusting spring #131363.

Film does not stay on sound drum when projector is running in reverse

Damping roller arm adjustment (Section 5.9.3).

Rewind does not function

Rewind belt.
Rewind mechanism.
Take-up and rewind spindles bind.
"A" serial number projectors - replace complete supply reel arm assembly with late style #160722.

Scratches film

Damper roller or sound drum pressure roller binds.
Rough or worn rails on pressure pad.
Alignment of pressure pad rails with aperture plate rails (Section 5.3.2).
Burrs, nicks, or abrasions on all surfaces over which film passes.

Supply (front) spindle rotates while projector is running forward, without film

Clearance between the sun gear and sprocket and the reversing mechanism internal gear (Section 5.12.3).

Film noise in gate

Excessive amount of pull-through tension (Section 5.3.4).
Clearance of claw in aperture plate slot (Section 5.3.4).

Mechanism noisy - no film in projector

Claw clearance in aperture plate slot (Section 5.3.4).
Claw protrusion (Section 5.18.3).
Claw return spring.
Claw retaining spring.
Pull-down cam.
In-and-out spring.
Shutter shaft bearings and ball bearing retaining screws.
Worm secure on shutter shaft.
Fan clearance in fan housing.
Tightness of fan housing-to-mechanism mounting screws.
Tightness of mechanism-to-case mounting screws.
Speed shifting adjustment (Section 5.22.3).
Motor bearings worn.
Belt damping rollers - "A" serial number projectors - modify projector using Kit #K-1655 (Section 5.17).

Pinging sound in mechanism, especially at silent speed

Drive belt operation.
Speed shifting adjustment (Section 5.22.3).

Motor noisy

Worn motor bearing.

Projector speed incorrect

Motor drive pulley belt and rubber drive slippage caused by oil on belt and/or rubber drive. Replace pulley and/or belt.
"A" serial number projector fit oil catcher #165193 and clip #164853 on end of motor shaft.

2.2 SOUND SYSTEM

No film sound (exciter lamp not lighted)

Exciter lamp connection to power supply.
Power supply.
Exciter lamp.

No film sound (exciter lamp lighted)

Plug in microphone and

1. If no sound through microphone, check amplifier.
2. If sound satisfactory through microphone, check following:
   - Threading of projector
   - Speaker plug contact
   - Speaker cable continuity
   - Sound optics adjustment (Section 5.30.1)
   - Solar cell cable and connection

Excessive hum

Solar cell cable plug connection.

Noise in speaker

Sound drum reverse drive chain (Section 5.11.3).
Projector electrical connections.
Electrical leakage between motor frame and projector or between amplifier and projector.
Fan clearance.
Motor grounding connection.

Microphonics

Seating of the exciter lamp in the socket.
Sound optics adjustment (Section 5.30.1).

Microphonics (microphone plugged in)

Microphone.
Microphone connector.

Weak or distorted sound

Fidelity control adjustment, (see projector instruction book).
Seating of exciter lamp in the socket.
Sound optics assembly and sound optics adjustment, (Section 5.30.1).

Speaker rattles at high sound volume

Speaker coil bottoming.
Speaker cone.

Sound unsteady

Threading of projector.
Damping roller action (Section 5.9.3).
Sound drum binds.
Sound drum reverse drive chain (Section 5.11.3).
Pressure roller action (Section 5.16.3).
Pressure roller tension (Section 5.16.3).
Lower sprocket.
Damping roller spring tension (Section 5.9.3).
Damping fluid in damping bearing cup (Section 5.9.2).

Sound still unsteady after above checks

Sound drum ball bearing roughness.
Binds in sound drum sprocket and pawl assembly.

Fidelity control does not peak

Positioning and adjustment of sound optics assembly - (Section 5.30.1).
Sound optics.

3. SERVICE LUBRICANTS

Available from:

EASTMAN KODAK COMPANY
APPARATUS PARTS SERVICE
ROCHESTER 4, NEW YORK

Or others as indicated:

A&O10-592 - Special Formula Lubricant

A&O61-3619 (CW6782) - Special Formula Lubricant

EK1150 Oil equivalent to:

Sunvis No. 916 (Sun Oil Co.)
Teresso No. 43 (Esso)
Pacemaker 150T (Cities Service)
Harmony "A" (Gulf Oil Co.)
Turbo No. 27 (Shell Oil Co.)

A&O61-3655 (CW8362) - Grease

Plastilube No. 1 (Warren Refining and Chemical Co., Cleveland, Ohio).

A&O61-3664 (CW6092) - Grease

Texaco Unitemp (Texas Co.)

A&O61-3778 - Lubricant - Microfine Molykote

A&O61-3834 - Oil - Lubriplate No. 1 Oil

EK110882 - Fluid

DC No. 200 - 100,000 centistokes (Dow Corning)

NOTE: Lubrication is normally required only when projector is serviced, periodic lubrication is not necessary. For details refer to installation instruction in the section for the particular part or assembly.

4. SPECIAL TOOLS & TEST FILM

No. 260 - Spring Tension Scale
No. 1007 - Claw Depth Gauge
No. 1034 - Power Supply
No. 760079 - SMPTE "JIFFY" Test Film
No. 760382 - 6 foot loop - SMPTE 5,000 Cycle Sound Focusing Test Film
No. 760383 - SMPTE Buzz Track Test Film
No. 760386 - 6 foot loop - SMPTE 400 Cycle Signal Level Test Film
No. 761715 - 25 feet SMPTE Registration Test Film

5. HOW TO

5.1 MECHANISM

5.1.1 Remove

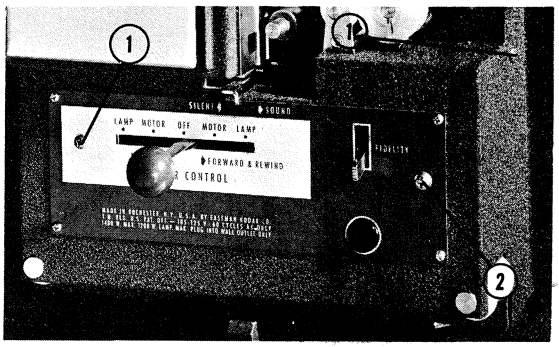

a) Two screws (1), screw and spacer (2), control knob (setscrew), than take off exciter lamp cover.
b) Cord compartment baffle (2 screws).
c) Meohanism support bracket located beneath the baffle (2 screws in case back). - (continued)

5.1.1 Remove Mechanism (continued)

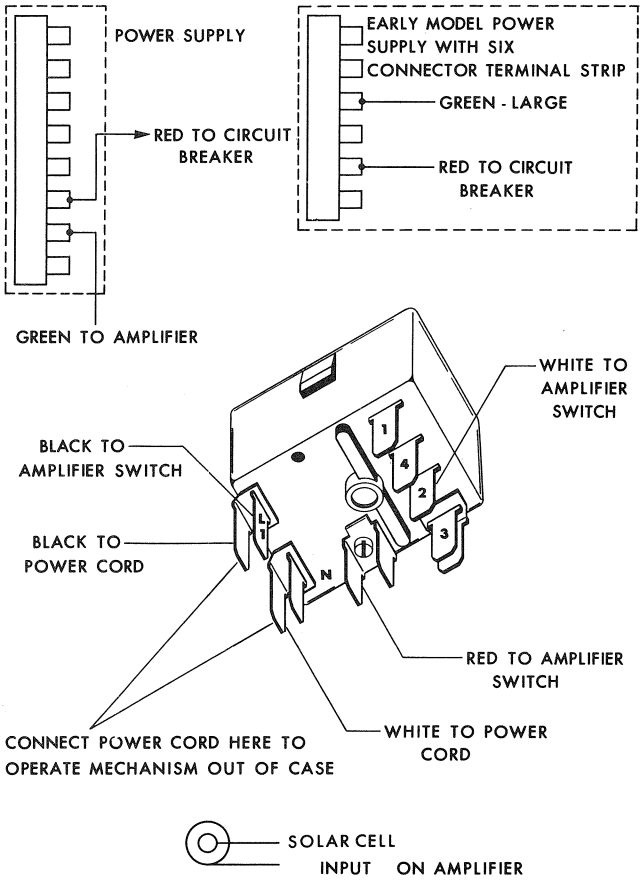

d) Leads shown in drawing.
e) Screw on bottom of case.

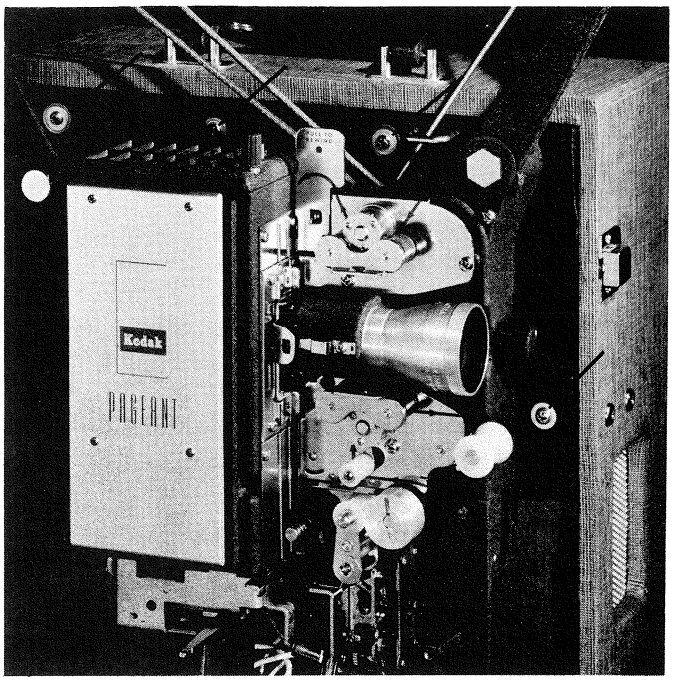

f) Four screws (arrows) and lift mechanism out of case.
g) Support post, to stand mechanism upright.

5.1.2 Install

Mechanism in reverse order of removal. Lubricate the film guide roller shafts on the exciter lamp cover with EK1150 Oil as required.

5.2 AMPLIFIER

5.2.1 Remove

a) Exciter lamp cover and cord compartment baffle, (Section 5.1.1).
b) Solar cell plug from jack.

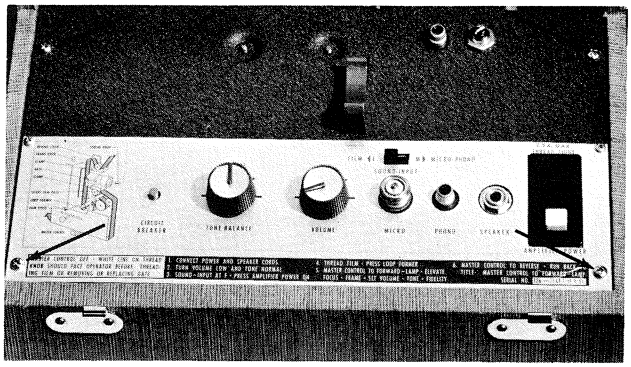

c) Four amplifier mounting screws (arrows).
d) Amplifier from case - manipulate wires as needed.

NOTE: Amplifier can now be operated and tested.

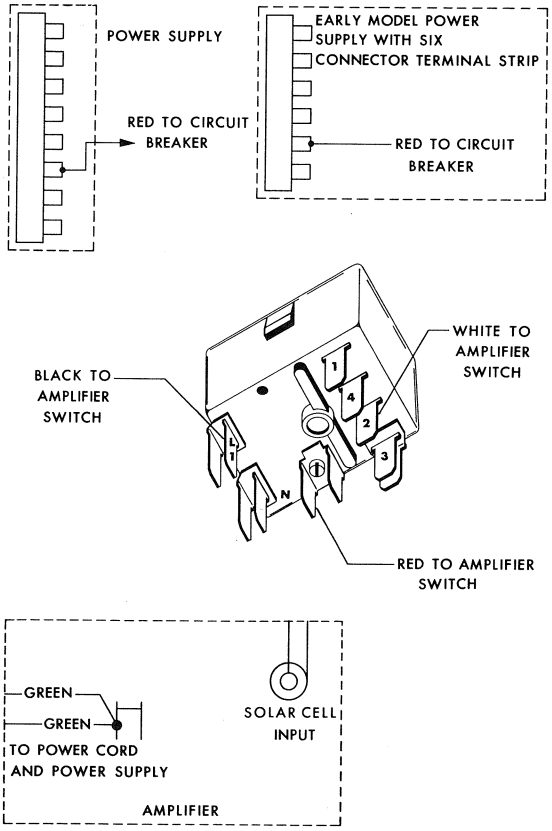

e) Leads shown in drawing to completely remove amplifier from case.

5.2.2 Install - amplifier in reverse order of removal.

5.3 APERTURE PLATE AND PRESSURE PAD ASSEMBLY

5.3.1 Remove

a) Pressure pad.
b) Aperture plate (2 screws).

5.3.2 Adjust

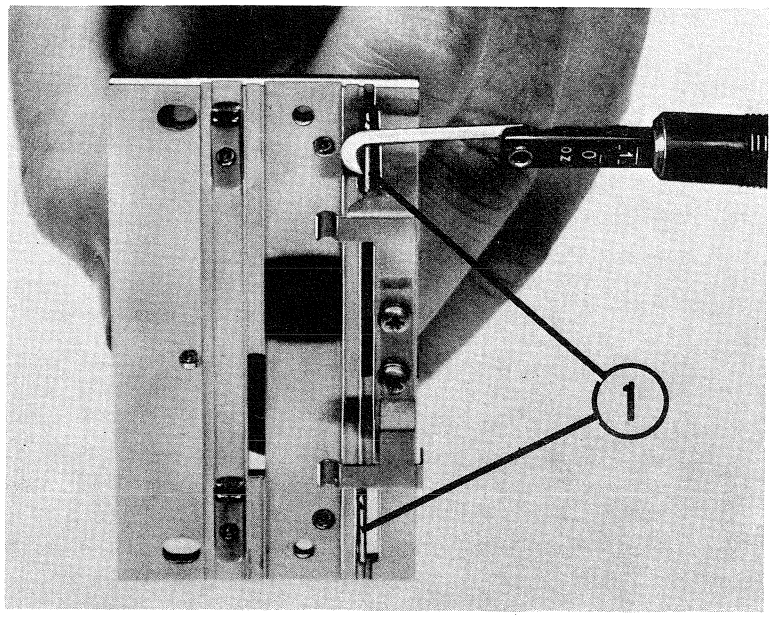

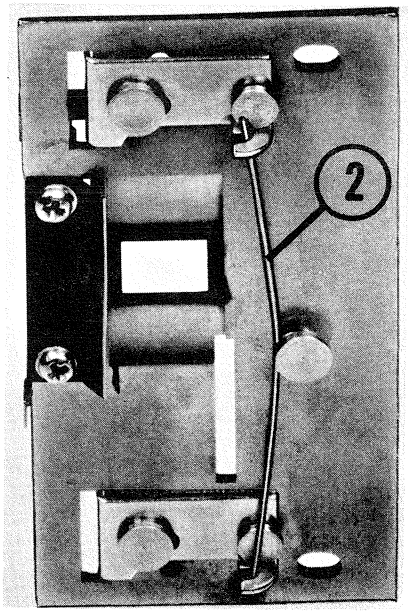

a) Pressure of movable side guides (1) between 1 and 1½ ounces by bending spring (2).

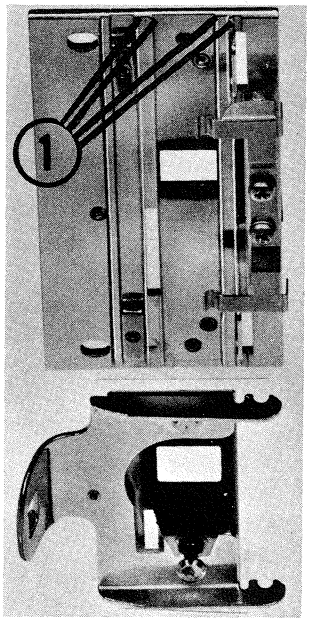

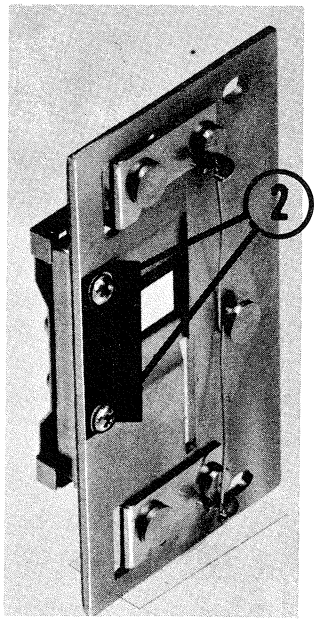

b) Pressure pad rails to align with aperture plate rails (1); if necessary, loosen screws (2) to re-position pressure pad.

5.3.3 Install - parts in reverse order of removal.

5.3.4 Adjust

a) Clearance of pull-down claw in aperture plate slot as follows:

Place a strip of film in the gate. Turn the threading knob and observe the claw action with the framing knob turned to the extreme clockwise position and then to the extreme counterclockwise position. If either claw point strikes either side of the film perforations or the claw slot, loosen the two aperture plate screws and re-position the plate.

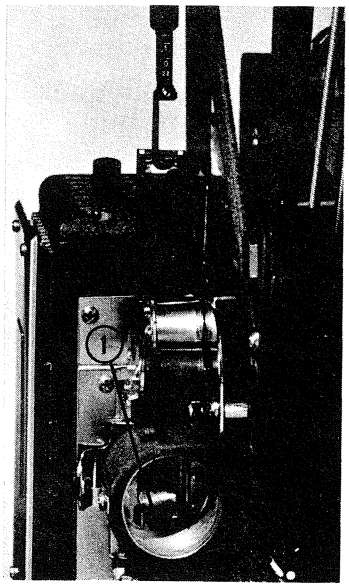

b) Pull-through tension (between 1½ and 2½ ounces) with claw retracted, using a strip of processed black-and-white film in the gate. Turn screw (1) clockwise to increase and counterclockwise to decrease. Apply a small amount of air-drying cement to the screw.

5.4 SPROCKETS

5.4.1 Remove

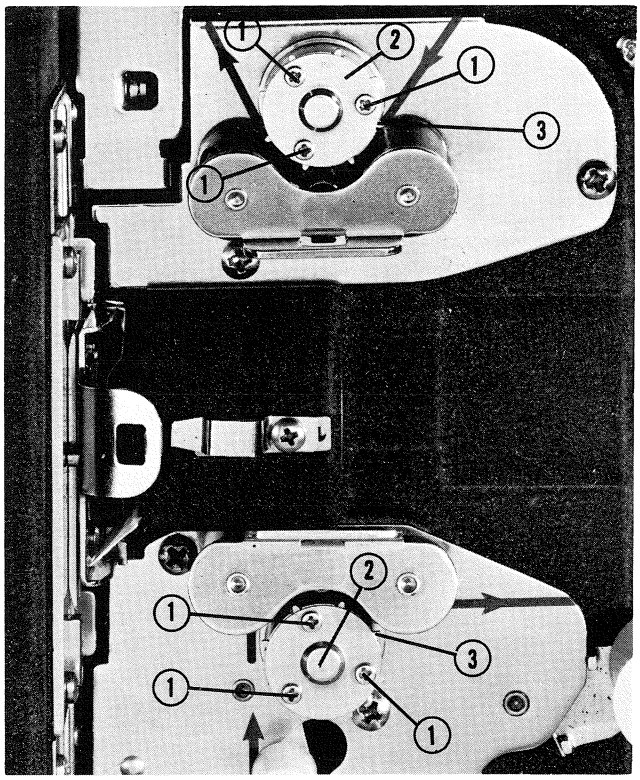

End plate screws (1), end plate (2), and sprocket (3), note spring behind upper sprocket.

5.4.2 Install (lubricate outside diameter of upper sprocket drive collar with A&O61-3834 Oil).

a) Spring in upper hub with point of spring in the hole of the collar then rotate hub clockwise to the stop and hold in this position

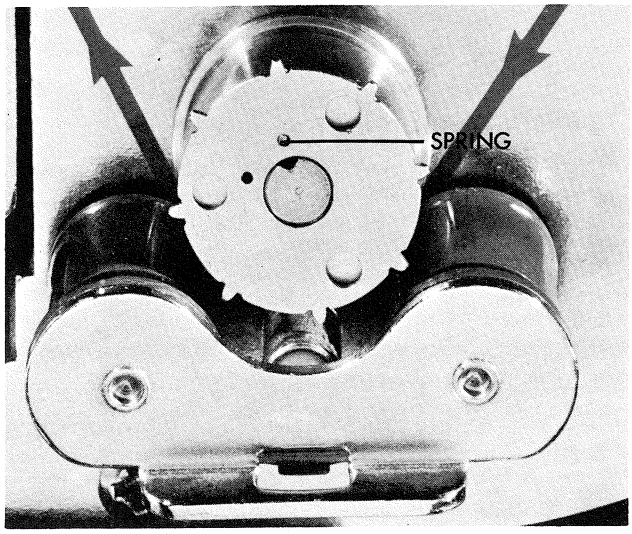

b) Upper sprocket in the hub with the end of the spring engaging hole in sprocket, then rotate sprocket counterclockwise to align screw holes.
c) End plate and screws - end plate should be centered for appearance.
d) Lower sprocket, end plate and screws.

5.5 UPPER SPROCKET HUB

5.5.1 Remove

a) Upper sprocket and spring (Section 5.4.1).

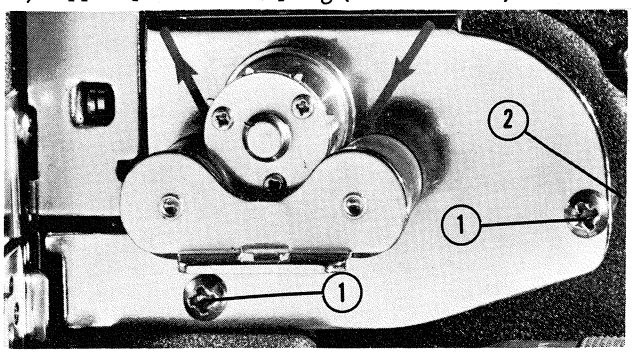

b) The two upper sprocket plate retaining screws (1) and the spacer (2), then lift off the assembly.

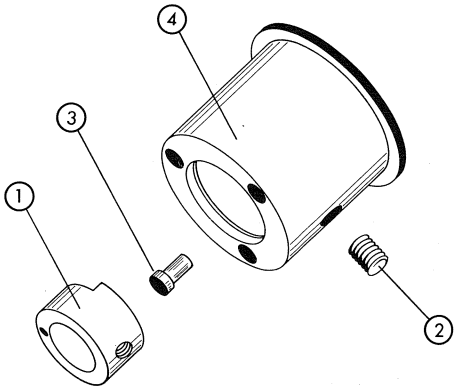

c) Collar (1) (by removing setscrew (2) through hub) stud (3) and hub (4).

NOTE: It may be necessary to drive the shaft out in order to remove the collar (1) and hub (4).

5.5.2 Install

a) Hub on shaft, then the stud and collar in the hub so that the cut-out of collar is over the stud.
b) Setscrew in collar and tighten setscrew on cut-out of shaft; no end play.
c) Upper sprocket plate assembly on projector. Be sure belt is in place. Hold assembly firmly in a downward position while installing spacer and screw to insure that take-up belt is properly engaged.
d) Sprocket and spring (Section 5.4.2).

5.6 LOWER SPROCKET HUB

5.6.1 Remove

a) Mechanism from case (Section 5.1.1).
b) Lower sprocket (Section 5.4.1).
c) Hub by removing setscrew and shaft.

5.6.2 Install

a) Hub on shaft and tighten setscrew on cutout of shaft; no end play.
b) Lower sprocket (Section 5.4.2).
c) Mechanism in case (Section 5.1.2).

5.7 UPPER SPROCKET CLAMP

5.7.1 Remove

a) Upper sprocket clamp (Section 5.5.1.b).

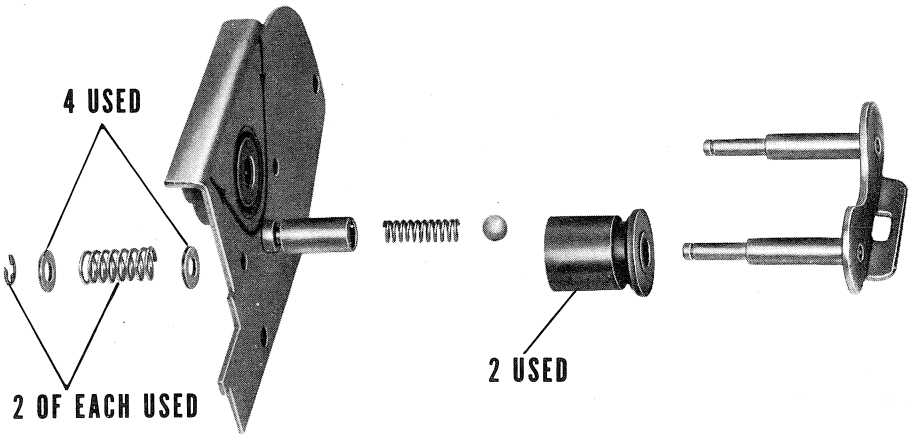

b) Sprocket clamp parts as required.

5.7.2 Install parts in reverse order of removal. Lubricate the sprocket guard stop pin ball with EK1150 Oil; the roller shafts with A&O61-3664 Grease and the sprocket shaft with A&O61-3834 Oil.

5.7.3 Adjust sprocket clamp, using two and three thicknesses of film. With clamp closed, rollers should turn freely with two thicknesses of film, but should be snug with three. Carefully bend post on plate to accomplish this.

5.8 LOWER SPROCKET CLAMP

5.8.1 Remove

a) Lower sprocket hub (Section 5.6.1).
b) Lower sprocket plate assembly (2 screws).

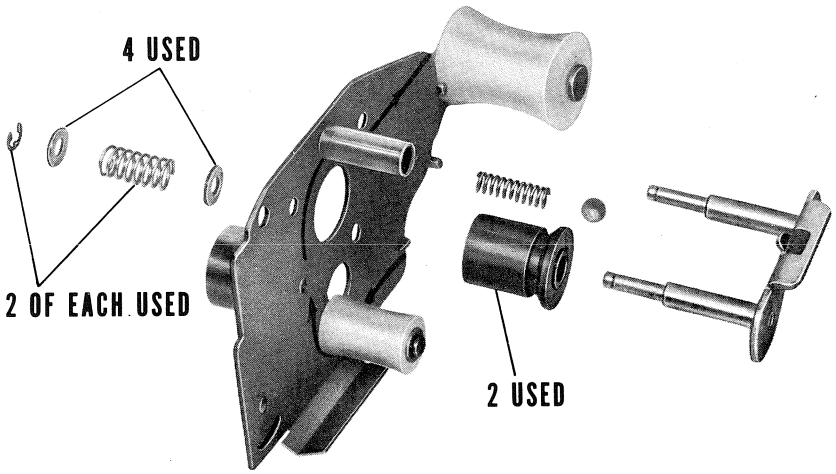

c) Sprocket clamp assembly parts as required.

5.8.2 Install parts in reverse order of removal - (Section 5.6.2 for hub installation). Lubricate as follows:

a) Sprocket guard stop ball and idler roller shaft with EK1150 Oil.
b) Sprocket roller shafts and idler arm pivot pin with A&O61-3664 Grease.

5.8.3 Adjust

Sprocket clamp using two and three thicknesses of film. With clamp closed, rollers should turn freely with two thicknesses of film, but should be snug with three. Loosen screws and move plate assembly to make this adjustment.

5.9 DAMPER ROLLER ARM AND SPRING

5.9.1 Remove

a) Lower sprocket clamp (Section 5.8.1).

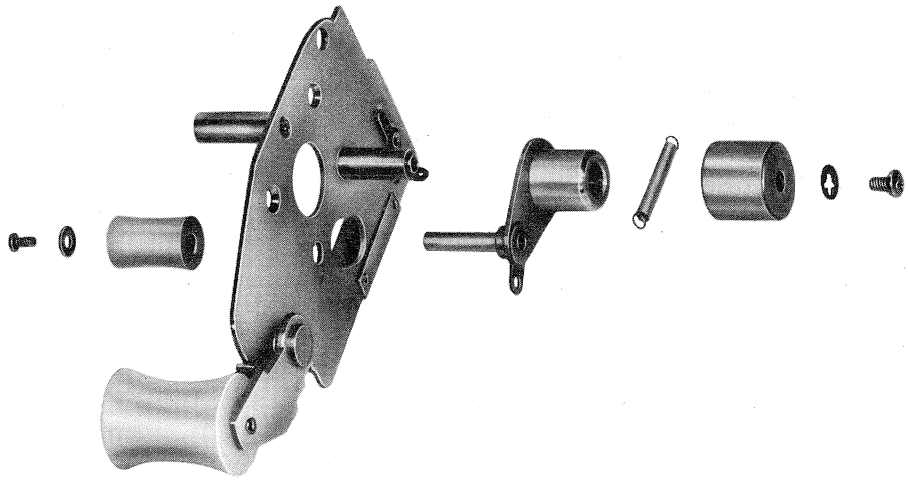

b) Damper roller parts as required.

5.9.2 Install (lubricate roller shaft and bearing with EK1150 Oil, and use EK110882 Fluid as required in bearing cup.)

a) Parts in reverse order of removal - adjustment (Section 5.9.3a) can be made at this point.

b) Lower sprocket clamp on projector (Section 5.8.2) and adjust clamp (Section 5.8.3).

5.9.3 Adjust

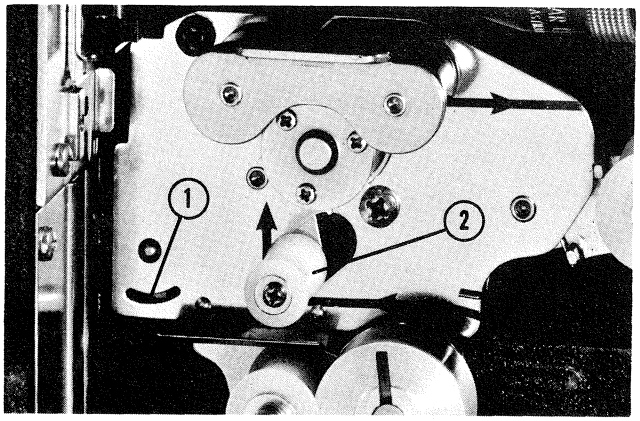

a) Tension on damping roller arm, using a small blade screwdriver or scriber through slot (1) to move spring lever. When the damping roller (2) is in the relaxed position, there should be no tension on the damping roller spring.

b) Damping roller arm as follows:

Remove the damping roller retaining screw. Thread the projector for sound, using processed film; turn on the motor and observe the action of the damping roller. A correctly adjusted roller arm will cause the damping roller to work its way off the shaft slowly when the projector is running forward and cause it to work its way on the shaft slowly (toward the sprocket plate) when the projector is running in reverse. If the roller motion is rapid in either direction, it indicates that the roller arm is bent too much and should be straightened till the IN and OUT movement of the roller is slow. Do not bend the roller arm in the direction "C-D"; bend as indicated by "A-B". Replace the damping roller retaining screw.

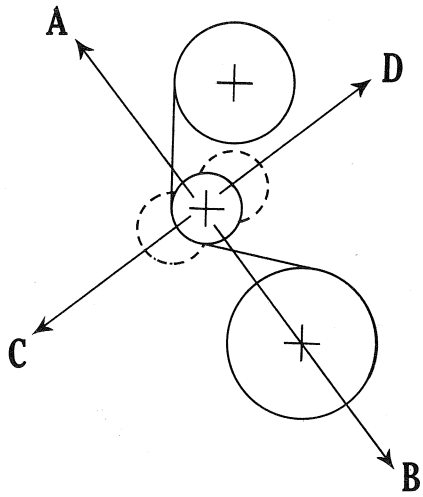

5.10 EXCITER LAMP BRACKET

5.10.1 Remove

a) Mechanism from case (Section 5.1.1).
b) Sound optics by unhooking the mount spring from the bracket assembly.

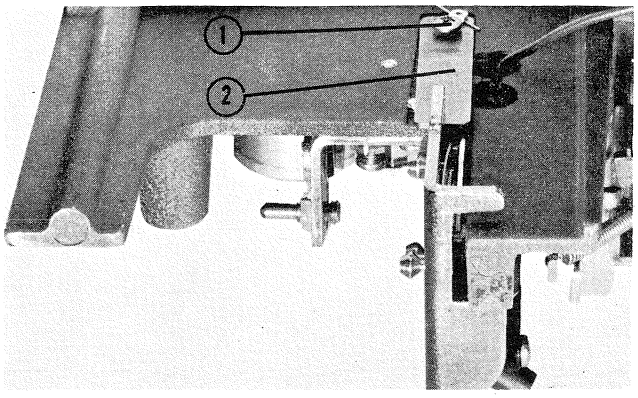

c) The exciter lamp wire (blue) from the power supply terminal strip. Loosen the sound optics bracket spring screw (1) and move the bracket spring (2) to the side far enough to allow removal of the bracket.

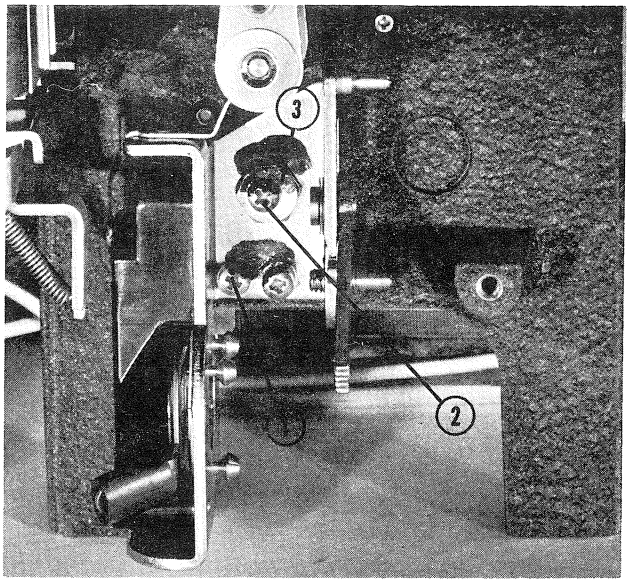

d) Bracket by removing clamp screw (1), eccentric screw (2) and eccentric (3).

5.10.2 Install parts in reverse order of removal.

5.10.3 Adjust centering of scanning beam - see sound system "Optics and Related Area" (Section 5.30.1).

5.11 CHAIN

5.11.1 Remove

a) Mechanism from case (Section 5.1.1).
b) Reverse take-up clutch actuator (1).
c) Chain after loosening screw (2) and moving tension adjustment stud (3) to allow sufficient slack in chain to bring it over the sprocket teeth.

5.11.2 Install parts in reverse order of removal. To install a new chain, carefully open a link, place chain on sprockets, close link and replace adjustment stud (3) if previously removed. Lubricate the chain, tension adjusting stud, and reverse take-up clutch bushing (4) with EK1150 Oil.

5.11.3 Adjust

Tension adjustment stud (3) so that there is a slight amount of slack in the chain. Too tight an adjustment will result in "wows" in the sound; too loose a chain will allow it to strike the pivot shaft (5) when the projector is elevated, causing static in the sound.

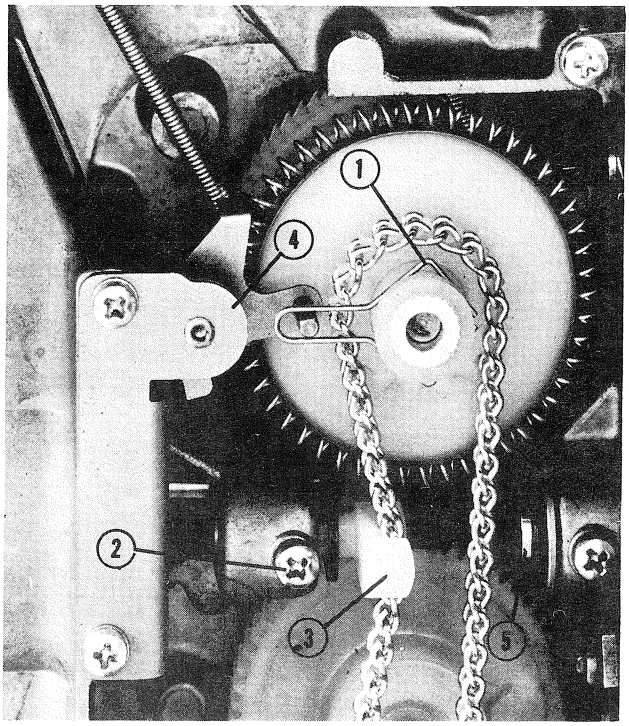

5.12 PLANETARY GEAR ASSEMBLY AND REWIND MECHANISM

5.12.1 Remove

a) Chain (Section 5.11.1).

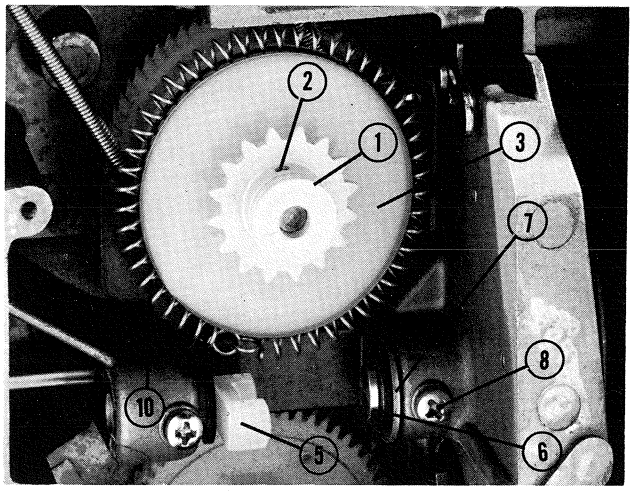

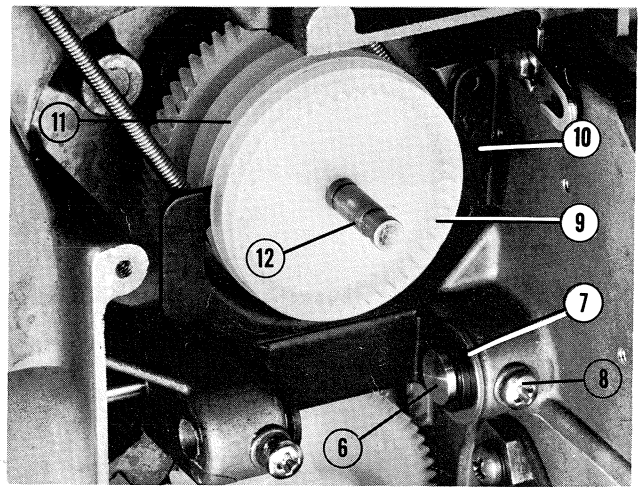

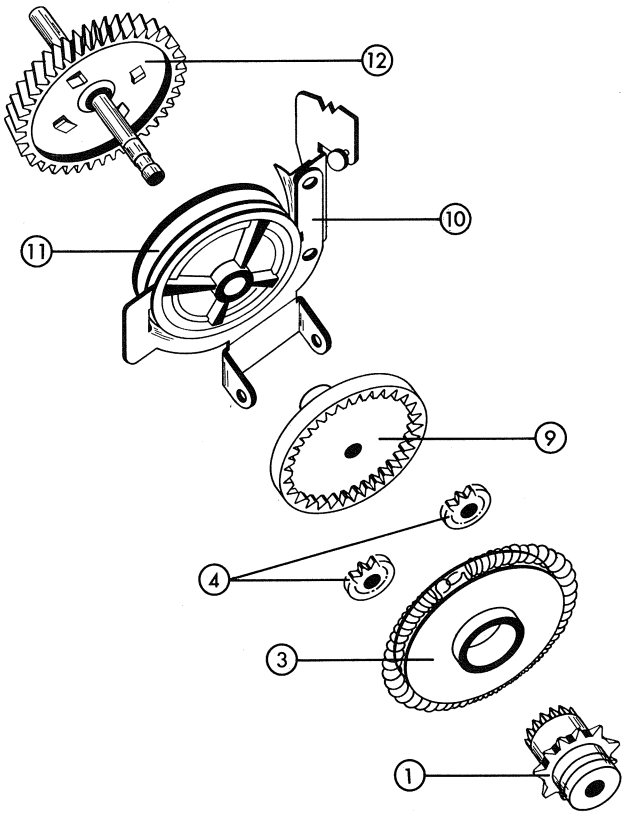

b) Sun gear (1) by loosening setscrew (2), then spider (3) and planetary gears (4).
c) Adjustment stud (5).
d) Shift plate shaft (6) and spacing washer (7) by loosening screw (8).
e) Reverse mechanism gear (9), shift plate (10) and pulley (11).
f) Sprocket shaft and gear assembly (12), if necessary, by removing sprocket hub (Section 5.5.1).

5.12.2 Install parts in reverse order of removal; lubricate as follows:

a) All gear teeth, and actuator groove on the sun gear (1) with EK1150 Oil.
b) Upper sprocket drive shaft with A&O61-3834 Oil.
c) Rewind shaft lever detent spring and shift plate pivot with A&O61-3619 Lubricant.
d) Tension clutch groove on spider (3) with A&O10-592 Lubricant.

5.12.3 Adjust

Clearance between sun gear and sprocket (1) and the reversing mechanism internal gear (9); this should be established by setting the sun gear and sprocket tightly against the internal gear and then backing the gear off the shaft .015" to .020".

NOTE: Adjust chain (Section 5.11.3) and sprocket clamp (if previously removed Section 5.7.3).

5.13 LOWER SPROCKET GEAR

5.13.1 Remove

a) Chain (Section 5.11.1).
b) Lower sprocket hub (Section 5.6.1).
c) Lower sprocket gear and shaft.

5.13.2 Install parts in reverse order of removal. Lubricate gear teeth with EK1150 Oil.

5.14 SOUND DRUM AND SPROCKET & PAWL ASSEMBLY

5.14.1 Remove

a) Flywheel and spacer behind flywheel - (Section 5.15.1).

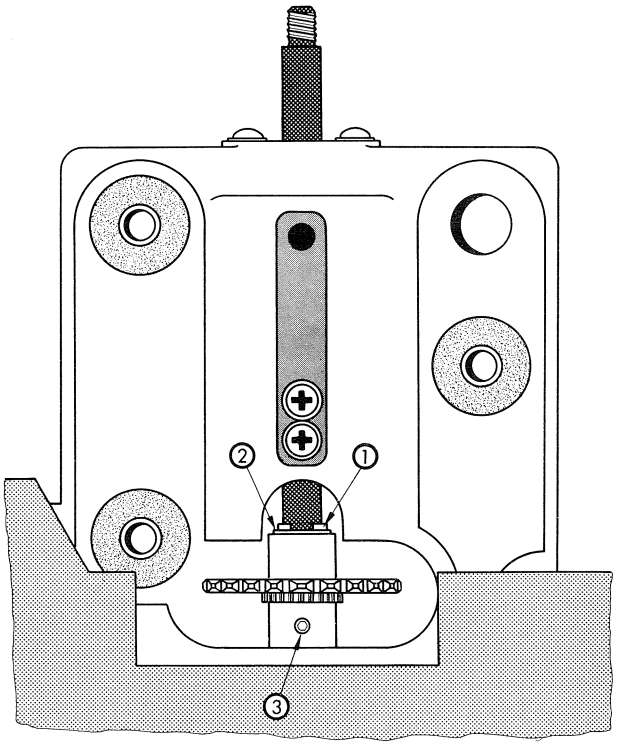

b) Retaining ring (1), note washer (2) between the ring and the sprocket.
c) Sound drum shaft by:

1. Loosening setscrew (3) in ratchet.
2. Holding back on pressure roller while shaft is withdrawn to the second retaining ring.
3. Removing second retaining ring and withdrawing shaft.

5.14.2 Install parts in reverse order of removal. Lubricate the shaft, pawl, and ratchet with EK1150 Oil. Make necessary adjustments to chain (Section 5.11.3) and flywheel (Section 5.15.3).

5.15 FLYWHEEL

5.15.1 Remove

a) Mechanism from case (Section 5.1.1).

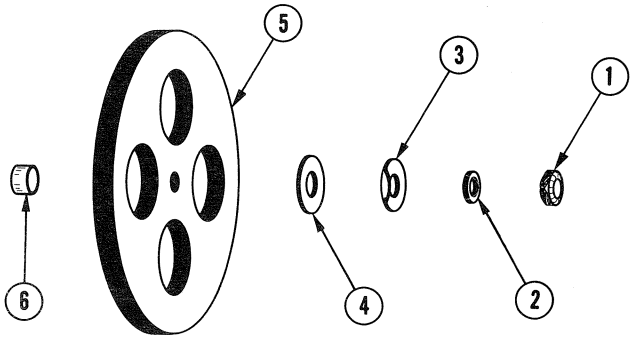

b) Flywheel nut (1), (left hand thread), spacer washer (2), spring washer (3) and phenolic washer (4).
c) Flywheel (5) and spacer (6).

5.15.2 Install (lubricate the shaft at the flywheel with A&O61-3619 Lubricant).

a) Spacer (6) and flywheel (5).
b) Phenolic washer (4).
c) Spring washer (3), concave side next to flywheel, spacer washer (2) and nut (1),(left hand thread).

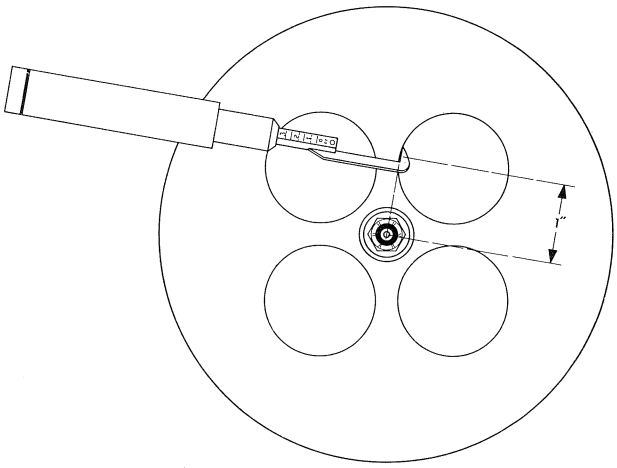

5.15.3 Adjust

Flywheel slipping torque; between 3 and 4 ½ ounce inches. Check by hooking a pull-type spring scale in one of the holes in the flywheel. Keep the axis of the scale at a right angle to a radial line from the center of the flywheel to the point of the contact of the spring scale. Hold the sound drum firmly to prevent shaft from turning and note the tension required to start the flywheel rotating. A correctly adjusted flywheel will require between 3 and 4½ ounces of tension when the torque is measured in this way.

5.16 PRESSURE ROLLER ASSEMBLY

5.16.1 Remove

a) Sound drum (Section 5.14.1).
b) Pressure roller (1) by pushing back on the equalizing link (2) and removing the shaft (3). See illustration of rear view of assembly showing relative position of arm, link, and spring (4).
c) Arm assembly (5) by turning the hexagon spacer (6) counterclockwise.

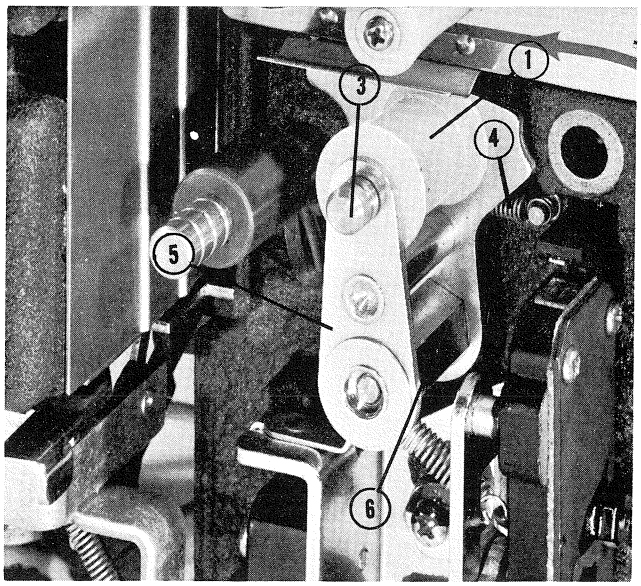

5.16.2 Install

a) Arm assembly and pressure roller. Apply a light film of A&O61-3664 Grease to the roller shaft and the pivot.
b) Sound drum shaft (temporarily).

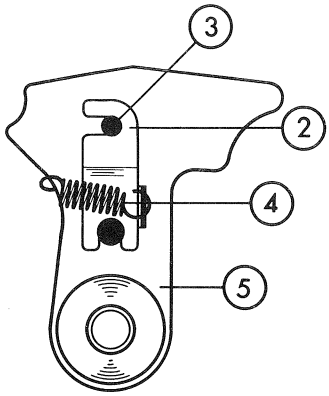

5.16.3 Adjust

Pressure of roller against sound drum, if necessary. The pressure should be 12 to 18 ounces. If too great, stretch spring (4) on equalizing link.

5.16.4 Install

Sound drum shaft, ratchet, sprocket and pawl, and balance of parts in reverse order of removal. Apply a light film of EK1150 Oil to sound drum shaft, ratchet and pawl. Make necessary adjustments to chain (Section 5.11.3) and to flywheel (Section 5.15.3).

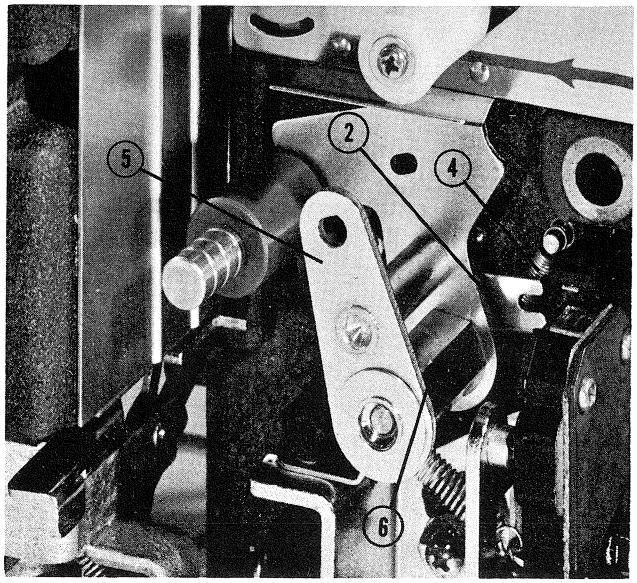

5.16.5 Adjust

Position of pressure roller, using buzz track test film, (Section 5.30.1 b).

5.17 SHUTTER DRIVE BELT

The belt shifting rollers and belt damping systems vary on these projectors and since the new belt requires a different shutter drive pulley and no damping it is necessary to modify the older style projectors. This modification, as well as the parts required, varies depending upon the style used in the projector.

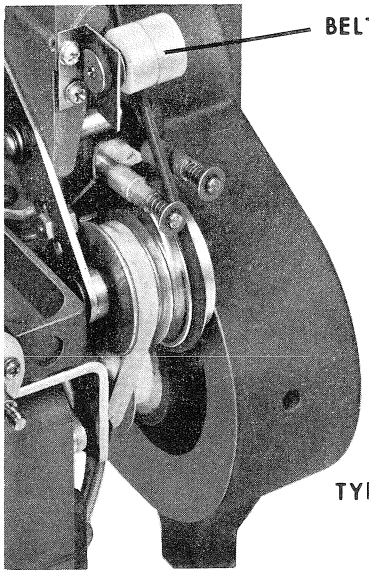

TYPE I REQUIRES
KIT #K-1655

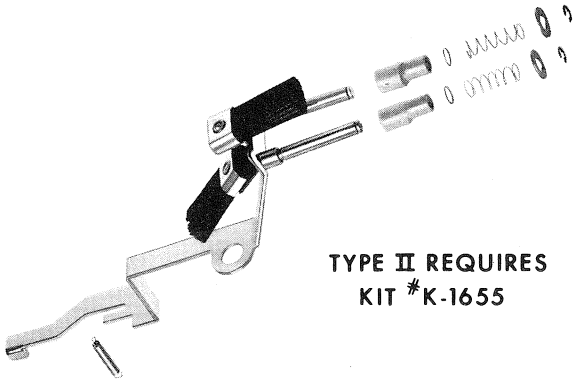

TYPE II REQUIRES
KIT #K-1655

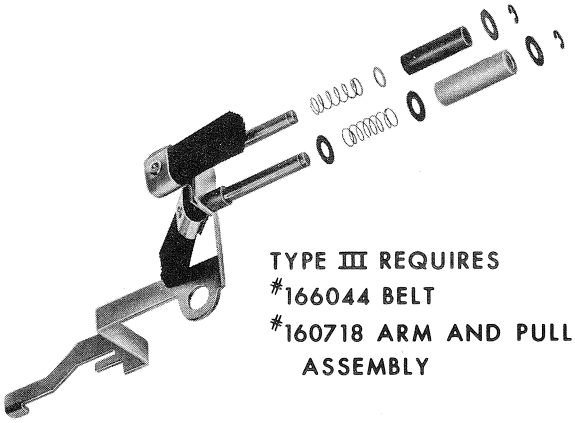

TYPE III REQUIRES
#166044 BELT
#160718 ARM AND PULLEY ASSEMBLY

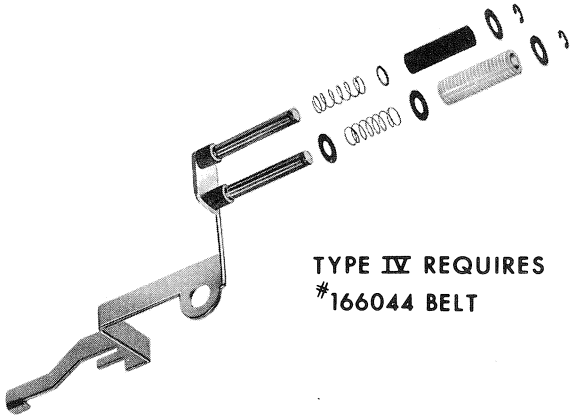

TYPE IV REQUIRES
#166044 BELT

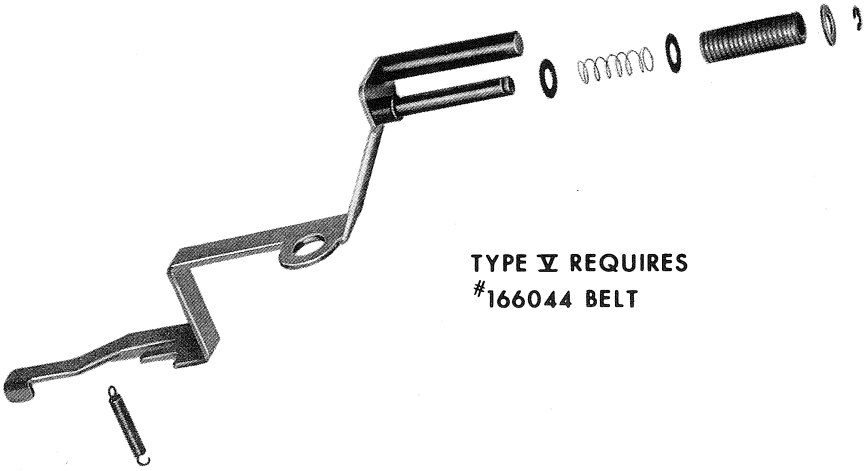

TYPE V REQUIRES
#166044 BELT

(continued)

5.17 SHUTTER DRIVE BELT (Continued)

5.17.1 Remove

a) Mechanism from case (Section 5.1.1).
b) Lamphouse cover and projection lamp.

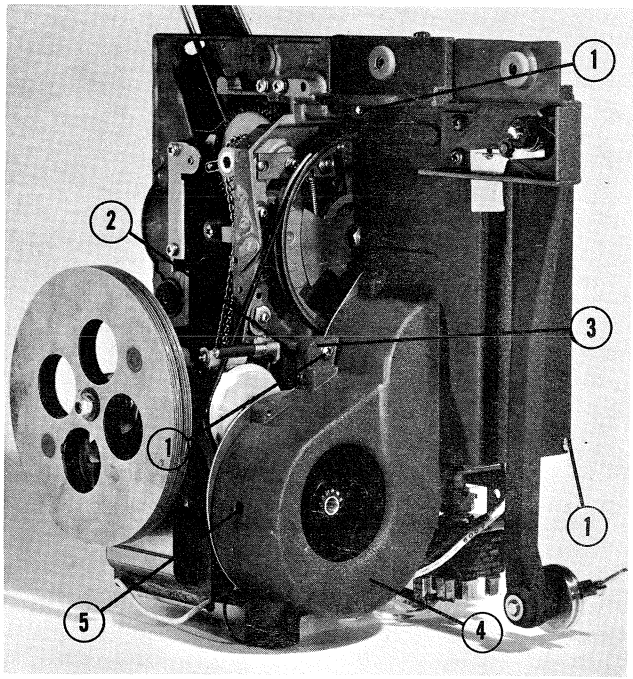

c) Three fan housing screws (1), the spacer (2), and lockwasher. (Power supply has been removed for illustration only).
d) Fan housing (4) and fan by loosening fan setscrew through access hole (5).

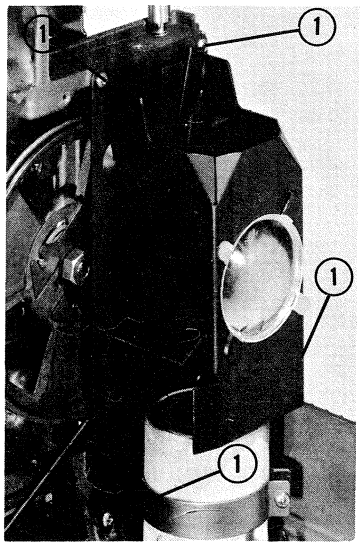

e) Lamp chimney by removing the four screws (1).
f) Drive belt.

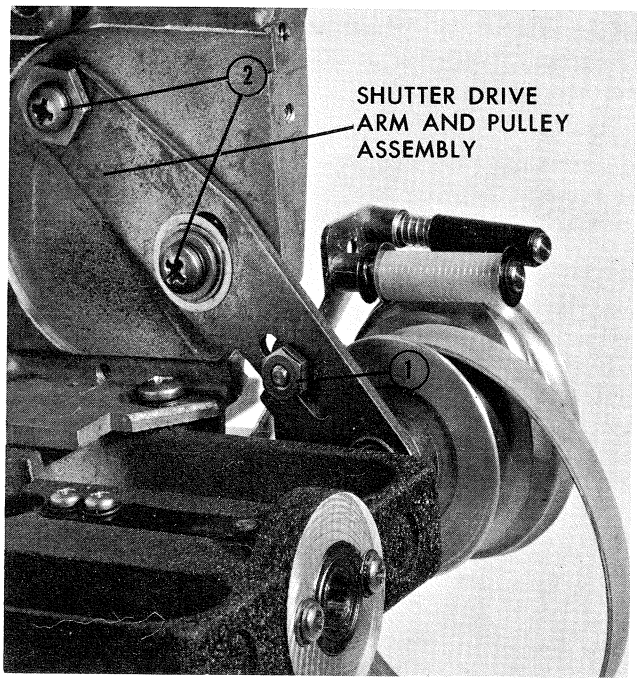

g) Type I

1. Remove and discard the shutter drive arm and pulley assembly by disconnecting the link (1) and removing the two mounting screws (2).
2. Remove and discard the two eccentric belt shifting rollers.
3. Remove and discard the two belt damping rollers. One located on the fan housing cover plate, the other on the mechanism casting.

h) Type II

1. Remove and discard the shutter drive arm and pulley assembly by disconnecting the link (1) and removing the two mounting screws (2).
2. Remove and discard the two eccentric belt shifting rollers.
3. Remove and discard the two belt damping brushes. Some of the brushes are held on with screws; others are riveted and will have to be broken off without damaging the roller shafts.

i) Type III

1. Remove and discard the shutter drive arm and pulley assembly by disconnecting the link (1) and removing the two mounting screws (2).
2. Remove and discard the two belt damping brushes. Some of the brushes are held on with screws, others are riveted and will have to be broken off without damaging the roller shafts.

j) Types IV and V

No further disassembly necessary.

KIT #K-1655 SHUTTER DRIVE BELT AND SHIFTING ROLLER KIT

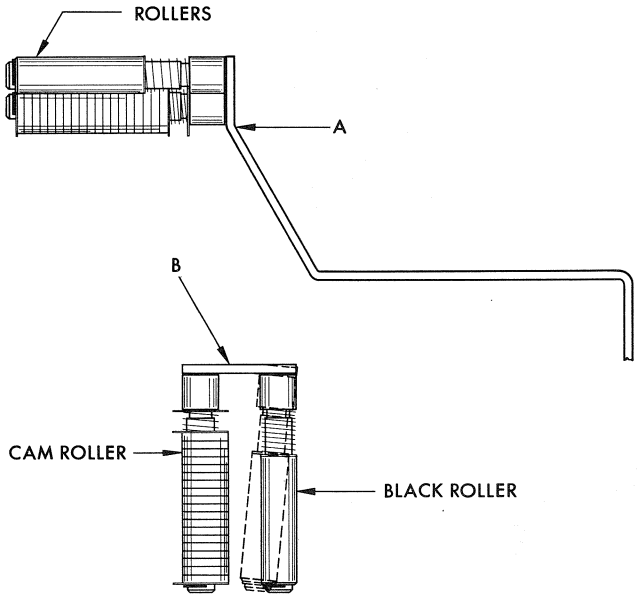

USE WITH STRAIGHT ROLLER 126200

USE WITH ECCENTRIC ROLLER 153360

5.17.2 Install

a) Types I, II, and III - new shutter drive arm and pulley assembly #160718.
b) Types I and II - new rollers #153360 and #126200. (Extra springs and washers provided in Kit #K-1655, in case of loss or damage while removing original parts). Note coil direction of springs.
c) All Types - new shutter drive belt.

5.17.3 Adjust speed shifting, Types I, II, and III as follows:

a) Bend bracket down at "A" so that rollers just clear pulley.
b) With shifting lever in sound speed and belt on high side of pulley, bend bracket at "B" so that black roller barely clears the belt.
c) With shifting lever in silent position and belt on low side of pulley, bend bracket at "B" so that eccentric roller clears belt by .010"-.020" when high side of eccentric is away from belt.
d) When adjusted correctly, shifting can be accomplished while rotating the mechanism by hand.
e) Types IV and V should normally require no adjustments, but if required, follow the above procedure.

5.17.4 Install

Balance of parts to projector and fit into the case.

5.18 PULL DOWN MECHANISM

5.18.1 Remove

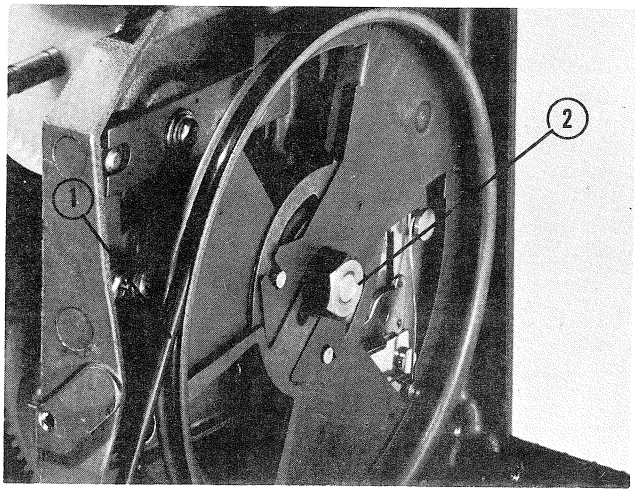

a) Drive belt (1) (Section 5.17.1 a thru f), shutter shaft nut (2) (left hand thread), and washer.
b) Super-40 shutter - see Section 5.19 for detailed service information.

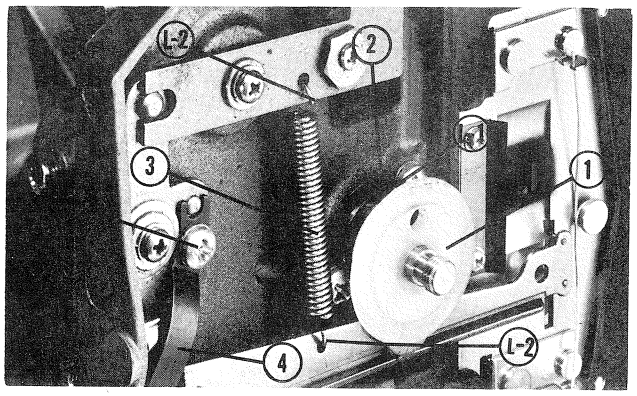

c) In-and-out cam (1), and up-and-down cam (2) - note shim washers behind the up-and-down cam.
d) Claw return spring (3).
e) Retaining spring (4) by removing screw (5).

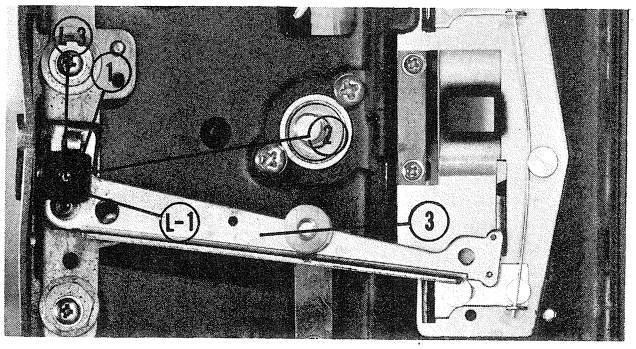

f) Pad (1), ball (2), and pull-down claw (3).

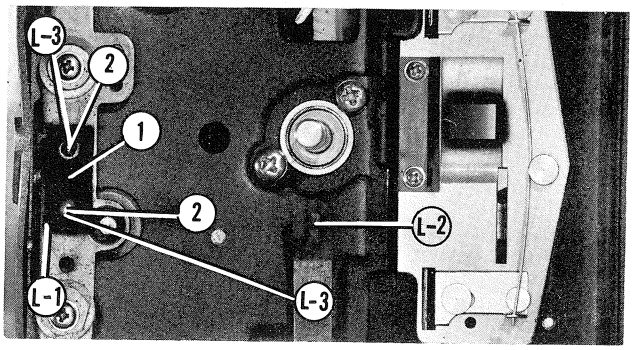

g) Pad (1), balls (2).

5.18.2 Install

a) Pull-down parts in reverse order of removal, applying lubricants as follows (see preceding illustrations):

L-1 EK1150 Oil - moisten both pads - light film on surface of up-and-down cam.

L-2 A&O61-3655 Grease - contact points of return spring with framing lever and claw assembly. Little on in-and-out spring, where small button on claw assembly bears against the spring.

L-3 A&O61-3619 Lubricant - small amount on three pivot balls and in ball recesses.

b) Super-40 shutter temporarily. Make sure that timing lug of shutter is in the aligned holes of the cam. (See Section 5.19 for detailed service information on Super-40 Shutter).

5.18.3 Adjust

a) Claw clearance (Section 5.3.4a).
b) Claw protrusion. The top claw should extend through the film perforation, but not so far that it strikes the frame of the pressure pad assembly on the pull-down stroke or touches the film on the return stroke. (Factory adjustment is .030" - .045" beyond aperture plate rails.) Correct, if necessary, by changing the total thickness of claw shim washers.

5.18.4 Install

a) Super-40 shutter finally. The fixed blade of the shutter should be away from the aperture when the line on the threading knob is towards the operator. (See Section 5.19 for detailed service information on Super-40 Shutter).
b) Balance of components in reverse order of removal.

5.19 SUPER-40 SHUTTER

5.19.1 Remove

Super-40 shutter from projector -(Section 5.18.1 a thru c). Shutter can now be disassembled as required.

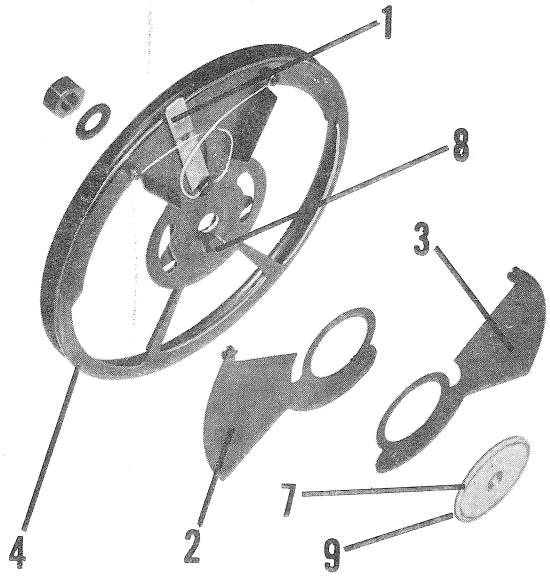

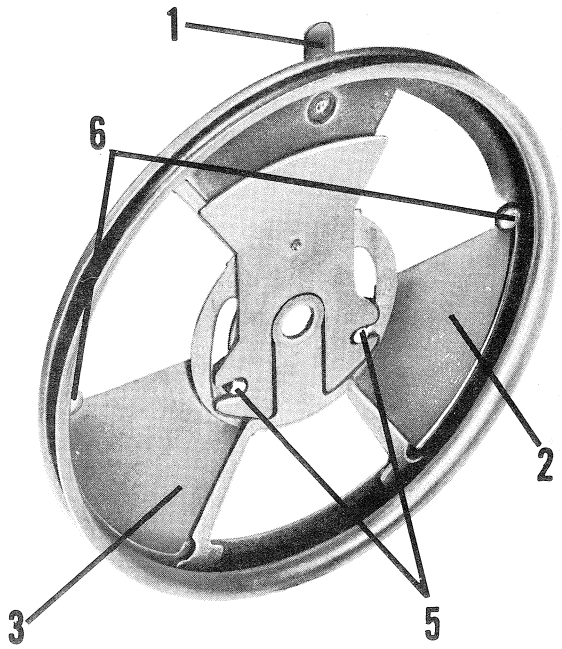

5.19.2 Install as follows:

a) Place the locking lever (1) in the lock position and assemble the inner (2) and outer (3) blades to the shutter frame (4). The inner blade can be identified by the small bumps around the center.

b) Make sure that the actuating studs (5) and stop studs (6) are positioned as shown. Assemble the cam (7) to the shutter, with the timing lug (8) engaging the timing hole (9).

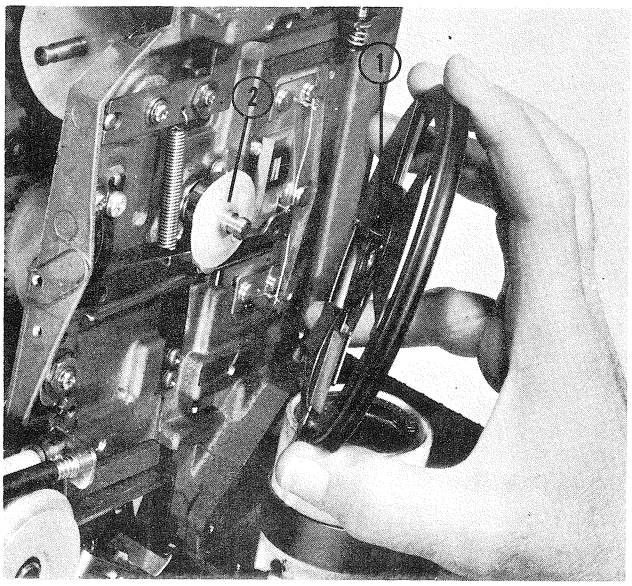

c) Rotate the cam to position the timing hole at the top. Tilt the mechanism slightly back and holding the assembled shutter as shown, sneak up on the shutter shaft, making sure that the timing lug (1) of the shutter engages the timing holes (2) of the cams. Replace the washer and shutter shaft nut (left hand thread). Do not tighten the nut.

d) Move the lever to the unlocked position and manually check the shutter blades for freedom of movement. If there is any binding, recheck for proper assembly of the various parts. If shutter action is satisfactory, proceed with final orientation.

e) Final orientation - remove the threading knob. The flat side of the shutter shaft should face away from the lens holder casting when the shutter timing lug is toward the aperture. If it is not, hold the shutter to keep it from moving and turn the shutter shaft until the flat side of the shaft is correctly positioned. Hold the shaft with a suitable wrench and tighten the shutter nut (left hand thread).

f) Recheck the shutter blades for freedom of movement. Replace the threading knob.

g) Lubricate weight and blades with small amount of A&O61-3778 Lubricant as required.

5.20 SHUTTER SHAFT AND BALL BEARING

5.20.1 Remove

a) Planetary gear assembly (Section 5.12.1 a thru e).
b) Pull-down parts (Section 5.18.1 a thru d).
c) Shim washers

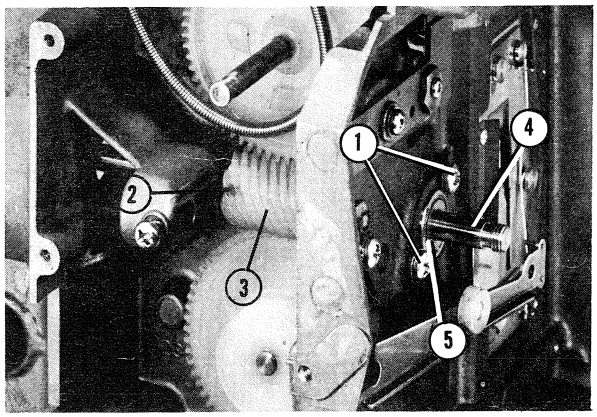

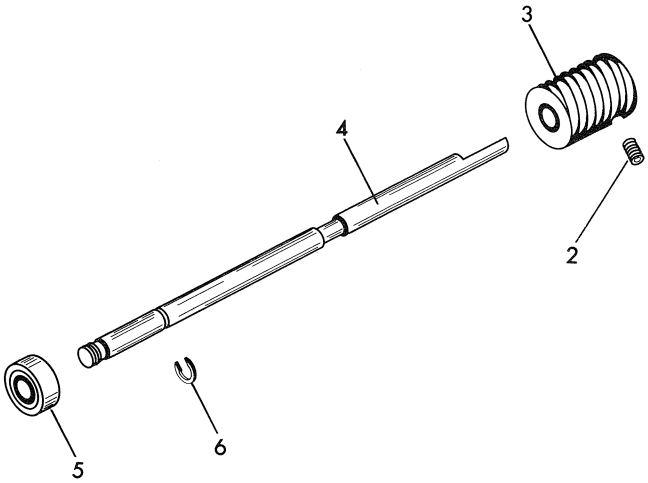

d) Ball bearing retaining screws and lockwashers (1). Loosen 2 setscrews (2) 180 degrees apart, in worm (3).
e) Shutter shaft (4) and ball bearing (5) by pulling shaft from pull-down side. (Exploded view shows worm, shutter, shaft, retaining ring (6), and ball bearing).

5.20.2 Install

Parts in reverse order of removal, making sure that worm is centered (see also Section 5.18.2 and 5.18.4). Make necessary adjustments to planetary gear assembly (Section 5.12.3), and chain (Section 5.11.3).

5.21 CONTROL SWITCH

5.21.1 Remove

a) Exciter lamp cover (Section 5.1.1a).
b) All wire connections from switch.
c) Switch by loosening setscrew in cam, sliding cam up (out of mesh), loosening switch retaining nut, and sliding switch down and out.

5.21.2 Install

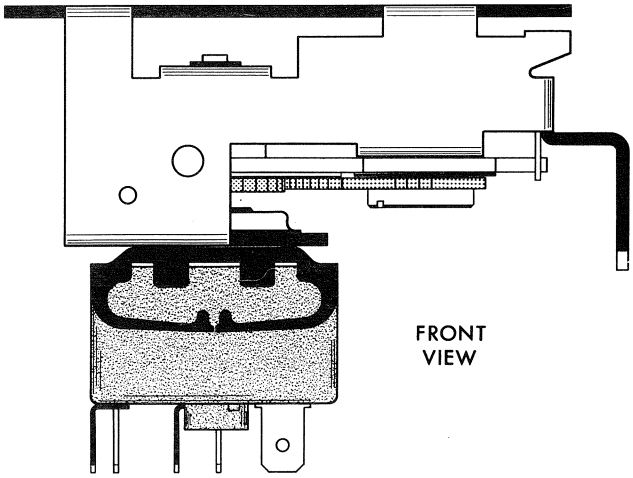

a) Switch and nut in bracket and tighten nut.

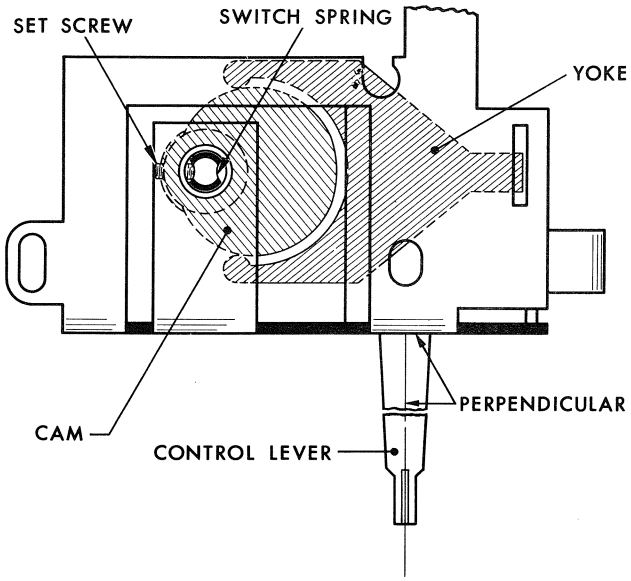

b) Cam in mesh with control lever so that conditions in drawing are met.
c) Switch connections (see Master Control Switch - page 30), and reassemble projector.
d) Lubricate following points with A&O61-3655 Grease:
   Teeth and cam of switch cam and pinion.
   Pivot area of projector control lever.
   Pivot area of projector switch cam yoke.
   Shifting arm stud.
   Contact points of interlock lever.

5.22 SPEED AND DIRECTION CONTROL MECHANISM

See Section 5.17 for illustrations of the various types of speed shifting lever assemblies.

5.22.1 Remove

a) Motor (Section 5.23).
b) Switch connections.

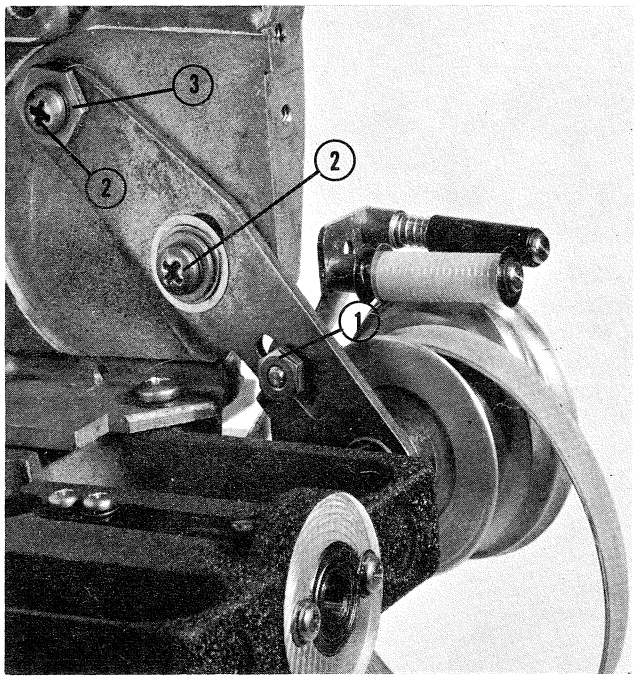

c) Stud holding pulley shifting lever to pulley arm by removing nut and lockwasher (1).
d) Pulley assembly by removing screws (2) and eccentric (3).

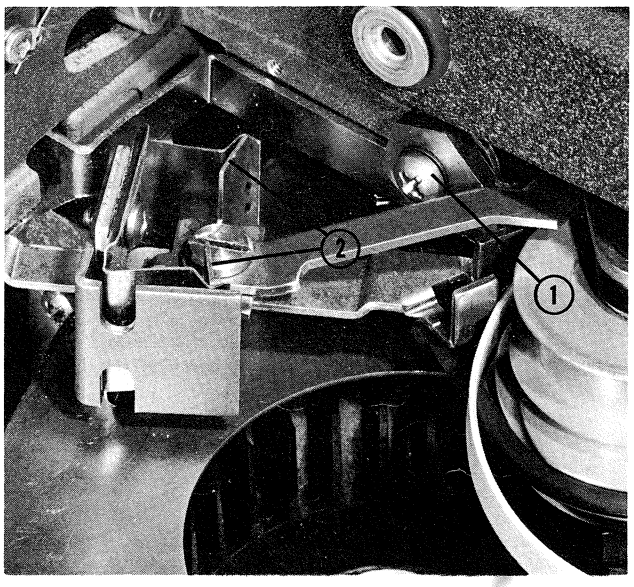

e) Belt shifting lever eccentric by removing screw and lockwasher (1).
f) Toggle levers (2).

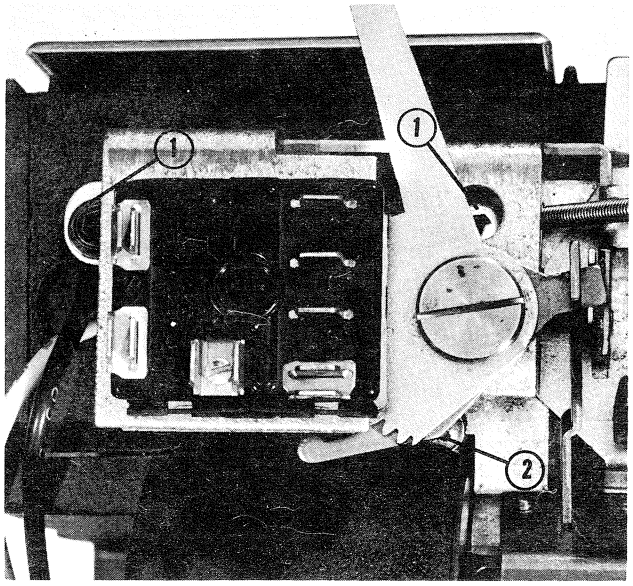

g) Two hex socket head cap screws (1) holding shifting assembly to casting.
h) Shifting assembly by loosening screw (2) and manipulating assembly.
i) Parts from assembly as required.

5.22.2 Install

a) Shifting assembly on projector.
b) Mounting screws (1) and (2) loosely.

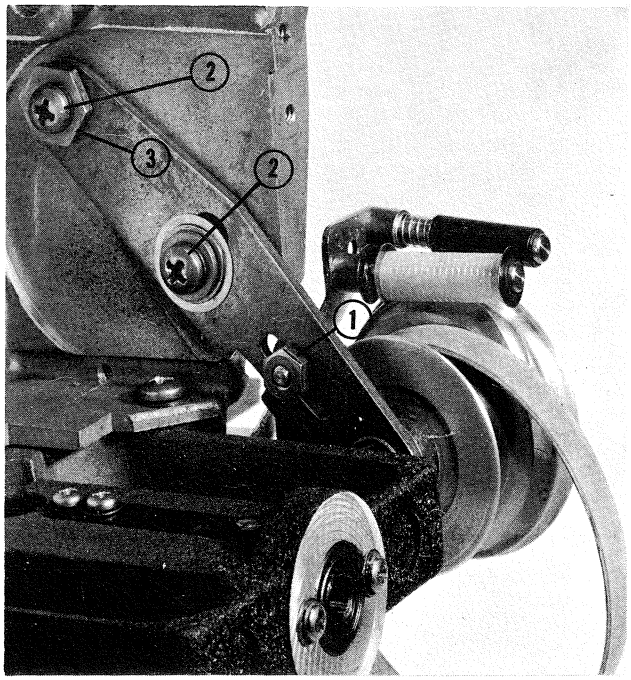

c) Pulley assembly eccentric and screws (2 & 3).
d) Stud holding pulley shifting lever to pulley arm, nut, and lockwasher (1). (continued)

5.22.2 Install (continued)

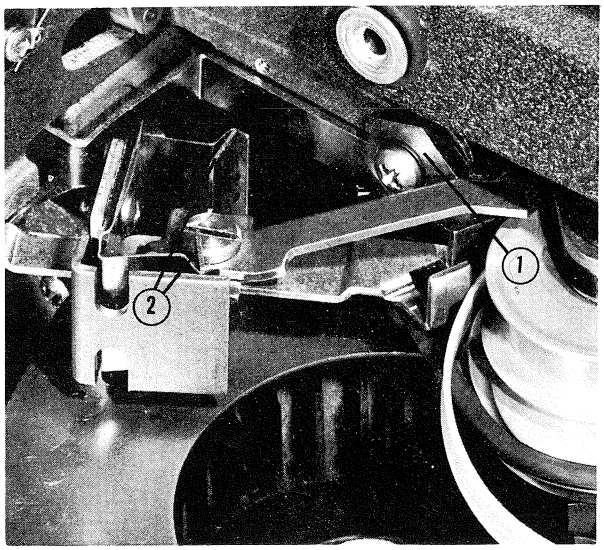

e) Belt shifting lever eccentric (1) (screw and lockwasher) and toggle levers (2).

5.22.3 Adjust speed shifting assembly by positioning the assembly and rotating lever eccentric so that:

a) Shifting can be accomplished only in the forward position of the control lever.
b) Drive belt does not touch either shifting roller in sound or silent speed.
c) Shifting rollers do not touch pulley.
d) Speed shifting can be accomplished while rotating mechanism by hand.

5.22.4 Install motor and switch connections.

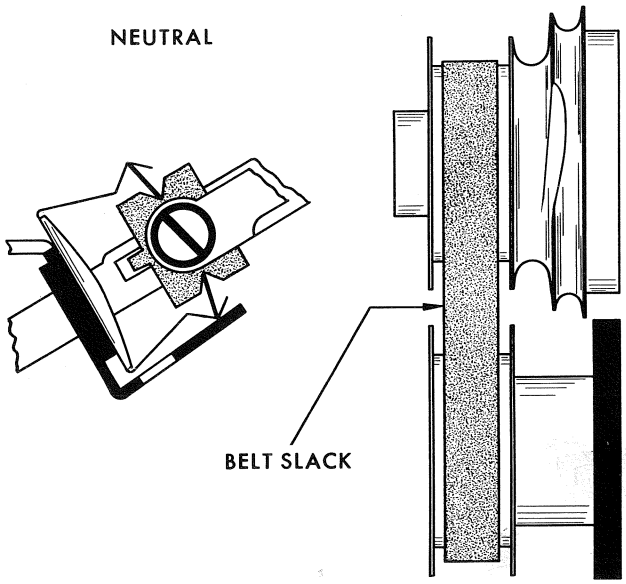

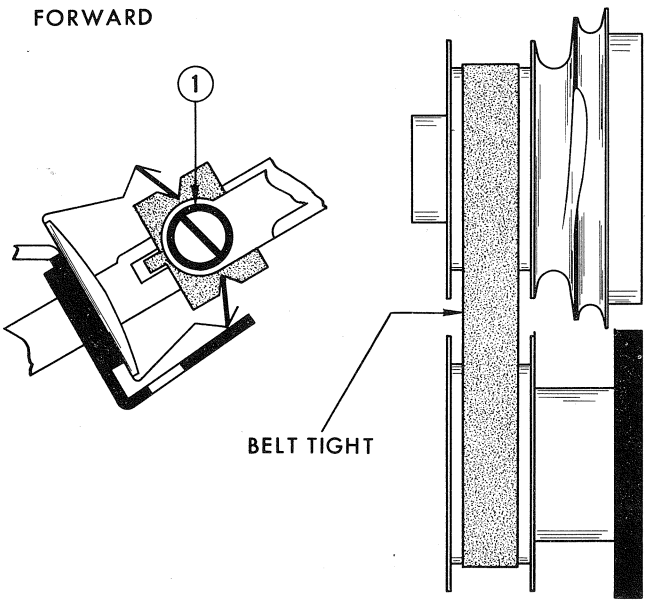

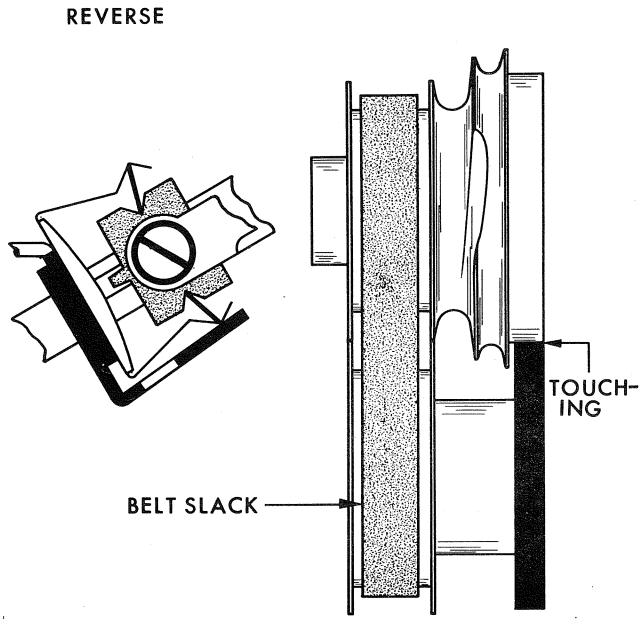

5.22.5 Adjust forward and reverse shifting by moving toggle lever (loosen screw (1)) and rotate drive pulley eccentric so that:

a) Belt drives mechanism in forward direction.
b) Rubber drive on motor pulley drives mechanism in reverse direction.
c) Drive belt is slack and rubber drive does not contact pulley in "OFF" position.
d) Above three conditions are met under any operating situation. Lubricate speed shifting rollers with A&O61-3778 Lubricant.

5.23 MOTOR

5.23.1 Remove

a) Mechanism from case (Section 5.1.1).
b) Motor by loosening setscrews in pulley and fan, and by removing three motor mounting screws. Note grounding spring on one of the screws.

5.23.2 Install parts in reverse order of removal - be sure setscrews are on flat of motor shaft and the pulleys are centered.

5.24 TAKE-UP ARM

5.24.1 Remove

a) Mechanism from case (Section 5.1.1).
b) Arm assembly by removing two screws holding it to the casting.
c) Parts as required, (see breakdown below).

5.24.2 Install parts in reverse order of removal. Lubricate the arm spindle, pivot, and release lever pivot with A&O61-3834 Oil.

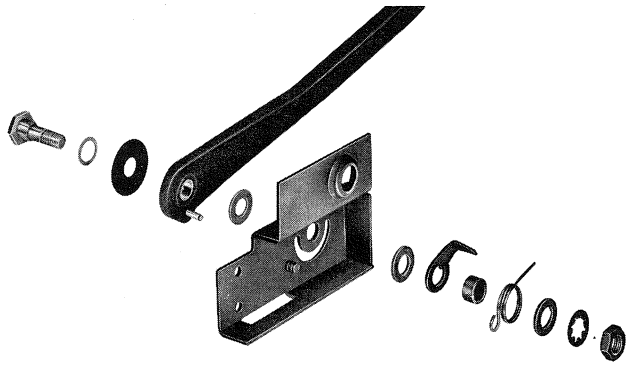

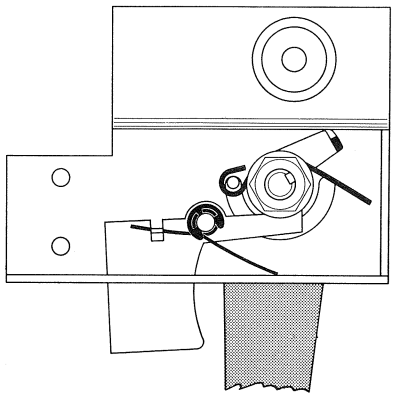

5.25 TAKE-UP SPINDLE

5.25.1 Install (see breakdown below).

Lubricate the following points with A&O61-3834 Oil:
Spindle pawl pivot.
Inside diameter of pulley ratchet.
Spindle.

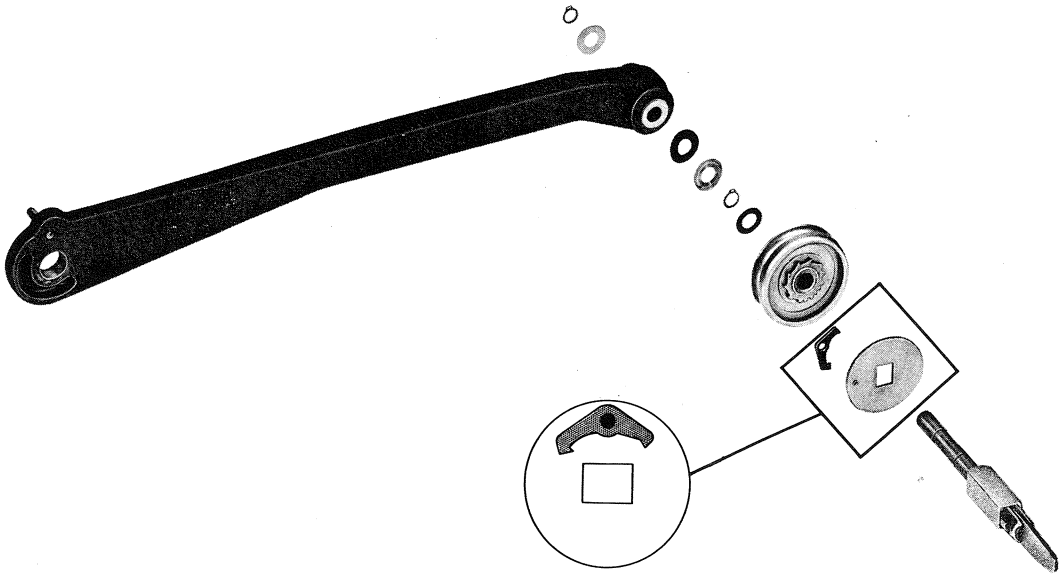

5.26 SUPPLY SPINDLE AND PULLEY

5.26.1 Remove

a) Belt from pulley.
b) Pulley from spindle by driving out pin.
c) Spindle by carefully withdrawing it from the arm.

NOTE: The spindle bearing of later model projectors is a steel bushing with ten loose bearing balls on each side of the bushing instead of a bronze sleeve bearing.

5.26.2 Install spindle and pulley in supply arm assembly with bronze sleeve bearing as follows:

a) Insert spindle assembly in bearing, then place pulley on shaft, hub toward bearing.
b) Insert .005-inch thickness gage between hub and bearing.
c) Clamp the pulley and spindle together and using the hole in one side of the hub as a guide, drill (1/16") through shaft and other side of the pulley hub.
d) Fasten pulley on shaft with the pin and remove gage.

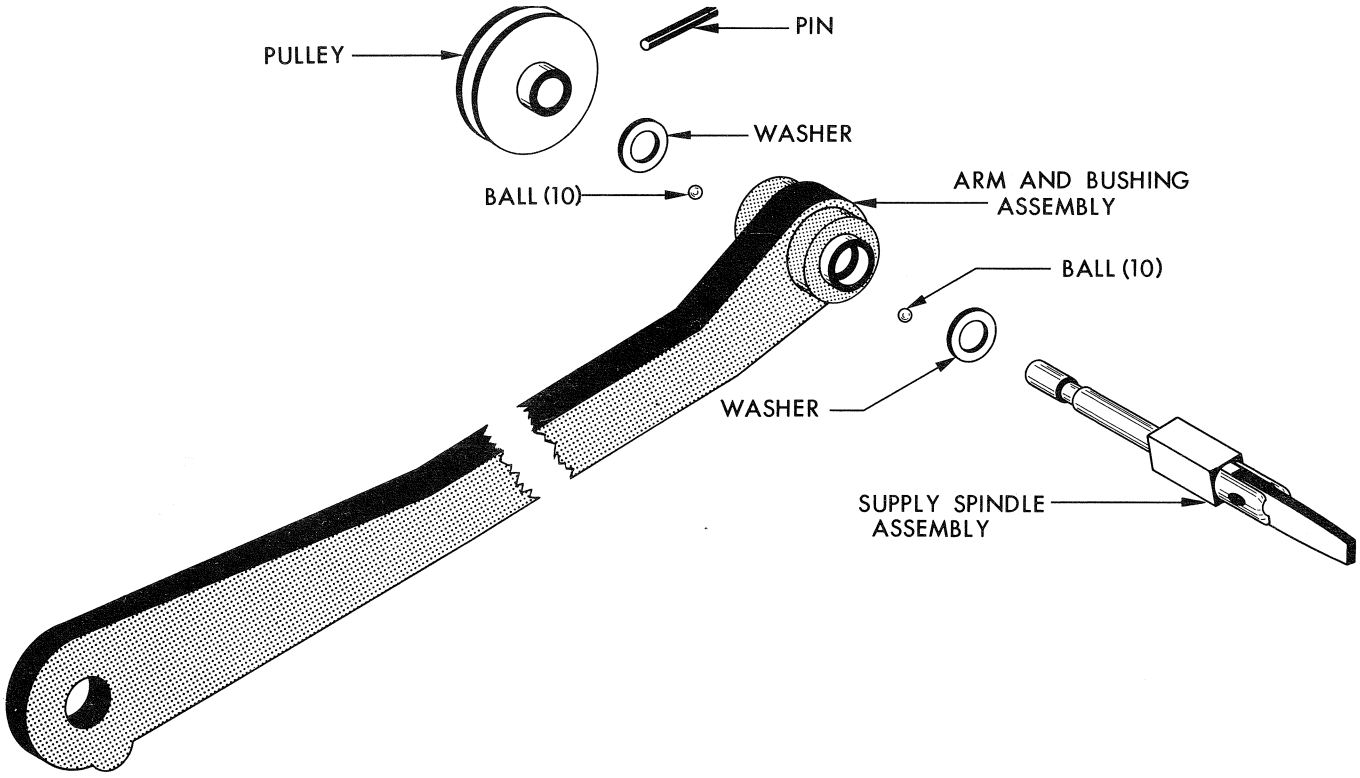

5.26.3 Install spindle and pulley in supply arm assembly with steel bushing and bearing balls as follows:

a) Using a small vise or similar means to hold the spindle assembly firmly in a vertical position, place washer on the shaft.
b) Apply a light coating of Grease A&O61-3655 to the upper surface of the washer and place ten bearing balls around the shaft; the grease will retain the balls in position.
c) Place the bushed end of the arm assembly over the end of the shaft - support the free end of the arm assembly with a block of wood of suitable height - and carefully lower the arm so that the bearing balls go into the recess.
d) Apply a small amount of grease to the upper recess and place ten bearing balls in position.
e) Add the other washer and place the pulley on the shaft, hub toward the washer.
f) Insert a .005-inch thickness gage between hub and washer.
g) Clamp the pulley and spindle together and using the hole in one side of the hub as a guide, drill (1/16") through the shaft and through the other side of the hub.
h) Fasten pulley on shaft with the pin and remove gage.

5.27 ELEVATING MECHANISM

5.27.1 Remove

a) Mechanism from case (Section 5.1.1).
b) Parts from mechanism as required.

5.27.2 Install

Parts in reverse order of removal so that knob is vertical when elevation is fully retracted. Lubricate the rack teeth, pinion teeth, and both sides of the bracket with A&O61-3619 Lubricant as required.

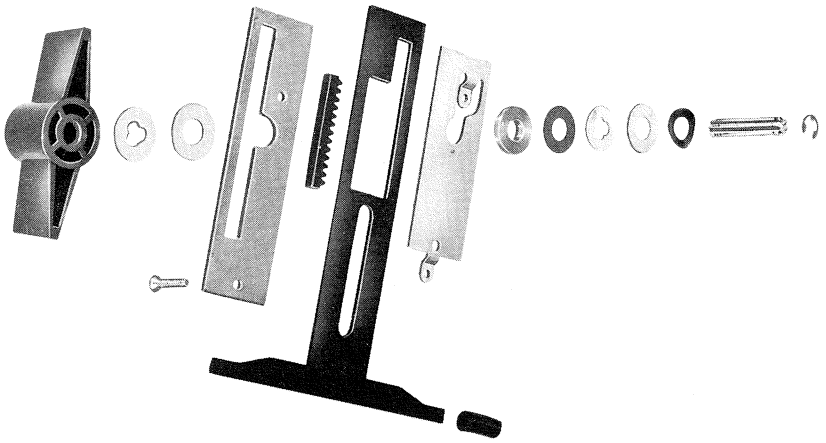

5.28 SOLAR CELL MOUNT AND CABLE ASSEMBLY

5.28.1 Remove

a) Sound optics by unhooking the mount spring from the exciter lamp bracket.
b) Mechanism from case (Section 5.1.1).
c) Flywheel (Section 5.15.1) and retaining rings from sound drum shaft so sound drum can be slide out far enough to remove the solar cell mount screw.

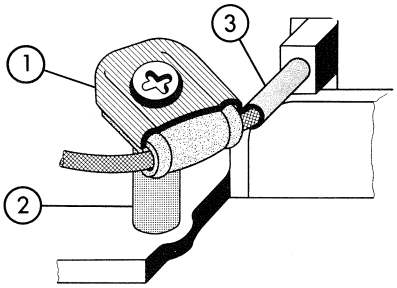

d) Screw holding the cable clamp (1) and standoff (2) in place and discard these parts, (later models do not use these parts).
e) Rubber sleeving (3) from cable and discard, then the cable plug by desoldering, and the mount and cable assembly.

5.28.2 Install

Parts in reverse order of removal. Do not use cable clamp (1), standoff (2), or rubber sleeve (3): late style cables are shorter and have a strain relief within the mount.

5.29 LAMP SOCKET

5.29.1 Adjust

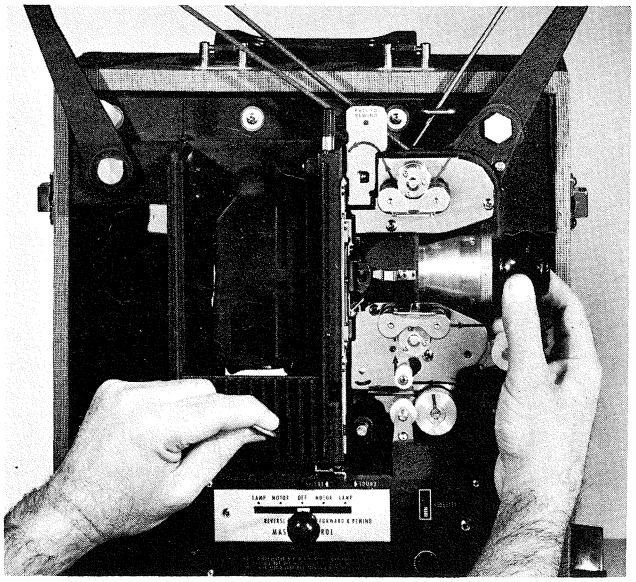

Lamp socket position by turning screw while observing projected filament image using a loupe in front of the lens; filament image should be centered.

5.30 SOUND SYSTEM (Optics and Related Area)

5.30.1 Adjust

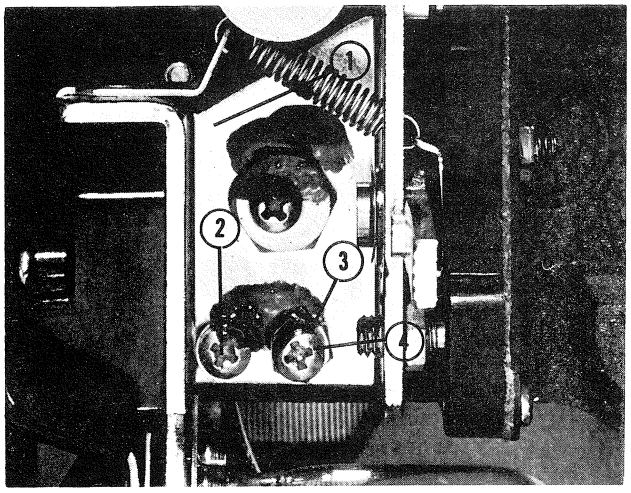

a) Sound optics bracket assembly (1) to center the scanning beam. Observe the beam in reference to the lower edge of sound drum and center of solar cell. The edge of the scanning beam should clear the rim of the sound drum by .012" and the light from the scanning beam should strike the solar cell in the center. Loosen lockscrew (2) and locknut (3), then turn adjusting screw (4) as needed. Tighten locknut (3) and apply a small amount of air-drying cement to screw and locknut.

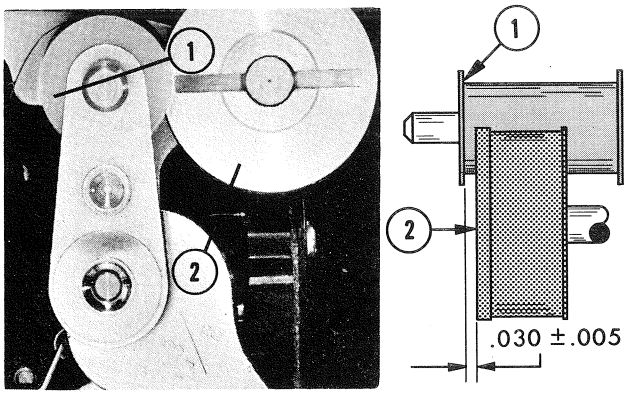

b) Position of pressure roller for proper overhang of sound track beyond the sound drum. The distance between the inner surface of flange (1) on pressure roller and the flat surface of the sound drum (2) should be .030" ± .005". Roller position must insure that inner raised surface of sound drum contacts the film only in area between picture and sound track. Use Buzz Track Test Film (760383) and turn hexagonal spacer to move pressure roller assembly in or out, as required, so that neither tone is heard or both tones can be heard at the same level.

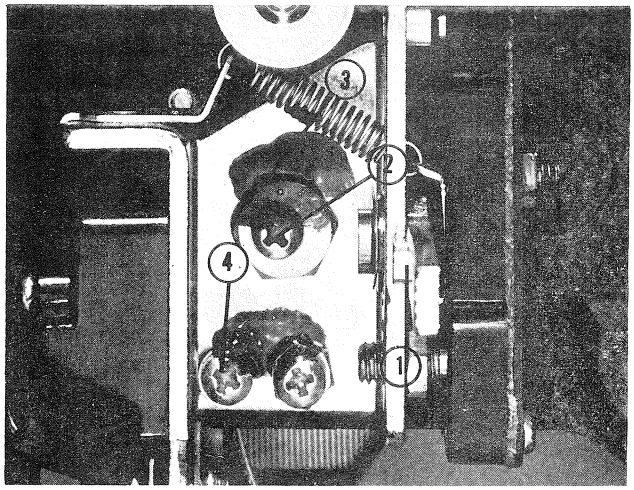

c) Sound optics bracket assembly to focus the sound optics using 5,000 cycle test film (760382). With the fidelity control lever (1) in the center of its travel, loosen the lock screw (2) and turn the eccentric (3) until the sound output is at maximum. Tighten lock screws (2 and 4) and apply a small amount of air-drying cement to them.

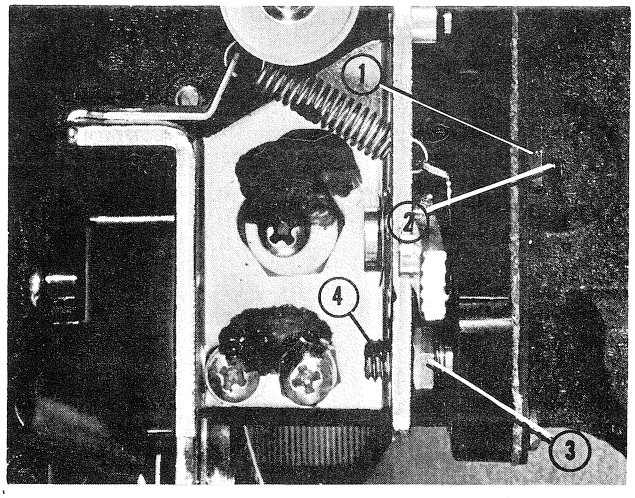

d) Sound optics for azimuth alignment and for minimum microphonics. Loosen lock nut (1) and turn screw (2) to adjust sound optics for maximum response, using 5,000 cycle test film (760382). Loosen lock nut (3), turn the volume up to maximum and, while tapping the sound head casting, turn screw (4) to adjust for minimum microphonics. Tighten lock nut (3) and apply a small amount of air-drying cement to screw and nut. Repeat azimuth adjustment. Tighten lock nut (1) and apply a small amount of air-drying cement to screw and nut.
Lubricate the two recesses of the sound optics with A&O61-3655 Grease.

6. AMPLIFIER SERVICING

A technical write-up giving details of the all-transistor amplifier for the Kodak Pageant Sound Projector, Model AV-126-TR, is available from Eastman Kodak Company, Apparatus Service Department, Rochester 4, New York.

6.1 PRINTED CIRCUITS - GENERAL

Servicing of printed circuit boards requires somewhat different techniques than those employed in trouble-shooting wired amplifiers. For one thing, more care is necessary in desoldering and soldering. Because excessive heat applied to a component board may cause permanent damage to it, a 30-to-50 watt, pencil-type soldering iron is recommended.

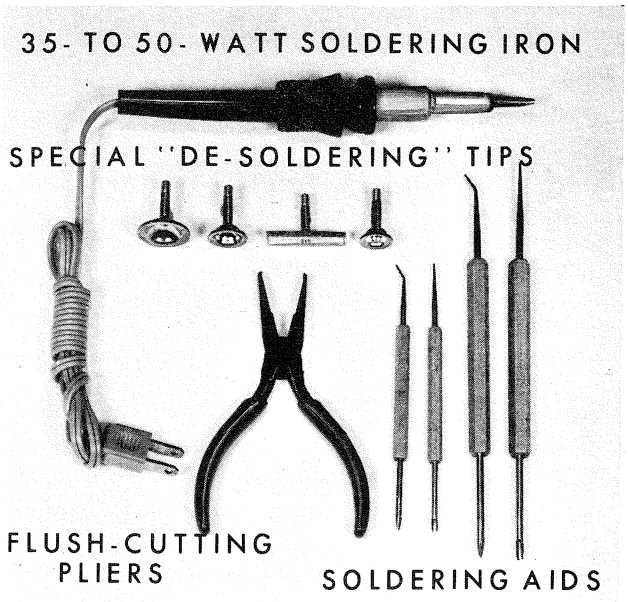

Generally, it will be found that removal of components is easier if flush cutting pliers are used to clip off the ends of the leads and some of the solder at the joint before the iron is applied to heat the joint. Hold the tip of the iron to the soldered joint only, not to the pattern near the joint. Avoid prolonged heating of the joint; remove the component as quickly as possible, using pliers, the forked end of a soldering aid, etc.
Very often, the forked end of a soldering aid can be used to reach in on the underside of a printed circuit board and remove a component located in an area that might be difficult to get to with some other tool. The reamer tip can be used to open up the holes in the board for the component leads.

Although a replacement component can usually be installed on the pattern side of the board without affecting amplifier performance, the AV-126-TR amplifier is designed so that most components can be easily installed in the original position. Again, avoid prolonged heating of the "printed" pattern at the joint when installing the component.

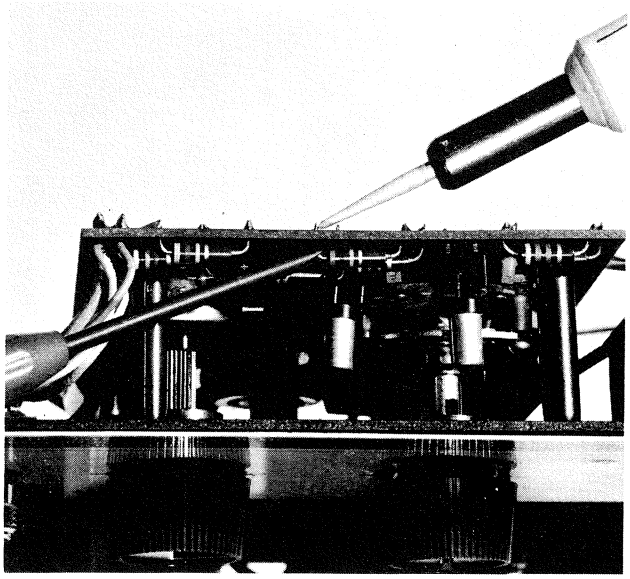

If a "printed" conductor is cracked, a simple repair can be made by first scraping the conductor about 1/4" on either side of the break to clean the copper and then applying a small piece of bare hookup wire over the break. The wire should be tinned before placing it in position. Hold the tip of the iron on the wire just long enough to allow the applied solder to flow across the break so that the wire is imbeded.

For detailed information on design and construction and additional hints on servicing printed circuits, refer to Printed Circuit Diagnosis Made Easy (a Howard W. Sams publication), to Rider's Introduction to Printed Circuits, and other books; also, to bulletins available from the various tube manufacturers.

6.2 TRANSISTORIZED CIRCUITS - GENERAL

Basic trouble shooting of a transistorized circuit is similar to tube circuitry except that the operating voltages are generally much lower. Voltmeter checks are done in exactly the same manner but care should be used in making ohmeter checks since component damage can result from the applied current. Although the transistor is probably the most reliable component in the circuit and should be the last component to be suspected, a transistor tester is a good investment and several good inexpensive models are available.

A certain amount of care is needed when handling a transistor; they are sensitive to heat and since the leads are generally quite small, proper orientation in the socket is important. A basic understanding of transistor operation and theory is very important to the serviceman and many sources of this information are available. Articles appear in nearly every issue of the various technical magazines and several manufacturers publish transistor manuals which contain a discussion on theory, construction, servicing, etc. More detailed information can be found in various books such as: "Basic Electronics Volume 6" (A Rider Publication), "Transistors - Theory and Practice" (a Gernsback Publication), and many others.

6.3 SERVICING THE AV-126-TR AMPLIFIER

To remove amplifier from the case see Section 5.2.

6.3.1 Power Supply

Since it is necessary to disconnect only the solar cell lead when removing the amplifier from the case, the amplifier can still be operated and tested. It may sometimes be necessary to use extension leads to allow easier accessibility to the amplifier. If a separate power supply is required, use a source of DC voltage that will supply a negative 25 to 30 volts measured across the amplifier filter capacitor C-13. Tool #1034 is available for this purpose, or one can be made as shown below, using parts from the amplifier power supply.

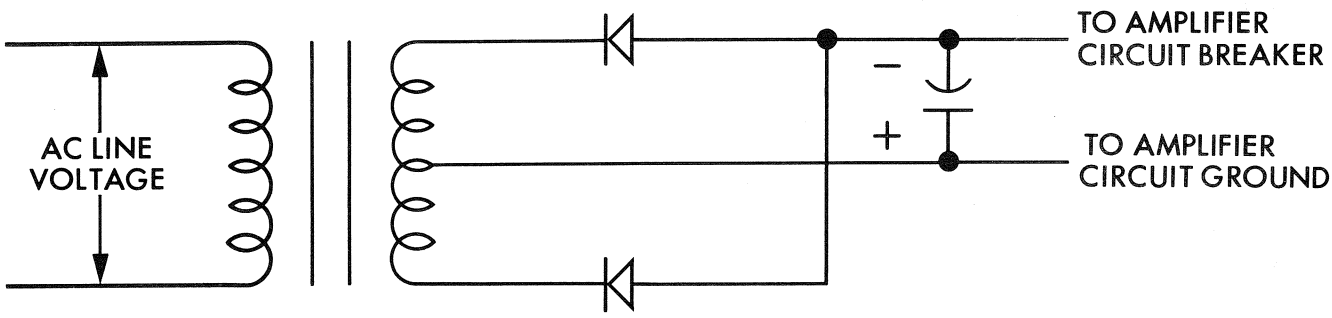

1 -#159637 TRANSFORMER
2 -#164193 SILICON RECTIFIER (RCA TYPE IN 3253 200 PIV, 750 ma)
1 -#159416 - 1500 MFD 5VDC ELECTROLYTIC CAPACITOR

6.3.2 SERVICE HINTS

a) Although many of the components can be removed and replaced without separating the printed circuit board from the amplifier plate, these operations can be more easily performed if the amplifier is "opened-up". To do this, proceed as follows:

1. Remove the control knobs (tone control - friction fit, volume control - setscrew).

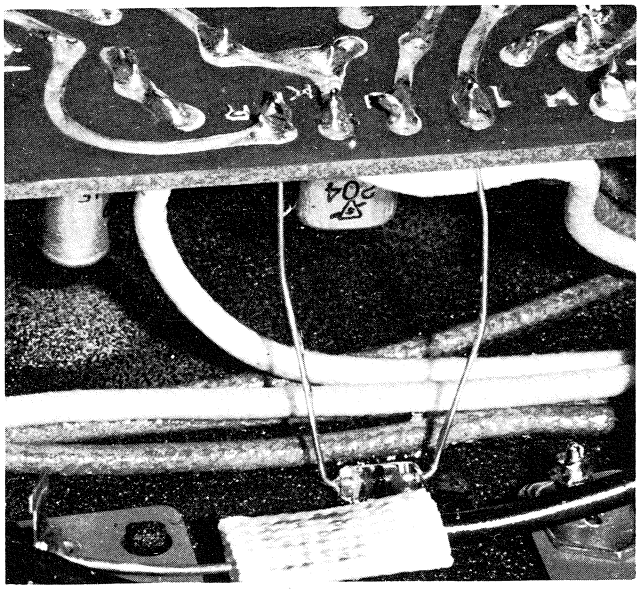

2. Unsolder the two leads of the Diode Stabistor (CR-5) that is cemented to the amplifier plate.

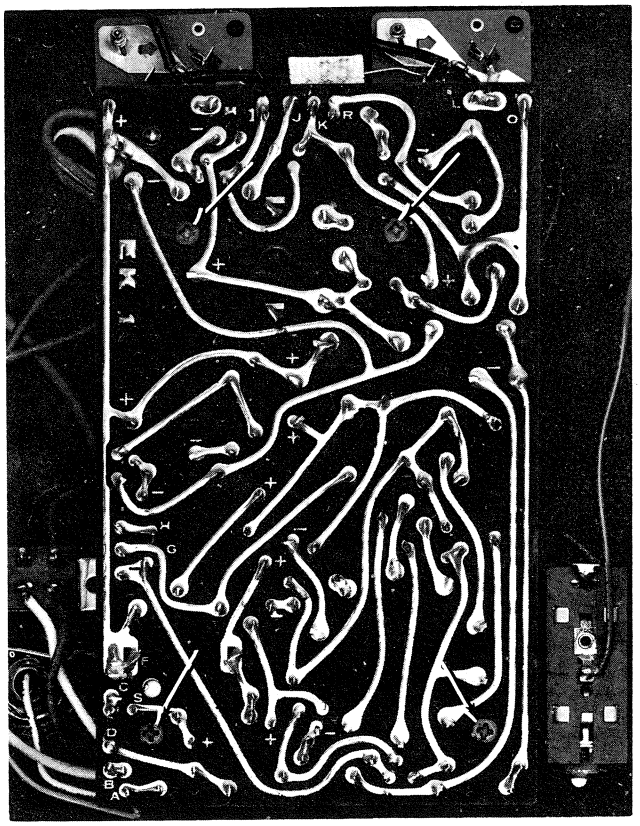

3. Remove the four circuit board mounting screws (arrows) and swing board over.

b) The 500K bias control (R-28) is variable so that the exact value of correct bias may be selected for any given set of transistors. If any of the transistors are replaced, it may be necessary to adjust R-28 to obtain the proper undistorted output (Section 6.3.3a).

c) The 25K potentiometer (R-34) is used to compensate for the slight variations in the sensitivity of different solar cells. It will require adjusting only if the solar cell, exciter lamp, or transistors Q1 or Q2 are changed. Adjust to obtain the proper undistorted output (Section 6.3.3a).

d) When replacing either Q7 or Q8 (2N307 or T1-370 Transistor) apply a moderate amount of Transistor Z-5 Silicon Compound No.8101 (General Cement Electronics Company) to both sides of the insulating washers.

6.3.3 Specification (input voltage to amplifier, 117)

a) Output: * 6.7 volts minimum 400 cycle test film as signal source, no visible distortion on an oscilliscope (a slight amount of "filling-in" will be visible in the lower half of the signal which does not affect the undistorted output).

b) Sensitivity: (Tone Control full counterclockwise)

1. Film Channel - 8 watts (* 6.9 volts) output, 1000 cycle signal of 0.66 millivolts ± 4 db applied directly to the photocell input socket.

2. Microphone Channel - 8 watts (*6.9 volts) output, 100 cycle signal of 22 millivolts ± 3 db applied directly to the microphone input receptacle.

3. Phonograph Channel - 8 watts (* 6.9 volts) output, 1000 cycle signal of 220 millivolts ± 3 db applied directly to the phonograph input receptacle.

c) Power supply

1. DC voltage to the amplifier: 25 to 30 volts (no load), measured across the filter capacitor C-13 at line voltage.

2. DC voltage to the exciter lamp: 4.0 ± 0.2 volts with ripple content not exceeding 150 millivolts, measured across a resistor load of 5 ohms ± 1%, 5 watts (in place of the exciter lamp) at a line voltage of 117.

* Measured across a 6 ohm, 25 watt, dummy speaker load.

7.1 POWER SUPPLY AND MASTER CONTROL SWITCH

T-1	159637	POWER TRANSFORMER
CR-1-2-3-4	164193	750 MA 200V. PIV. DIODE
R-18	154868	500 OHM ±10% 2 WATT W.W.
R-26	159633	25 OHM ±10% 25 WATT
C-14 AND 15	159634	1300 MFD 35 V.D.C. ELEC.

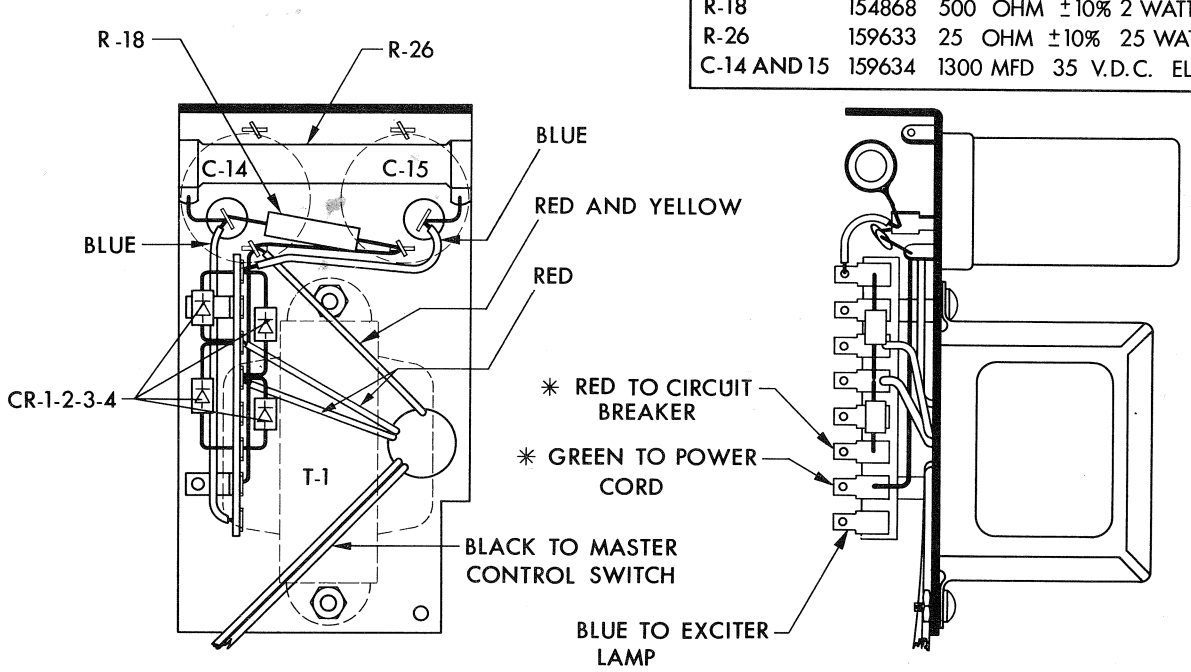

✳ DISCONNECT TO REMOVE MECHANISM

POWER SUPPLY

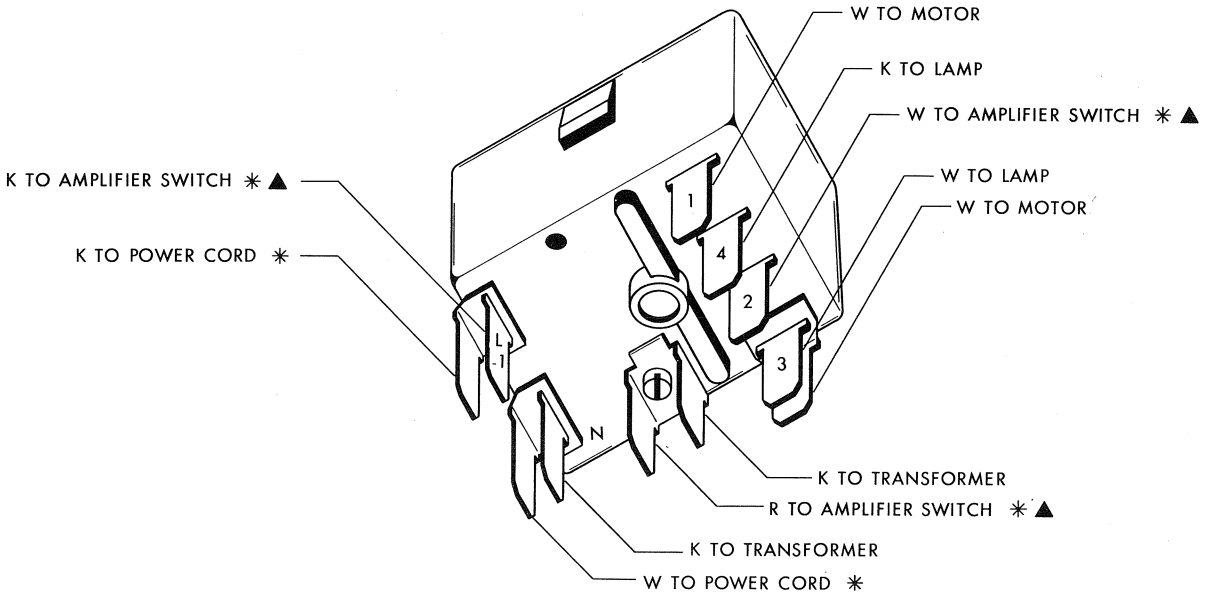

✳ DISCONNECT TO REMOVE MECHANISM
▲ DISCONNECT TO REMOVE AMPLIFIER COMPLETE

MASTER CONTROL SWITCH

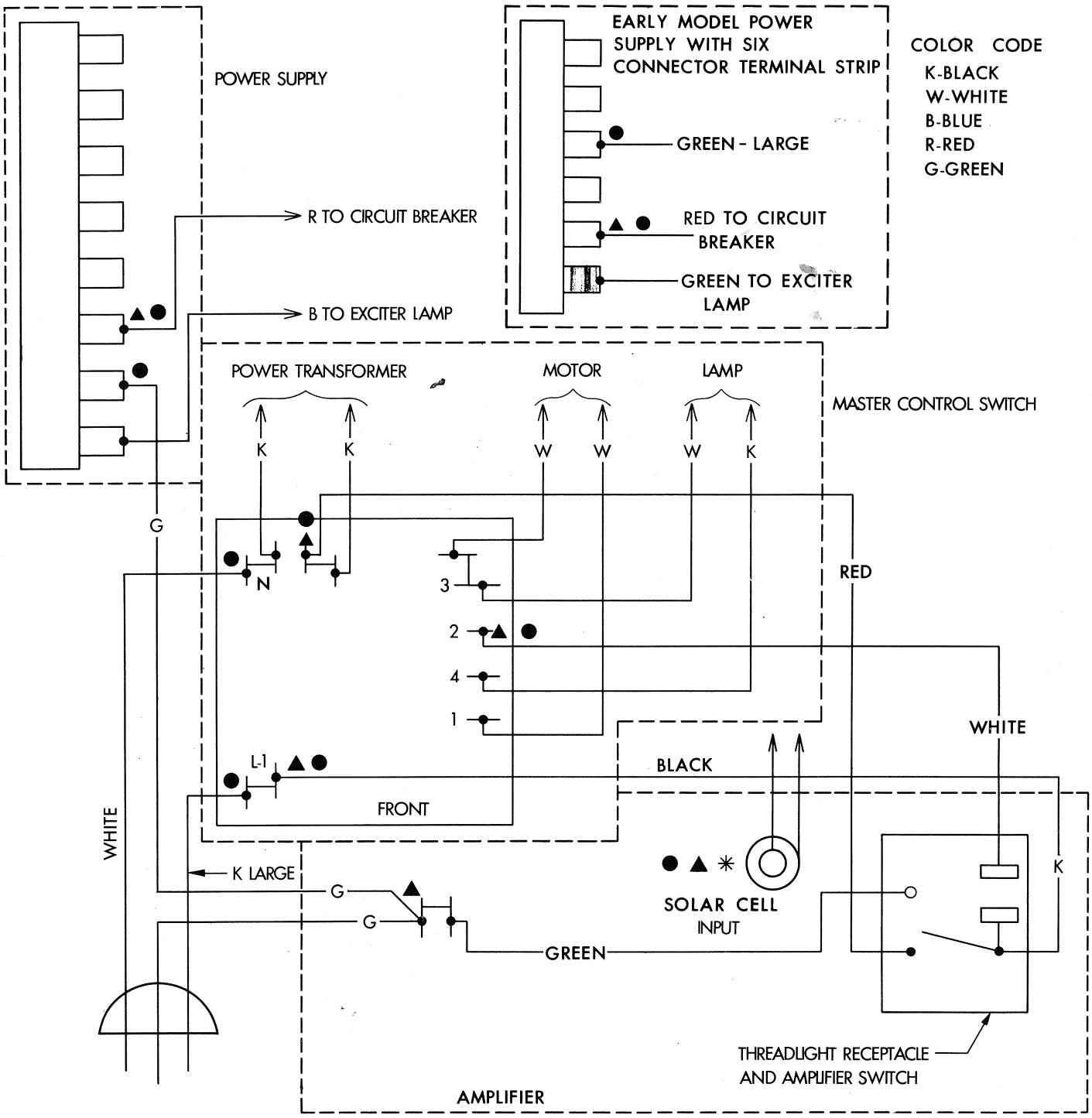

✳ DISCONNECT TO REMOVE AMPLIFIER (AMPLIFIER WILL STILL OPERATE)

▲ DISCONNECT TO REMOVE AMPLIFIER COMPLETELY

● DISCONNECT TO REMOVE MECHANISM

SWITCH AND TERMINAL CONNECTIONS AV-126-TR

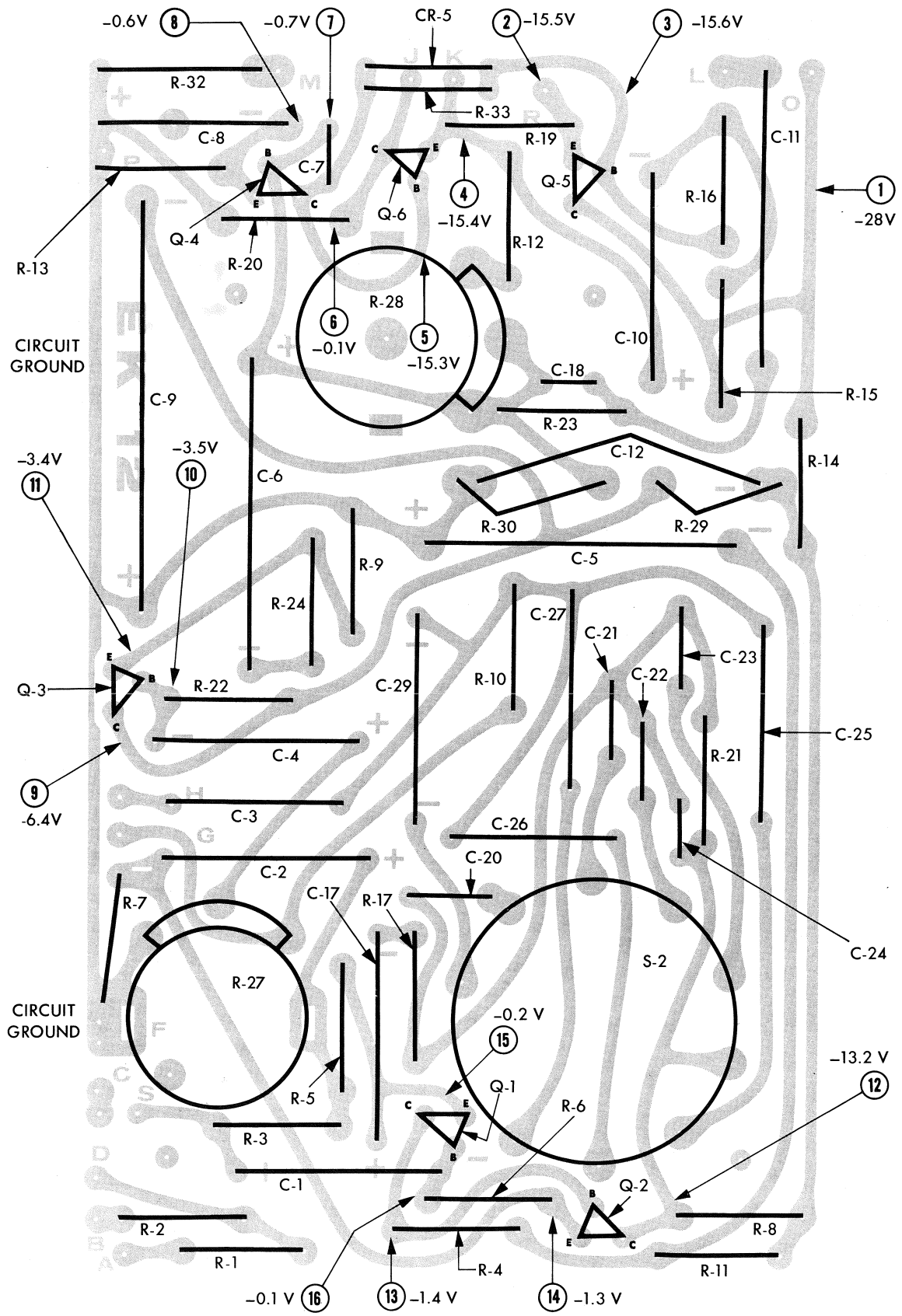

VOLTAGE - CHECK AND COMPONENT LOCATING DIAGRAM

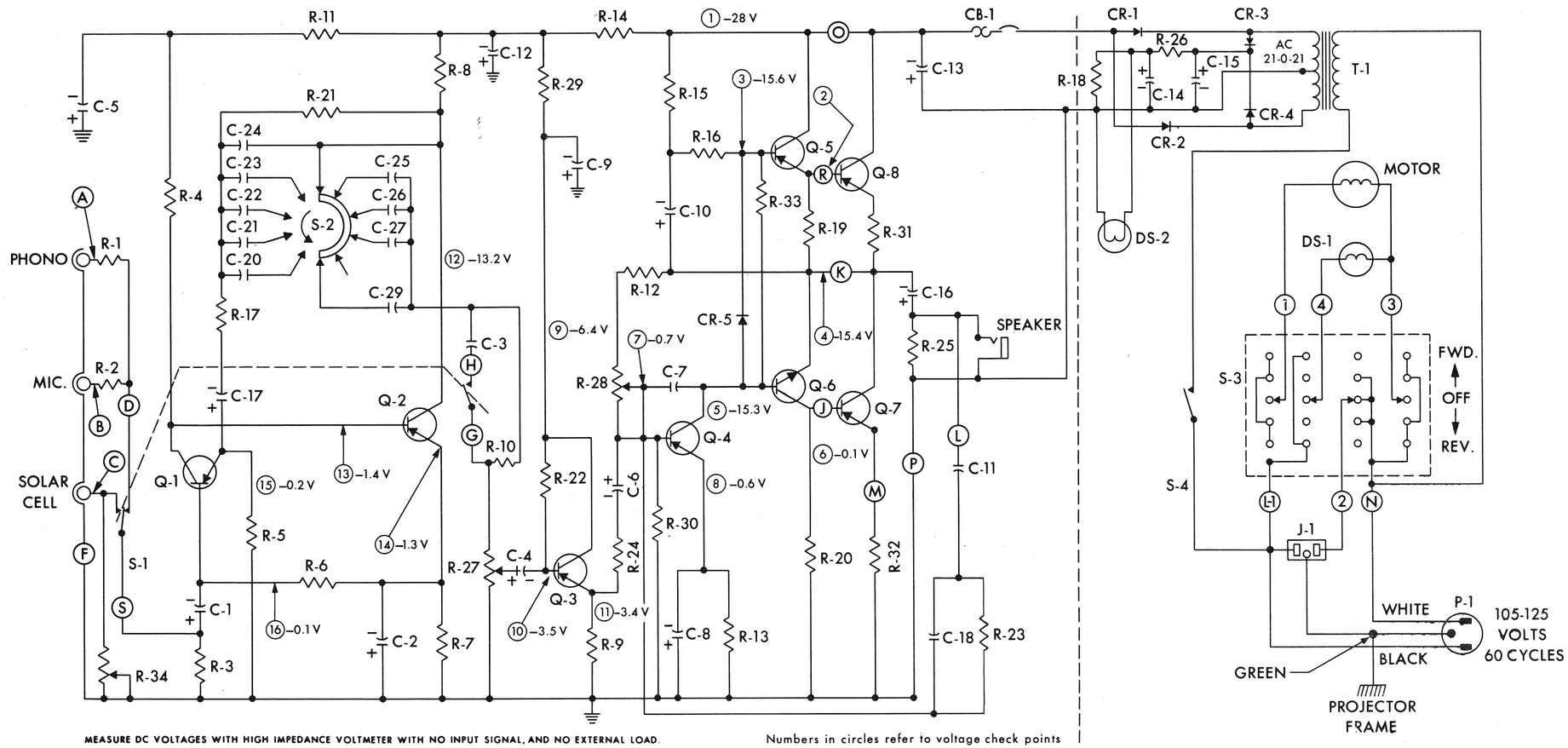

MEASURE DC VOLTAGES WITH HIGH IMPEDANCE VOLTMETER WITH NO INPUT SIGNAL, AND NO EXTERNAL LOAD.

Numbers in circles refer to voltage check points

NOMENCLATURE FOR AMPLIFIER COMPONENTS

R-1	126101	470K±10% 1/2 WATT	R-22	120508	68K±10% 1/2 WATT	C-9	159410	125MFD 50V.D.C. ELEC.	CR-1	164193	750MA 200V.PIV. DIODE
R-2	126398	47K±10% 1/2 WATT	R-23	126903	22K±10% 1/2 WATT	C-10	159413	10MFD 50V.D.C. ELEC.	CR-2	164193	750MA 200V.PIV.DIODE
R-3	160558	3.6K±5% 1/2 WATT	R-24	159406	220ohm±10% 1/2 WATT	C-11	160673	0.68MFD±10%100V.D.C.	CR-3	164193	750MA 200V.PIV.DIODE
R-4	126900	10K±10% 1/2 WATT	R-25	159407	47ohm±10% 2 WATT	C-12	162883	60MFD 50V.D.C. ELEC.	CR-4	164193	750MA 200V.PIV.DIODE
R-5	136709	47ohm±10% 1/2 WATT	R-26	159633	25ohm±10% 25 WATT	C-13	159416	1500MFD 50V.D.C. ELEC.	Q-1	159424	PNP TRANSISTOR 2N109 OR 2N1370
R-6	126398	47K±10% 1/2 WATT	R-27	159427	5K VOLUME CONTROL	C-14	159634	1300MFD 35V.D.C. ELEC.	Q-2	159424	PNP TRANSISTOR 2N109 OR 2N1370
R-7	119816	1K±10% 1/2 WATT	R-28	159428	500K BIAS CONTROL	C-15	159634	1300MFD 35V.D.C. ELEC.	Q-3	159424	PNP TRANSISTOR 2N109 OR 2N1370
R-8	126900	10K±10% 1/2 WATT	R-29	154866	5.6K±10% 1/2 WATT	C-16	159416	1500MFD 50V.D.C. ELEC.	Q-4	159424	PNP TRANSISTOR 2N109 OR 2N1370
R-9	119816	1K±10% 1/2 WATT	R-30	120504	33K±10% 1/2 WATT	C-17	161022	25MFD 10V.D.C. ELEC.	Q-5	159424	PNP TRANSISTOR 2N109 OR 2N1370
R-10	152753	7.5K±5% 1/2 WATT	R-31	160672	0.25ohm±5% 1/2 WATT	C-18	159418	100MMFD 50 V. MIN.	Q-6	159425	NPN TRANSISTOR 2N35 OR 2N1304
R-11	126394	4.7K±10% 1/2 WATT	R-32	160672	0.25ohm±5% 1/2 WATT	C-20	161020	.005MFD 50V. MIN.	Q-7	159426	PNP TRANSISTOR 2N307 OR TI-370
R-12	143223	150K±10% 1/2 WATT	R-33	872378	100ohm±10% 1/2 WATT	C-21	159420	.004MFD 50V. MIN.	Q-8	159426	PNP TRANSISTOR 2N307 OR TI-370
R-13	126401	150ohm±10% 1/2 WATT	*R-34	164603	25K POT.	C-22	161021	.0018MFD 50V. MIN.	S-1	154870	DPDT SLIDE SWITCH
R-14	159406	220ohm±10% 1/2 WATT	C-1	161022	25MFD 10V.D.C. ELEC.	C-23	161021	.0018MFD 50V. MIN.	S-2	159435	5 POS. ROTARY-TONE CONTROL
R-15	119816	1K±10% 1/2 WATT	C-2	161022	25MFD 10V.D.C. ELEC.	C-24	159418	100MMFD 50V. MIN.	S-3	159533	PROJ. CONTROL SWITCH
R-16	870569	2.7K±10% 1/2 WATT	C-3	159649	.022MFD 100 V.D.C.	C-25	159409	.027MFD 100V. MIN.	S-4	159445	AMP. SWITCH &
R-17	872379	1.2K±10% 1/2 WATT	C-4	161022	25MFD 10V.D.C. ELEC.	C-26	159414	.033MFD 100V. MIN.	J-1		TH'D'L'T SOCKET ASS'Y
R-18	154868	500ohm±10% 2 WATT W.W.	C-5	159408	75MFD 25V.D.C. ELEC.	C-27	159419	.047MFD 100V. MIN.	DS-1		PROJECTION LAMP
R-19	153447	200ohm±5% 1/2 WATT	C-6	159408	75MFD 25V.D.C. ELEC.	C-29	159413	10MFD 50V.D.C. ELEC.	DS-2		EXCITER LAMP
R-20	153447	200ohm±5% 1/2 WATT	C-7	159411	50MMFD 50V.MIN.	CR-5	159444	DIODE STABISTOR S320G	P-1	159551	POWER CORD
R-21	120506	15K±10% 1/2 WATT	C-8	159412	60MFD 6V.D.C. ELEC.	CB-1	151383	CIRCUIT BREAKER	T-1	159637	POWER TRANSFORMER

*ADDED BEGINNING WITH "B" SERIAL NUMBERS

AMPLIFIER SCHEMATIC CIRCUIT FOR KODAK PAGEANT SOUND PROJECTOR, MODEL AV-126-TR

NOMENCLATURE FOR AMPLIFIER COMPONENTS

R-1	126101	470K±10% 1/2 WATT
R-2	126398	47K±10% 1/2 WATT
R-3	160558	3.6K±5% 1/2 WATT
R-4	126900	10K±10% 1/2 WATT
R-5	136709	47ohm±10% 1/2 WATT
R-6	126398	47K±10% 1/2 WATT
R-7	119816	1K±10% 1/2 WATT
R-8	126900	10K±10% 1/2 WATT
R-9	119816	1K±10% 1/2 WATT
R-10	152753	7.5K±5% 1/2 WATT
R-11	126394	4.7K±10% 1/2 WATT
R-12	143223	150K±10% 1/2 WATT
R-13	126401	150ohm±10% 1/2 WATT
R-14	159406	220ohm±10% 1/2 WATT
R-15	119816	1K±10% 1/2 WATT
R-16	870569	2.7K±10% 1/2 WATT
R-17	872379	1.2K±10% 1/2 WATT
R-18	154868	500ohm±10% 2 WATT W.W.
R-19	153447	200ohm±5% 1/2 WATT
R-20	153447	200ohm±5% 1/2 WATT
R-21	120506	15K±10% 1/2 WATT
R-22	120508	68K±10% 1/2 WATT
R-23	126903	22K±10% 1/2 WATT
R-24	159406	220ohm±10% 1/2 WATT
R-25	159407	47ohm±10% 2 WATT
R-26	159633	25ohm±10% 25 WATT
R-27	159427	5K VOLUME CONTROL
R-28	159428	500K BIAS CONTROL
R-29	154866	5.6K±10% 1/2 WATT
R-30	120504	33K±10% 1/2 WATT
R-31	160672	0.25ohm±5% 1/2 WATT
R-32	160672	0.25ohm±5% 1/2 WATT
R-33	872378	100ohm±10% 1/2 WATT
* R-34	164603	25K POT.
C-1	161022	25MFD 10V.D.C. ELEC.
C-2	161022	25MFD 10V.D.C. ELEC.
C-3	159649	.022MFD 100 V.D.C.
C-4	161022	25MFD 10V.D.C. ELEC.
C-5	159408	75MFD 25V.D.C. ELEC.
C-6	159408	75MFD 25V.D.C. ELEC.
C-7	159411	50MMFD 50V.MIN.
C-8	159412	60MFD 6V.D.C. ELEC.
C-9	159410	125MFD 50V.D.C. ELEC.
C-10	159413	10MFD 50V.D.C. ELEC.
C-11	160673	0.68MFD±10%100V.D.C.
C-12	162883	60MFD 50V.D.C. ELEC.
C-13	159416	1500MFD 50V.D.C. ELEC.
C-14	159634	1300MFD 35V.D.C. ELEC.
C-15	159634	1300MFD 35V.D.C. ELEC.
C-16	159416	1500MFD 50V.D.C. ELEC.
C-17	161022	25MFD 10V.D.C. ELEC.
C-18	159418	100MMFD 50 V. MIN.
C-20	161020	.005MFD 50V. MIN.
C-21	159420	.004MFD 50V. MIN.
C-22	161021	.0018MFD 50V. MIN.
C-23	161021	.0018MFD 50V. MIN.
C-24	159418	100MMFD 50V. MIN.
C-25	159409	.027MFD 100V. MIN.
C-26	159414	.033MFD 100V. MIN.
C-27	159419	.047MFD 100V. MIN.
C-29	159413	10MFD 50V.D.C. ELEC.
CR-5	159444	DIODE STABISTOR S320G
CB-1	151383	CIRCUIT BREAKER
CR-1	164193	750MA 200V.PIV. DIODE
CR-2	164193	750MA 200V.PIV.DIODE
CR-3	164193	750MA 200V.PIV.DIODE
CR-4	164193	750MA 200V.PIV.DIODE
Q-1	159424	PNP TRANSISTOR 2N109 OR 2N1370
Q-2	159424	PNP TRANSISTOR 2N109 OR 2N1370
Q-3	159424	PNP TRANSISTOR 2N109 OR 2N1370
Q-4	159424	PNP TRANSISTOR 2N109 OR 2N1370
Q-5	159424	PNP TRANSISTOR 2N109 OR 2N1370
Q-6	159425	NPN TRANSISTOR 2N35 OR 2N1304
Q-7	159426	PNP TRANSISTOR 2N307 OR TI-370
Q-8	159426	PNP TRANSISTOR 2N307 OR TI-370
S-1	154870	DPDT SLIDE SWITCH
S-2	159435	5 POS. ROTARY-TONE CONTR
S-3	159533	PROJ. CONTROL SWITCH
S-4	159445	AMP. SWITCH &
J-1		TH'D'L'T SOCKET ASS'Y
DS-1		PROJECTION LAMP
DS-2		EXCITER LAMP
P-1	159551	POWER CORD
T-1	159637	POWER TRANSFORMER

* ADDED BEGINNING WITH "B" SERIAL NUMBERS

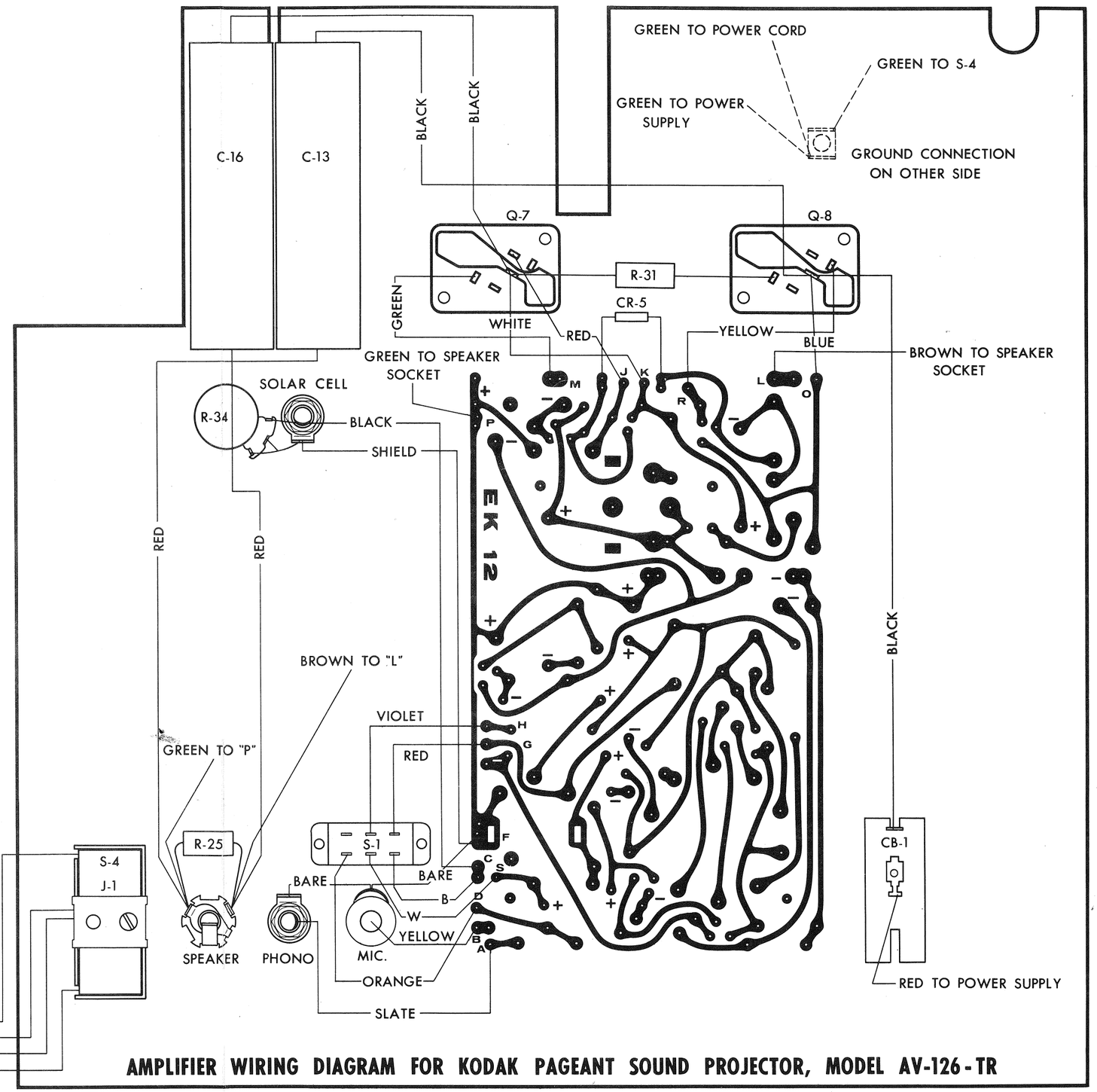

AMPLIFIER WIRING DIAGRAM FOR KODAK PAGEANT SOUND PROJECTOR, MODEL AV-126-TR

7.6 COMPONENT BOARD

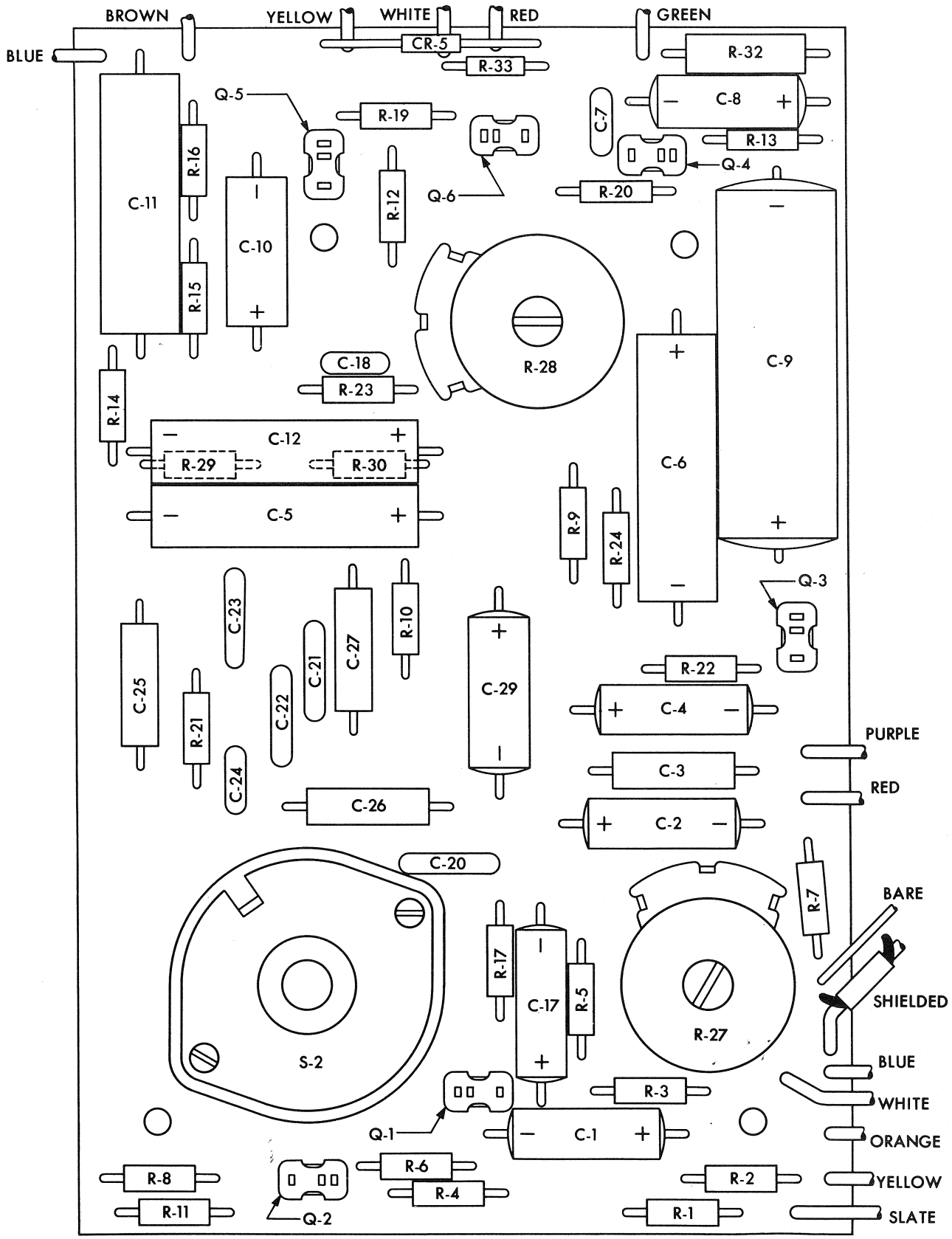

COMPONENT BOARD

No. 769023

Parts List

Corrected to MARCH 1963

KODAK PAGEANT SOUND PROJECTOR

Model AV-256-TR

BEGINNING WITH SERIAL No. 256-B01001

SEE FIGURES 8, 9, AND 10

SEE FIGURES 11 THRU 14

BELT–162128

BELT–123851

SCREW (3)–122713

KODAK PROJECTION EKTANAR LENS
2-INCH-F/1.6
KODAK PROJECTION EKTANON LENS
1 ½-INCH-F/2.0
3-INCH-F/2·0
4-INCH-F/2·5
(RETURN TO ROCHESTER FOR REPAIR)
(Listed in Kodak Price Catalog)

SEE FIGURE 4

SCREW–122714

KNOB–162816
SETSCREW–123153

SEE FIGURE 75

CORD–159551

SEE FIGURES 5 AND 6

SEE FIGURE 78

SCREW (4)–851597

ADAPTER–153930

FIGURE 1

GRILLE–162914

SEE FIGURE 75

SLEEVE–124404
(Inside case)

GROMMET–125854
(Inside case)

WASHER–56786
(Inside case)

GROMMET–125854

FOOT (4)–128838
SCREW (4)–122791
WASHER (AR)–155229

WASHER–75847

SCREW–122767

FIGURE 2 CASE BOTTOM

WASHER (2)–164128

SCREW (2)–164127

WASHER (2)–138229

FIGURE 3 CASE BACK

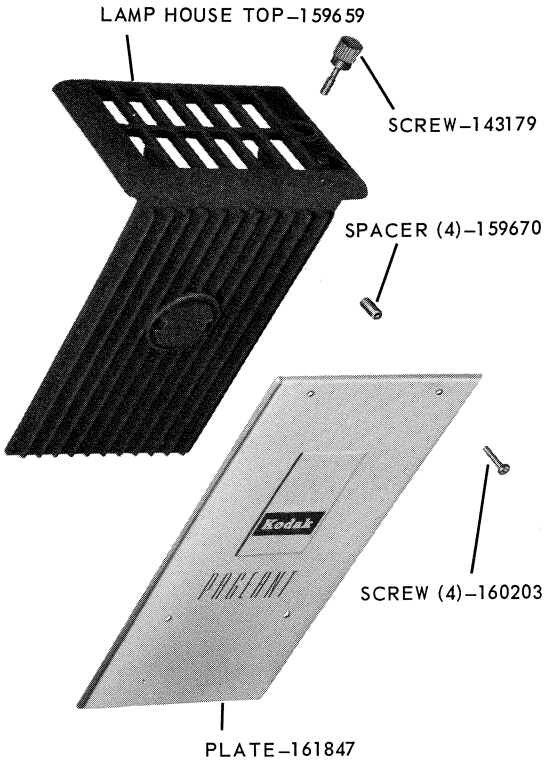

FIGURE 4

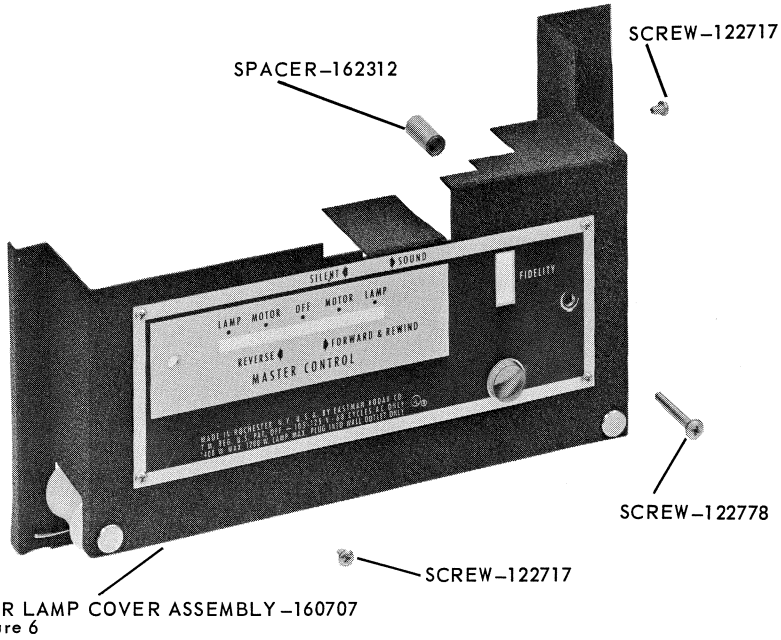

FIGURE 5

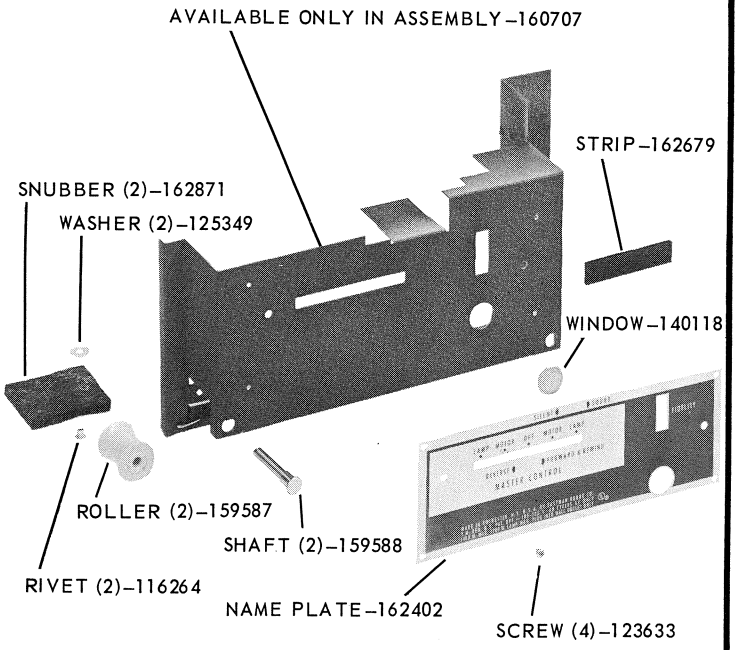

FIGURE 6 EXCITER LAMP COVER ASSEMBLY–160707

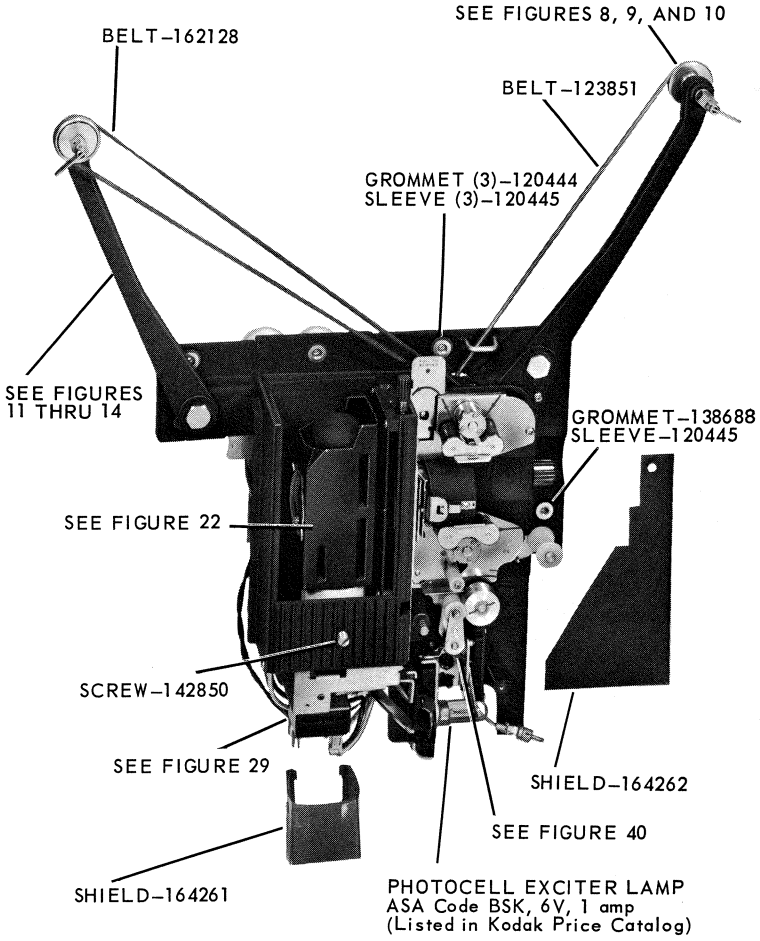

FIGURE 7

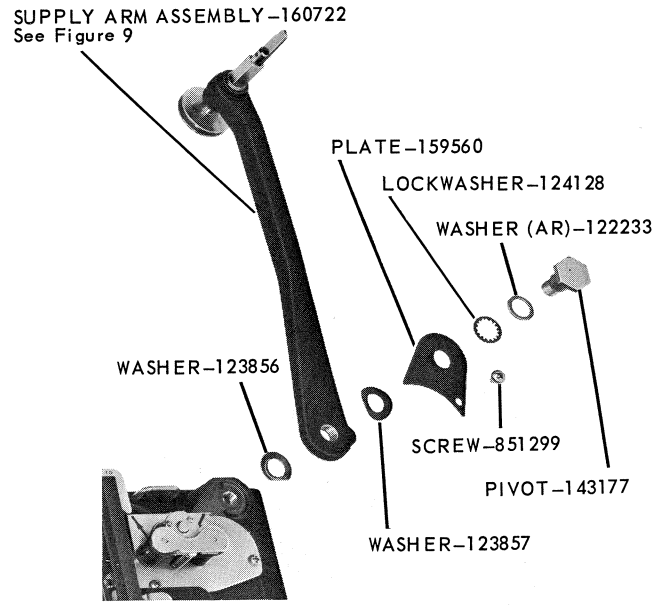

FIGURE 8 SUPPLY ARM ASSEMBLY AND RELATED PARTS

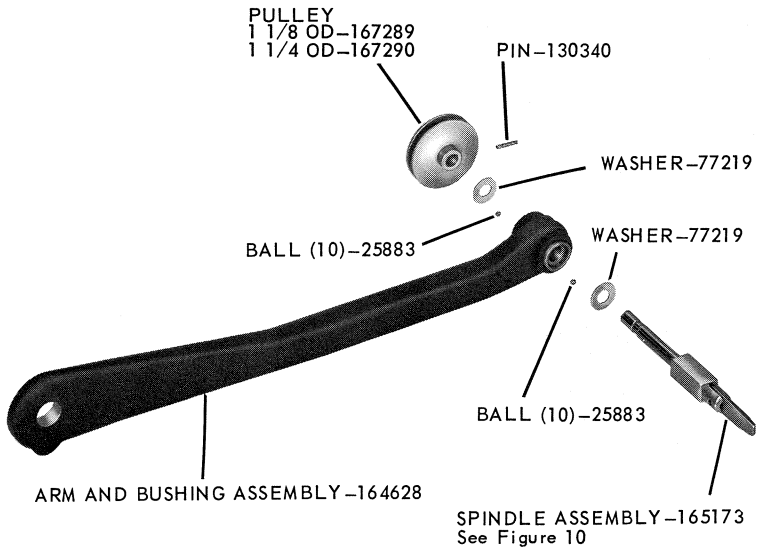

FIGURE 9 SUPPLY ARM ASSEMBLY–160722

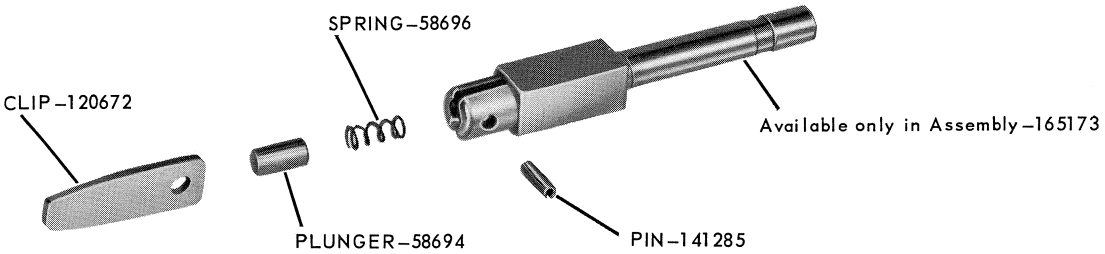

FIGURE 10 SPINDLE ASSEMBLY–165173

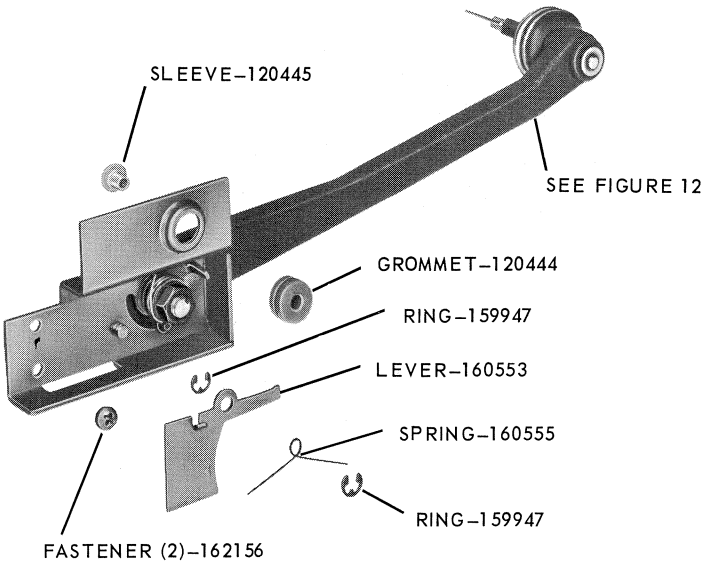

FIGURE 11 TAKE-UP ARM AND RELATED PARTS

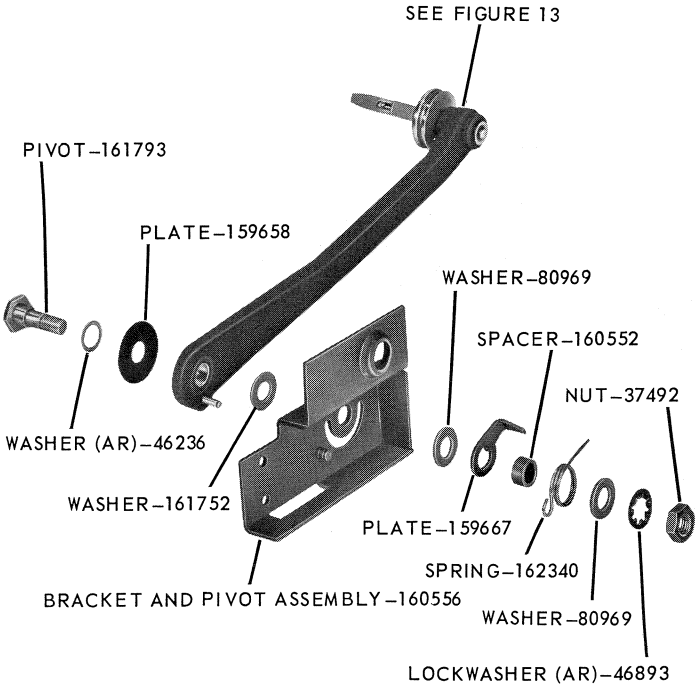

FIGURE 12

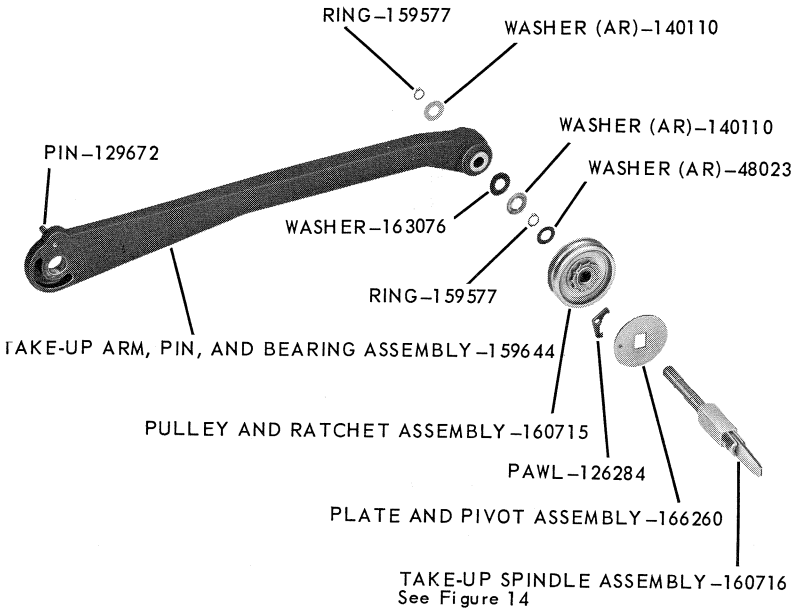

FIGURE 13

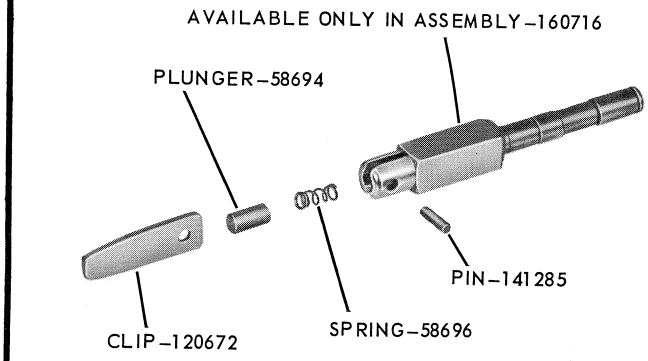

FIGURE 14 TAKE-UP SPINDLE ASSEMBLY–160716

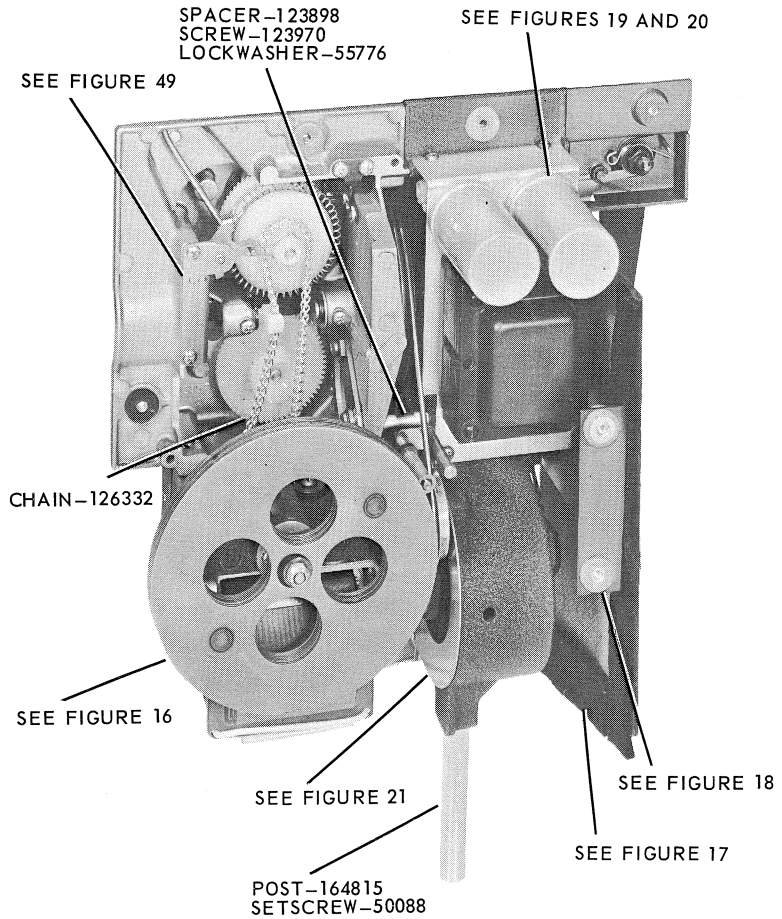

FIGURE 15

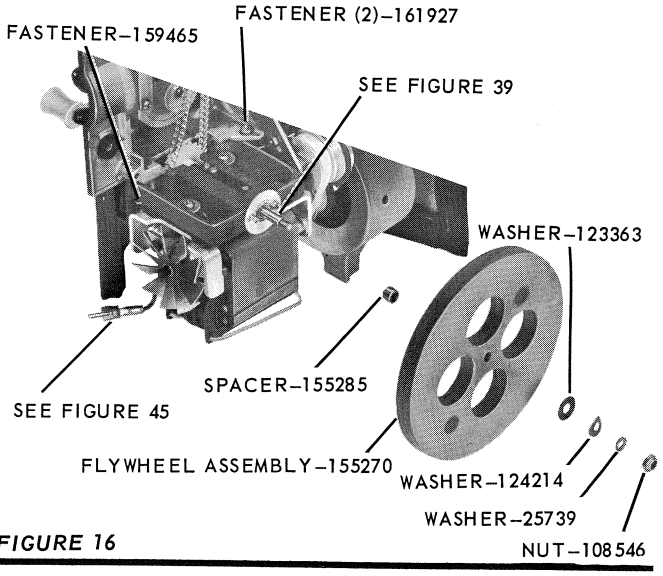

FIGURE 16

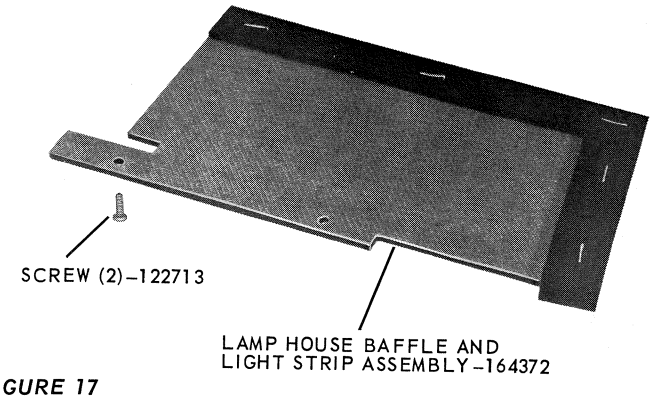

FIGURE 17

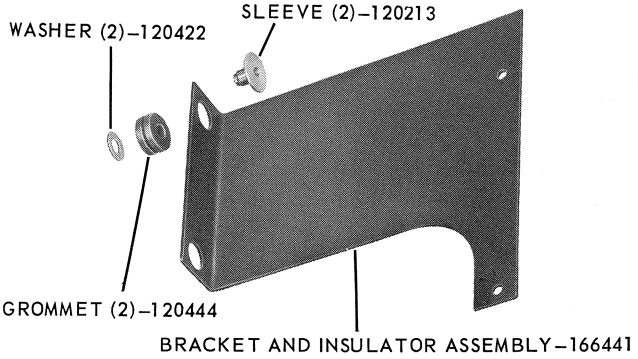

FIGURE 18

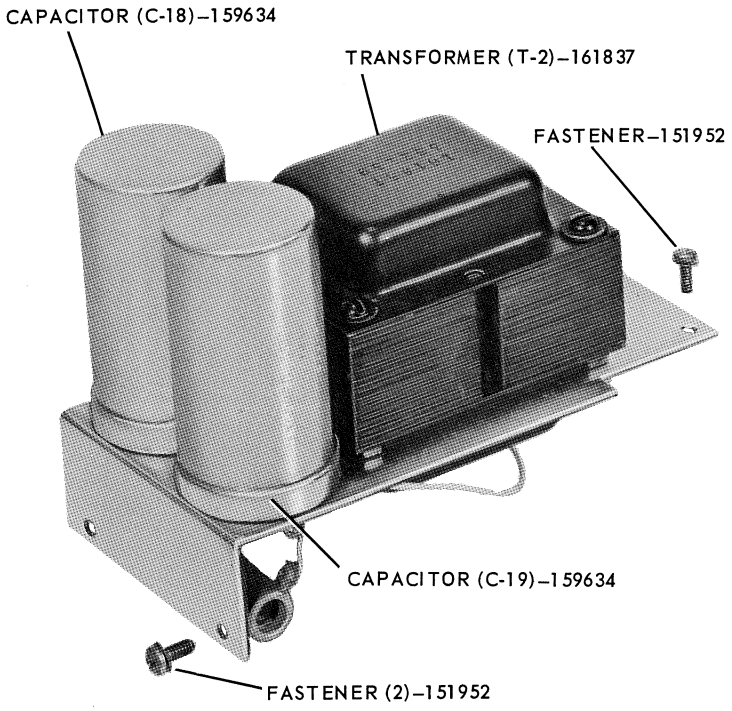

FIGURE 19 AMPLIFIER AND EXCITER LAMP POWER SUPPLY ASSEMBLY–161845
See Figure 20

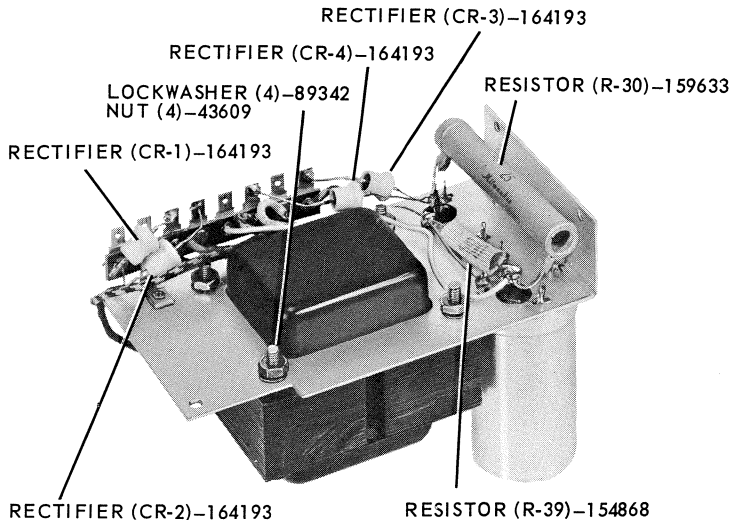

FIGURE 20 AMPLIFIER AND EXCITER LAMP POWER SUPPLY ASSEMBLY–161845

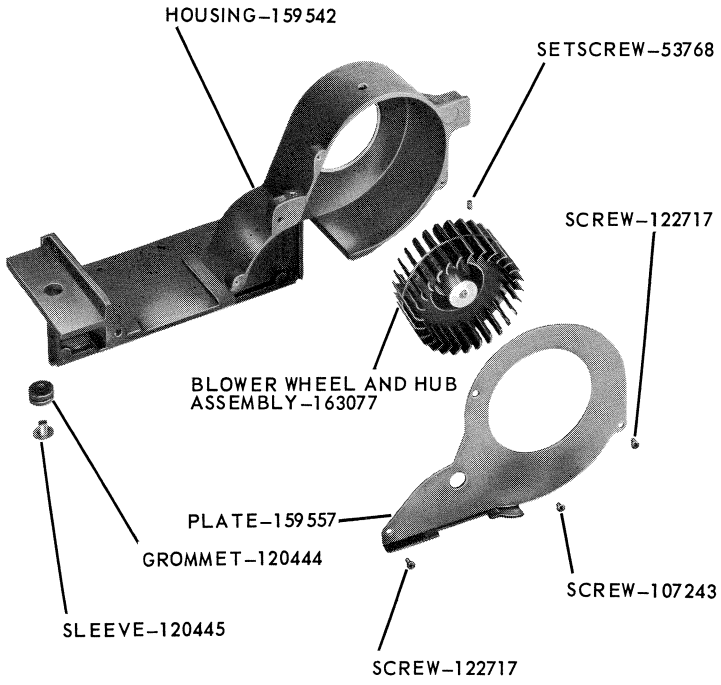

FIGURE 21

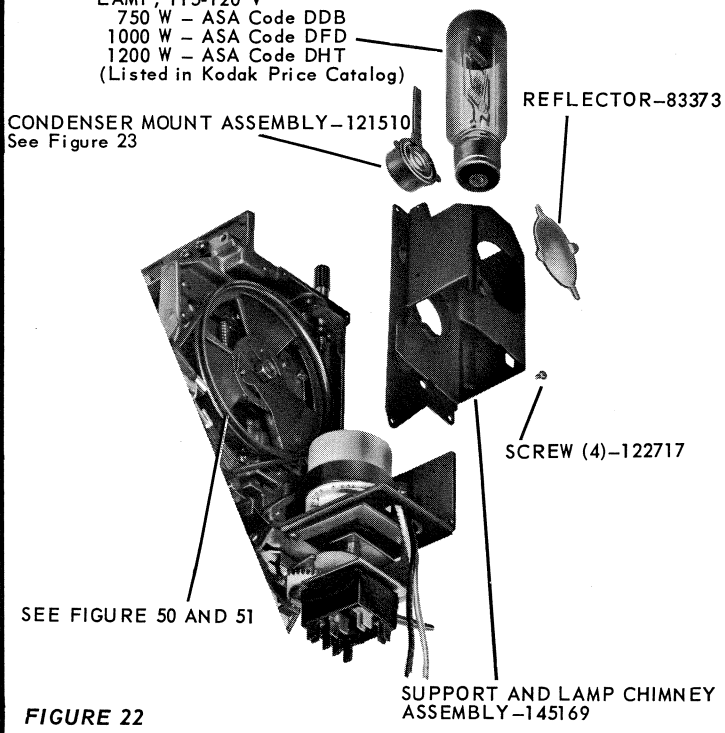

FIGURE 22

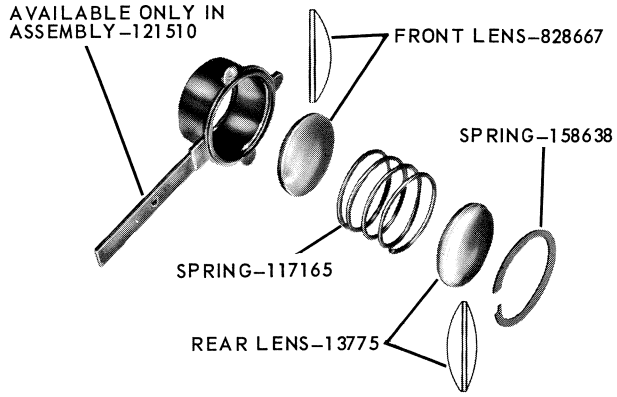

FIGURE 23 CONDENSER MOUNT ASSEMBLY–121510

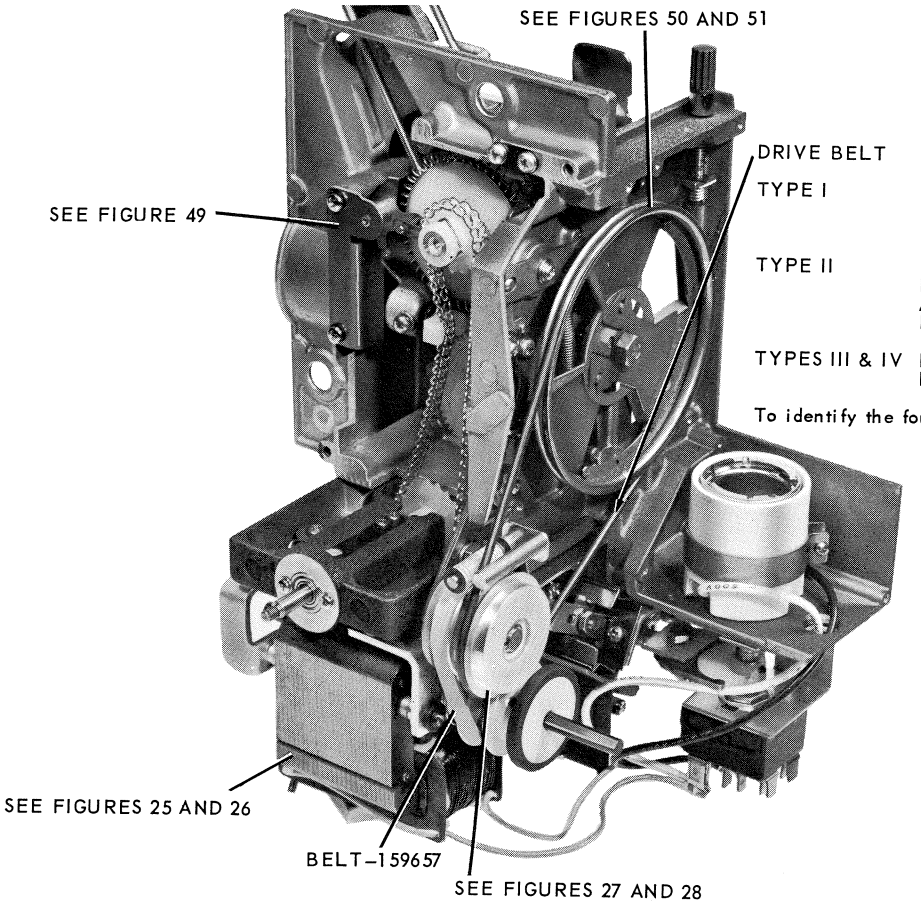

TYPE I	Replace with: Kit No. K–1655. See figure 35 Remove brushes shown in figure 30
TYPE II	Replace with: Drive Belt–166044 Arm and Pulley Assembly–160718 Remove brushes shown in figure 31
TYPES III & IV	Replace with: Drive Belt–166044

To identify the four types, refer to figures 30, 31, 32 and 33

FIGURE 24

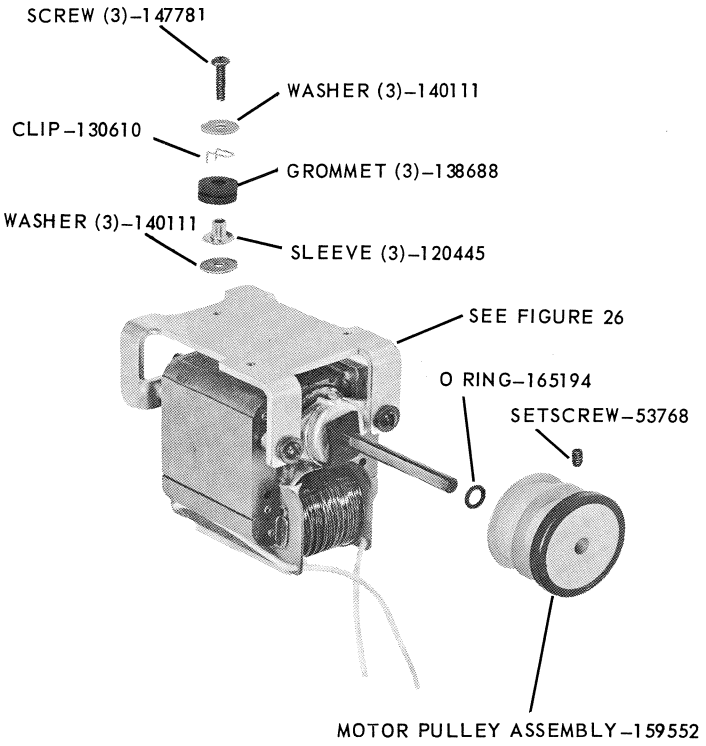

FIGURE 25

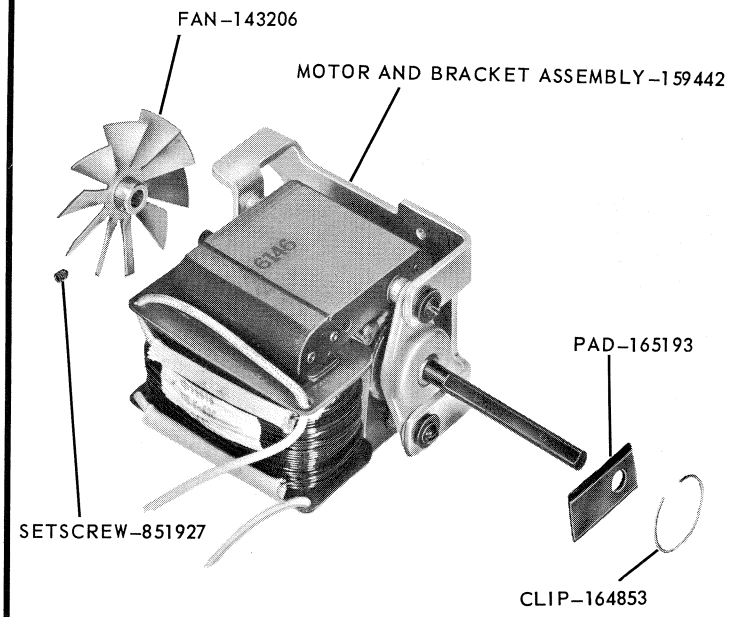

FIGURE 26

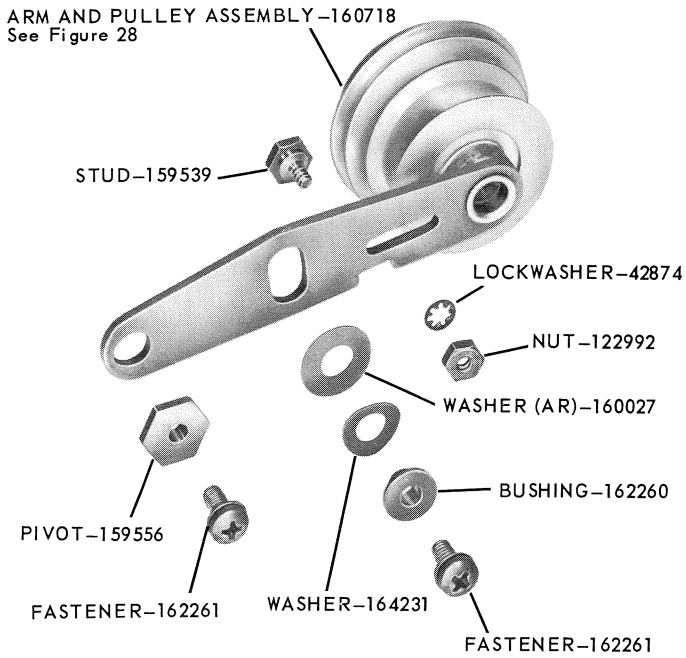

FIGURE 27

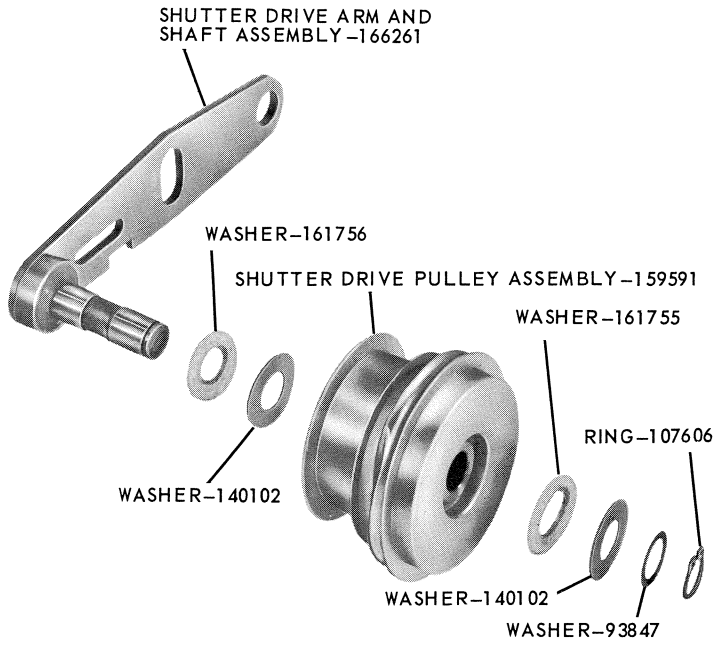

FIGURE 28 ARM AND PULLEY ASSEMBLY–160718

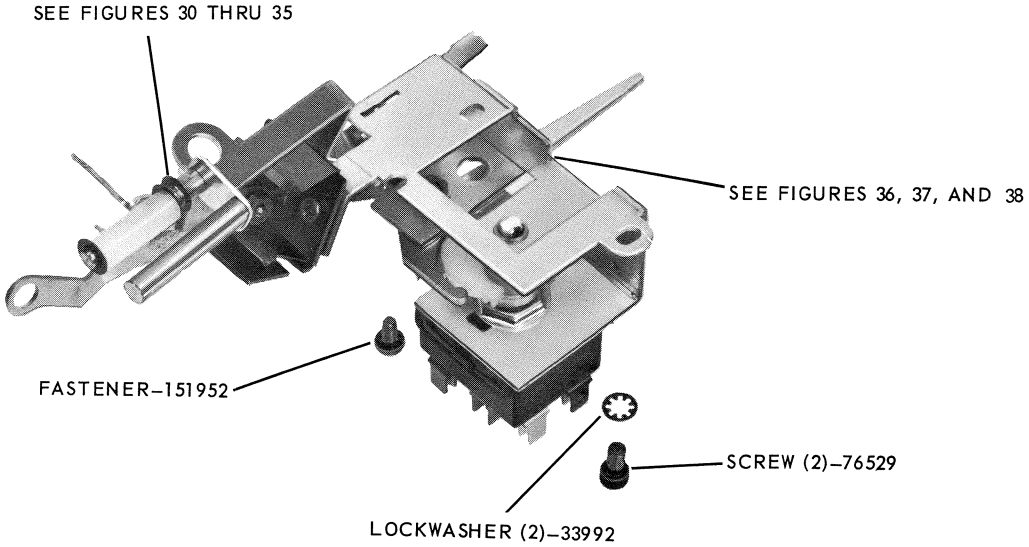

FIGURE 29 CONTROL BRACKET AND RELATED PARTS

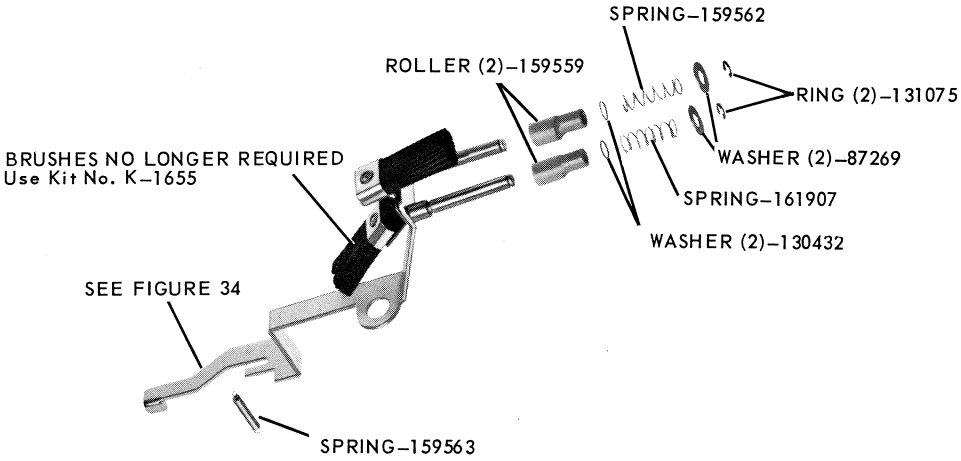

FIGURE 30 TYPE I

Always give PART NUMBER and NAME when ordering parts

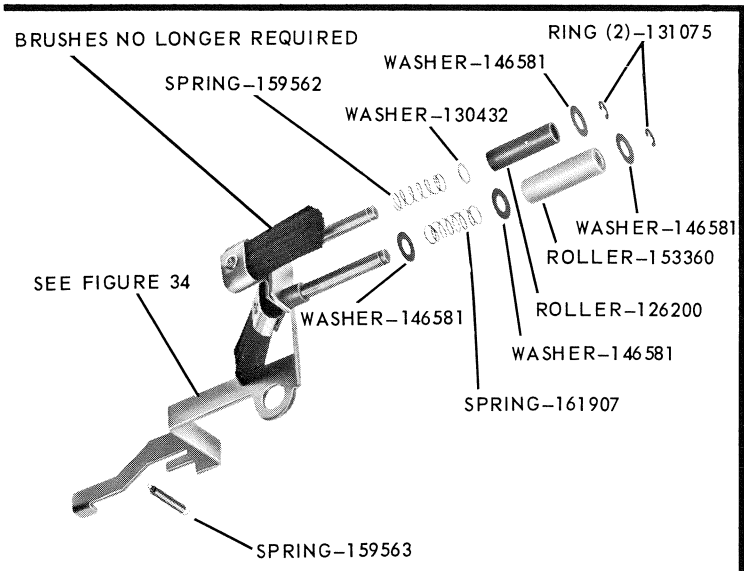

FIGURE 31 TYPE II

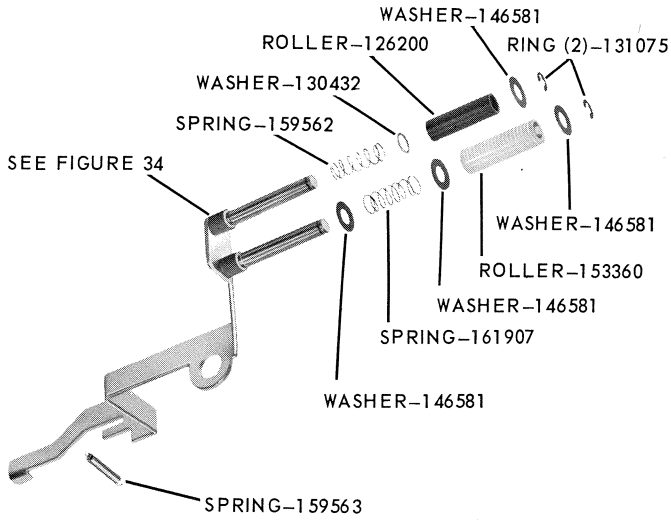

FIGURE 32 TYPE III

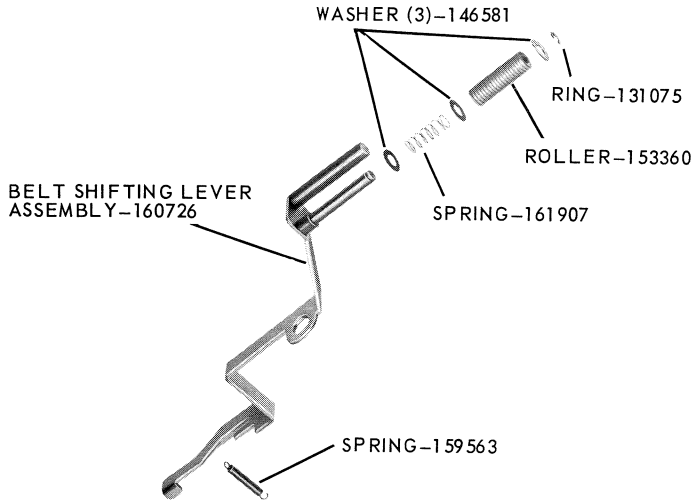

FIGURE 33 TYPE IV

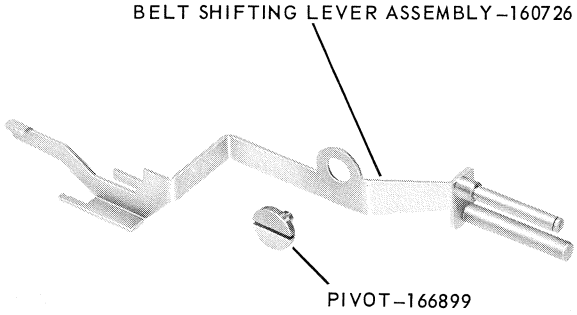

FIGURE 34

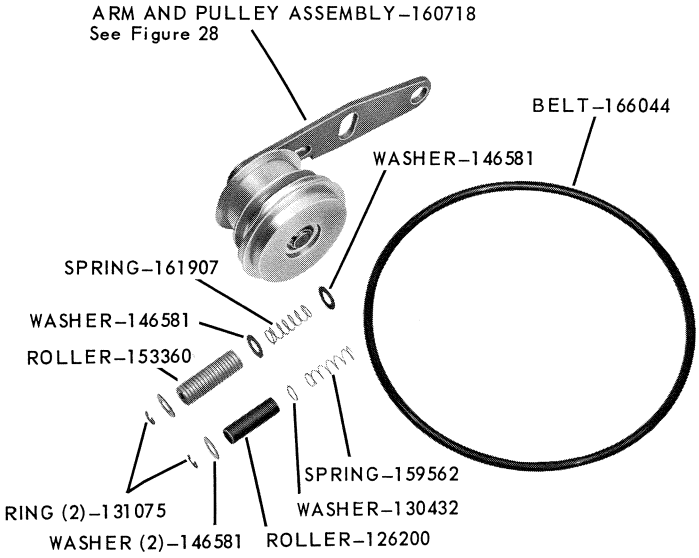

FIGURE 35 KIT NO. K-1655–SHUTTER DRIVE BELT AND SHIFTING ROLLER KIT

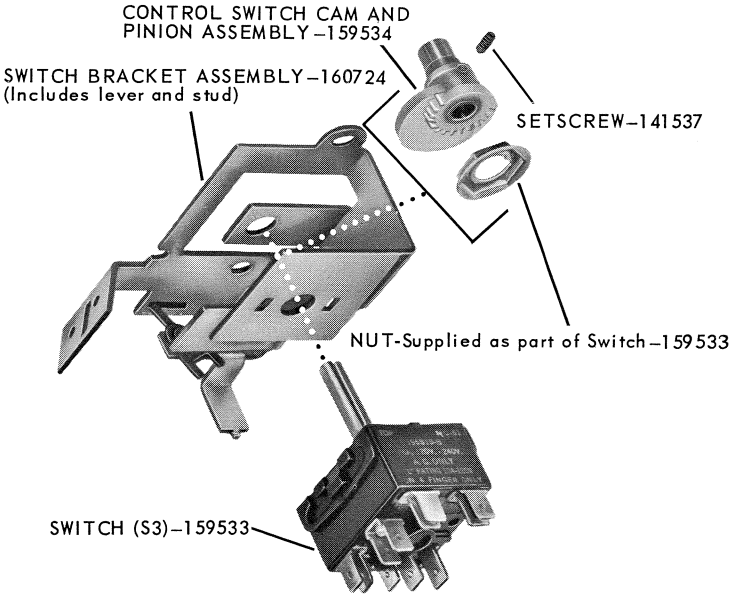

FIGURE 36

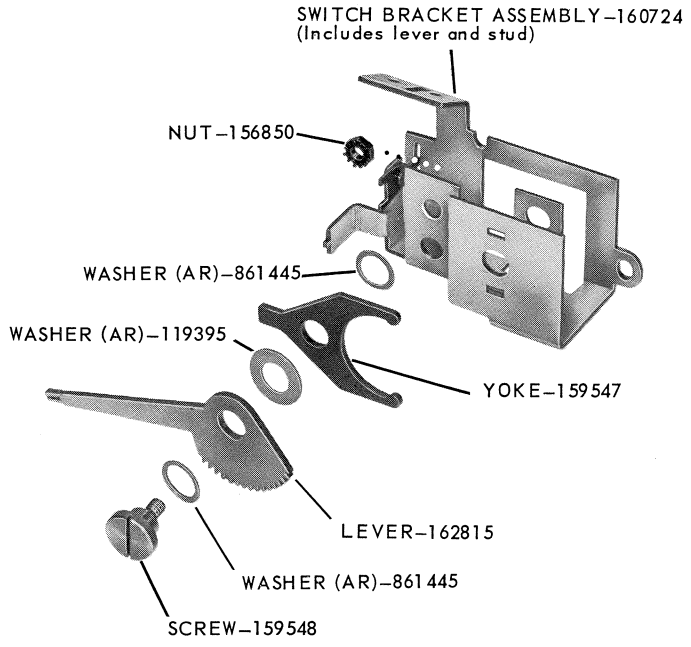

FIGURE 37

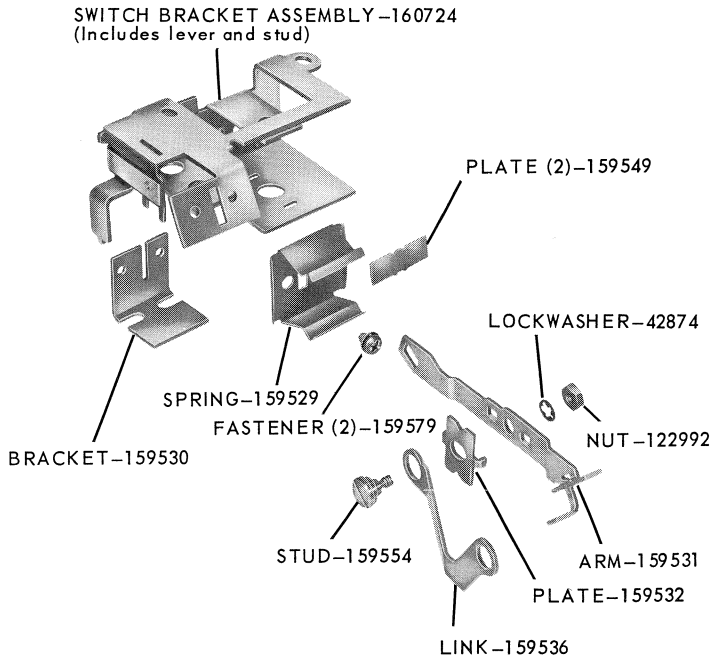

FIGURE 38

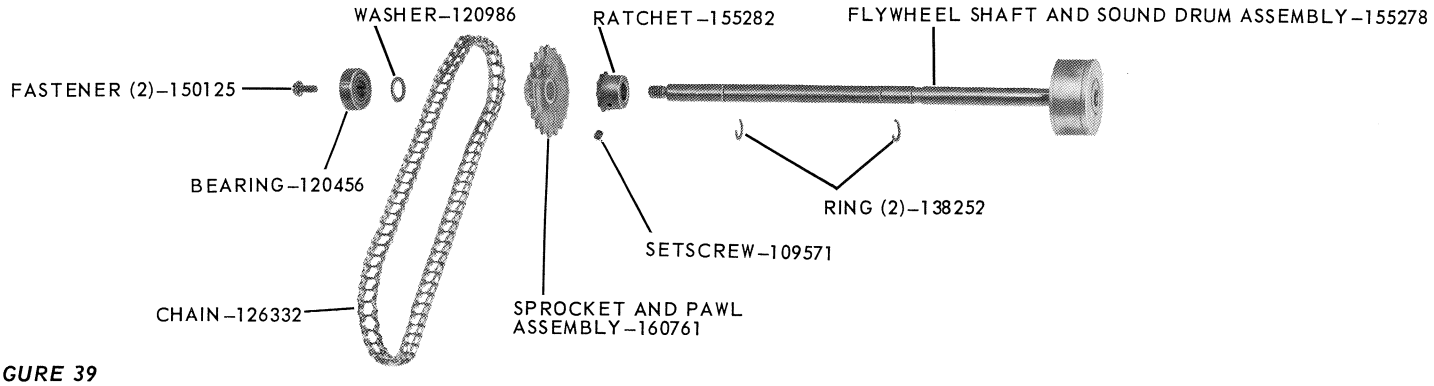

FIGURE 39

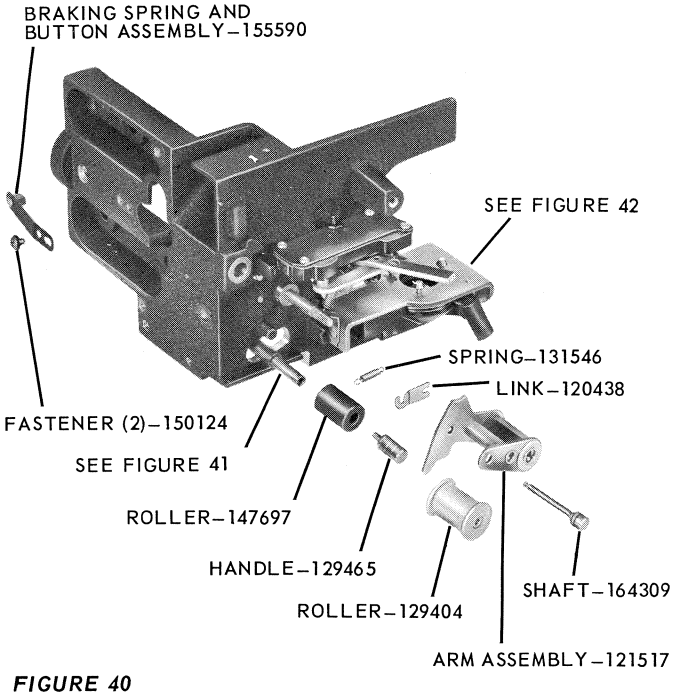

FIGURE 40

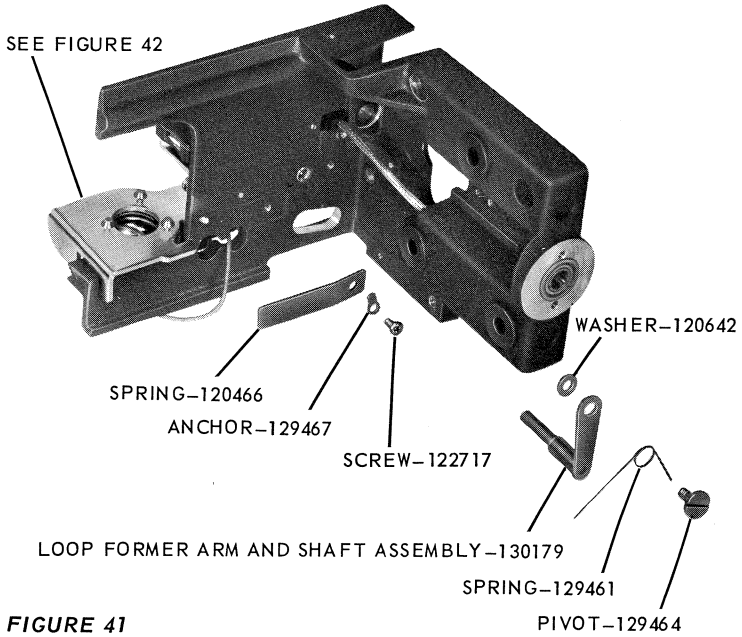

FIGURE 41

Always give PART NUMBER and NAME when ordering parts

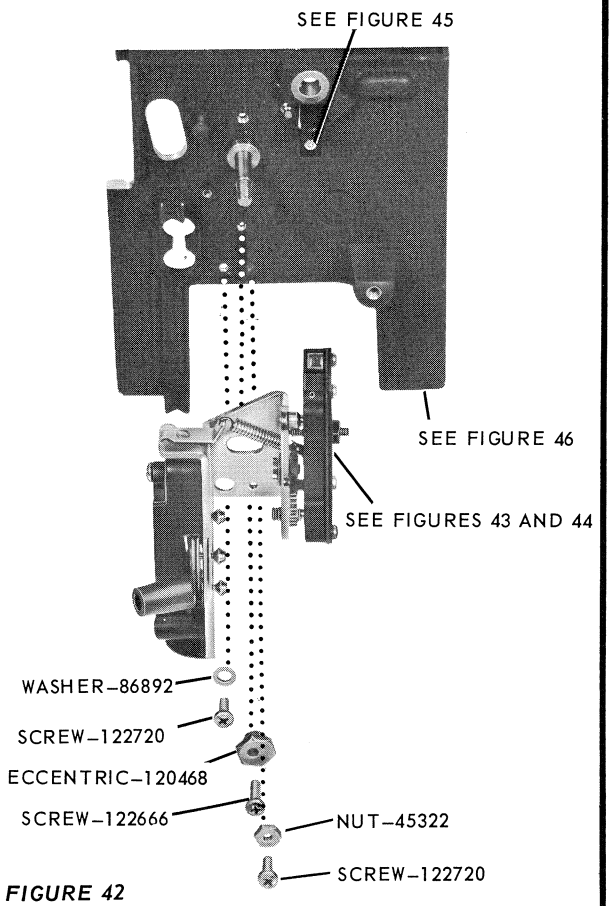

FIGURE 42

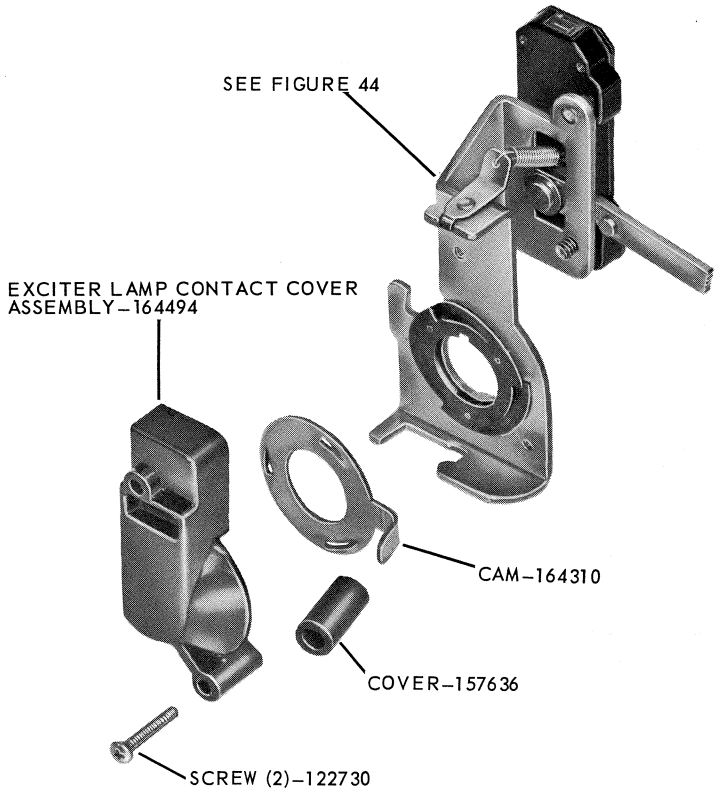

FIGURE 43

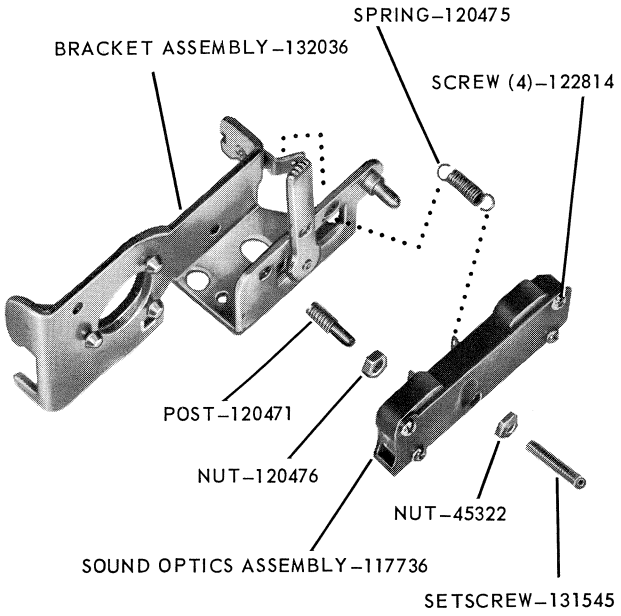

FIGURE 44

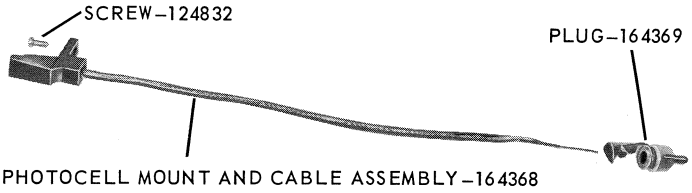

FIGURE 45

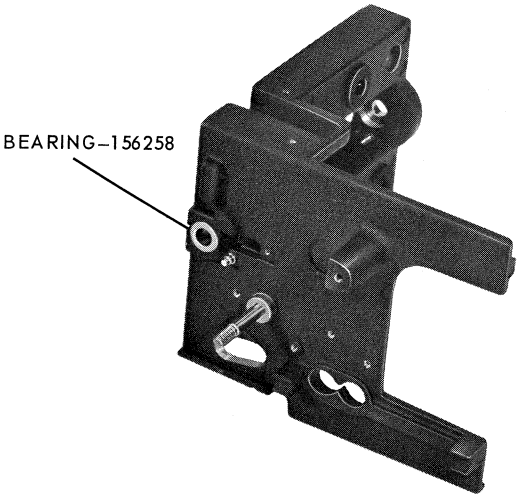

FIGURE 46 *SOUND HEAD BRACKET ASSEMBLY–160392*
(Includes bearing, shaft, and stud)

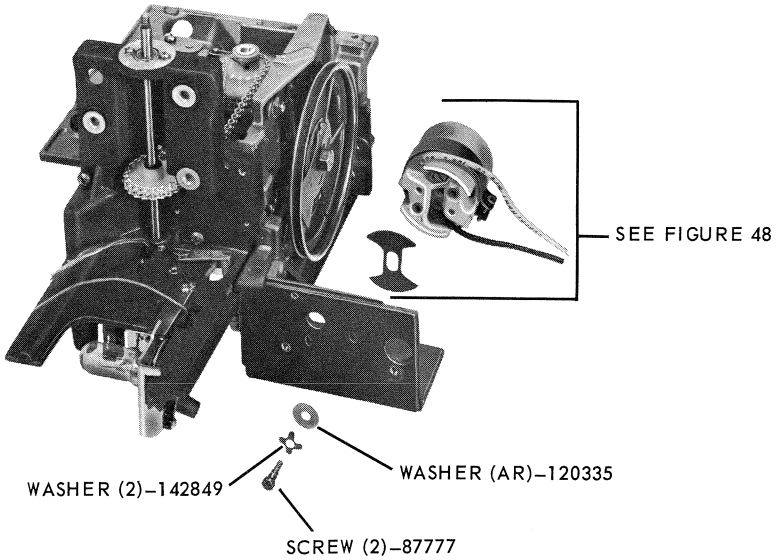

FIGURE 47

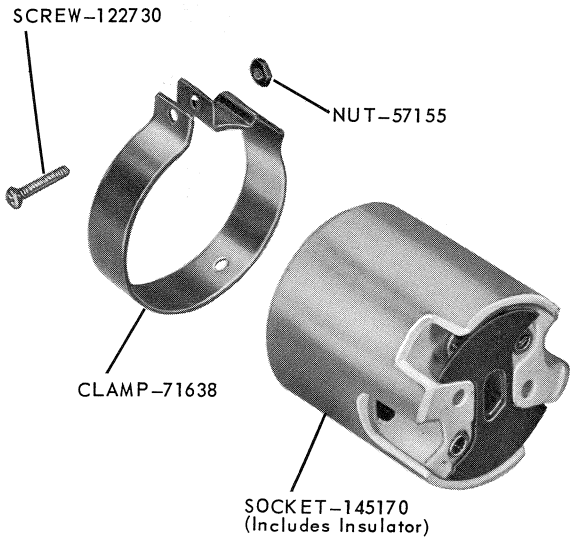

FIGURE 48

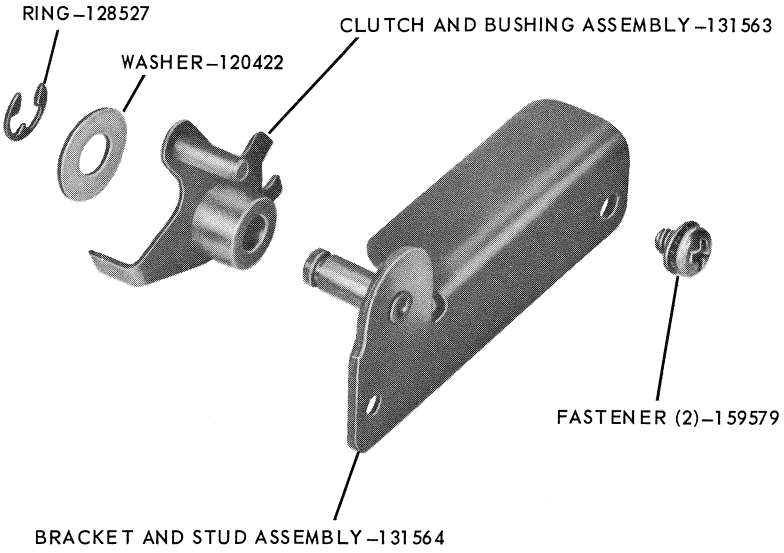

FIGURE 49

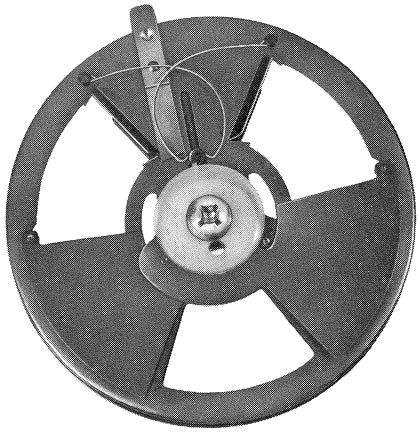

FIGURE 50 ***SHUTTER ASSEMBLY–134124***
See Figure 51

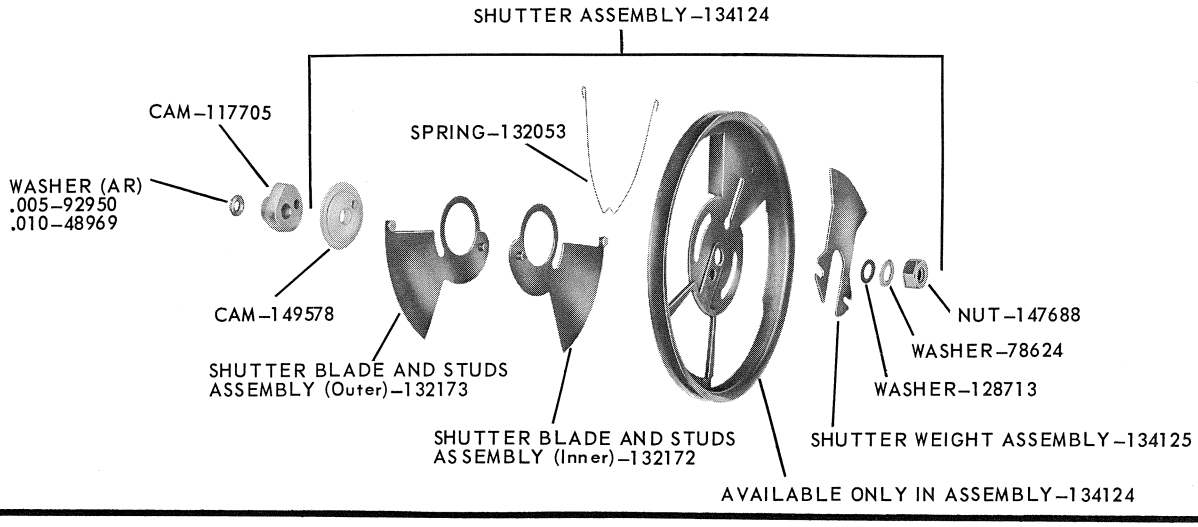

FIGURE 51

Always give PART NUMBER and NAME when ordering parts

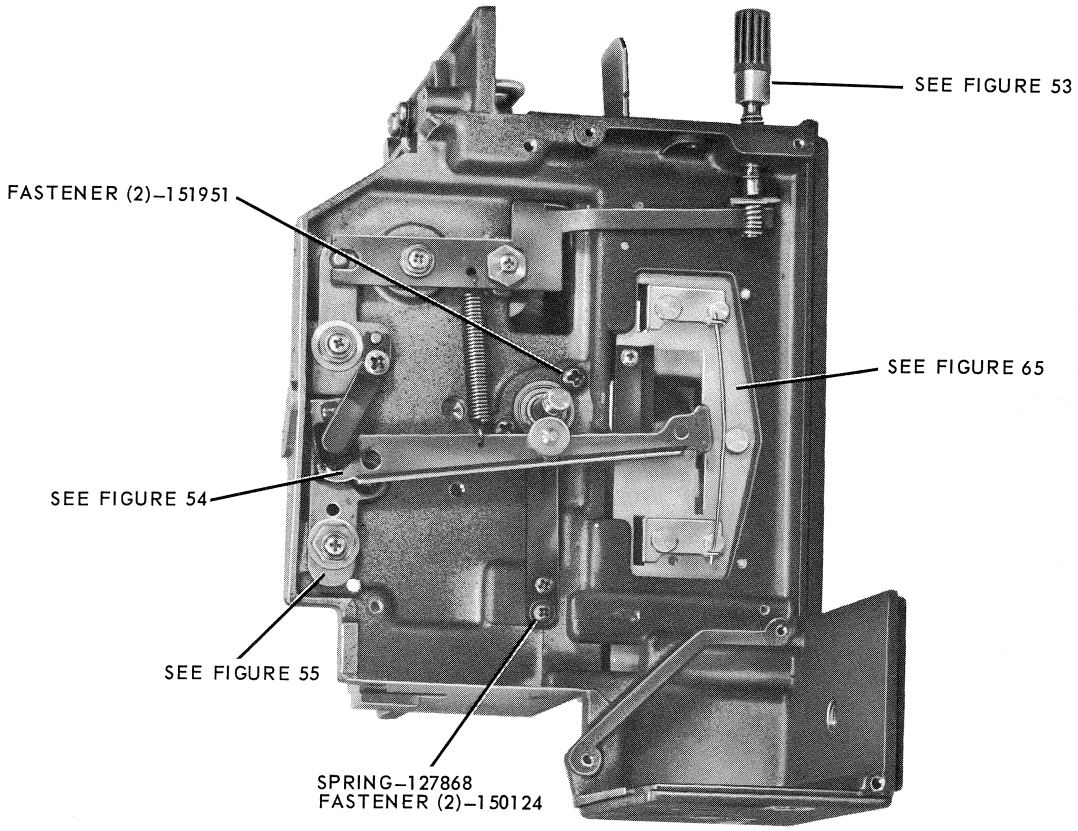

FIGURE 52

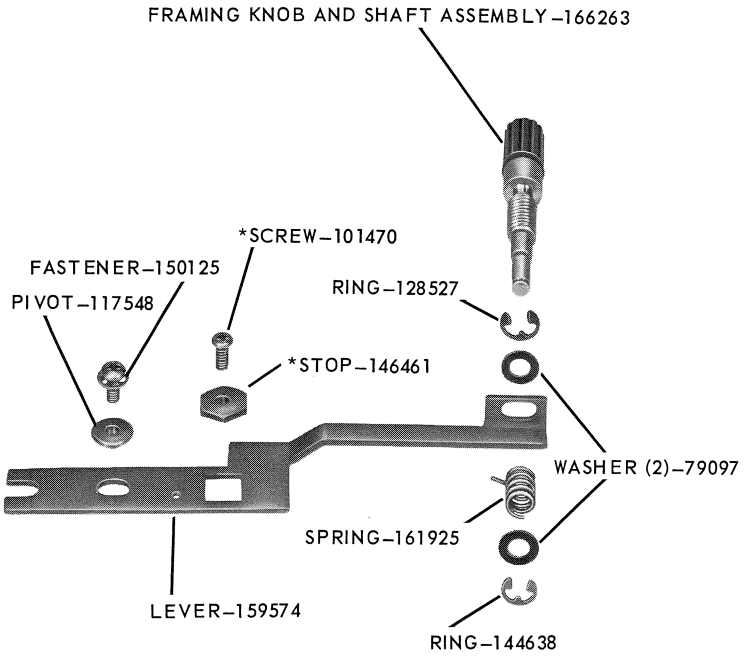

*For Early Model Projectors

FIGURE 53

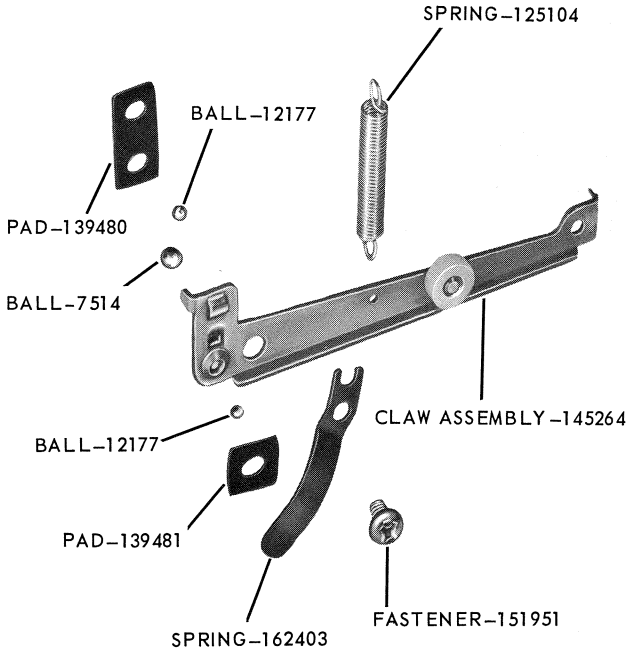

FIGURE 54

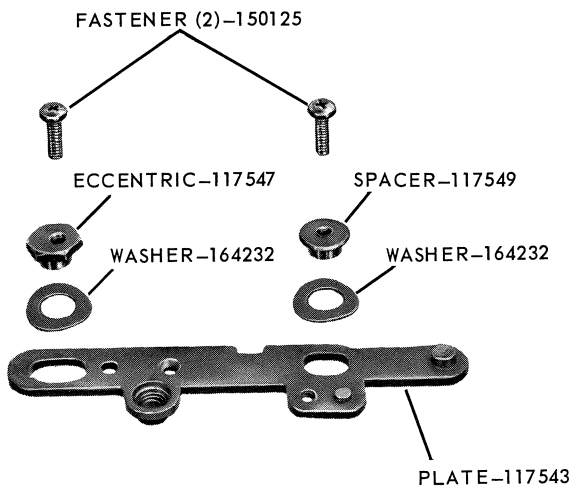

FIGURE 55

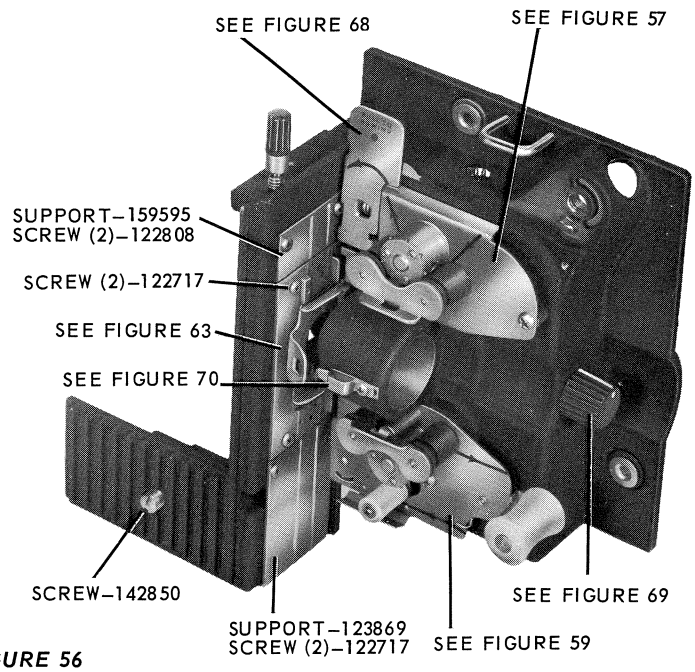

FIGURE 56

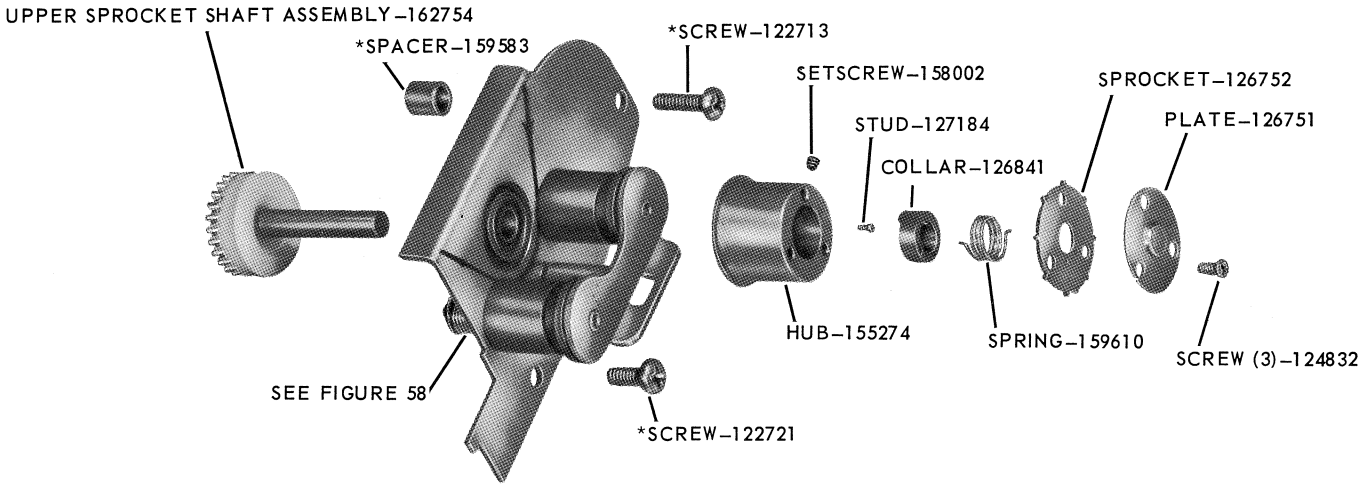

FIGURE 57 UPPER SPROCKET PLATE ASSEMBLY–160720

*Attaching parts. Not included in Assembly–160720

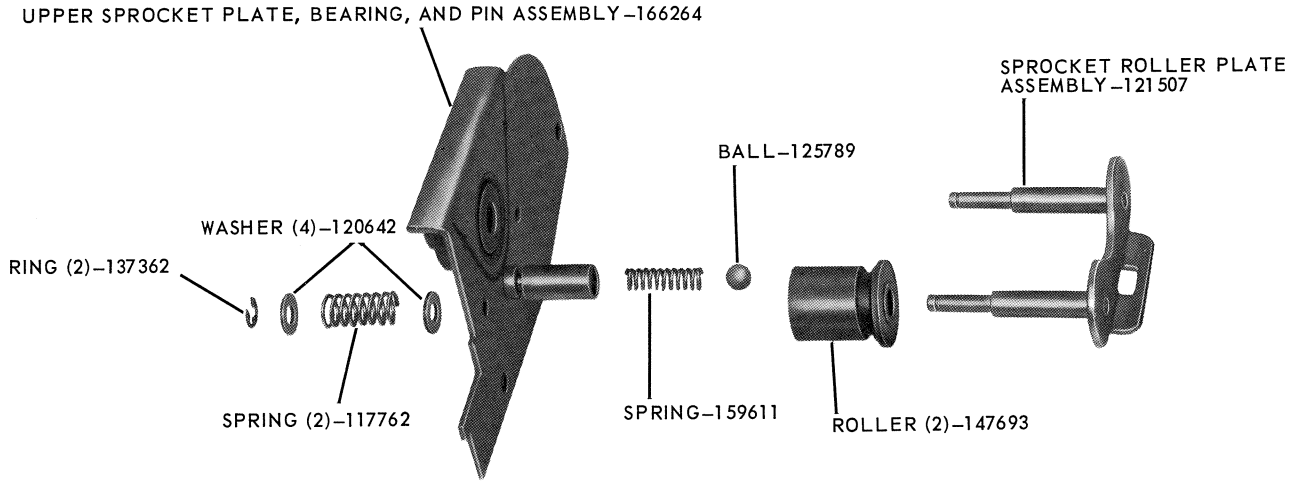

FIGURE 58

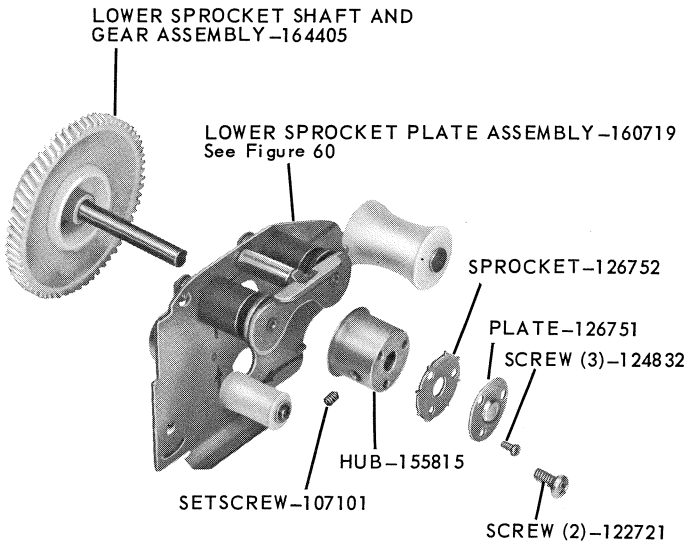

FIGURE 59

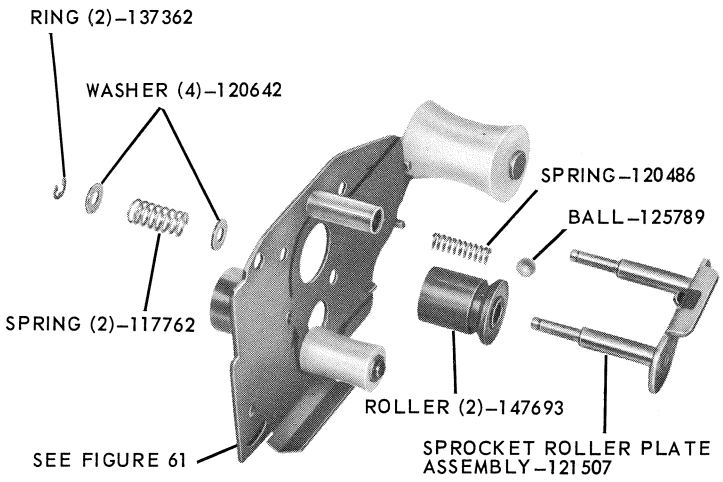

FIGURE 60 LOWER SPROCKET PLATE ASSEMBLY–160719

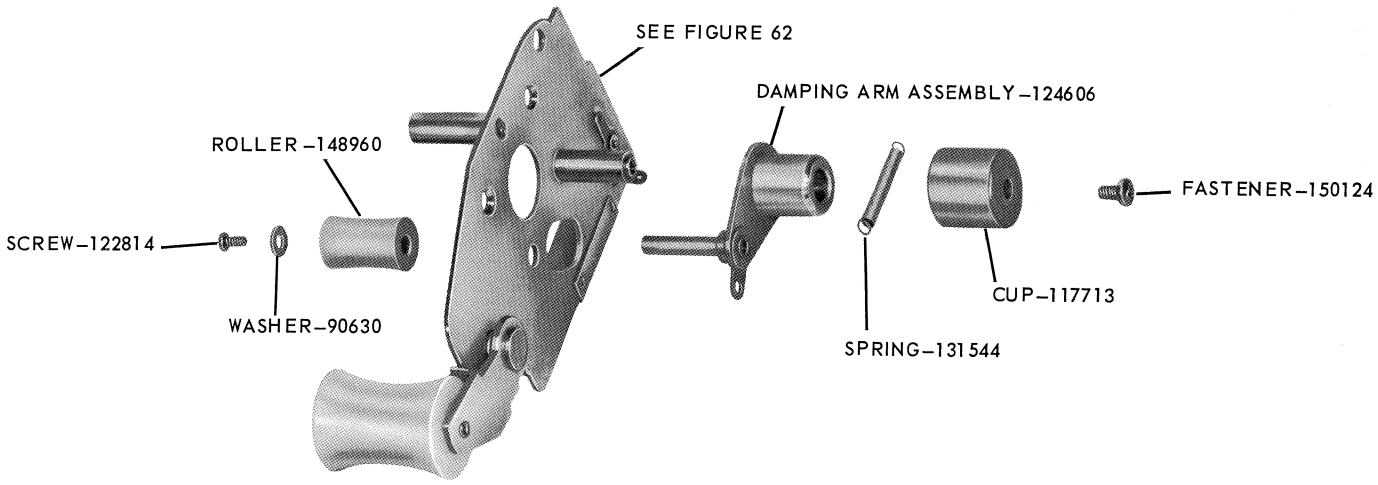

FIGURE 61

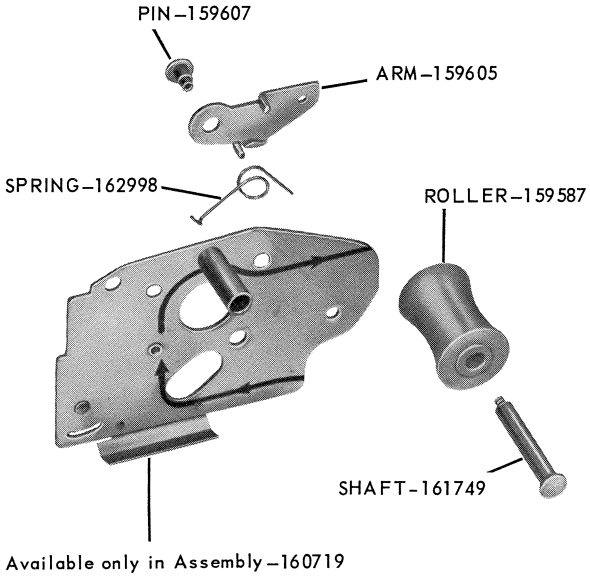

FIGURE 62

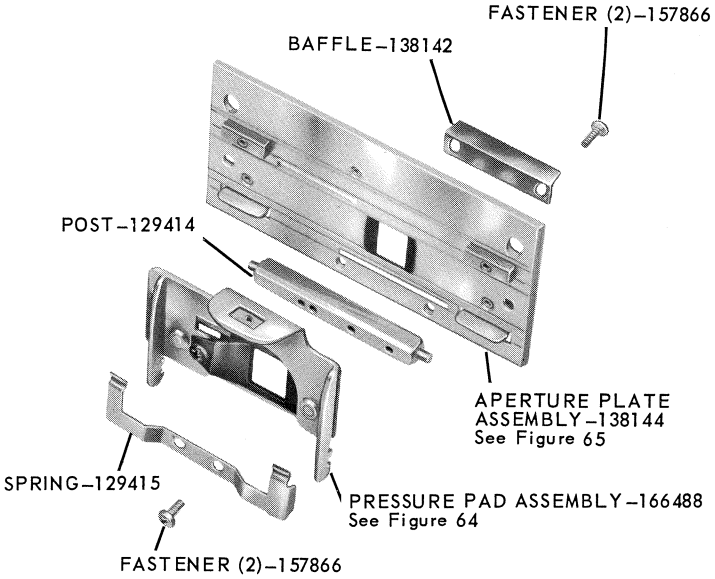

FIGURE 63 APERTURE PLATE AND PAD ASSEMBLY–166489

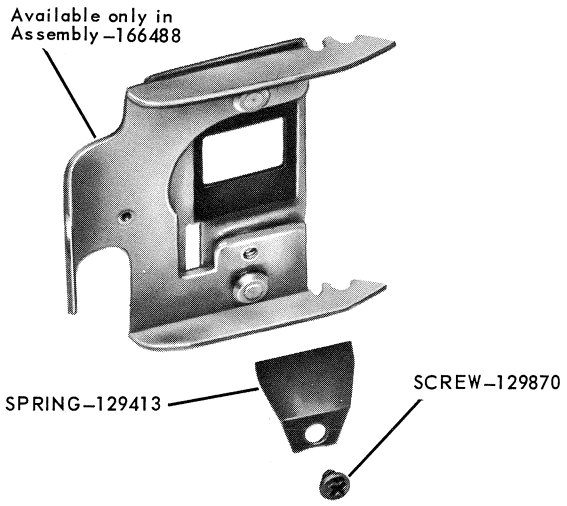

FIGURE 64 PRESSURE PAD ASSEMBLY–166488

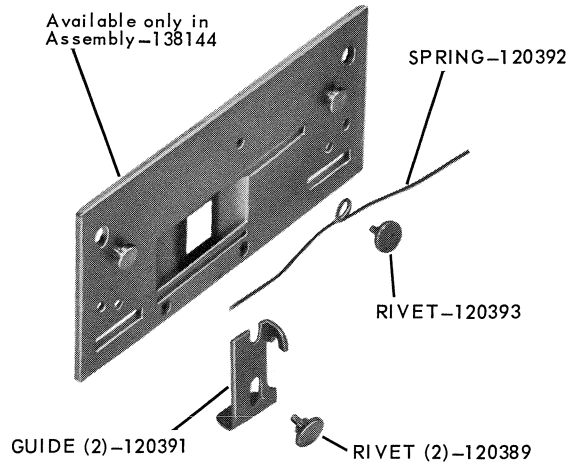

FIGURE 65 APERTURE PLATE ASSEMBLY–138144

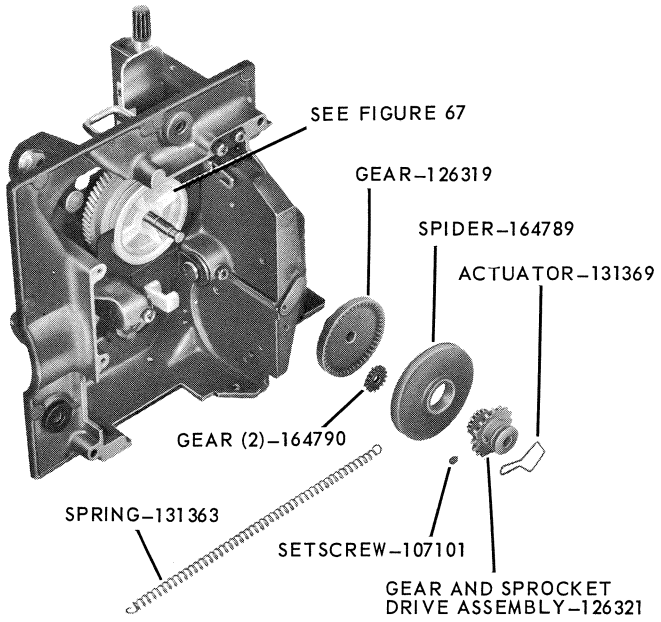

FIGURE 66

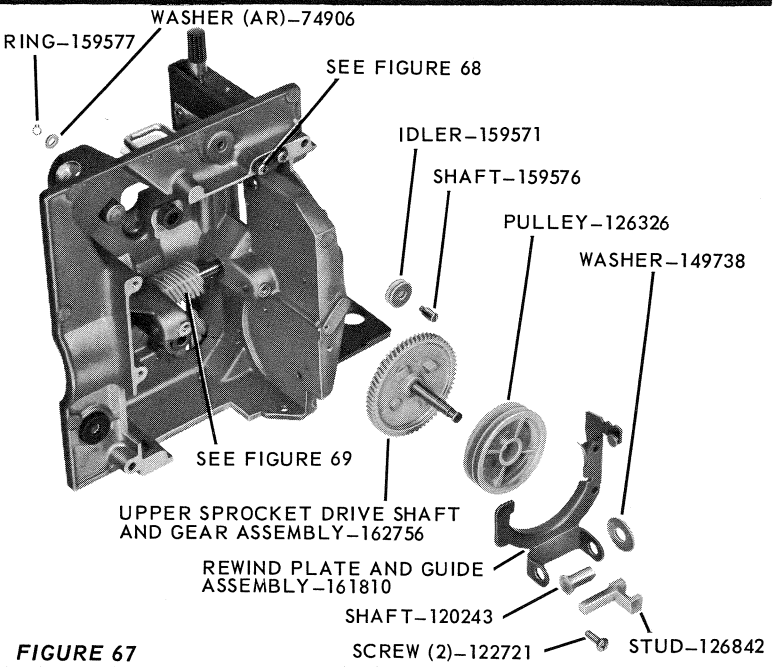

FIGURE 67

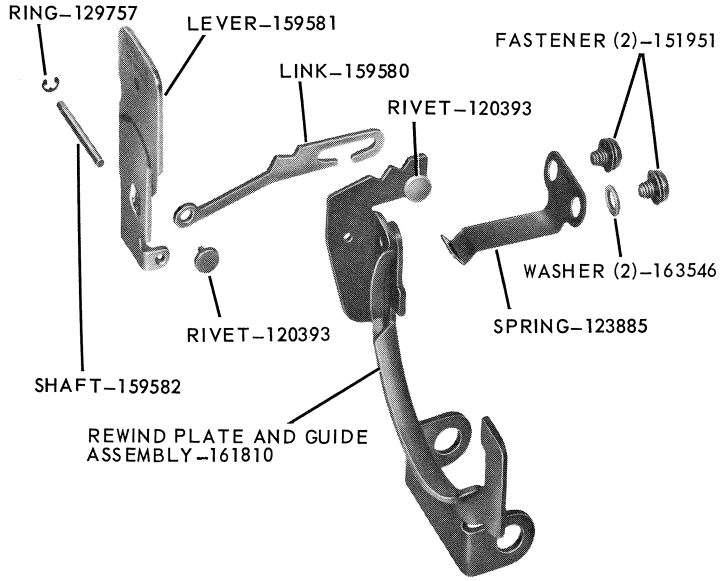

FIGURE 68

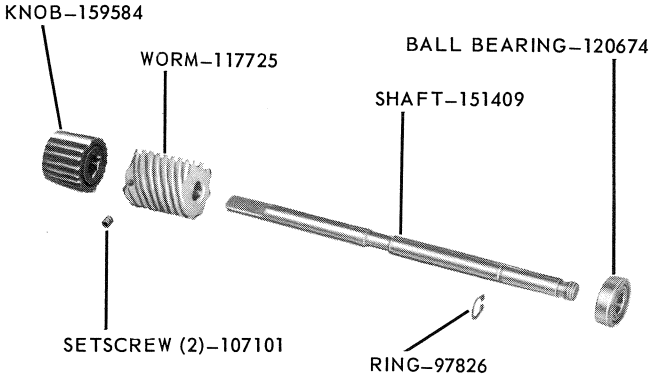

FIGURE 69

Always give PART NUMBER and NAME when ordering parts

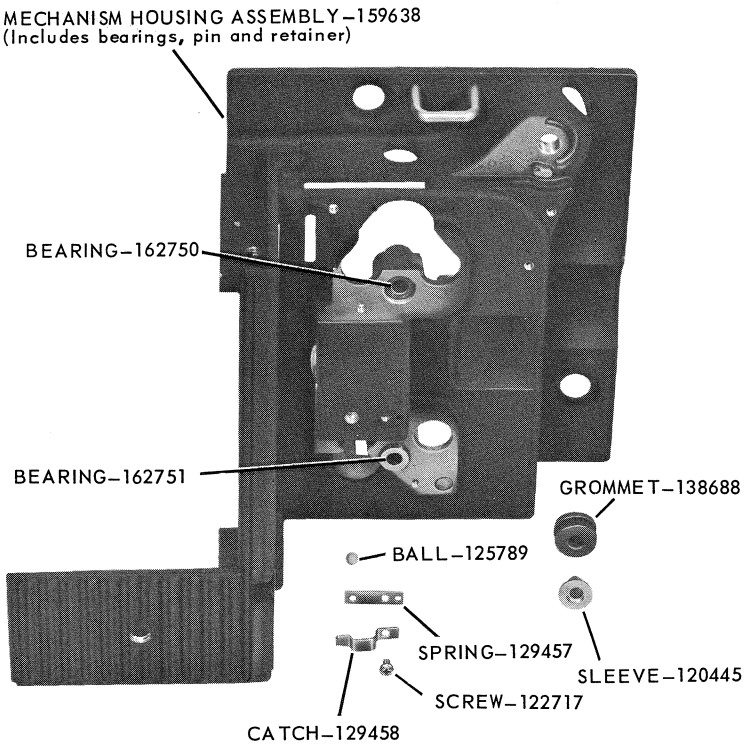

FIGURE 70

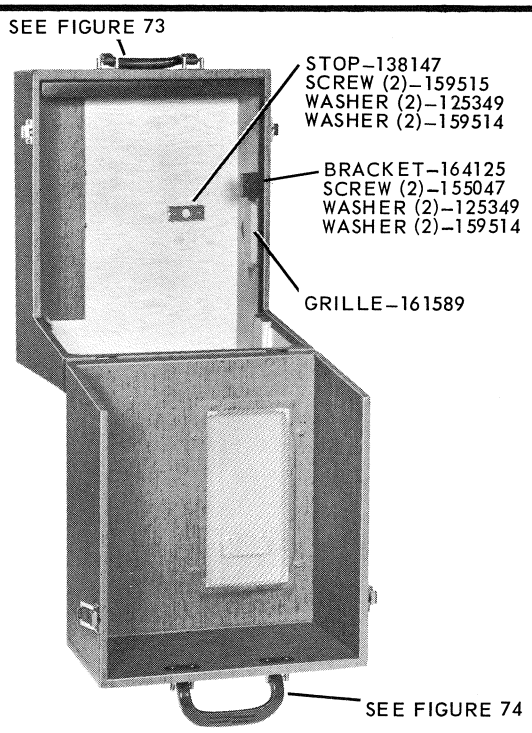

FIGURE 72 CASE ASSEMBLY–161911

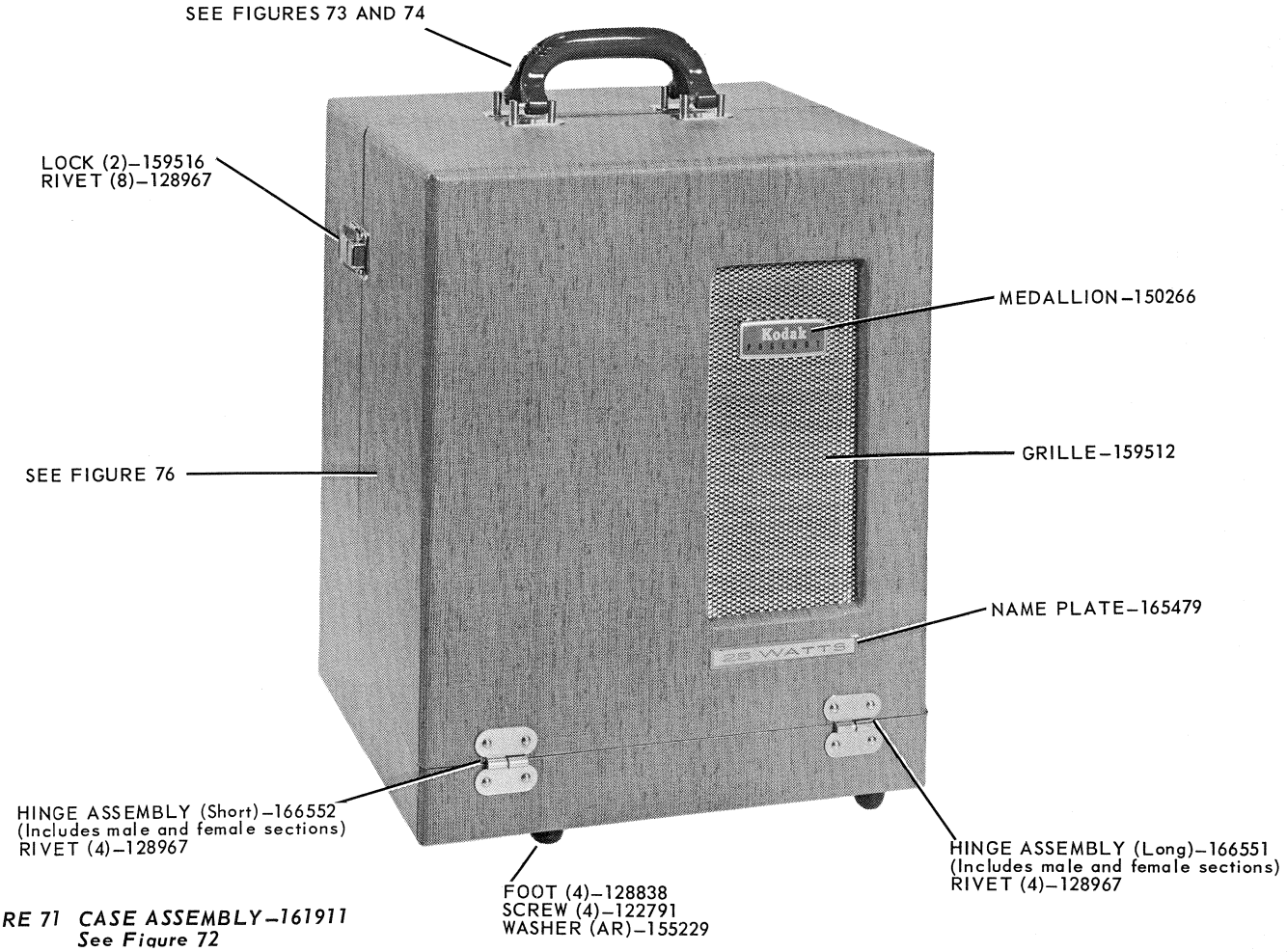

FIGURE 71 CASE ASSEMBLY–161911
See Figure 72

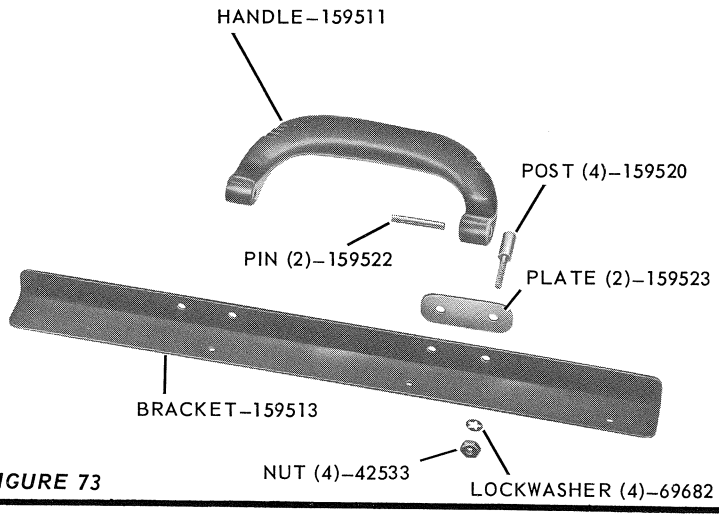

FIGURE 73

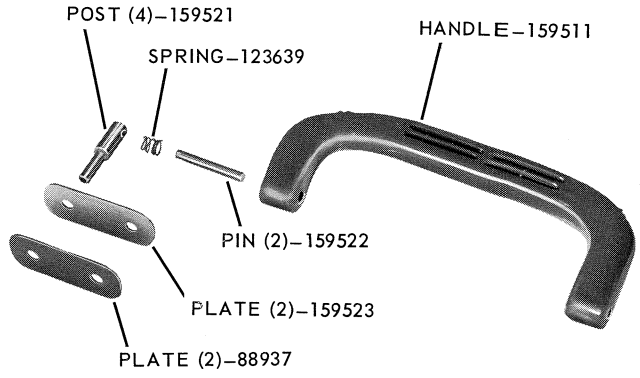

FIGURE 74

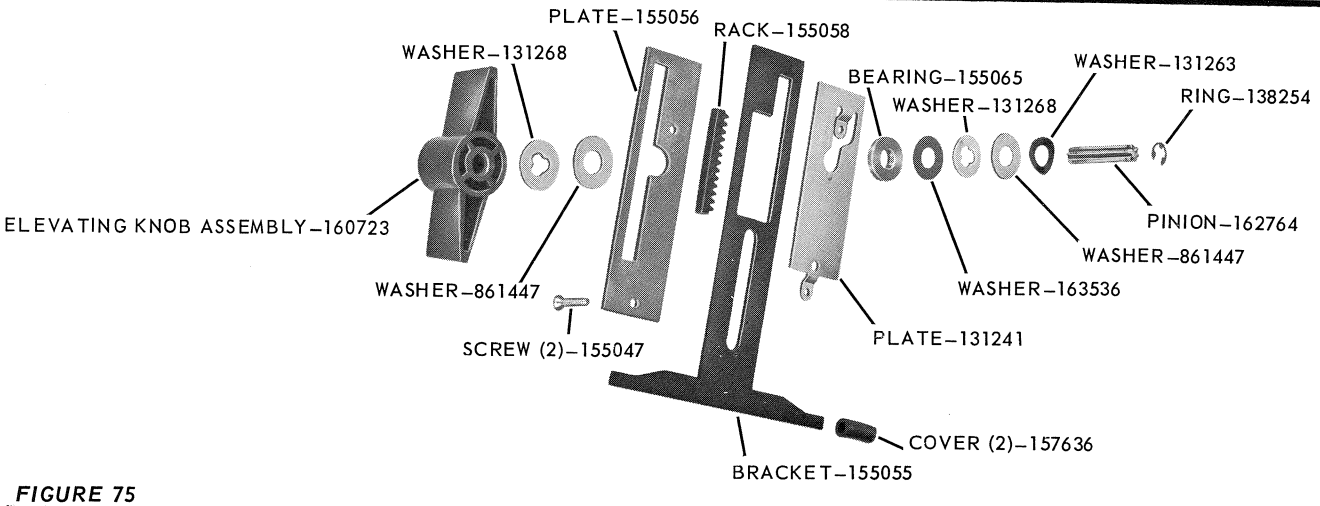

FIGURE 75

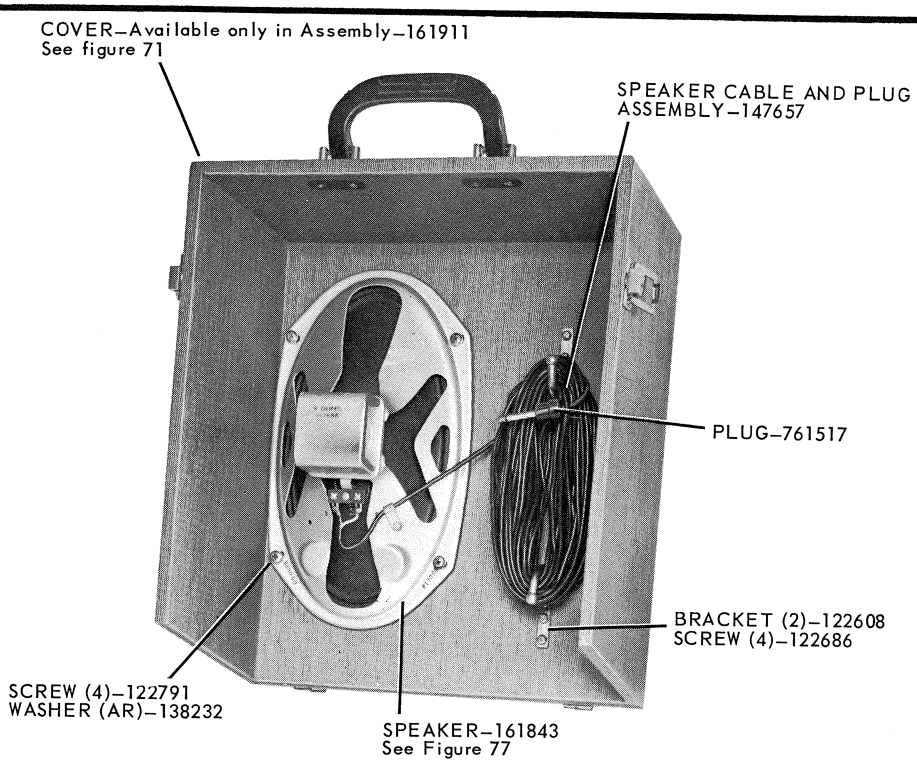

FIGURE 76

Always give PART NUMBER and NAME when ordering parts

IMPORTANT

Cable shield must always be connected to speaker terminal No. 1. The location of the No. 1 and No. 2 speaker terminals may be reversed from those shown.

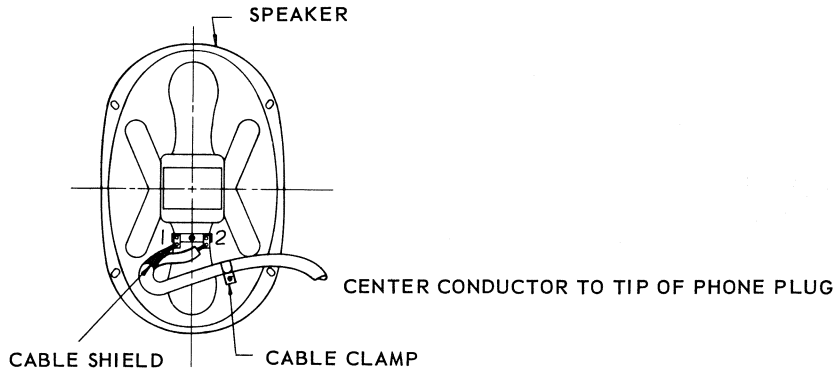

HOW TO DETERMINE NO. 1 SPEAKER TERMINAL

If the cone moves forward when a flashlight cell is placed across the speaker terminals, the terminal connected to the positive pole of the cell is the No. 1 speaker terminal.

FIGURE 77 SPEAKER WIRING DIAGRAM (October 1962)

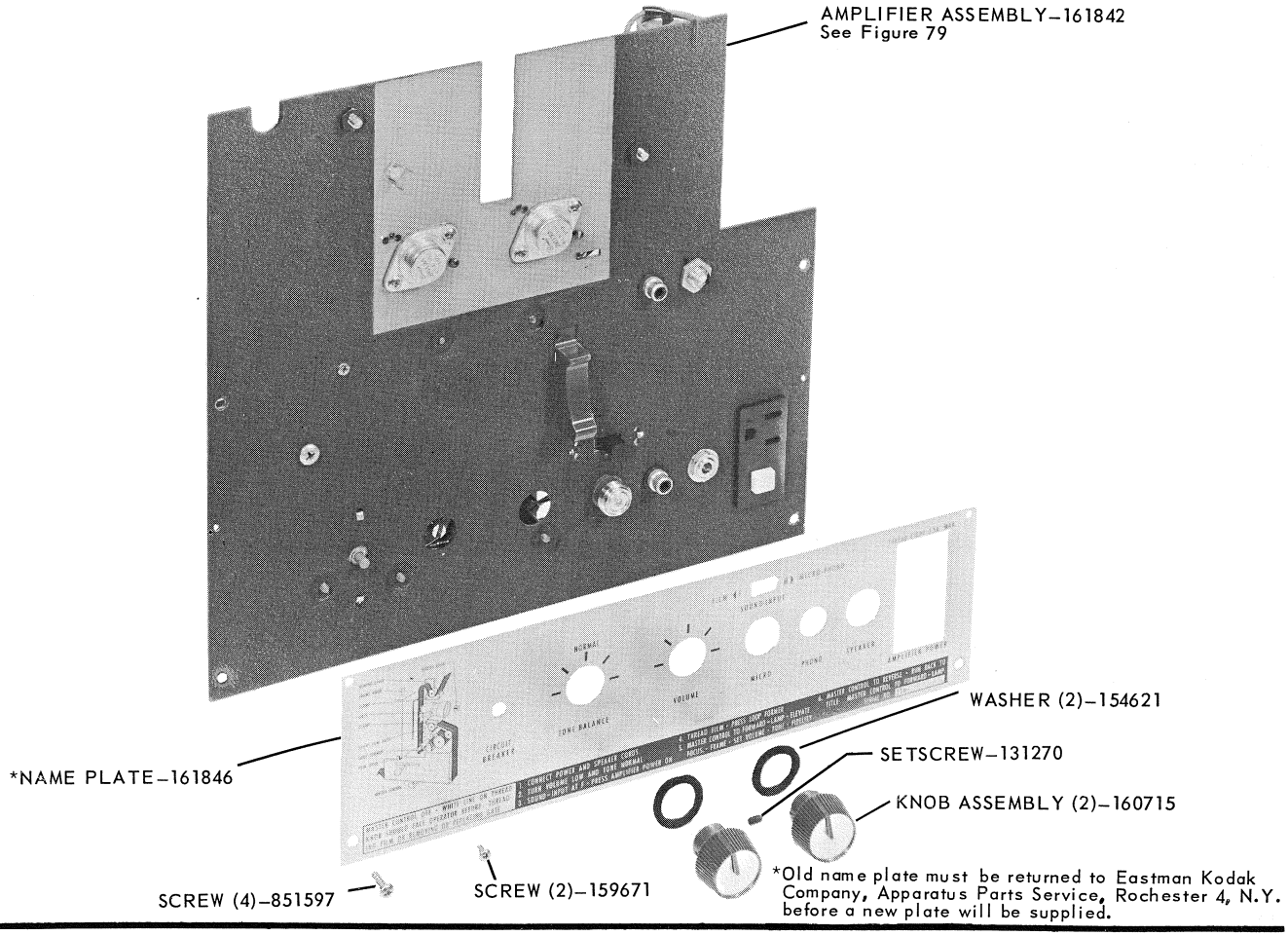

FIGURE 78

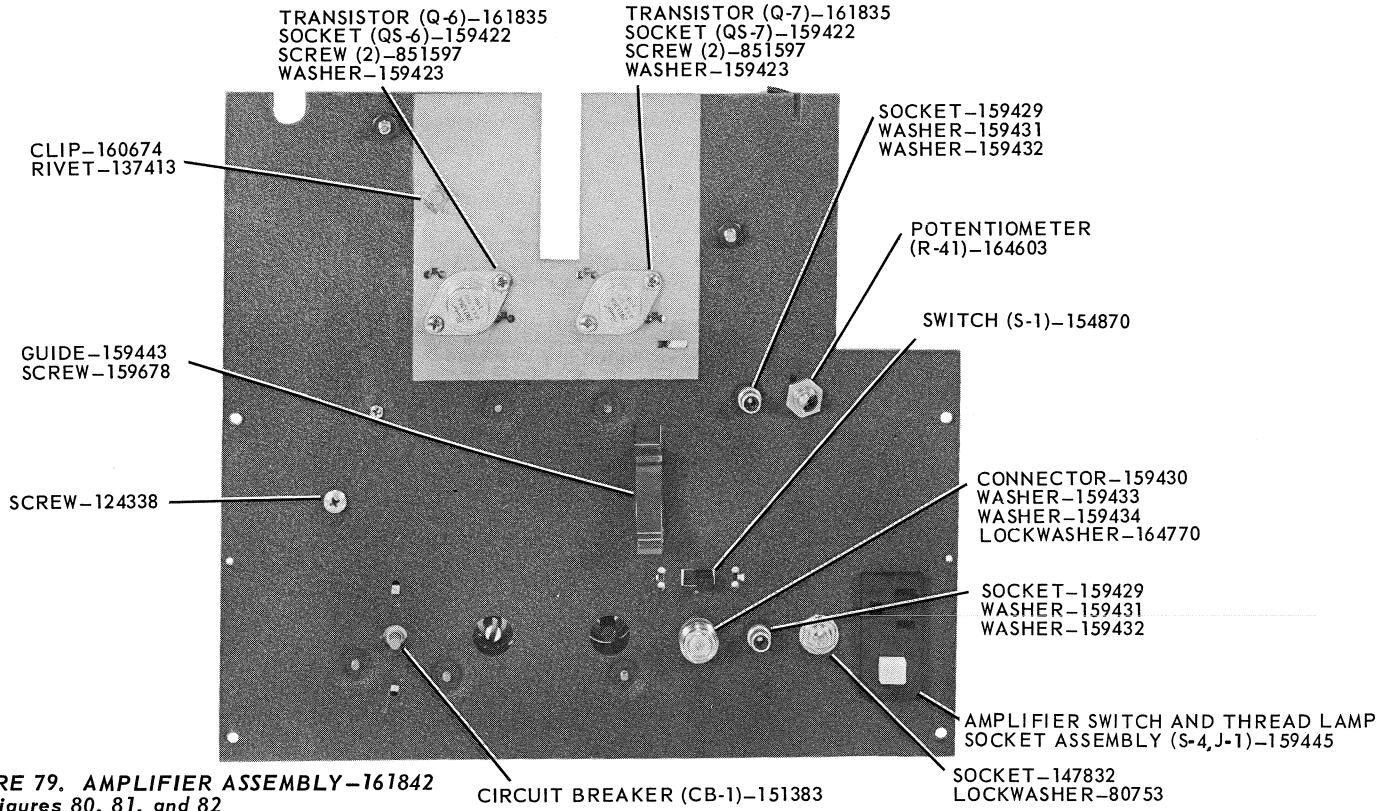

FIGURE 79. AMPLIFIER ASSEMBLY–161842
See Figures 80, 81, and 82

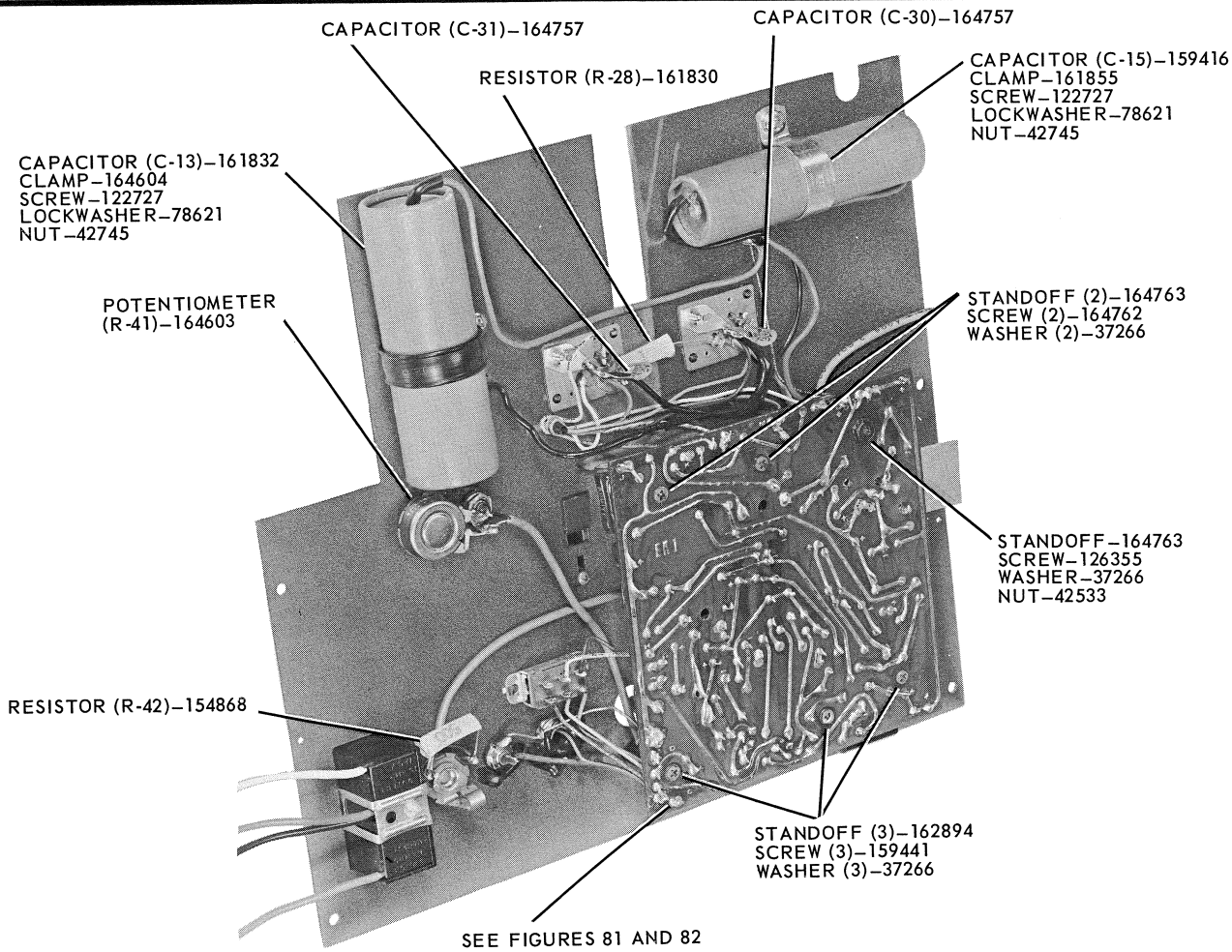

FIGURE 80

FIGURE 81

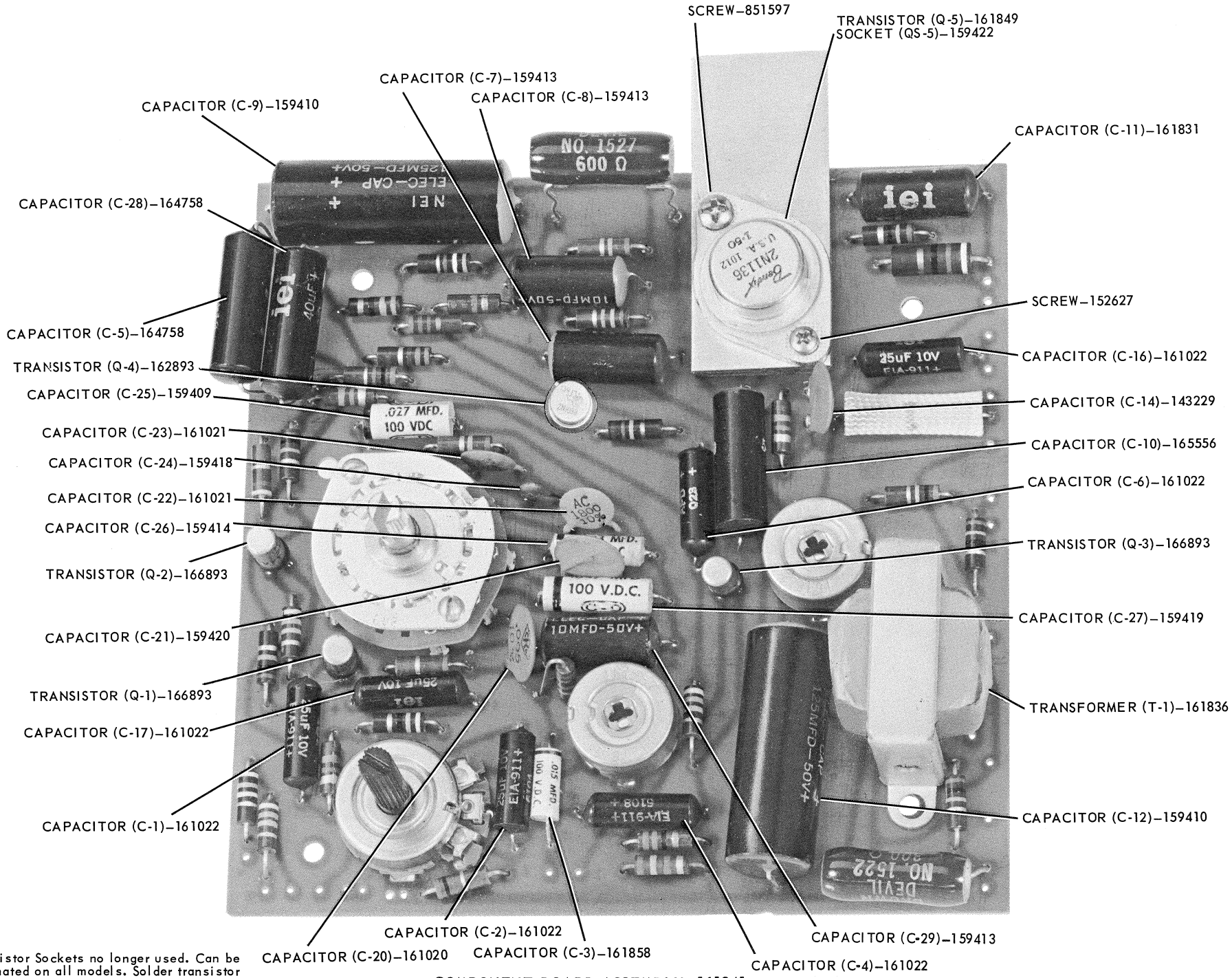

Transistor Sockets no longer used. Can be eliminated on all models. Solder transistor leads to component board.

COMPONENT BOARD ASSEMBLY–161841

FIGURE 82

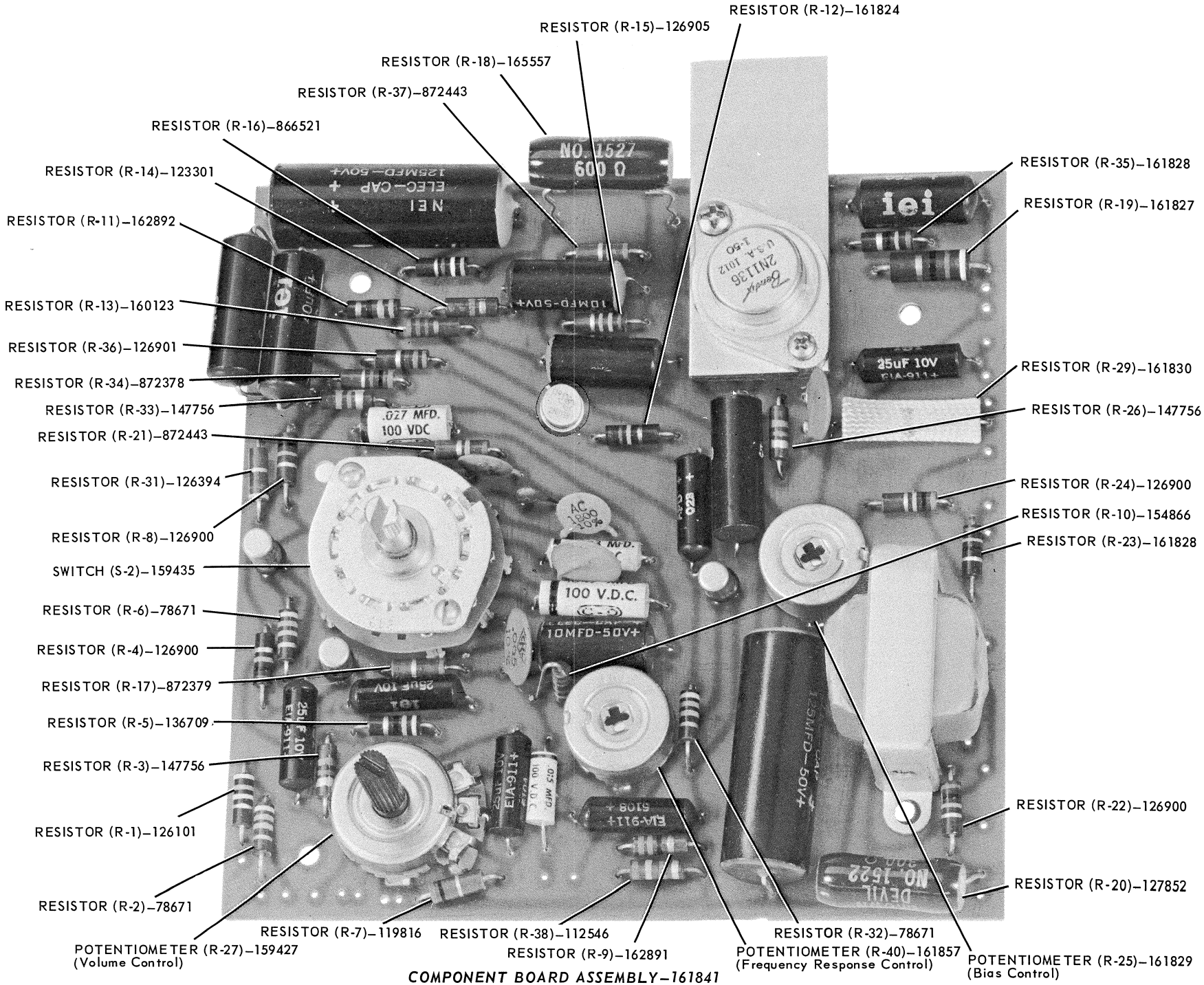

COMPONENT BOARD ASSEMBLY–161841

T2	161837	POWER TRANSFORMER
CR-1-2-3-4	164193	750 MA 200V. PIV. DIODE
R-39	154868	500 OHM ±10% 2 WATT W.W.
R-30	159633	25 OHM ±10% 25 WATT W.W.
C-18 AND 19	159634	1300 MFD 35 V.D.C. ELEC.

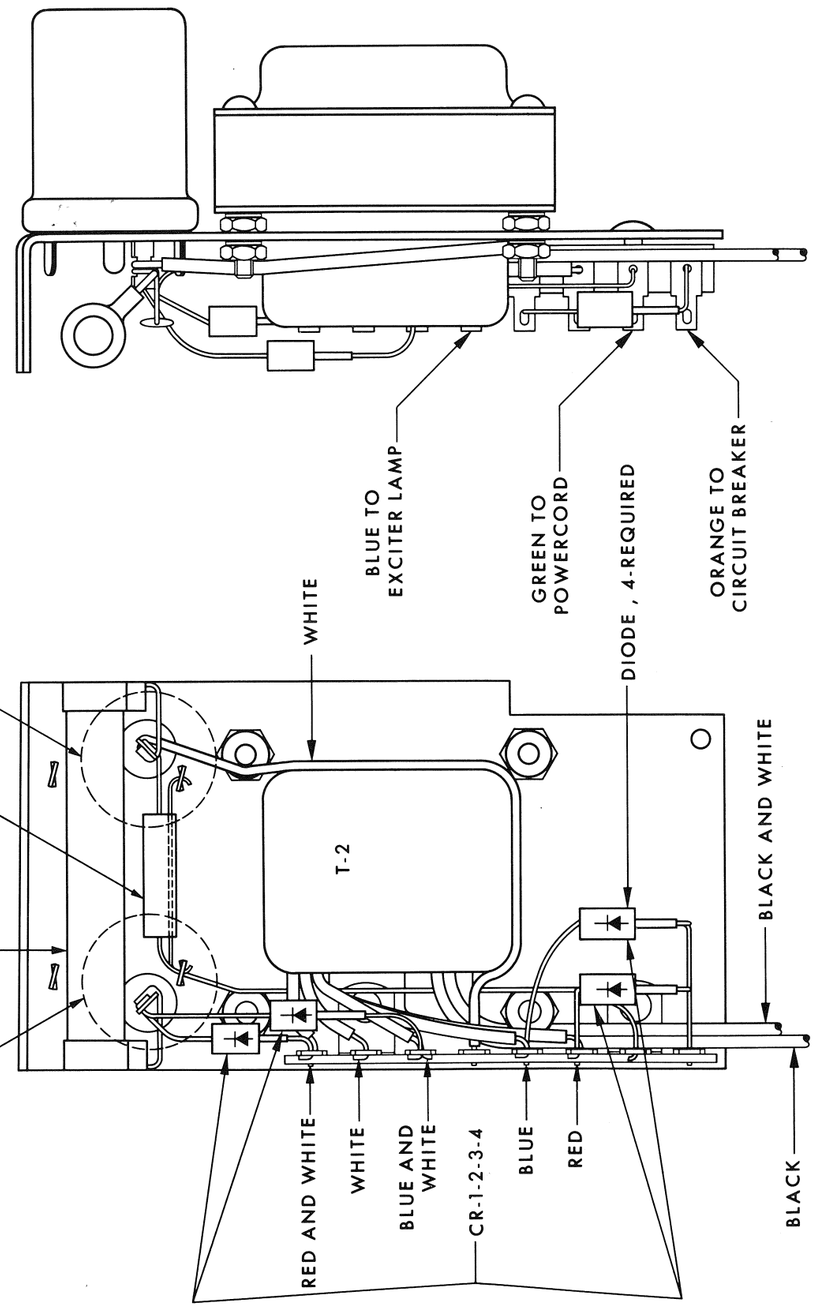

FIGURE 83

WIRING DIAGRAM FOR AMPLIFIER AND EXCITER LAMP POWER SUPPLY ASSEMBLY–161845 (January 1963)

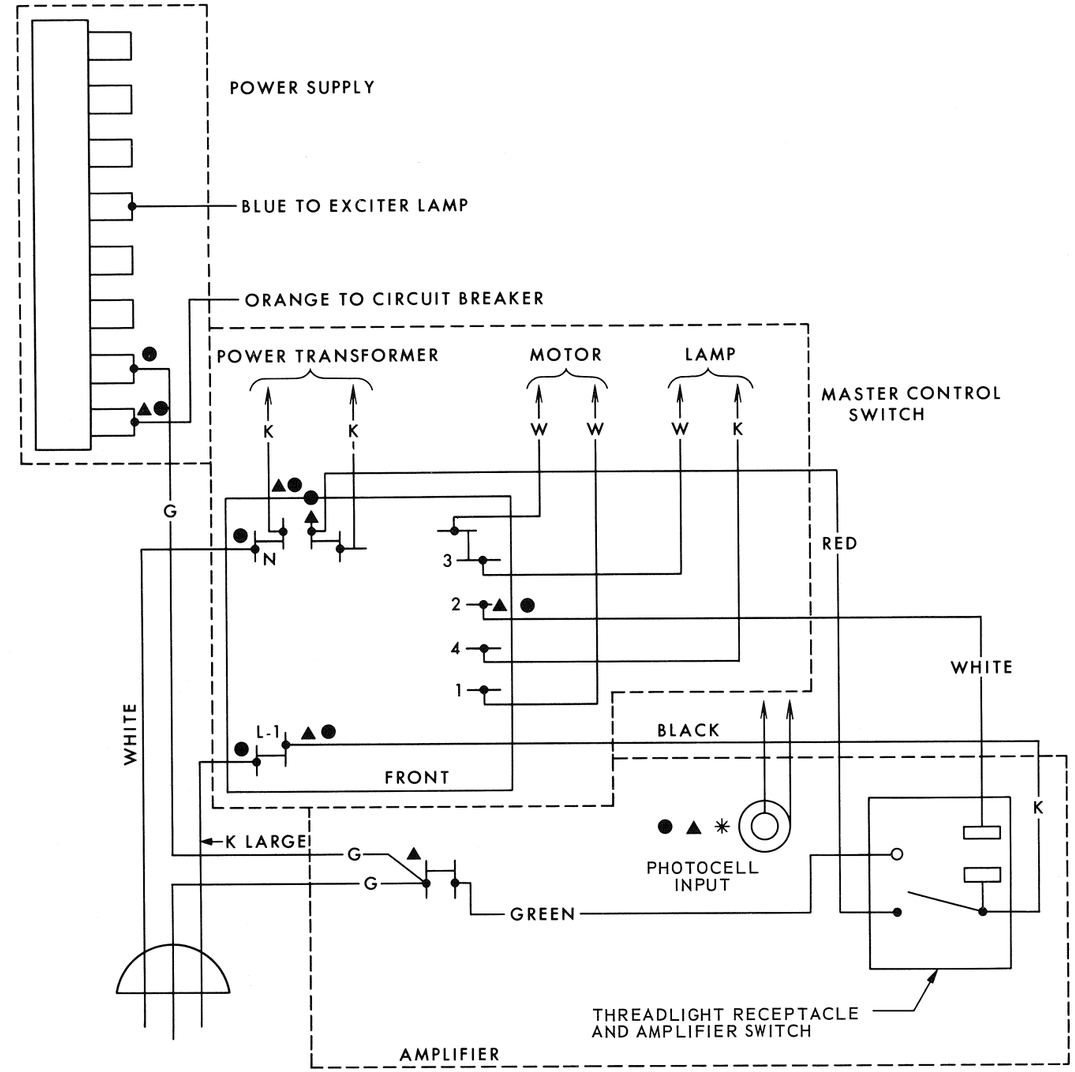

✱ DISCONNECT TO REMOVE AMPLIFIER (AMPLIFIER WILL STILL OPERATE)
▲ DISCONNECT TO REMOVE AMPLIFIER COMPLETELY
● DISCONNECT TO REMOVE MECHANISM

SWITCH AND TERMINAL CONNECTIONS

FIGURE 84

C-13	161832	Capacitor - Made to Kodak specifications
C-15	159416	Capacitor - Made to Kodak specifications
CB-1	151383	Breaker - Circuit, 1.125 amp operating, 2.0 amp break
Q6, Q7	161835	Transistors – PNP, 2N1136A
R-28	161830	Resistor – W.W., 1Ω5%, 2 W
R-41	164603	Potentiometer – Linear taper, 25 KΩ 30%, Stackpole Carbon No. LW or equiv
R-42	154868	Resistor – W.W., 500 Ω 10%, 2 W
S-1	154870	Switch – Imput selector
S-4, J-1	159445	Amplifier Switch and Thread Lamp Socket Assembly

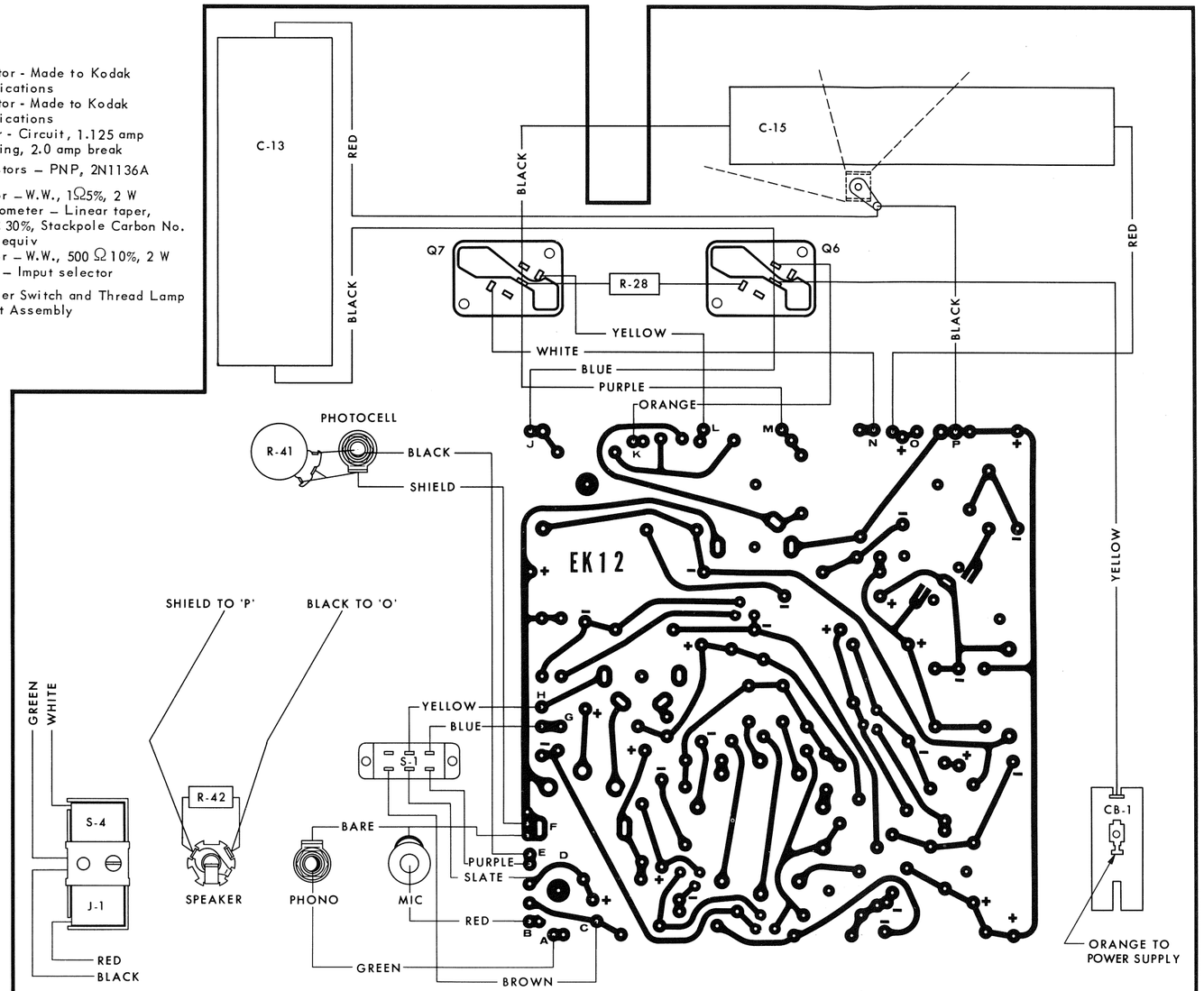

AMPLIFIER WIRING DIAGRAM FOR PAGEANT SOUND PROJECTOR, MODEL AV-256-TR

FIGURE 85

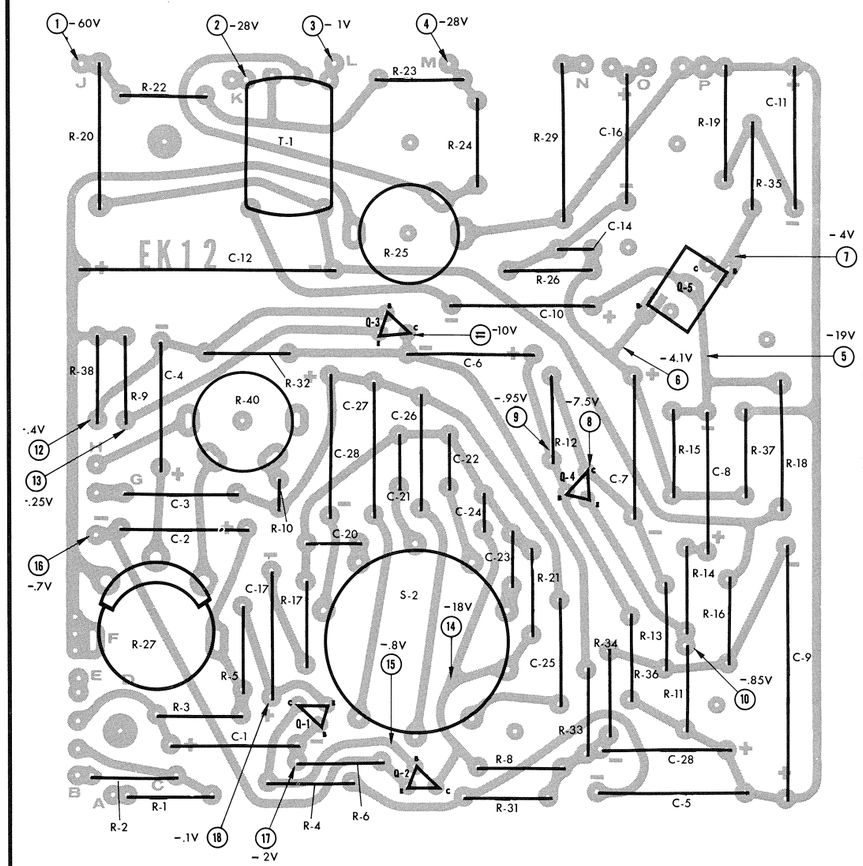

Numbers in circles refer to voltage check points

VOLTAGE-CHECK AND COMPONENT LOCATING DIAGRAM

FIGURE 86

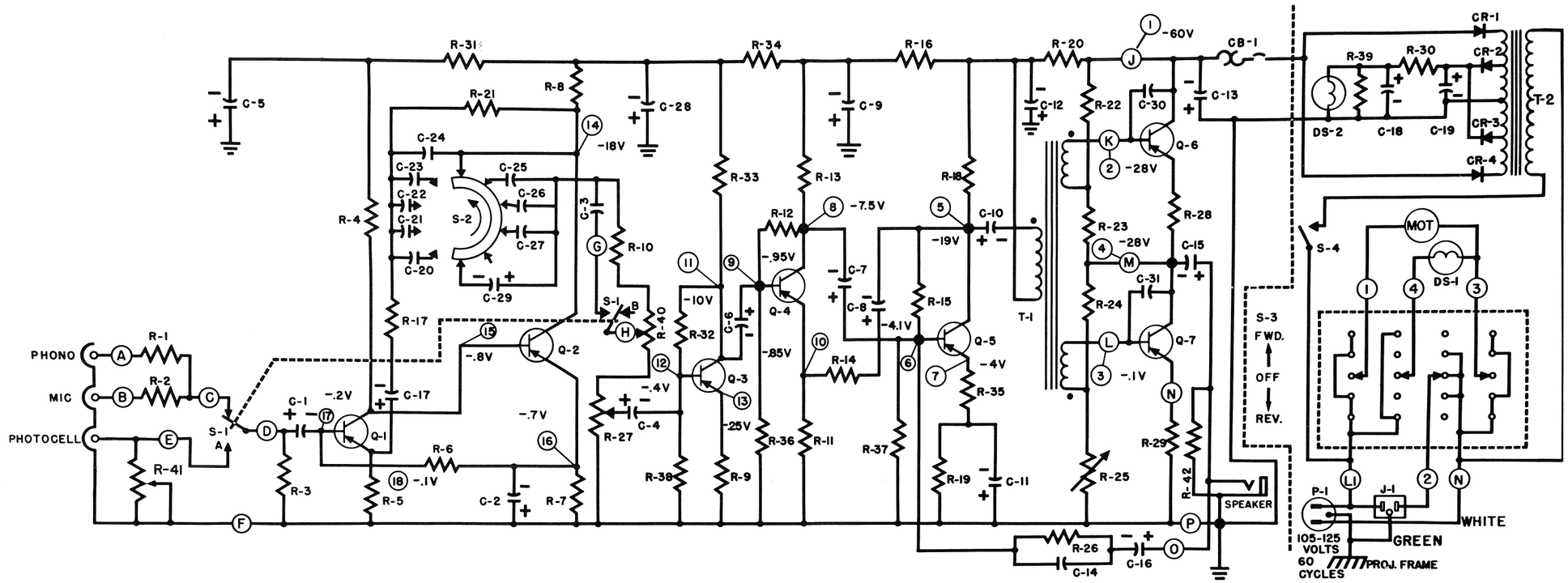

MEASURE DC VOLTAGES WITH HIGH IMPEDANCE VOLTMETER WITH NO INPUT SIGNAL, AND NO EXTERNAL LOAD

Numbers in circles refer to voltage check points

R-1	126101	470 K 1/2 WATT ±10%	*R-25	161829	BIAS CONTROL 50Ω ±20%	C-8	159413	10 MFD 50 VDC ELECTROLYTIC	CR-1	164193	750 MA 200 PIV DIODE
R-2	78671	47K 1/2 WATT ±10%	R-26	147756	1.8K 1/2 WATT ±10%	C-9	159410	125 MFD 50 VDC ELECTROLYTIC	CR-2	164193	750 MA 200 PIV DIODE
R-3	147756	1.8 K 1/2 WATT ±10%	R-27	159427	VOLUME CONTROL 5K ±30%	C-10	165556	25 MFD 50 VDC ELECTROLYTIC	CR-3	164193	750 MA 200 PIV DIODE
R-4	126900	10 K 1/2 WATT ±10%	R-28	161830	1Ω 2 WATT ±5% WIREWOUND	C-11	161831	75 MFD 6 VDC ELECTROLYTIC	CR-4	164193	750 MA 200 PIV DIODE
R-5	136709	47Ω 1/2 WATT ±10%	R-29	161830	1Ω 2 WATT ±5% WIREWOUND	C-12	159410	125MFD 50VDC ELECTROLYTIC	Q-1	166893	TRANSISTOR 2N217 OR 2N408 OR 2N1370
R-6	78671	47K 1/2 WATT ±10%	R-30	159633	25Ω 25 WATT ±10% WW	*C-13	161832	1500 MFD 70 VDC ELECTROLYTIC	Q-2	166893	TRANSISTOR 2N217 OR 2N408 OR 2N1370
R-7	119816	1K 1/2 WATT ±10%	R-31	126394	4.7K 1/2 WATT ±10%	C-14	143229	.0015 MFD ±10% 50VDC MIN. CERAMIC	Q-3	166893	TRANSISTOR 2N217 OR 2N408 OR 2N1370
R-8	126900	10K 1/2 WATT ±10%	R-32	78671	47K 1/2 WATT ±10%	*C-15	159416	1500 MFD 50VDC ELECTROLYTIC	Q-4	162893	TRANSISTOR 2N1038 PNP
R-9	162891	27Ω 1/2 WATT ±5%	R-33	147756	1.8K 1/2 WATT ±10%	C-16	161022	25 MFD 10 VDC ELECTROLYTIC	Q-5	161849	TRANSISTOR 2N1136 PNP
R-10	154866	5.6K 1/2 WATT ±10%	R-34	872378	100 Ω 1/2 WATT ±10%	C-17	161022	25 MFD 10 VDC ELECTROLYTIC	Q-6	161835	TRANSISTOR 2N1136A PNP
R-11	162892	33Ω 1/2 WATT ±5%	R-35	161828	18Ω 1/2 WATT ±10%	C-18	159634	1300 MFD 35VDC ELECTROLYTIC	Q-7	161835	TRANSISTOR 2N1136A PNP
R-12	161824	51K 1/2 WATT ±5%	R-36	126901	6.8K 1/2 WATT ±10%	C-19	159634	1300 MFD 35VDC ELECTROLYTIC	DS-1		PROJECTION LAMP
R-13	160123	680Ω 1/2 WATT ±5%	R-37	872443	12K 1/2 WATT ±10%	C-20	161020	.005 MFD 50VDC MIN. CERAMIC	DS-2	120359	PHOTOCELL EXCITER LAMP
R-14	123301	1.1K 1/2 WATT ±5%	R-38	112546	2.7K 1/2 WATT ±10%	C-21	159420	.004 MFD 50VDC MIN. CERAMIC	*S-1	154870	INPUT SELECTOR SWITCH
R-15	126905	27K 1/2 WATT ±10%	R-39	154868	500Ω 2 WATT ±10% W W	C-22	161021	.0018 MFD 50 VDC MIN. CERAMIC	*S-2	159435	TONE CONTROL SWITCH
R-16	866521	390 Ω 1/2 WATT ±10%	*R-40	161857	CONTROL-FREQUENCY RESPONSE 2.5K	C-23	161021	.0018 MFD 50 VDC MIN. CERAMIC	*S-3	159533	PROJECTOR CONTROL SWITCH
R-17	872379	1.2 K 1/2 WATT ±10%				C-24	159418	100 MMFD 50 VDC MIN. CERAMIC	*S-4	159445	AMPLIFIER CONTROL SWITCH
R-18	165557	600 Ω 5 WATTS ±5% W W	C-1	161022	25 MFD 10 VDC ELECTROLYTIC	C-25	159409	.027 MFD 100 VDC MIN. MYLAR	*J-1		THREADLAMP SOCKET
R-19	161827	91Ω 1 WATT ±5%	C-2	161022	25 MFD 10 VDC ELECTROLYTIC	C-26	159414	.033 MFD 100 VDC MIN. MYLAR	CB-1	151383	CIRCUIT BREAKER
R-20	127852	300 Ω 5 WATT ±10% W W	C-3	161858	.015 MFD 50 VDC MYLAR	C-27	159419	.047 MFD 100 VDC MIN. MYLAR	*T-1	161836	DRIVER TRANSFORMER
R-21	872443	12 K 1/2 WATT ±10%	C-4	161022	25 MFD 10 VDC ELECTROLYTIC	C-28	164758	40 MFD 25 VDC ELECTROLYTIC	*T-2	161837	POWER TRANSFORMER
R-22	126900	10 K 1/2 WATT ±10%	C-5	164758	40 MFD 25 VDC ELECTROLYTIC	C-29	159413	10 MFD 50 VDC ELECTROLYTIC	P-1	159551	POWER CORD
R-23	161828	18 Ω 1/2 WATT ±10%	C-6	161022	25 MFD 10 VDC ELECTROLYTIC	C-30	164757	.001 MFD ±10% 50 VDC MIN. CERAMIC	R-41	164603	25 K POTENTIOMETER
R-24	126900	10 K 1/2 WATT ±10%	C-7	159413	10 MFD 50 VDC ELECTROLYTIC	C-31	164757	.001 MFD ±10% 50 VDC MIN. CERAMIC	R-42	154868	500Ω 2 WATTS ±10% W W

*Use exact replacement – made to Kodak specifications

AMPLIFIER SCHEMATIC CIRCUIT (January 1963)

FIGURE 87

PART NO.	PART NAME	FIG.
	*Photocell Exciter Lamp, ASA Code BSK, 6 V, 1 amp	7,87
	*Lamp, ASA Code DDB, 750 W, 115-120 V	22,87
	*Lamp, ASA Code DFD, 1000 W, 115-120 V	22,87
	*Lamp, ASA Code DHT, 1200 W, 115-120 V	22,87
	*KODAK Projection EKTANAR Lens, 2-inch, f/1.6	1
	*KODAK Projection EKTANON Lens, 1 1/2-inch, f/2.0	1
	*KODAK Projection EKTANON Lens, 3-inch, f/2.0	1
	*KODAK Projection EKTANON Lens, 4-inch, f/2.5	1
K-1655	Shutter Drive Belt and Shifting Roller Kit	35
7514	Ball - Carbon steel, 3/16	54
12177	Ball - Carbon steel, 1/8	54
13775	Lens - Condenser rear	23
25739	Washer	16
25883	Ball - Carbon steel, 3/32	9
33992	Lockwasher - Int tooth, No. 10	29
37266	Washer - 5/32 ID x 3/8 OD x .049 thk	80
37492	Nut - Hex, 5/16-24	12
42533	Nut - Hex, 6-32	73,80
42745	Nut - Hex, 10-32	80
42874	Lockwasher - Int tooth, No. 6	27,38
43609	Nut - Hex, 8-32	20
45322	Nut - Hex, 4-40	42,44
46236	Washer	12
46893	Lockwasher - Int tooth, 5/16	12
48023	Washer	13
48969	Washer - .010	51
50088	Setscrew - Hex sock., cup pt, 1/4-20 x 3/4	15
53768	Setscrew - Hex sock., cup pt, 8-32 x 1/4	21,25
55776	Lockwasher - Int tooth, No. 6	15
56786	Washer - 13/32 ID x 13/16 OD x .065 thk	2
57155	Nut - Hex, 4-40	48
58694	Plunger	10,14
58696	Spring	10,14
69682	Lockwasher - Int tooth, No. 6	73
71638	Clamp	48
74906	Washer	67
75847	Washer - 1/4 ID x 9/16 OD x .065 thk	2
76529	Screw - Cap, hex sock. hd, 10-32 x 3/8	29
77219	Washer	9
78621	Lockwasher - Ext tooth, No. 10	80
78624	Washer	51
78671	Resistor - 47 KΩ10%, 1/2 W	82,87
79097	Washer	53
80753	Lockwasher - Int tooth, 3/8	79
80969	Washer	12
83373	Reflector	22
86892	Washer	42
87269	Washer	30
87777	Screw	47
88937	Plate	74
89342	Lockwasher - Ext tooth, No. 8	20
90630	Washer - 3/32 ID x 1/4 OD x .020 thk	61
92950	Washer - .005	51
93847	Washer	28
97826	Ring - Retaining, ext, Truarc No. 5100-25 or equiv	69
101470	Screw - Mach, min hd, 4-40 x 1/4	53
107101	Setscrew - Hex sock., cone pt, 5-40 x 3/16	59,66,69
107243	Screw - Mach, flat hd, 4-40 x 3/16	21
107606	Ring - Retaining, ext, Truarc No. 5100-31 or equiv	28
108546	Nut - 10-32, Elastic Stop Nut No. 22TM-02 or equiv	16
109571	Setscrew - Hex sock., cone pt, 4-40 x 1/8	39
112546	Resistor - 2700 Ω10%, 1/2 W	82,87
116264	Rivet	6
117165	Spring - Condenser lens separator	23
117543	Plate - Claw pivot	55
117547	Eccentric - Stroke adjusting	55
117548	Pivot - Framing lever	53
117549	Spacer - Claw pivot plate	55
117705	Cam - Pulldown	51
117713	Cup - Damping bearing	61
117725	Worm - Shutter shaft	69
117736	Sound Optics Assembly	44
117762	Spring - Sprocket roller	58,60
119395	Washer	37
119816	Resistor - 1000 Ω10%, 1/2 W	82,87
120213	Sleeve - Mechanism support bracket	18
120243	Shaft - Rewind shift plate	67
120335	Washer	47
120389	Rivet	65
120391	Guide - Aperture plate	65
120392	Spring - Side guide	65
120393	Rivet	65,68
120422	Washer	18,49
120438	Link - Pressure roller equalizing	40
120444	Grommet	7,11,18,21
120445	Sleeve	7,11,21 25,70

*Listed in Kodak Price Catalog

PART NO.	PART NAME	FIG.
120456	Bearing - Ball, Norma Hoffman No. R-4-PP oil lub, or equiv	39
120466	Spring - Sound optics bracket	41
120468	Eccentric - Sound optics bracket	42
120471	Post - Sound optics mount adjusting	44
120475	Spring - Sound optics mount	44
120476	Nut	44
120486	Spring - Sprocket guard detent	60
120642	Washer	41,58,60
120672	Clip - Reel spindle	10,14
120674	Bearing - Ball, Norma Hoffman No. R-4-PP grease lub, or equiv	69
120986	Washer	39
121507	Sprocket Roller Plate Assembly	58,60
121510	Condenser Mount Assembly	22,23
121517	Arm Assembly	40
122233	Washer	8
122608	Bracket - Speaker cable	76
122666	Screw - Mach, pan hd, 4-40 x 3/8	42
122686	Screw - Wood, rd hd, No. 8 x 1/2	76
122713	Screw - Mach, pan hd, 6-32 x 1/2	1,17,57
122714	Screw - Mach, pan hd, 8-32 x 1/2	1
122717	Screw - Mach, pan hd, 4-40 x 3/16	5,21,22, 41,56,70
122720	Screw - Mach, pan hd, 4-40 x 5/16	42
122721	Screw - Mach, pan hd, 6-32 x 5/16	57,59,67
122727	Screw - Mach, pan hd, 10-32 x 1/2	80
122730	Screw - Mach, pan hd, 4-40 x 5/8	43,48
122767	Screw - Mach, pan hd, 10-32 x 1	2
122778	Screw - Mach, pan hd, 6-32 x 1	5
122791	Screw - Tap., Type A, pan hd, No. 10 x 3/4	2,71,76
122808	Screw - Mach, pan hd, 4-40 x 1/8	56
122814	Screw - Mach, pan hd, 2-56 x 3/16	44,61
122992	Nut - Hex, 6-32	27,38
123153	Setscrew - Hex sock., cup pt, 5-40 x 3/16	1
123301	Resistor - 1100 Ω5%, 1/2 W	82,87
123363	Washer	16
123633	Screw - Tap., Type B, pan hd, No. 2 x 1/8	6
123639	Spring - Handle	74
123851	Belt - Rewind	1,7
123856	Washer	8
123857	Washer - Spring, Shakeproof No. 3502-20-7 or equiv	8
123869	Support - Lower loop	56
123885	Spring - Rewind shaft lever detent	68
123898	Spacer - Fan housing	15
123970	Screw - Mach, pan hd, 6-32 x 1 3/4	15
124128	Lockwasher - Int tooth, alternate twist, 3/8, Shakeproof No. 1220-05 or equiv	8
124214	Washer - Spring, Shakeproof No. 3502-10-28 or equiv	16
124338	Screw - Tap., Type F, pan hd, 10-32 x 3/8	79
124404	Sleeve	2
124606	Damping Arm Assembly	61
124832	Screw - Mach, min hd, 2-56 x 3/16	45,57,59
125104	Spring - Claw	54
125349	Washer	6,72
125789	Ball - Nylon, 3/16	58,60,70
125854	Grommet	2
126101	Resistor - 470 KΩ10%, 1/2 W.	82,87
126200	Roller	31,32,35
126284	Pawl	13
126319	Gear - Reverse drive differential	66
126321	Gear and Sprocket Drive Assembly	66
126326	Pulley - Rewind drive	67
126332	Chain - Reverse flywheel drive	15,39
126355	Screw - Mach, pan hd, 6-32 x 1 5/8	80
126394	Resistor - 4700 Ω10%, 1/2 W.	82,87
126751	Plate - Sprocket	57,59
126752	Sprocket	57,59
126841	Collar	57
126842	Stud	67
126900	Resistor - 10 KΩ10%, 1/2 W	82,87
126901	Resistor - 6800 Ω10%, 1/2 W.	82,87
126905	Resistor - 27 KΩ10%, 1/2 W	82,87
127184	Stud - Sprocket drive	57
127852	Resistor - W.W., 300 Ω10%, 5 W	82,87
127868	Spring - Pulldown in-and-out	52
128527	Ring - Retaining, ext, Truarc No. 5133-18 or equiv	49,53
128713	Washer	51
128838	Foot	2,71
128967	Rivet	71
129404	Roller - Pressure	40
129413	Spring - Pressure pad	64
129414	Post - Pressure pad hinge	63
129415	Spring - Gate mounting	63
129457	Spring - Lens retaining	70
129458	Catch - Film gate	70

PART NO.	PART NAME	FIG.
129461	Spring - Loop restorer	41
129464	Pivot - Loop restorer	41
129465	Handle - Loop restorer	40
129467	Anchor - Loop restorer spring	41
129672	Pin - Dowel, 1/8 x 5/8	13
129757	Ring - Retaining, ext, Truarc No. 5133-9 or equiv.	68
129870	Screw - Mach, pan hd, 2-56 x 5/64	64
130179	Loop Former Arm and Shaft Assembly	41
130340	Pin - Spring, 1/16 x 3/8	9
130432	Washer	30,31, 32,35
130610	Clip	25
131075	Ring - Retaining, ext, Truarc No. 5133-12 or equiv	30,31,32, 33,35
131241	Plate	75
131263	Washer - Spring, phos bronze, Shakeproof No. 3502-20-08 or equiv.	75
131268	Washer	75
131270	Setscrew - Hex sock., cone pt, 6-32 x 1/4	78
131363	Spring - Reverse drive	66
131369	Actuator - Reverse take-up clutch	66
131544	Spring - Damping roller	61
131545	Setscrew - Hex sock., oval pt, 4-40 x 5/8	44
131546	Spring - Pressure roller	40
131563	Clutch and Bushing Assembly	49
131564	Bracket and Stud Assembly	49
132036	Bracket Assembly	44
132053	Spring - Shutter weight return	51
132172	Shutter Blade and Studs Assembly (Inner)	51
132173	Shutter Blade and Studs Assembly (Outer)	51
134124	Shutter Assembly	50,51
134125	Shutter Weight Assembly	51
136709	Resistor - 47 Ω10%, 1/2 W	82,87
137362	Ring - Retaining, ext, Truarc No. 5133-12 or equiv	58,60
137413	Rivet	79
138142	Baffle	63
138144	Aperture Plate Assembly	63,65
138147	Stop - Sound drum shaft	72
138229	Washer	3
138232	Washer	76
138252	Ring - Retaining, ext, Truarc No. 5103-25 or equiv	39
138254	Ring - Retaining, ext, Truarc No. X5133-31 or equiv	75
138688	Grommet	7,25,70
139480	Pad - Claw pivot, large	54
139481	Pad - Claw pivot, small	54
140102	Washer	28
140110	Washer	13
140111	Washer	25
140118	Window	6
141285	Pin - Spring, stain. steel, 3/32 x 1/4	10,14
141537	Setscrew - Hex sock., cup pt, 4-40 x 1/4	36
142849	Washer - Spring, Shakeproof No. 3509-08-00 or equiv.	47
142850	Screw	7,56
143177	Pivot - Supply arm	8
143179	Screw	4
143206	Fan	26
143229	Capacitor - Ceramic disk, 1500 MMFD 10%, 450 VDC	81,87
144638	Ring - Retaining, ext, Truarc No. 5133-15 or equiv	53
145169	Support and Lamp Chimney Assembly	22
145170	Socket - Lamp, made to Kodak specifications	48
145264	Claw Assembly	54
146461	Stop - Framing lever	53
146581	Washer	31,32, 33,35
147657	Speaker Cable and Plug Assembly	76
147688	Nut - Finished hex, 1/4-28, left-hand	51
147693	Roller - Sprocket	58,60
147697	Roller - Loop restorer	40
147756	Resistor - 1800 Ω10%, 1/2 W.	82,87
147781	Screw - Mach, pan hd, 8-32 x 5/8	25
147832	Socket - Switchcraft Littel Jax No. S-11 or equiv	79
148960	Roller - Damping	61
149578	Cam - In-and-out	51
149738	Washer	67
150124	Fastener - Sems, mach, pan hd, 4-40 x 3/16	40,52,61
150125	Fastener - Sems, mach, pan hd, 4-40 x 5/16	39,53,55
150266	Medallion - Kodak	71
151383	Breaker - Circuit, 1.125 amp operating, 2.0 amp break	79,85,87
151409	Shaft - Shutter	69
151951	Fastener - Sems, mach, pan hd, 6-32 x 3/16	52,54,68
151952	Fastener - Sems, mach, pan hd, 6-32 x 3/8.	19,29
152627	Screw - Tap., Type F, pan hd, 4-40 x 3/16	81
153360	Roller	31,32, 33,35
153930	Adapter - Grounding, Royal Electric No. 210 or equiv	1
154621	Washer	78
154866	Resistor - 5600 Ω10%, 1/2 W.	82,87

PART NO.	PART NAME	FIG.
154868	Resistor - W.W., 500 Ω10%, 2 W	20,80,83, 85,87
154870	Switch - Made to Kodak specifications	79,87
155047	Screw - Mach, oval hd, 6-32 x 5/8	72,75
155055	Bracket - Elevator	75
155056	Plate - Elevator spacer	75
155058	Rack	75
155065	Bearing	75
155229	Washer	2,71
155270	Flywheel Assembly	16
155274	Hub	57
155278	Flywheel Shaft and Sound Drum Assembly	39
155282	Ratchet	39
155285	Spacer	16
155590	Braking Spring and Button Assembly	40
155815	Hub	59
156258	Bearing	46
156850	Nut - Keps lock, 10-32, Shakeproof No. 510-101810-51 or equiv	37
157636	Cover	43,75
157866	Fastener - Sems, mach, pan hd, 2-56 x 3/16	63
158002	Setscrew - Hex sock., cup pt, 4-40 x 3/32	57
158638	Spring - Condenser lens	23
150409	Capacitor - Mylar dielectric, .027 MFD, 100 VDC	81,87
159410	Capacitor - Electrolytic, 125 MFD +100% -10%, 50 VDC, I.E.I. No. APD137 or equiv	81,87
159413	Capacitor - Electrolytic, 10 MFD +100% -10%, 50 VDC, I.E.I. No. APD057 or equiv	81,87
159414	Capacitor - Mylar dielectric, .033 MFD, 100 VDC	81,87
159416	Capacitor - Made to Kodak specifications	80,85,87
159418	Capacitor - Ceramic disk, 100 MMFD 10%, 50 VDC	81,87
159419	Capacitor - Mylar dielectric, .047 MFD, 100 VDC	81,87
159420	Capacitor - Ceramic disk, .004 MFD 10%, 50 VDC	81,87
159422	Socket - Cinch No. 133-92-10-034 or equiv	79,81
159423	Washer - Mica, .002 thk, Reliance Mica No. 734 or equiv	79
159427	Potentiometer - Volume control, 5 K Ω30%, Stackpole Carbon No. LH61 or equiv	82,87
159429	Socket - Switchcraft No. 3501FP or equiv	79
159430	Connector - Microphone, Switchcraft No. 2501 MPC or equiv	79
159431	Washer - Shoulder, Switchcraft No. S-1564 or equiv	79
159432	Washer - 1/4 ID x 1/2 OD x 1/16 thk, H. H. Smith No. 2165 or equiv	79
159433	Washer - Shoulder, Switchcraft No. 5-1078 or equiv	79
159434	Washer - 3/8 ID x 5/8 OD x 1/16 thk, H. H. Smith No. 2168 or equiv	79
159435	Switch - Made to Kodak specifications	82,87
159441	Screw - Mach, min hd, 6-32 x 1 3/8	80
159442	Motor and Bracket Assembly	26
159443	Guide	79
159445	Amplifier Switch and Thread Lamp Socket Assembly	79,85,87
159465	Fastener - Sems, mach, pan hd, 8-32 x 1	16
159511	Handle	73,74
159512	Grille	71
159513	Bracket - Handle	73
159514	Washer - Finishing, brass, National Lock No. 61-3206 or equiv	72
159515	Screw - Mach oval hd, 6-32 x 3/4	72
159516	Lock - Eagle Lock No. 05918F or equiv	71
159520	Post - Case handle	73
159521	Post - Cover handle	74
159522	Pin - Handle	73,74
159523	Plate - Handle post	73,74
159529	Spring - Toggle	38
159530	Bracket	38
159531	Arm - Toggle plate	38
159532	Plate	38
159533	Switch - Control, made to Kodak specifications	36,87
159534	Control Switch Cam and Pinion Assembly	36
159536	Link	38
159539	Stud	27
159542	Housing - Fan	21
159547	Yoke	37
159548	Screw	37
159549	Plate	38
159551	Cord - Power	1,87
159552	Motor Pulley Assembly	25
159554	Stud - Toggle plate	38
159556	Pivot - Shutter drive arm	27
159557	Plate	21
159559	Roller - Speed shifting eccentric	30
159560	Plate - Supply arm	8
159562	Spring - Shifting roller	30,31, 32,35

Always give PART NUMBER and NAME when ordering parts

PART NO.	PART NAME	FIG.
159563	Spring - Belt shifting	30,31, 32,33
159571	Idler	67
159574	Lever - Framing	53
159576	Shaft - Take-up belt idler	67
159577	Ring - Retaining, ext, beryllium copper, Truarc No. 5100-21 or equiv	13,67
159579	Fastener - Sems, mach, pan hd, 6-32 x 1/4	38,49
159580	Link - Rewind	68
159581	Lever - Rewind	68
159582	Shaft - Rewind lever	68
159583	Spacer - Upper sprocket plate	57
159584	Knob - Threading	69
159587	Roller	6,62
159588	Shaft - Film guide roller	6
159591	Shutter Drive Pulley Assembly	28
159595	Support - Upper loop	56
159605	Arm - Idler roller bearing	62
159607	Pin - Idler arm pivot	62
159610	Spring - Sprocket drive	57
159611	Spring - Upper sprocket guard detent	58
159633	Resistor - W.W., 25 Ω 10%, 25 W	20,83,87
159634	Capacitor - Electrolytic, 1300 MFD, 35 VDC	19,83,87
159638	Mechanism Housing Assembly	70
159644	Take-up Arm, Pin, and Bearing Assembly	13
159657	Belt - Motor drive pulley	24
159658	Plate - Take-up arm	12
159659	Top - Lamp house	4
159667	Plate - Take-up reel arm tension adjusting	12
159670	Spacer	4
159671	Screw - Tap., Type A, pan hd, No. 4 x 1/4	78
159678	Screw - Mach, pan hd, 4-40 x 1/4	79
159947	Ring - Retaining, ext, Truarc No. 5133-18 or equiv	11
160027	Washer	27
160123	Resistor - 680 Ω 5%, 1/2 W	82,87
160203	Screw - Mach, pan hd, 2-56 x 7/16	4
160392	Sound Head Bracket and Bearing Assembly	46
160552	Spacer	12
160553	Lever - Take-up arm release	11
160555	Spring - Take-up arm release lever	11
160556	Bracket and Pivot Assembly	12
160674	Clip - Cord	79
160707	Exciter Lamp Cover Assembly	5,6
160715	Pulley and Ratchet Assembly	13
160716	Take-up Spindle Assembly	13,14
160718	Arm and Pulley Assembly	27,28,35
160719	Lower Sprocket Plate Assembly	59,60
160720	Upper Sprocket Plate Assembly	57
160722	Supply Arm Assembly	8,9
160723	Elevating Knob Assembly	75
160724	Switch Bracket Assembly	36,37,38
160725	Knob Assembly	78
160726	Belt Shifting Lever Assembly	33,34
160761	Sprocket and Pawl Assembly	39
1601020	Capacitor - Ceramic disk, .005 MFD 10%, 50 VDC	81,87
161021	Capacitor - Ceramic disk, .0018 MFD 10%, 50 VDC	81,87
161022	Capacitor - Electrolytic, 25 MFD +100% -10%, 10 VDC, I.E.I. No. APD023 or equiv	81,87
161589	Grille	72
161749	Shaft - Idler roller	62
161752	Washer	12
161755	Washer	28
161756	Washer	28
161793	Pivot - Take-up reel arm	12
161810	Rewind Plate and Guide Assembly	67,68
161824	Resistor - 51 KΩ5%, 1/2 W	82,87
161827	Resistor - 91 Ω 5%, 1 W	82,87
161828	Resistor - 18 Ω10%, 1/2 W	82,87
161829	Potentiometer - Bias control, made to Kodak specifications	82,87
161830	Resistor - W.W., 1 Ω 5%, 2 W	80,82, 85,87
161831	Capacitor - Electrolytic, 75 MFD, 6 VDC	81,87
161832	Capacitor - Made to Kodak specifications	80,85,87
161835	Transistor - PNP, 2N1136A	79,85,87
161836	Transformer - Made to Kodak specifications	81,87
161837	Transformer - Made to Kodak specifications	19,83,87
161841	Component Board Assembly	81,82
161842	Amplifier Assembly	78,79
161843	Speaker - Made to Kodak specifications	76
161845	Amplifier and Exciter Lamp Power Supply Assembly	19,20
161846	Name Plate	78
161847	Plate	4
161849	Transistor - PNP, 2N1136	81,87
161855	Clamp - Tube, Tinnerman No. C2980S-17-24 or equiv	80
161857	Potentiometer - Frequency response control, made to Kodak specifications	82,87
161858	Capacitor - Mylar dielectric, .015 MFD 10%, 50 VDC	81,87

PART NO.	PART NAME	FIG.
161907	Spring - Shifting roller	30,31,32, 33,35
161911	Case Assembly	71,72
161925	Spring - Framing shaft	53
161927	Fastener - Sems, mach, pan hd, 8-32 x 7/16	16
162128	Belt - Take-up	1,7
162156	Fastener - Sems, mach, pan hd, 8-32 x 1/4	11
162260	Bushing	27
162261	Fastener - Sems, mach, pan hd, 8-32 x 3/8	27
162312	Spacer	5
162340	Spring - Take-up arm	12
162402	Name Plate	6
162403	Spring - Claw retaining	54
162679	Strip	6
162750	Bearing	70
162751	Bearing	70
162754	Upper Sprocket Shaft Assembly	57
162756	Upper Sprocket Drive Shaft and Gear Assembly	67
162764	Pinion - Elevating	75
162815	Lever - Control switch	37
162816	Knob - Control switch	1
162871	Snubber	6
162891	Resistor - 27 Ω 5%, 1/2 W	82,87
162892	Resistor - 33 Ω 5%, 1/2 W	82,87
162893	Transistor - PNP, 2N1038	81,87
162894	Standoff	80
162914	Grille	2
162998	Spring - Idler arm	62
163076	Washer	13
163077	Blower Wheel and Hub Assembly	21
163536	Washer	75
163546	Washer	68
163815	Post	15
164125	Bracket - Lower mechanism mounting	72
164127	Screw - Mach, oval hd, 8-32 x 1	3
164128	Washer - Finishing, brass, National Lock No. 61-3208 or equiv	3
164193	Rectifier - Silicon, 200 P.I.V., 750 ma., RCA No. 1N3253 or equiv	20,83,87
164231	Washer	27
164232	Washer	55
164261	Shield - Control switch	7
164262	Shield - Motor fan	7
164309	Shaft - Pressure roller	40
164310	Cam - Exciter lamp release	43
164368	Photocell Mount and Cable Assembly	45
164369	Plug - H. H. Smith No. 1246 or equiv	45
164372	Lamp House Baffle and Light Strip Assembly	17
164405	Lower Sprocket Shaft and Gear Assembly	59
164494	Exciter Lamp Contact Cover Assembly	43
164603	Potentiometer - Linear taper, 25 KΩ30%, Stackpole Carbon No. LW or equiv	79,80, 85,87
164604	Clamp - Cable, Weckesser Ny-Grip No. 1 3/8-6 or equiv	80
164628	Arm and Bushing Assembly	9
164757	Capacitor - Ceramic disk, .001 MFD 10%, 50 VDC	80,87
164758	Capacitor - Electrolytic, 40 MFD +100% -10%, 25 VDC, I.E.I. APD076 or equiv	81,87
164762	Screw - Mach, min hd, 6-32 x 1 1/2	80
164763	Standoff	80
164770	Lockwasher - Int tooth, .387 min ID x .567 max OD x .018 thk, phos bronze, Shakeproof No. 1920-05 or equiv	79
164789	Spider	66
164790	Gear	66
164853	Clip	26
165173	Spindle Assembly	9,10
165193	Pad	26
165194	Ring - O	25
165479	Name Plate	71
165556	Capacitor - Electrolytic, 25 MFD +100% -10%, 50 VDC, I.E.I. APD087 or equiv	81,87
165557	Resistor - W.W., 600 Ω 5%, 5 W	82,87
166044	Belt - Shifting	35
166260	Plate and Pivot Assembly	13
166261	Shutter Drive Arm and Shaft Assembly	28
166263	Framing Knob and Shaft Assembly	53
166264	Upper Sprocket Plate, Bearing, and Pin Assembly	58
166441	Bracket & Insulator Assembly	18
166488	Pressure Pad Assembly	63,64
166489	Aperture Plate and Pad Assembly	63
166551	Hinge Assembly (Long)	71
166552	Hinge Assembly (Short)	71
166893	Transistor - 2N217, 2N408, or 2N1370	81,87
166898	Pivot	27
167289	Pulley	9
167290	Pulley	9
761517	Plug - Switchcraft No. S250 or equiv	76
828667	Lens - Condenser, front	23

Always give PART NUMBER and NAME when ordering parts

PART NO.	PART NAME	FIG.
851299	Screw - Mach, pan hd, 6-32 x 3/16	8
851597	Screw - Tap., Type A, pan hd, No. 6 x 1/2	1,78,79,81
851927	Setscrew - Hex sock., cup pt, 8-32 x 1/8	26
861445	Washer.	37
861447	Washer.	75
866521	Resistor - 390 Ω 10%, 1/2 W. .	82,87
872378	Resistor - 100 Ω 10%, 1/2 W. .	82,87
872379	Resistor - 1200 Ω 10%, 1/2 W.	82,87
872443	Resistor - 12 K Ω 10%, 1/2 W .	82,87

Corrected to OCTOBER 1969

Parts List No. 636834

KODAK PAGEANT SOUND PROJECTOR

MODEL	BEGINNING WITH SERIAL No.
AV-126-TR	126-C01001
AV-126-TR-R	126-E03230
AV-256-TR	256-C01001
AV-256-TR-R	256-E02600

BELT–181165

BELT–123851

FIGURES 6–8

FIGURES 9–11

SCREW (3)–122713

KODAK PROJECTION
EKTANAR LENS
2-INCH, f/1.6
(Listed in Kodak Price Catalog)
Return to
Rochester for
repairs

COVER SCREW–143179

COVER–181050

SCREW (4)–160203
SPACER (4)–159670

SCREW–122714

FIGURE 4

PLATE–
181051 (AV–126–TR)
181052 (AV–126–TR-R)
181367 (AV–256–TR)
181368 (AV–256–TR-R)

FIGURE 68

FIGURE 14

FIGURE 71

POWER CORD (P-1)–159551

FIGURE 1

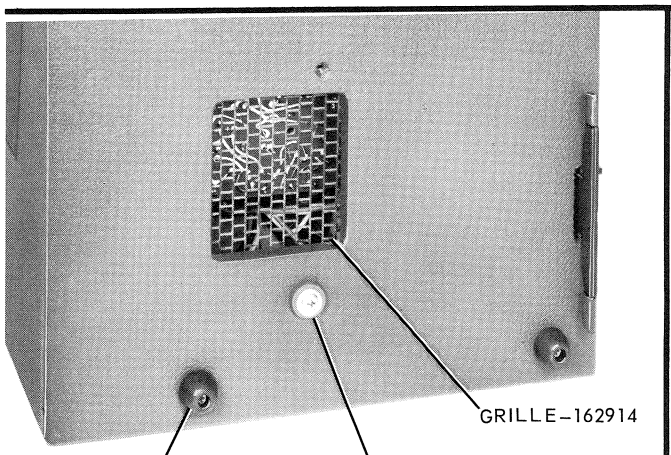

*Quantity used may vary

FIGURE 2

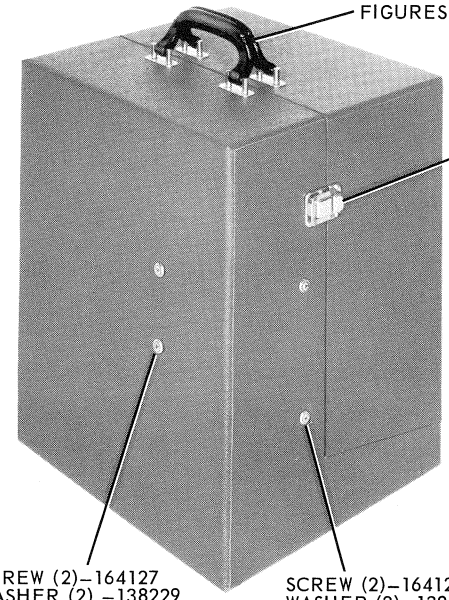

FIGURE 3

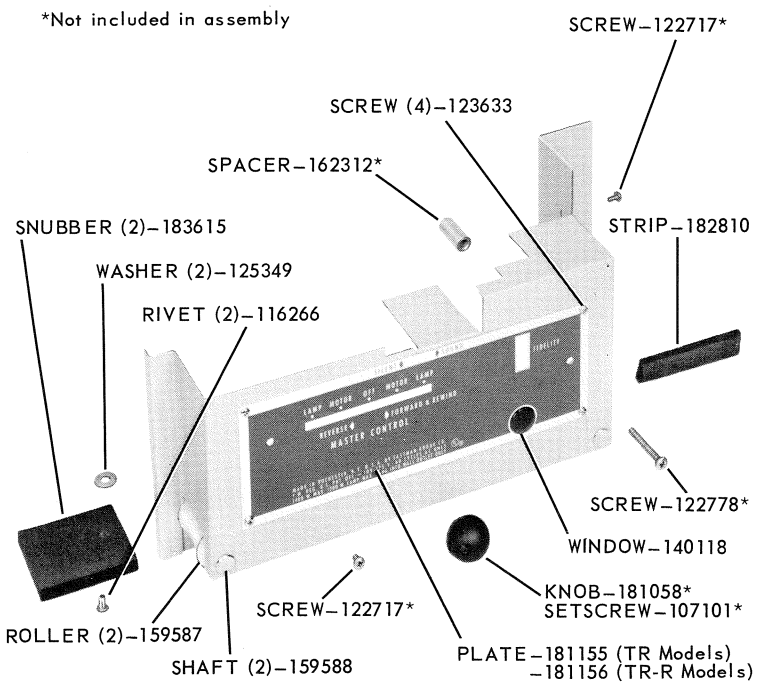

FIGURE 4 EXCITOR LAMP COVER ASSEMBLY
– 181152 (TR Models)
– 181153 (TR-R Models)

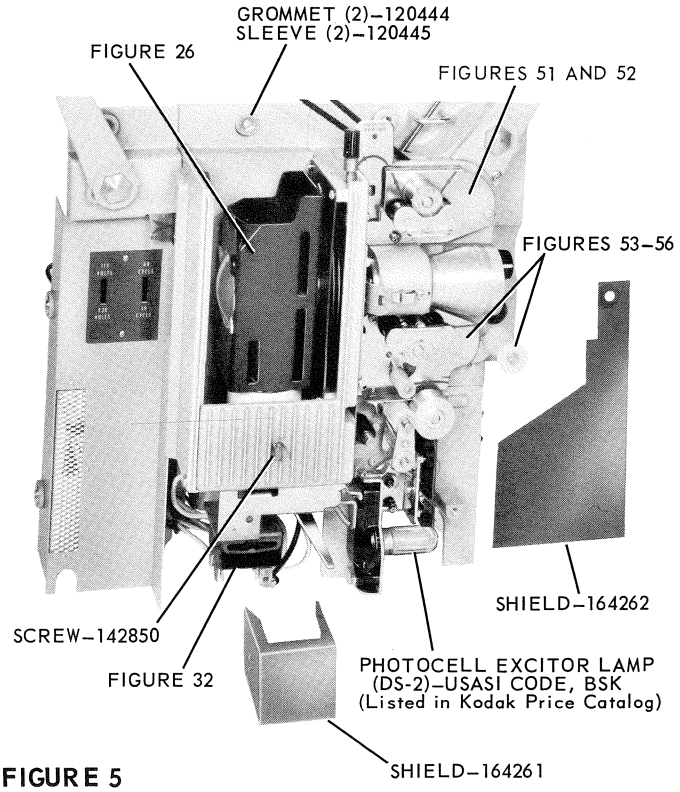

FIGURE 5

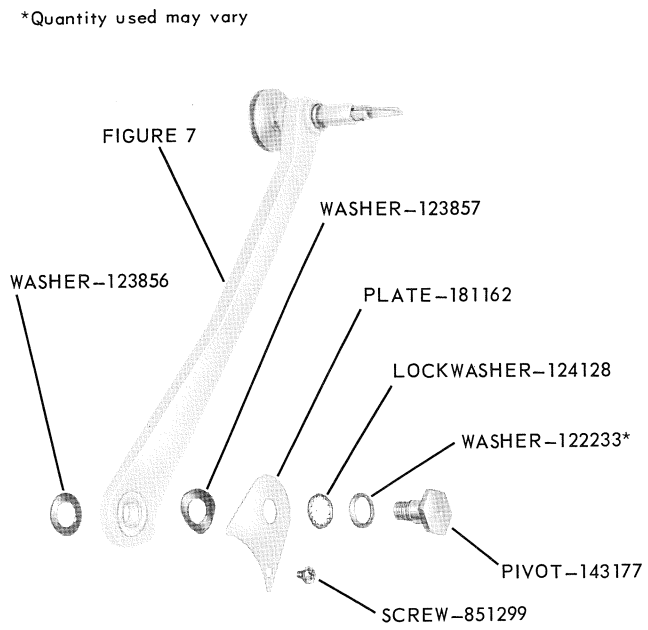

FIGURE 6 SUPPLY ARM ASSEMBLY AND RELATED PARTS

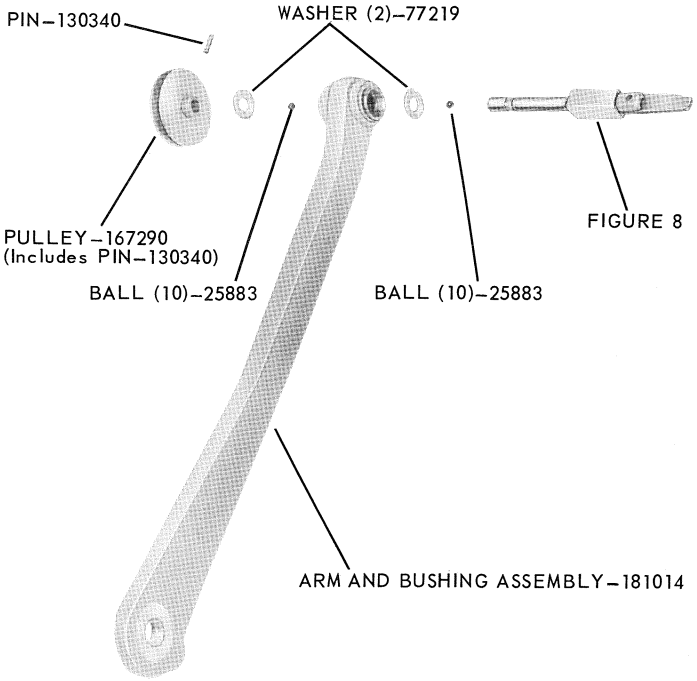

FIGURE 7 SUPPLY ARM ASSEMBLY – 181013

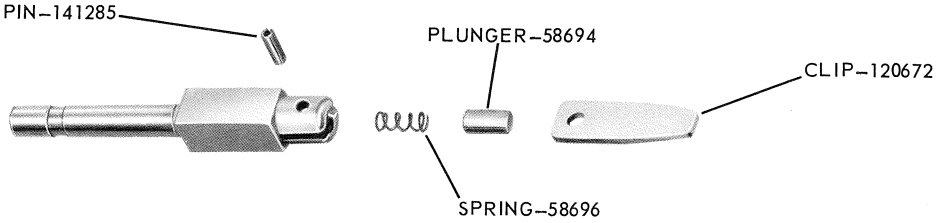

FIGURE 8 SUPPLY SPINDLE ASSEMBLY – 165173

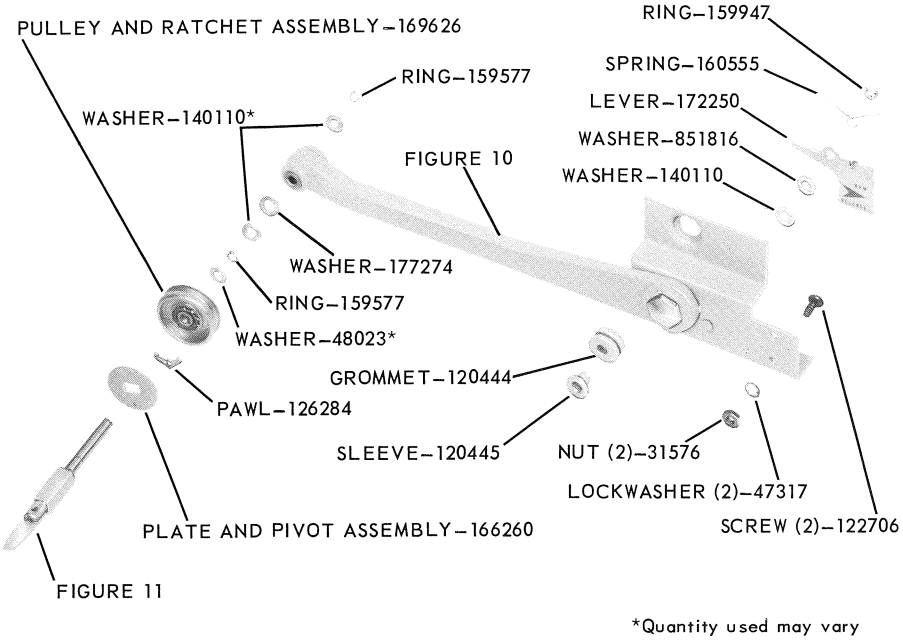

FIGURE 9 TAKE-UP ARM AND RELATED PARTS

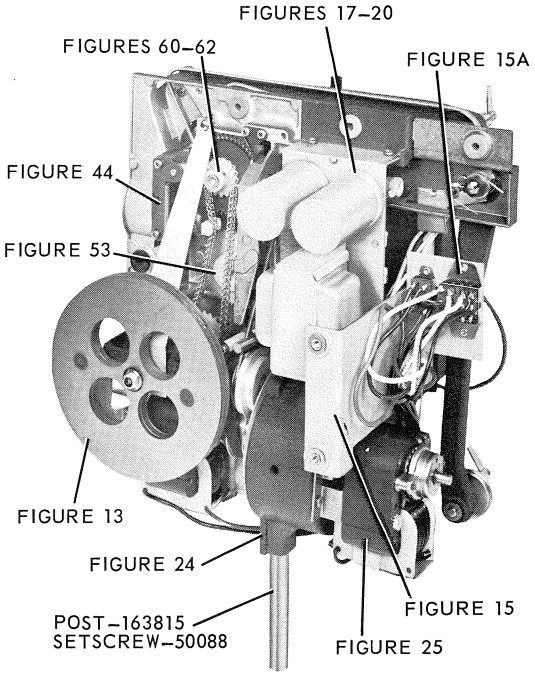

FIGURE 12

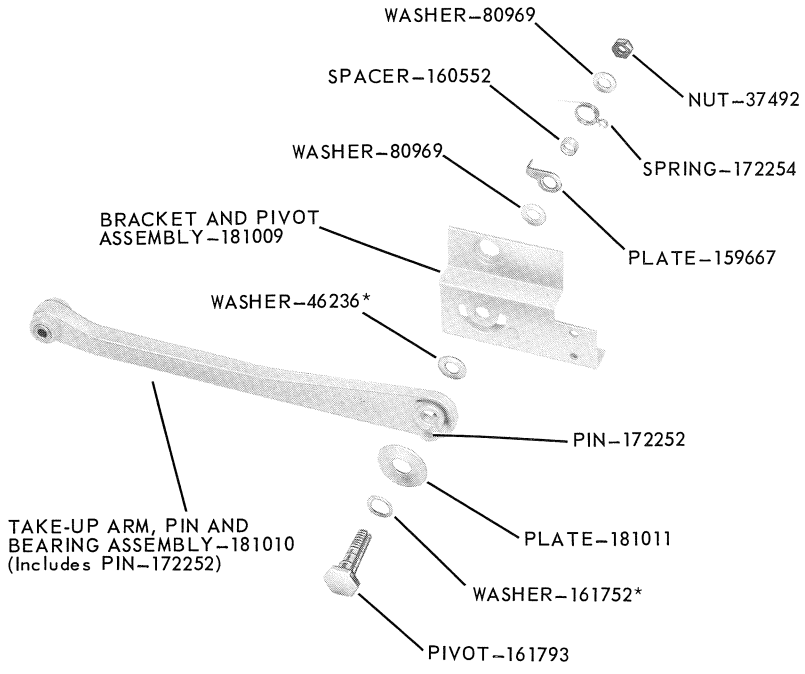

FIGURE 10

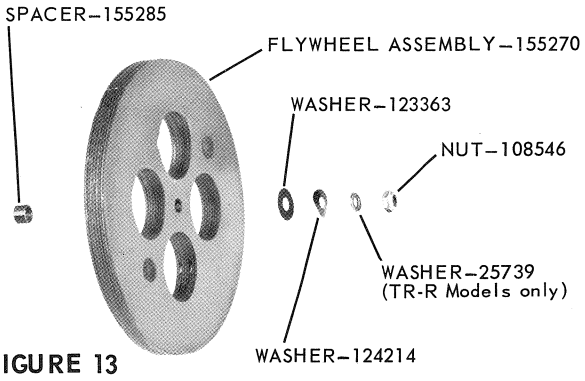

FIGURE 13

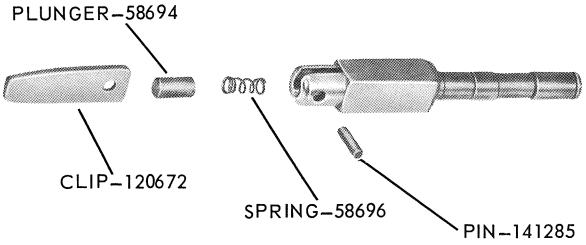

FIGURE 11 TAKE-UP SPINDLE ASSEMBLY – 160716

TR-R MODELS

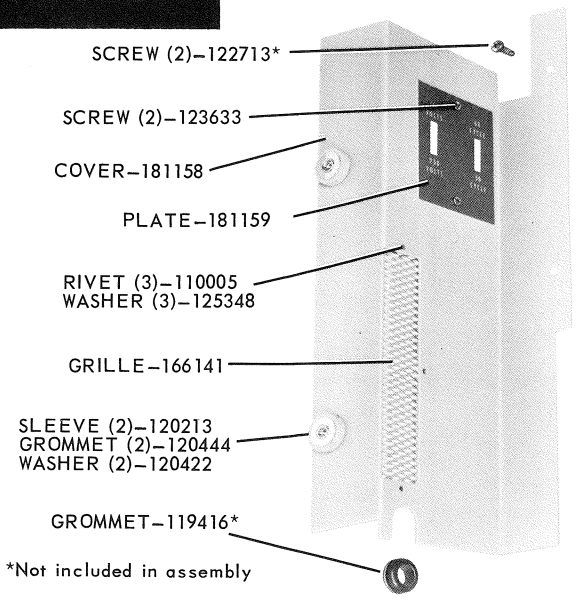

FIGURE 14 MECHANISM DRIVE COVER ASSEMBLY – 181157

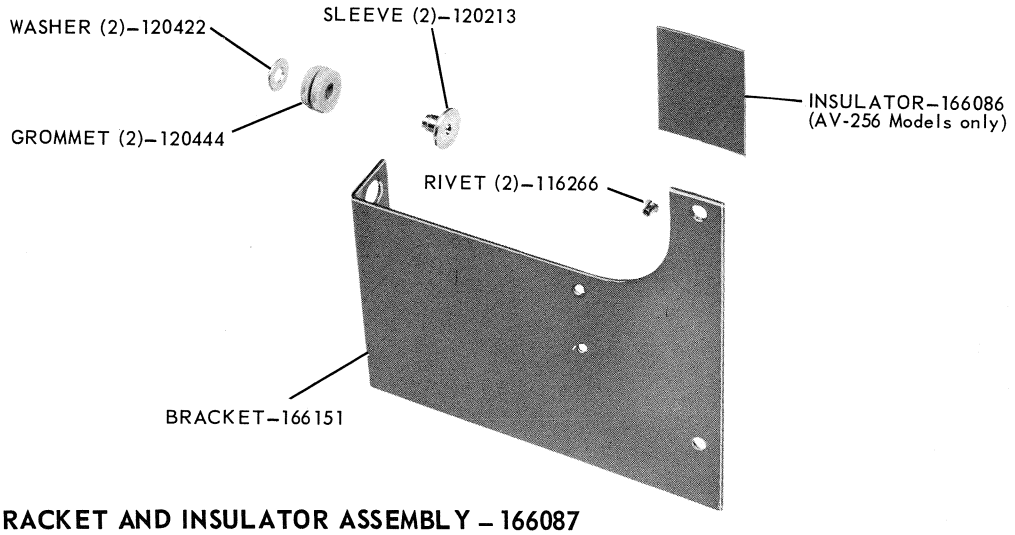

FIGURE 15 BRACKET AND INSULATOR ASSEMBLY – 166087

TR-R MODELS

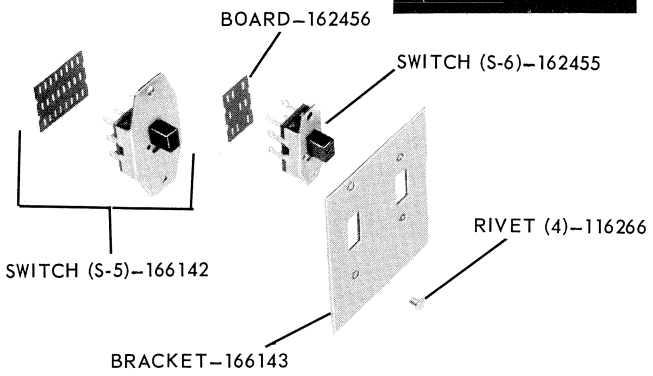

FIGURE 15A

TR MODELS

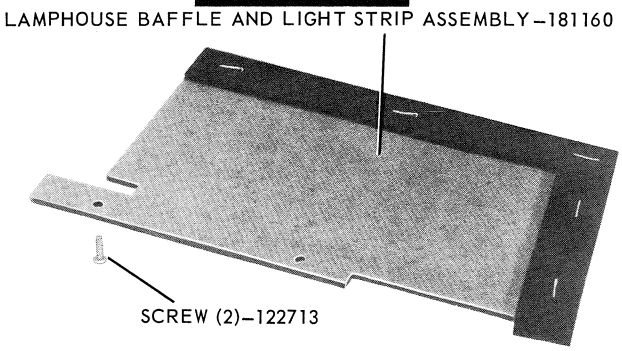

FIGURE 16

AV-126 MODELS

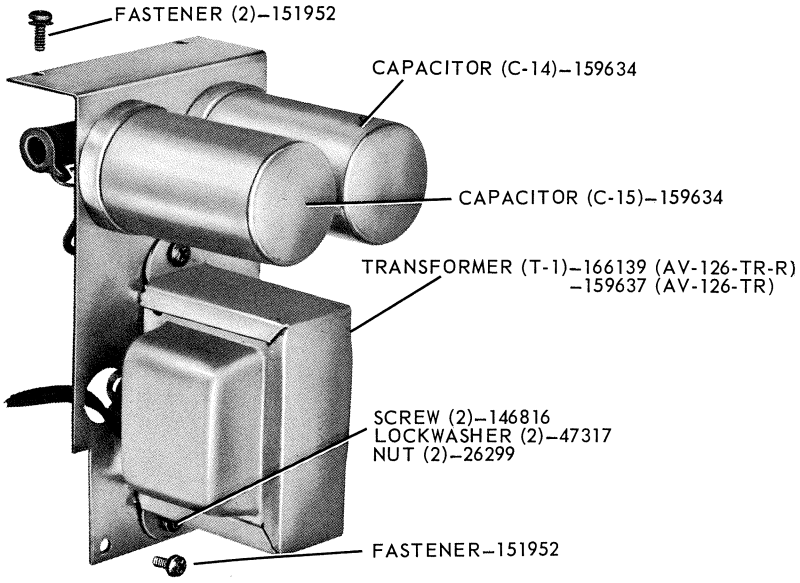

FIGURE 17 AMPLIFIER AND EXCITOR LAMP POWER SUPPLY ASSEMBLY – 166277 (AV–126–TR-R) – 159636 (AV–126–TR)

AV-126 MODELS

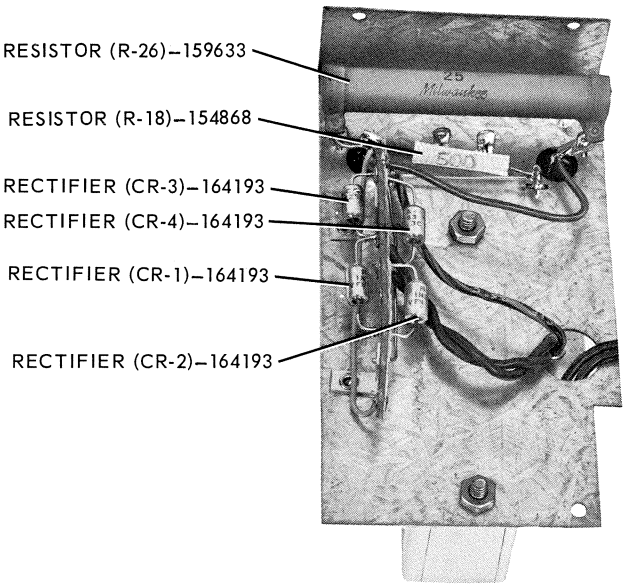

FIGURE 18

AV-256 MODELS

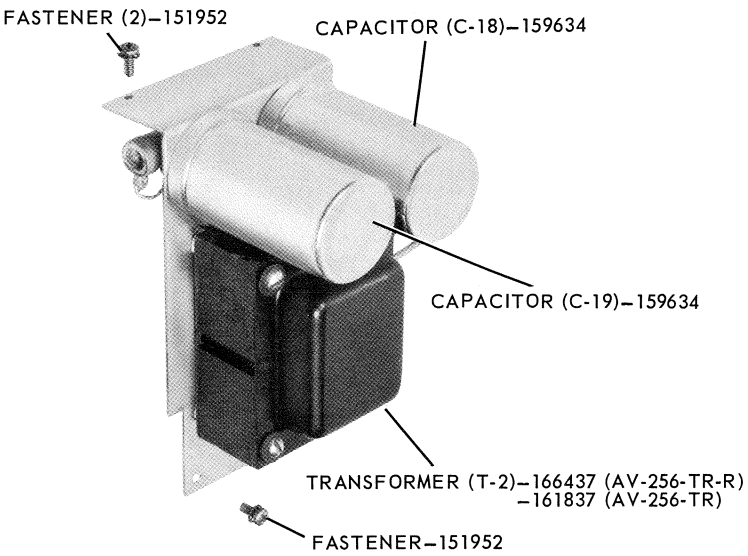

FIGURE 19 AMPLIFIER AND EXCITOR LAMP POWER SUPPLY ASSEMBLY – 166443 (AV–256–TR-R) – 161845 (AV–256–TR)

AV-256 MODELS

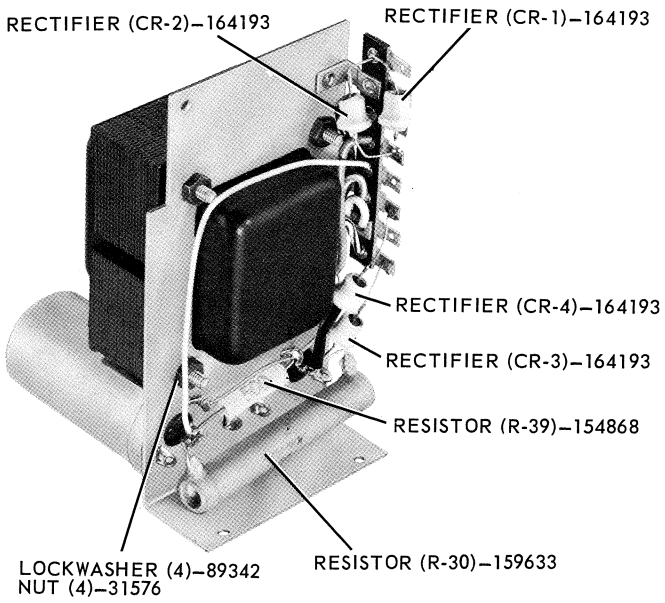

FIGURE 20

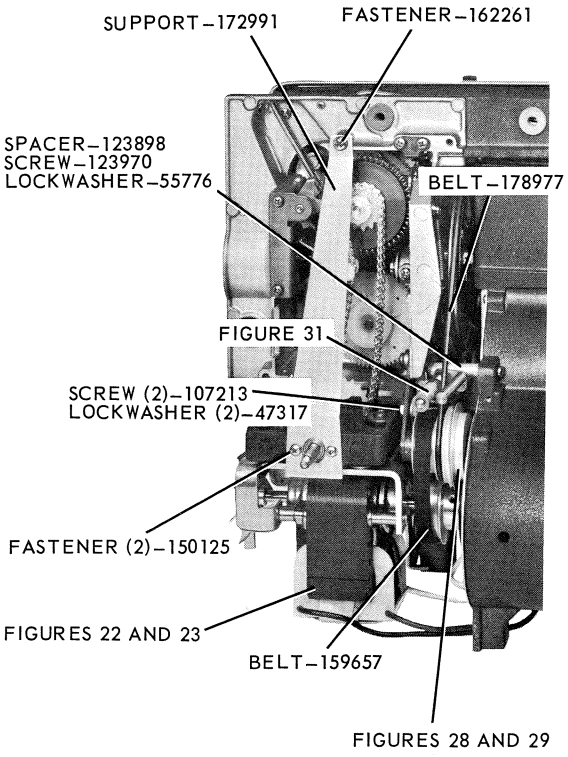

FIGURE 21

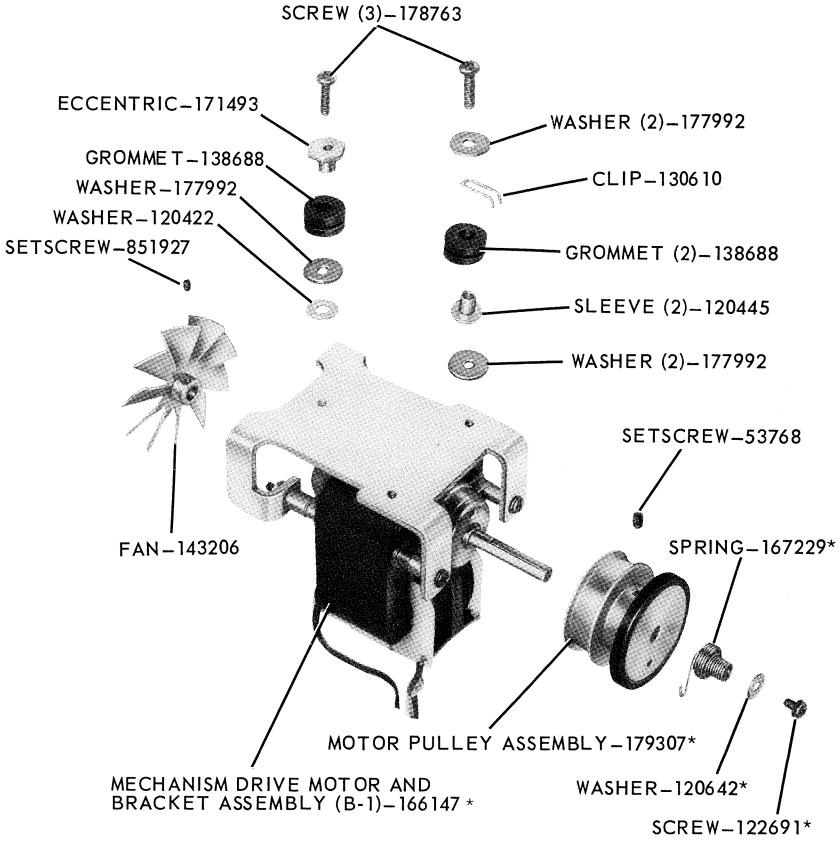

FIGURE 22

*TR-R Models only

TR MODELS

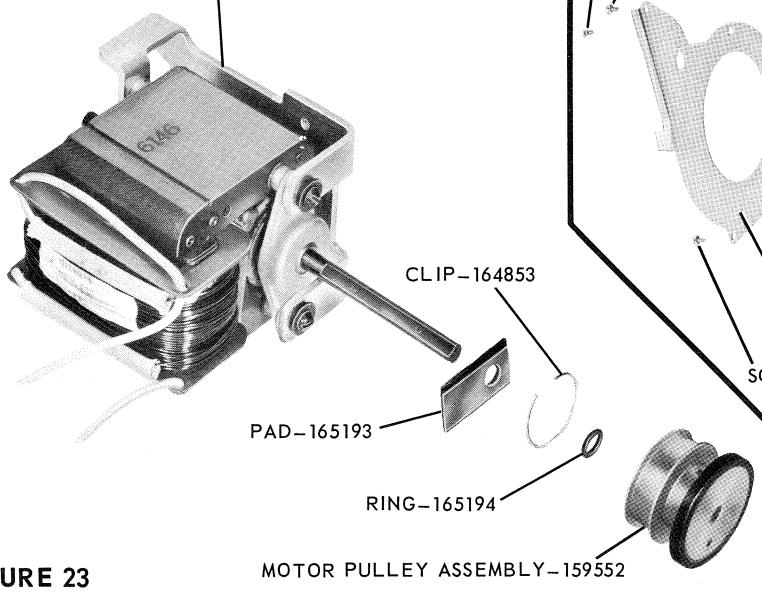

FIGURE 23

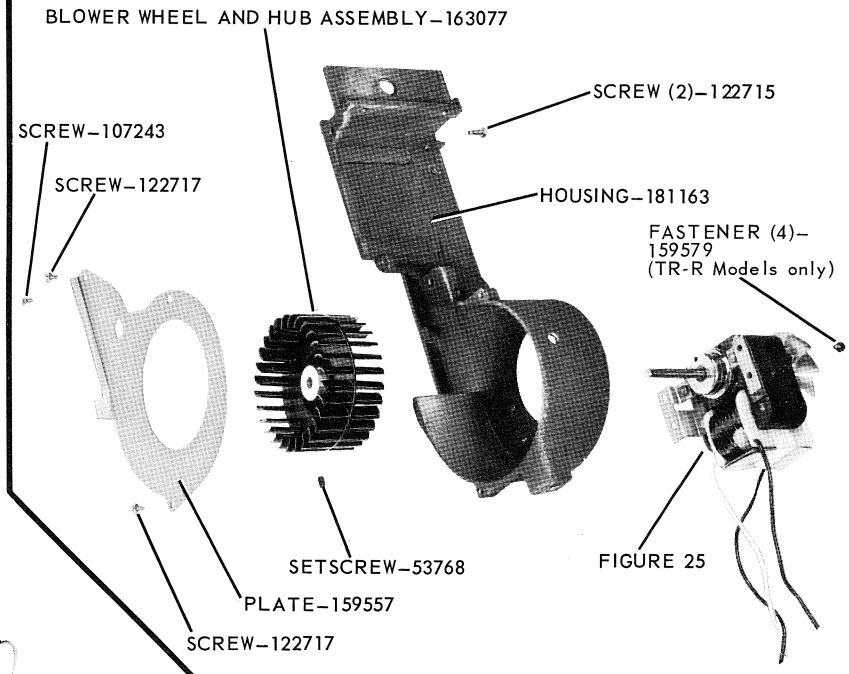

FIGURE 24

TR-R MODELS

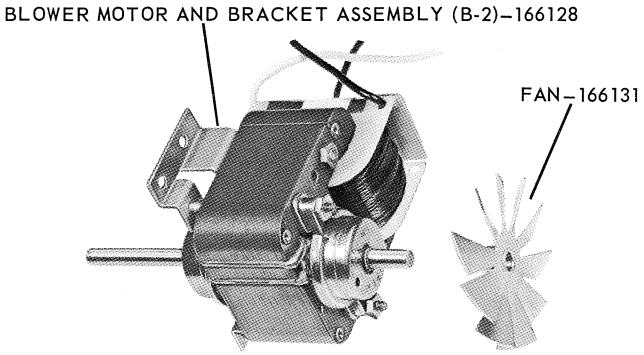

FIGURE 25

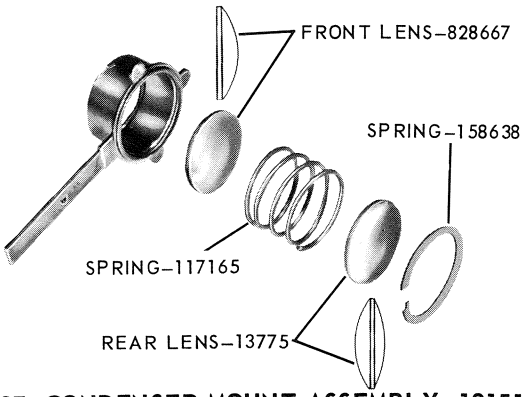

FIGURE 27 CONDENSER MOUNT ASSEMBLY–121510

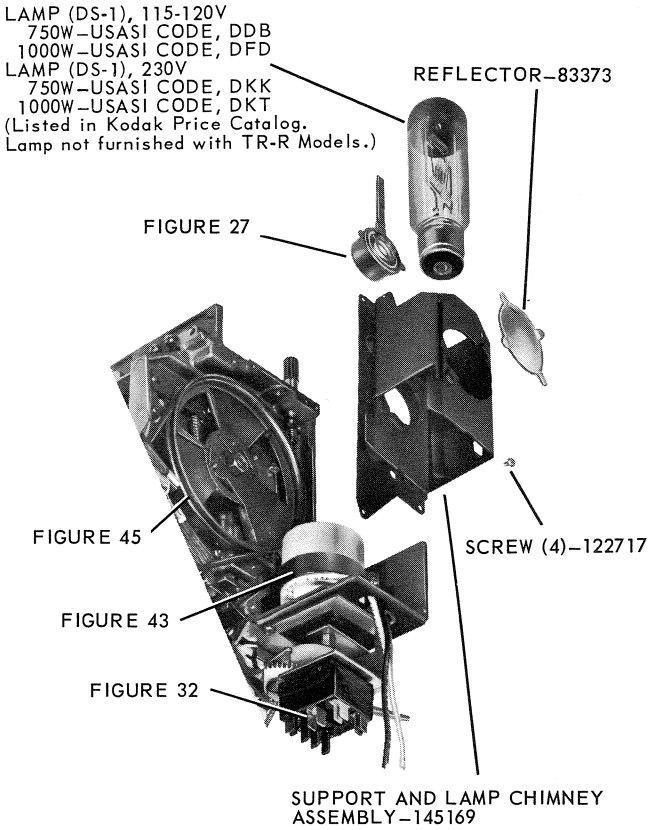

FIGURE 26

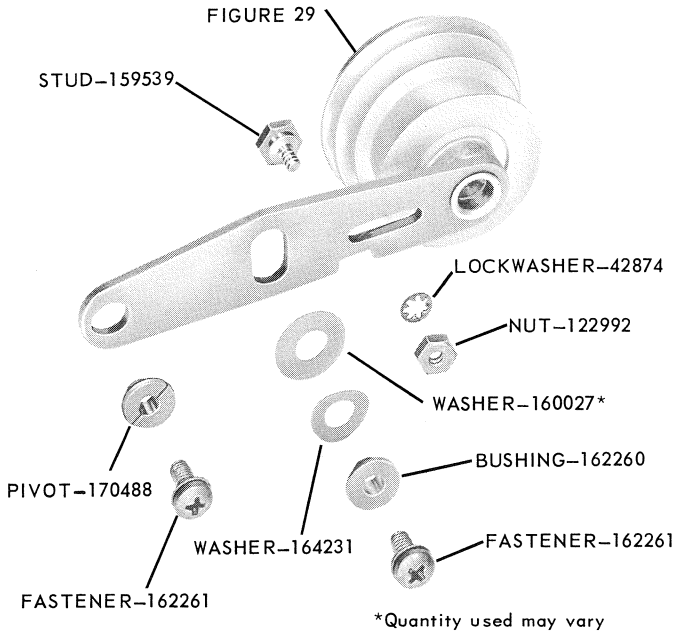

FIGURE 28

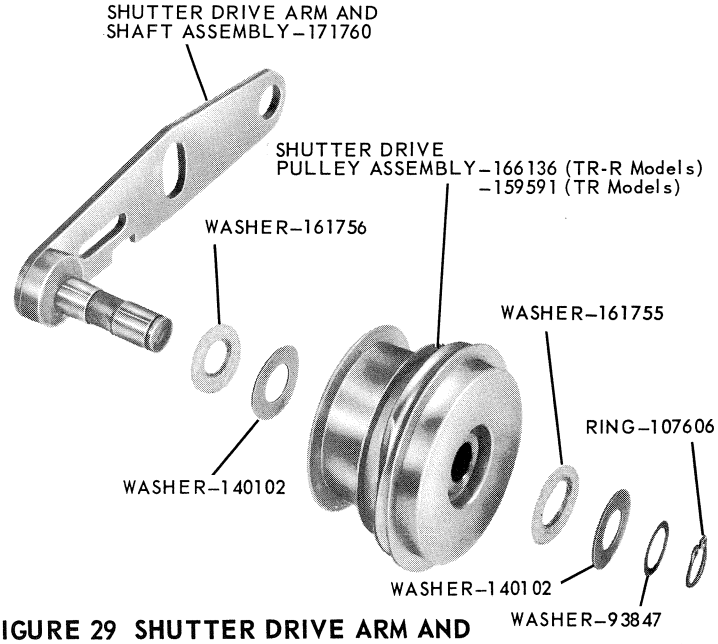

FIGURE 29 SHUTTER DRIVE ARM AND PULLEY ASSEMBLY – 170458 (TR Models Only)

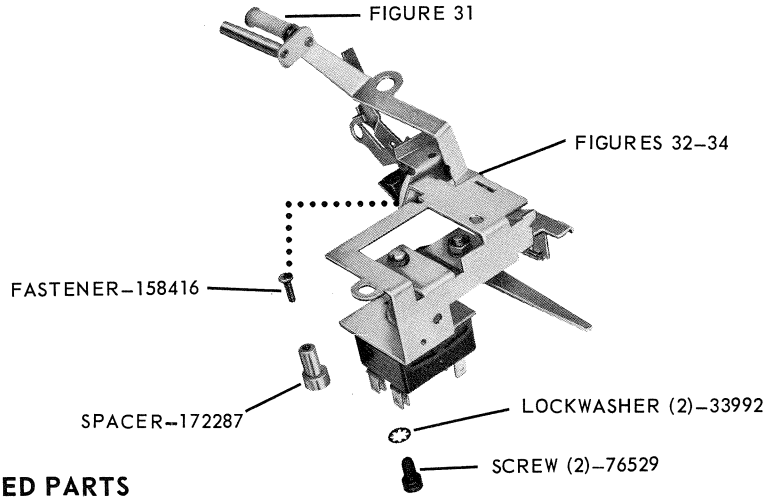

FIGURE 30 CONTROL BRACKET AND RELATED PARTS

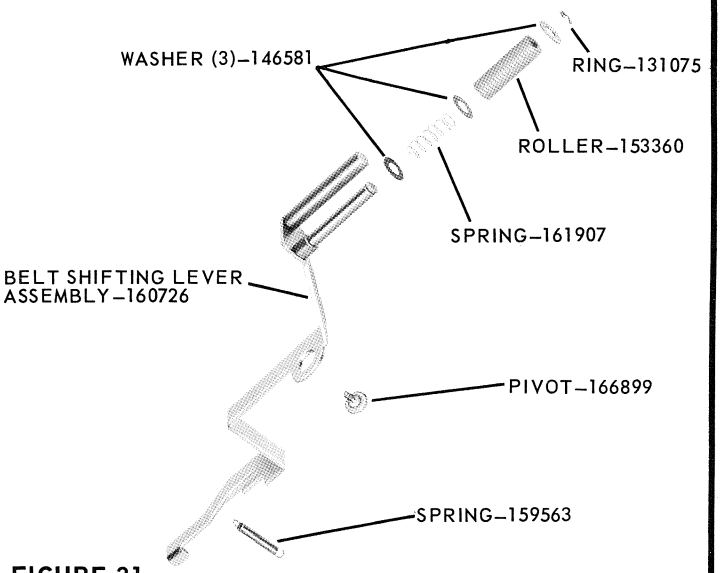

FIGURE 31

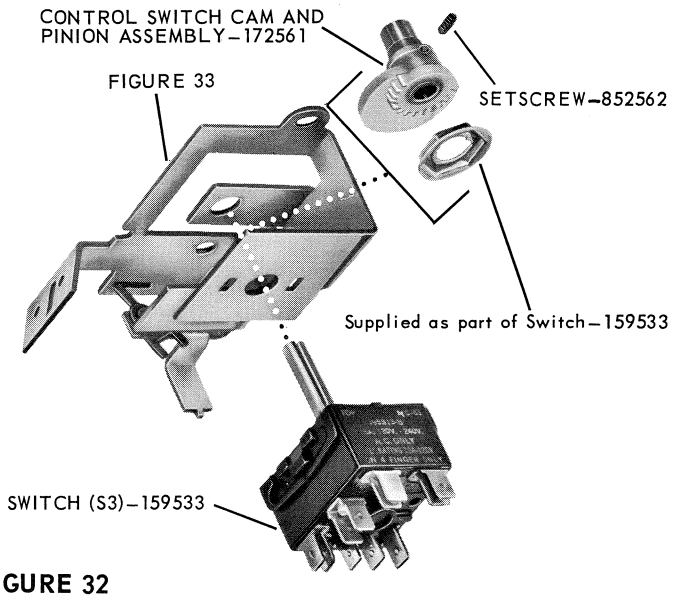

FIGURE 32

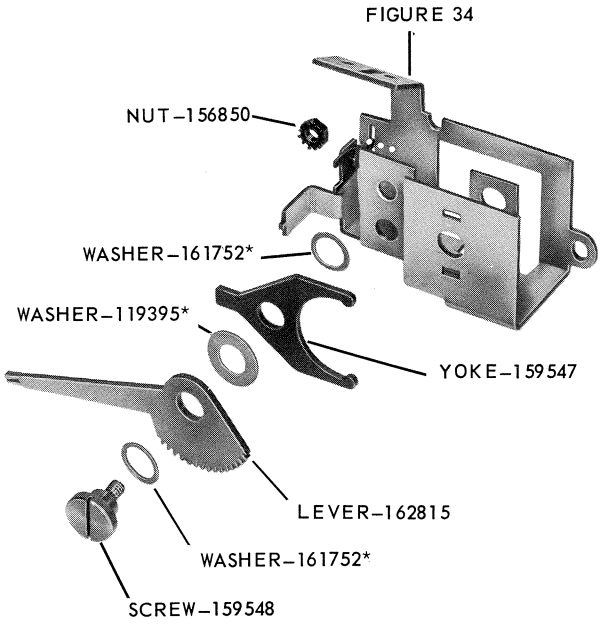

FIGURE 33

*Quantity used may vary

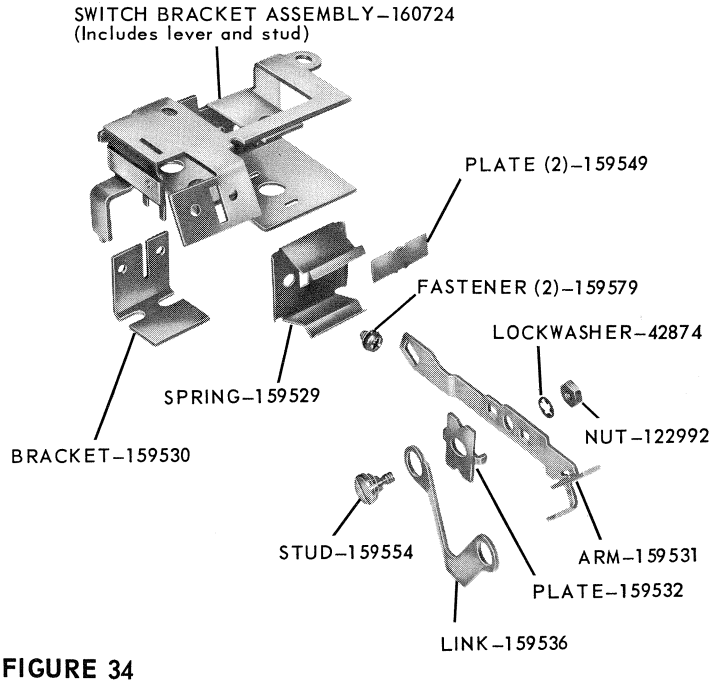

FIGURE 34

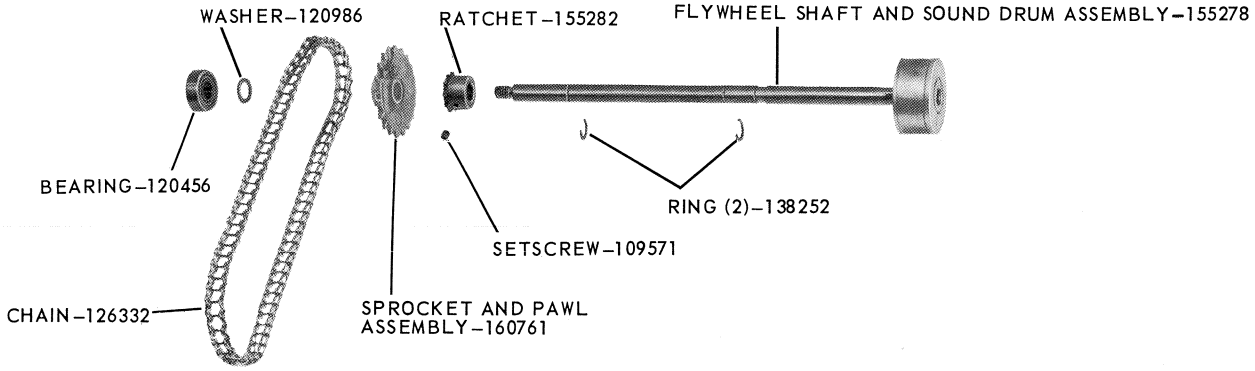

FIGURE 35

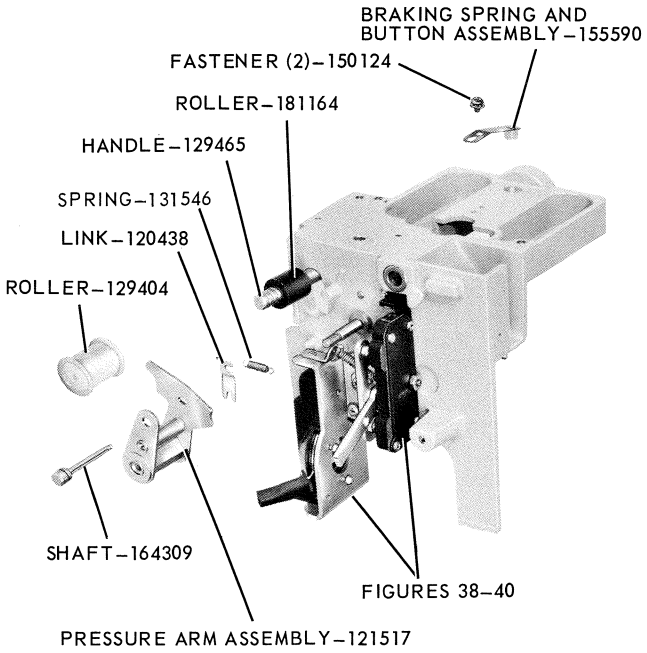

FIGURE 36

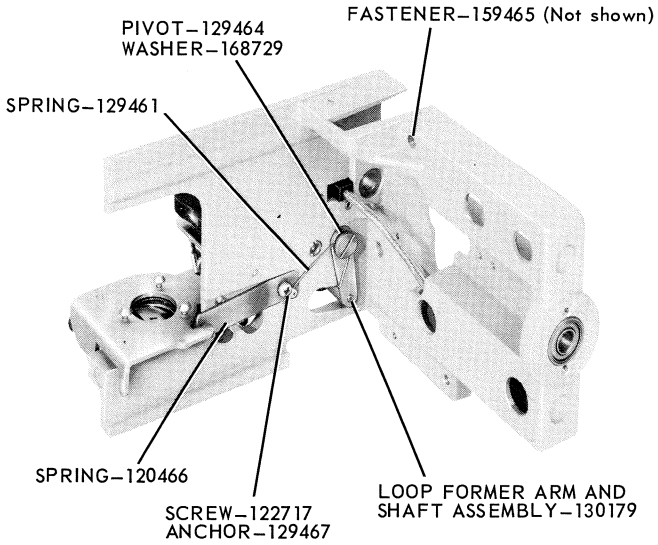

FIGURE 37

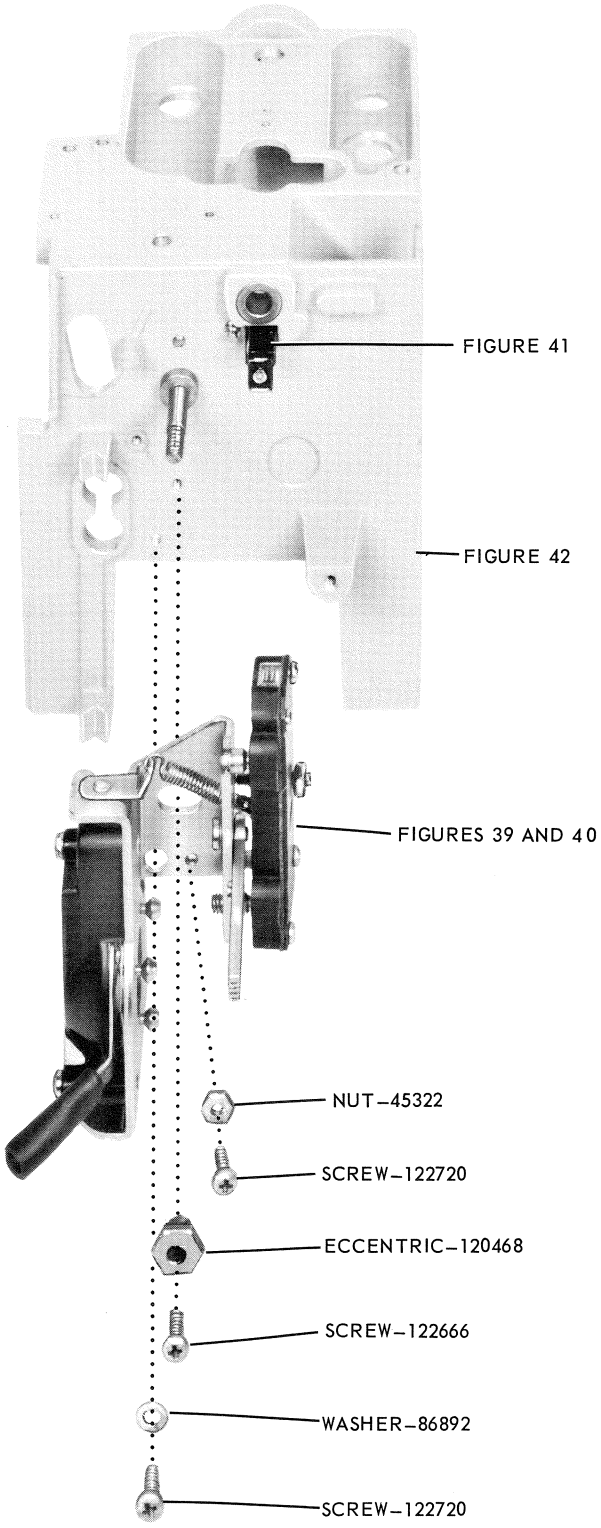

FIGURE 38

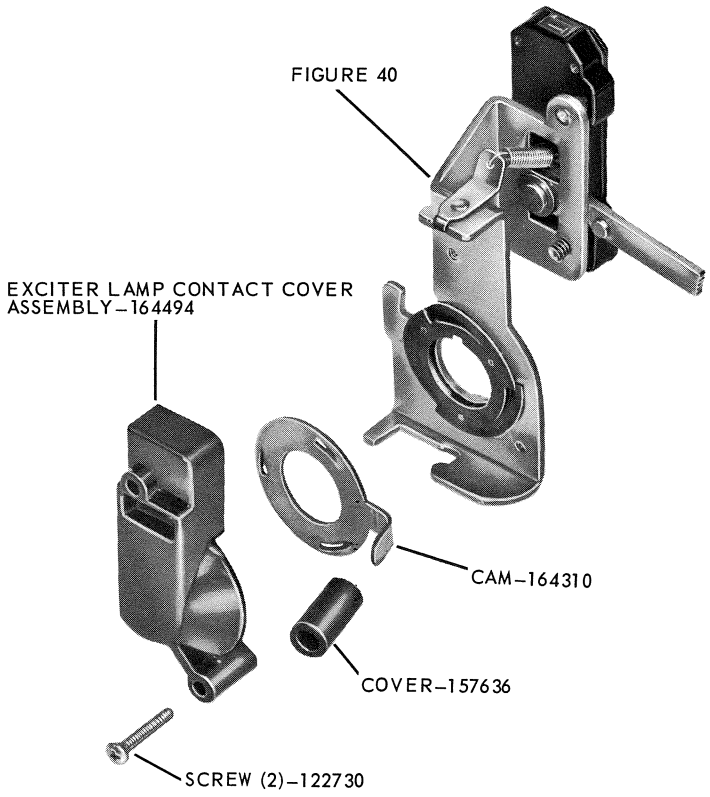

FIGURE 39

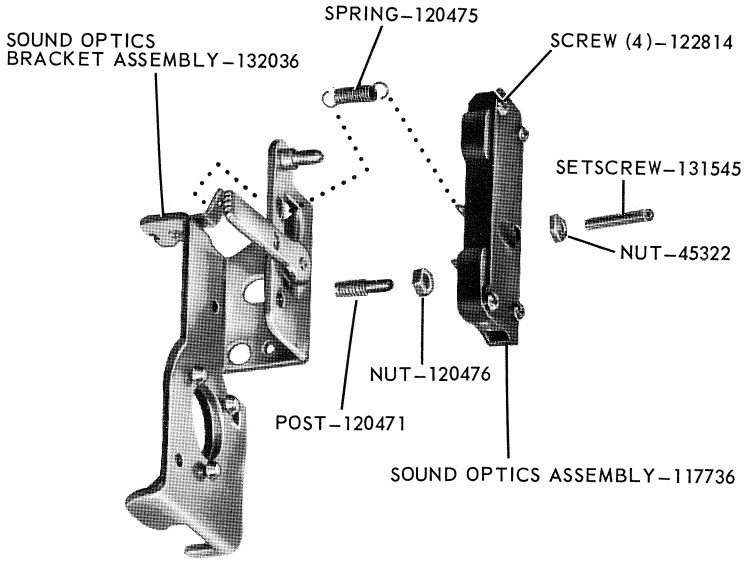

FIGURE 40

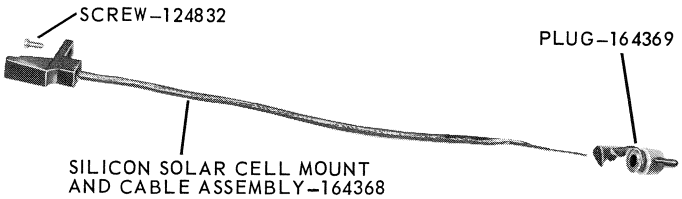

FIGURE 41

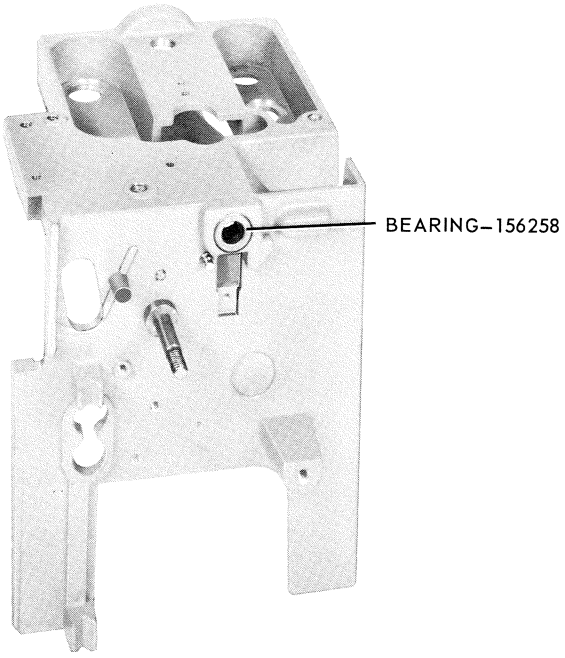

FIGURE 42 SOUND HEAD BRACKET ASSEMBLY – 181006

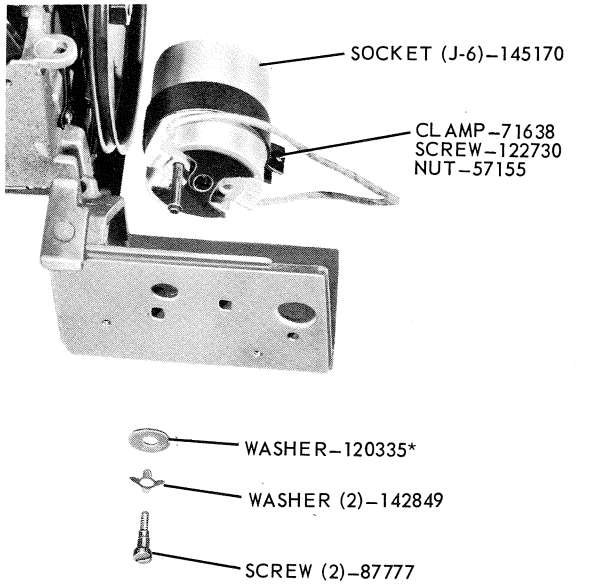

FIGURE 43

*Quantity used may vary

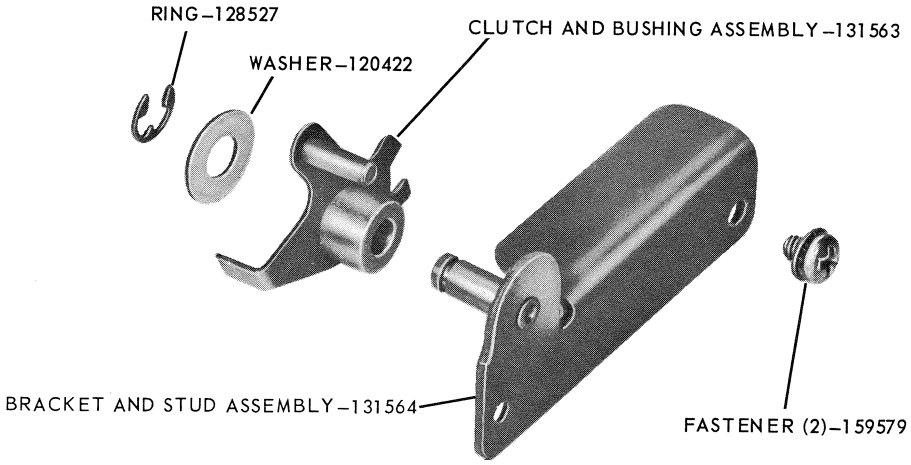

FIGURE 44

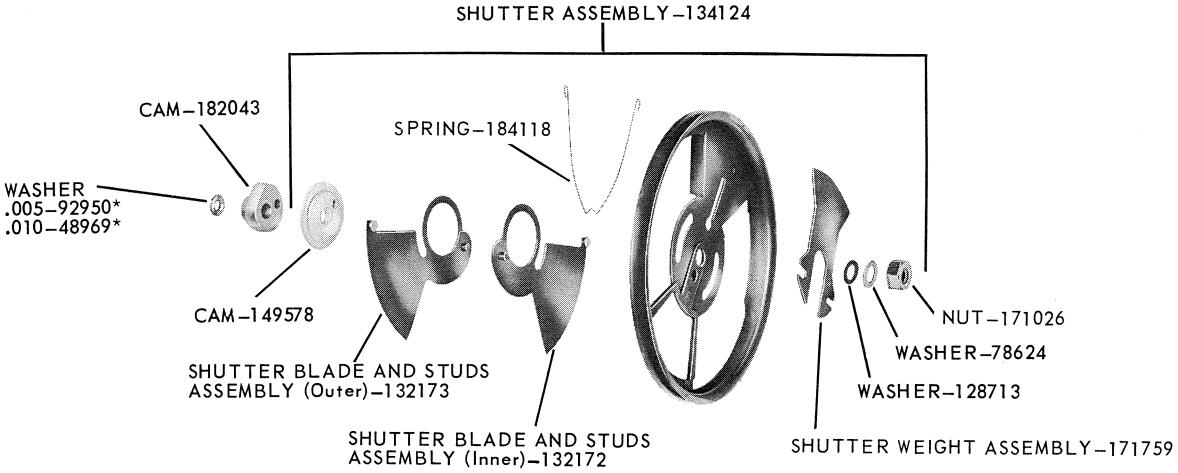

FIGURE 45

*Quantity used may vary

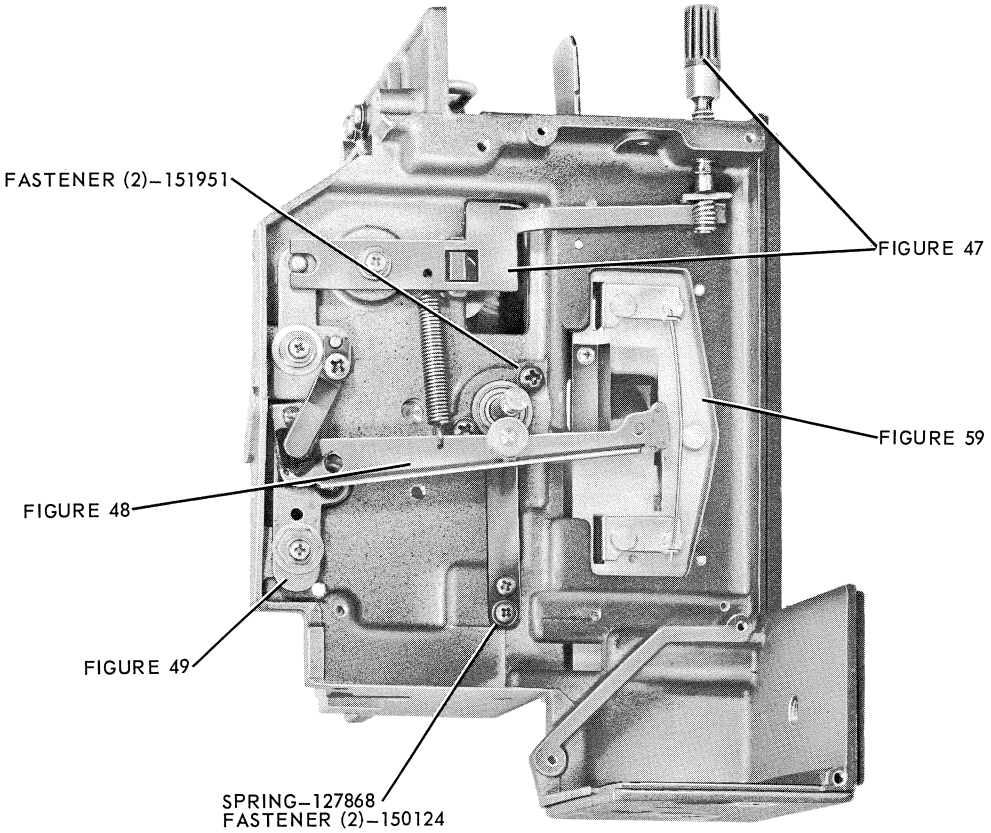

FIGURE 46

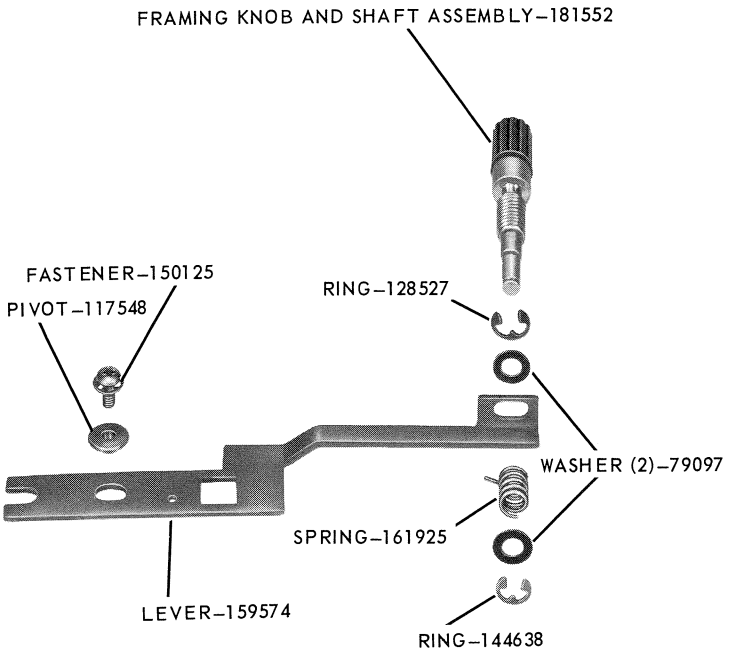

FIGURE 47

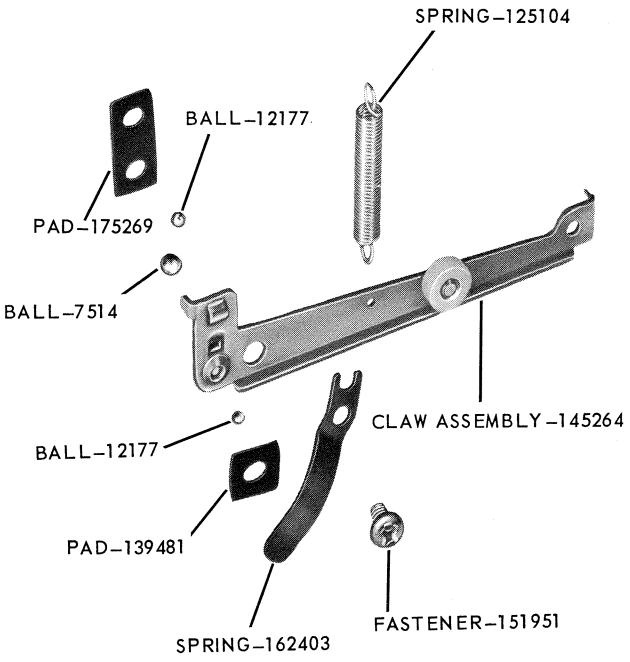

FIGURE 48

Always give PART NUMBER and NAME when ordering parts

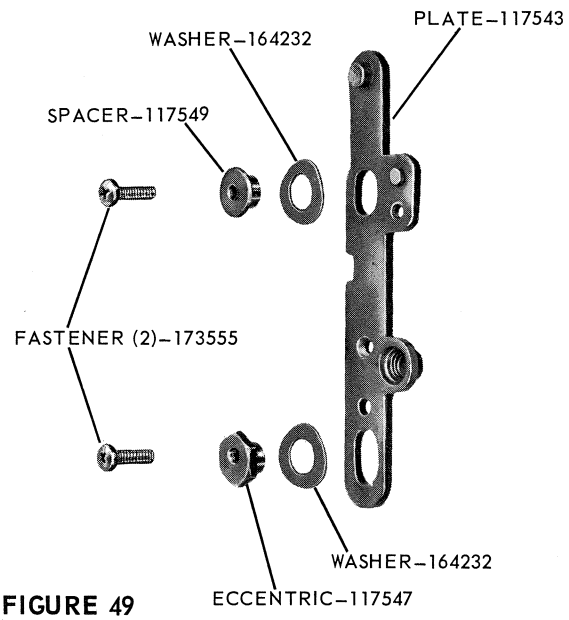

FIGURE 49

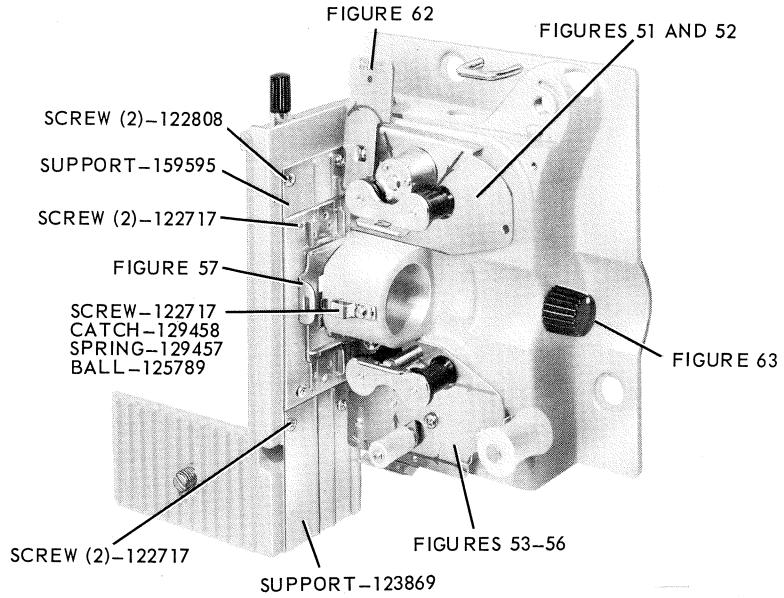

FIGURE 50

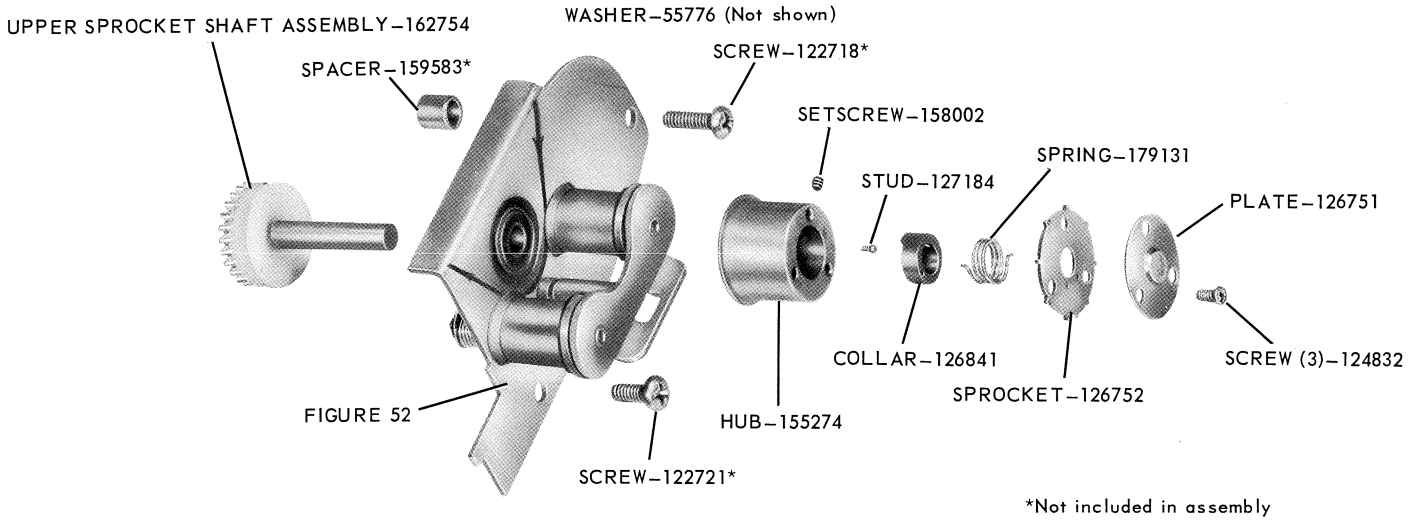

FIGURE 51 UPPER SPROCKET PLATE ASSEMBLY – 181056

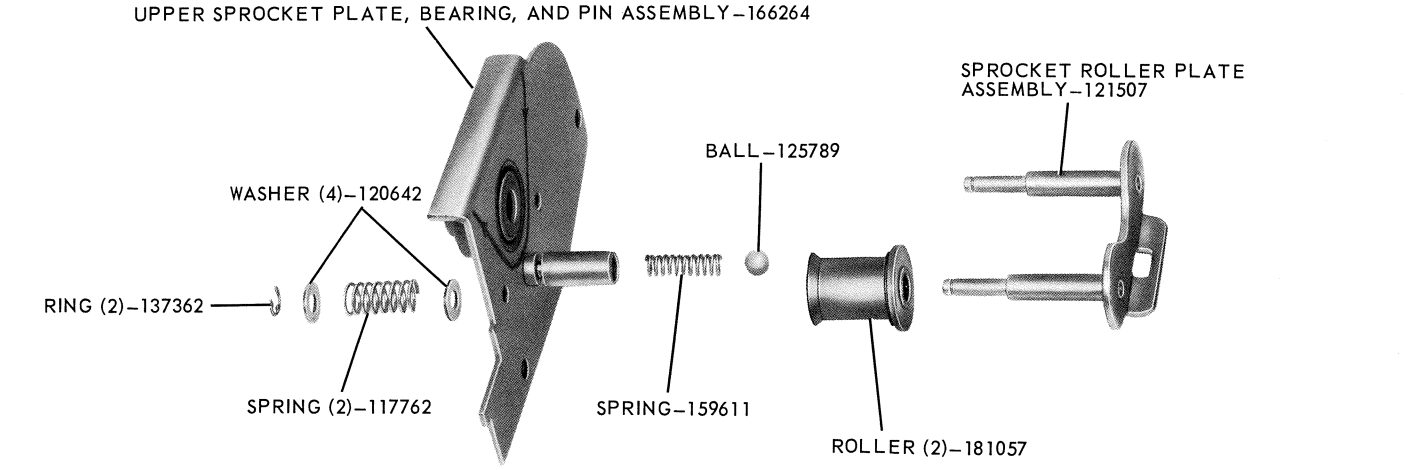

FIGURE 52

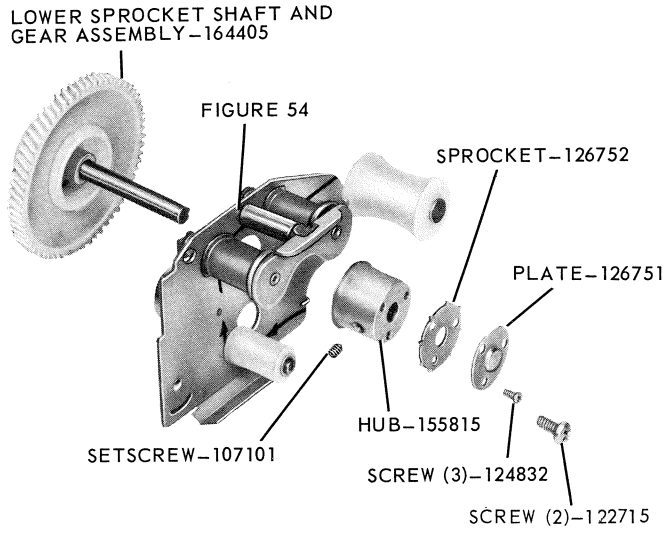

FIGURE 53

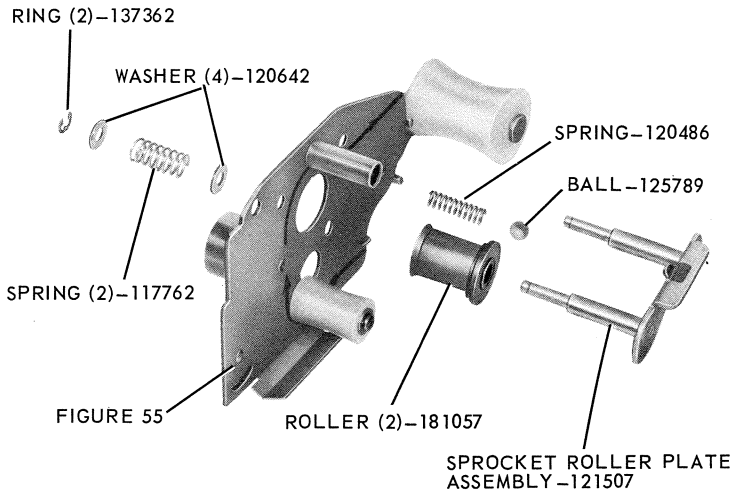

FIGURE 54 LOWER SPROCKET PLATE ASSEMBLY – 181055

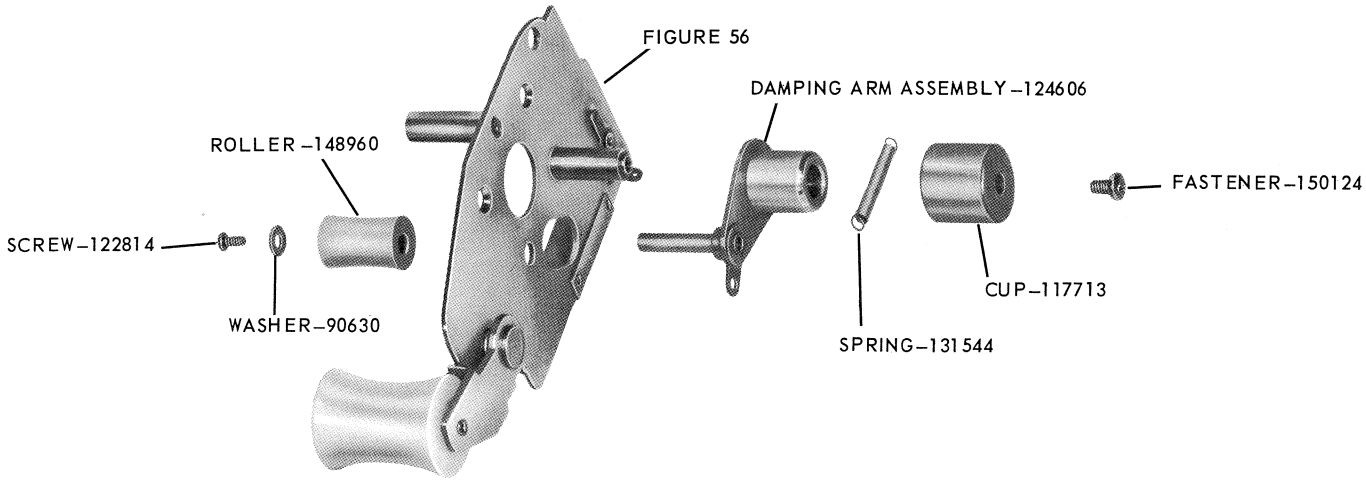

FIGURE 55

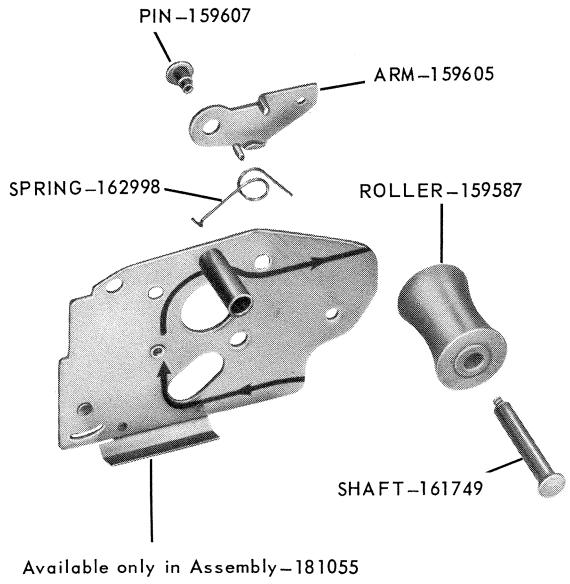

FIGURE 56

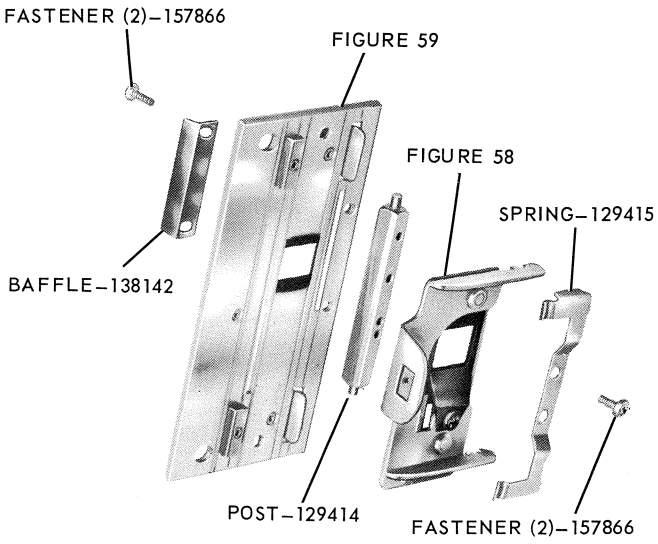

FIGURE 57 APERTURE PLATE AND PAD ASSEMBLY – 166489

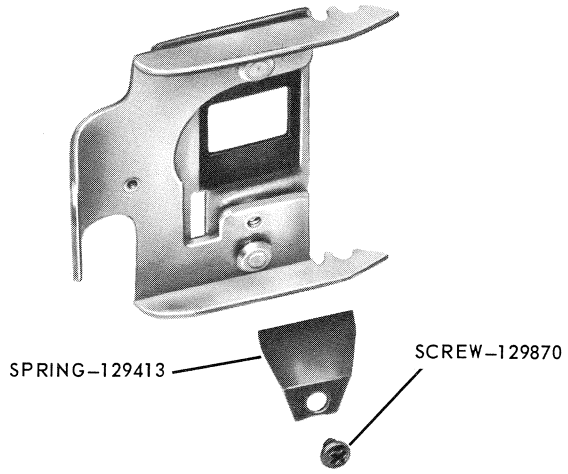

FIGURE 58 PRESSURE PAD ASSEMBLY – 166488

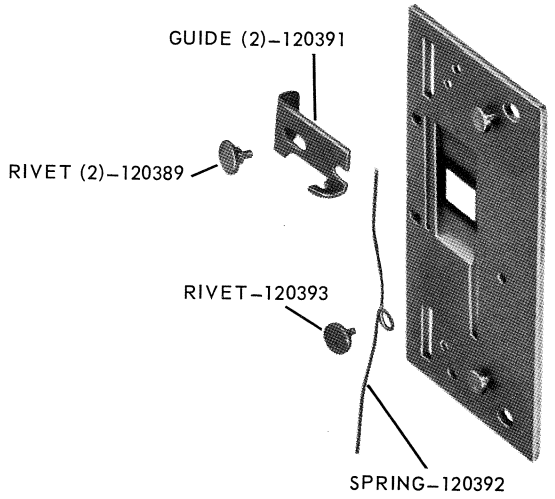

FIGURE 59 APERTURE PLATE ASSEMBLY – 138144

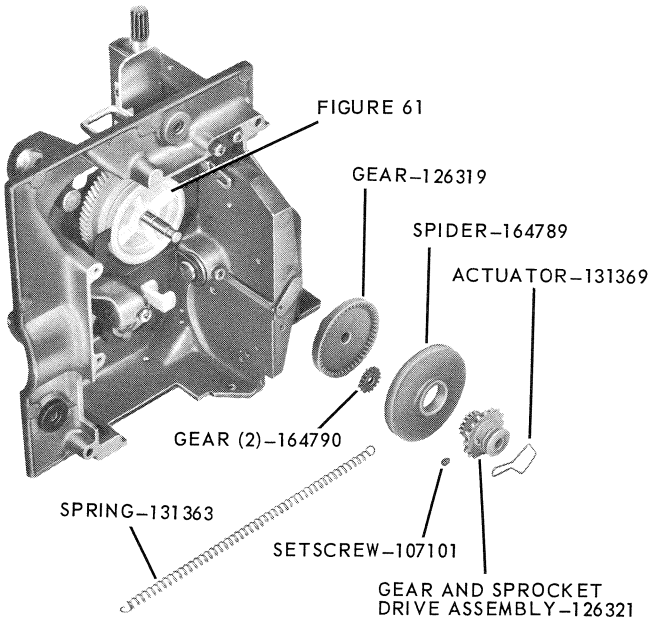

FIGURE 60

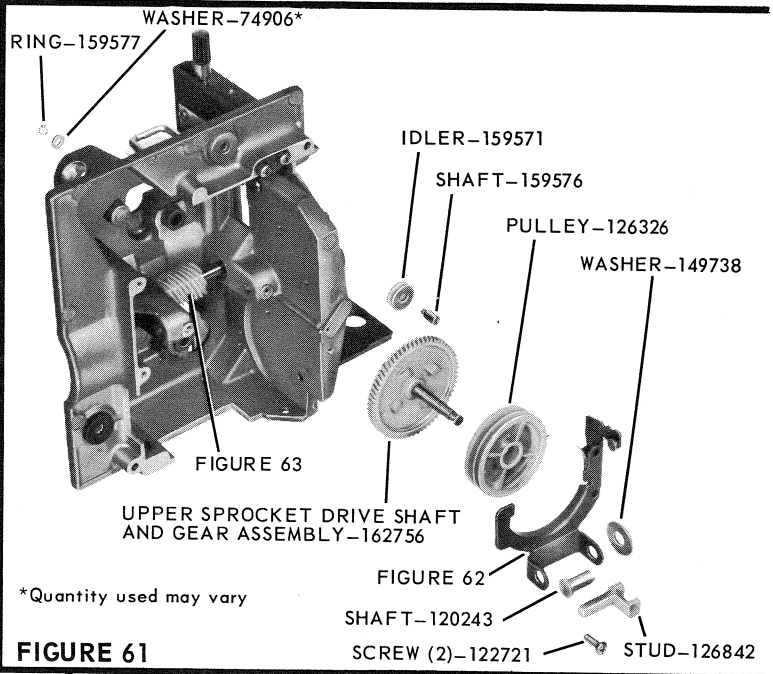

FIGURE 61

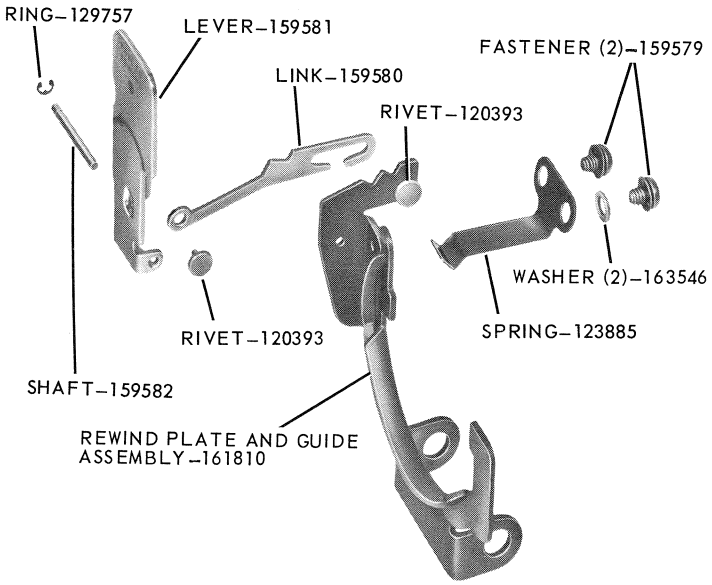

FIGURE 62

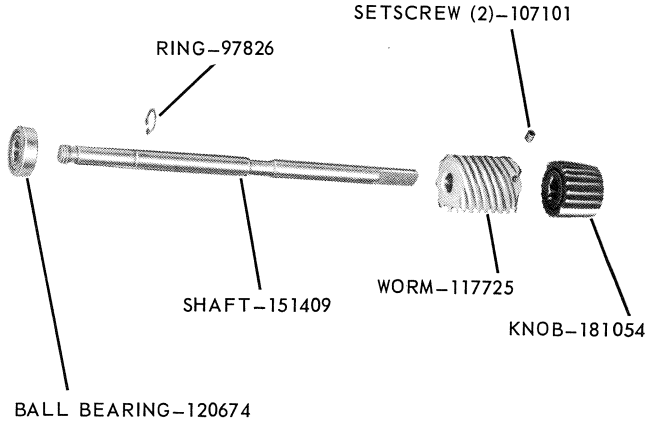

FIGURE 63

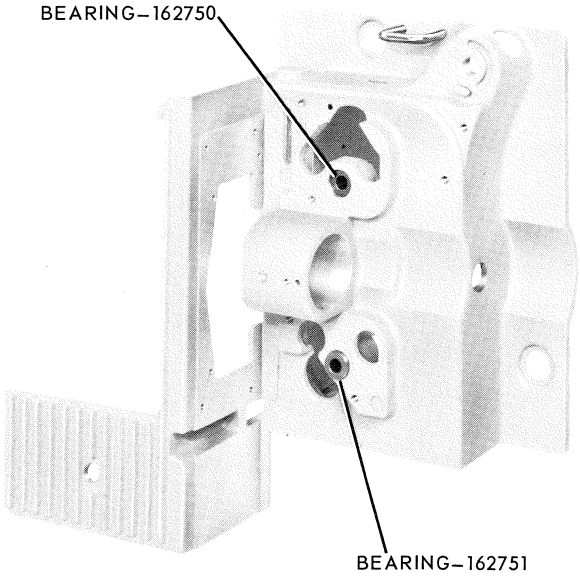

FIGURE 64 MECHANISM HOUSING ASSEMBLY – 181004

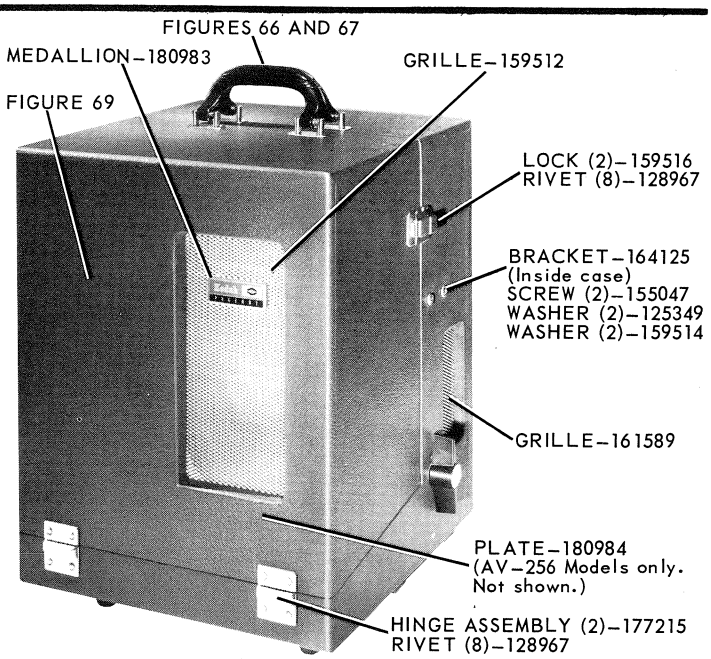

FIGURE 65 CASE ASSEMBLY – 181553 (AV–126–TR)
– 181554 (AV–256–TR)
– 182489 (AV–126–TR-R)
– 182490 (AV–256–TR-R)

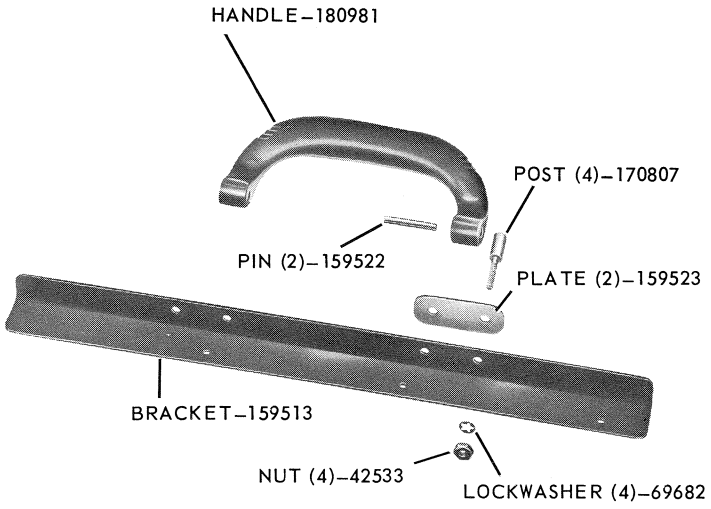

FIGURE 66

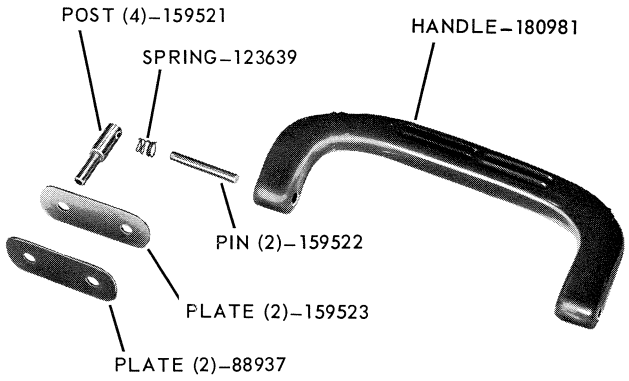

FIGURE 67

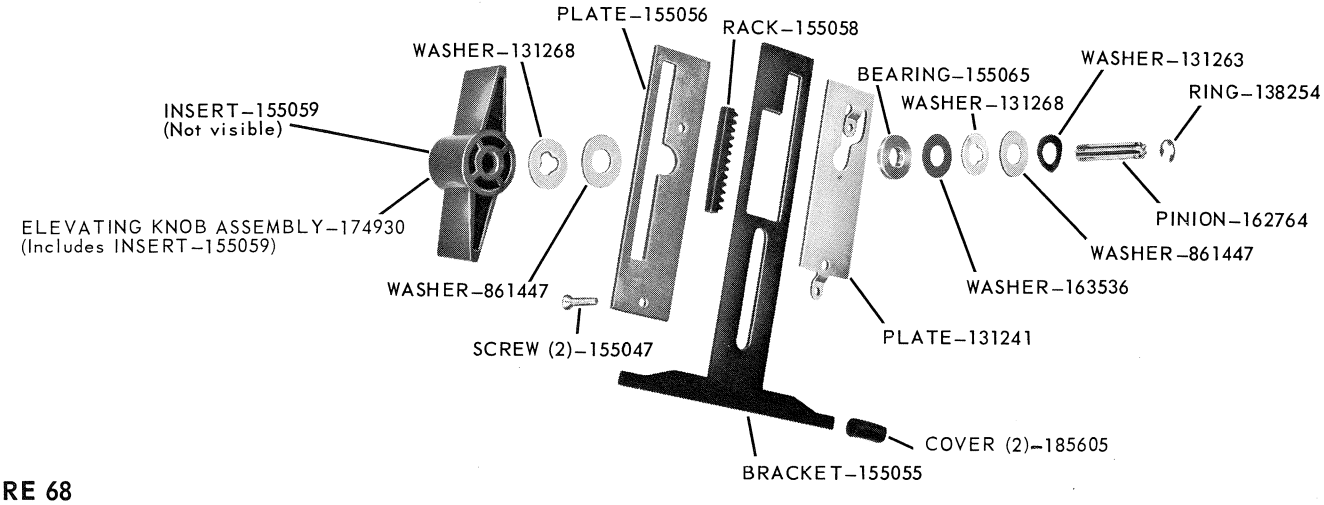

FIGURE 68

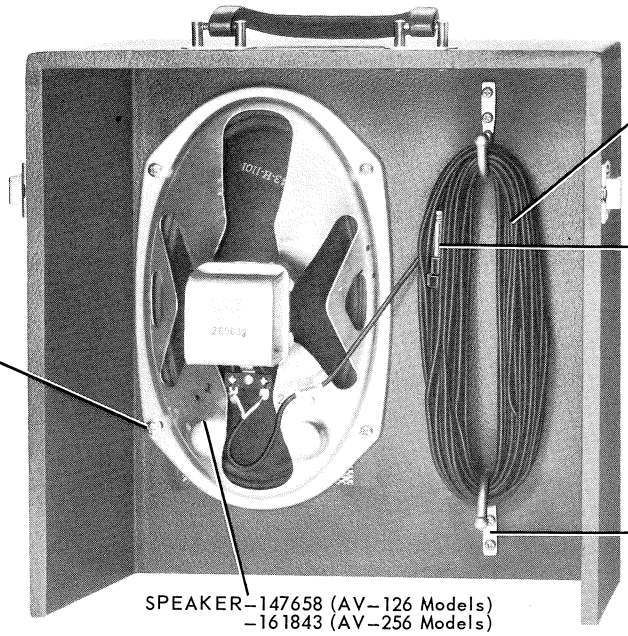

FIGURE 69

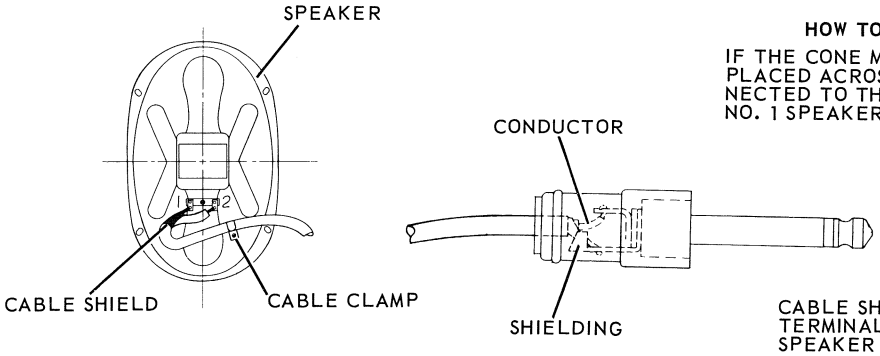

HOW TO DETERMINE NO. 1 SPEAKER TERMINAL

IF THE CONE MOVES FORWARD WHEN A FLASHLIGHT BATTERY IS PLACED ACROSS THE SPEAKER TERMINALS, THE TERMINAL CONNECTED TO THE POSITIVE POLE OF THE BATTERY WILL BE THE NO. 1 SPEAKER TERMINAL

IMPORTANT

CABLE SHIELD MUST ALWAYS BE CONNECTED TO SPEAKER TERMINAL NO. 1. THE LOCATION OF THE NO. 1 AND NO. 2 SPEAKER TERMINALS MAY BE REVERSED FROM THOSE SHOWN.

FIGURE 70 SPEAKER AND CABLE WIRING DIAGRAM (FEBRUARY 1968)

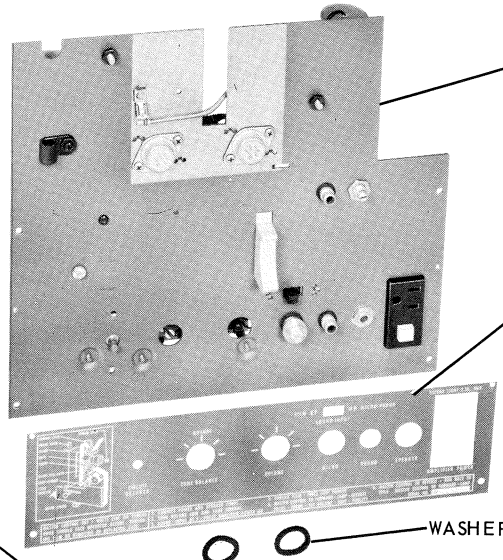

*Old plate must be returned to Kodak before a new plate will be supplied.

FIGURE 71

AV-126 MODELS

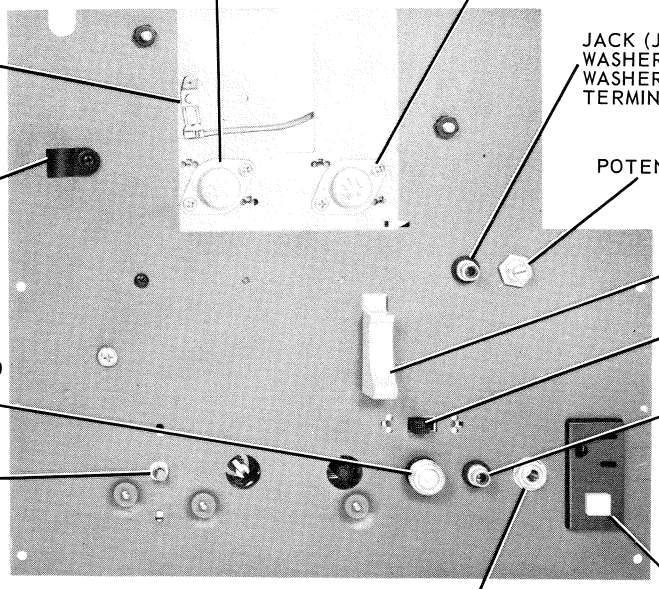

*TR-R only

FIGURE 72 AMPLIFIER ASSEMBLY – 181059 (AV–126–TR)
– 181148 (AV–126–TR-R)

AV-126 MODELS

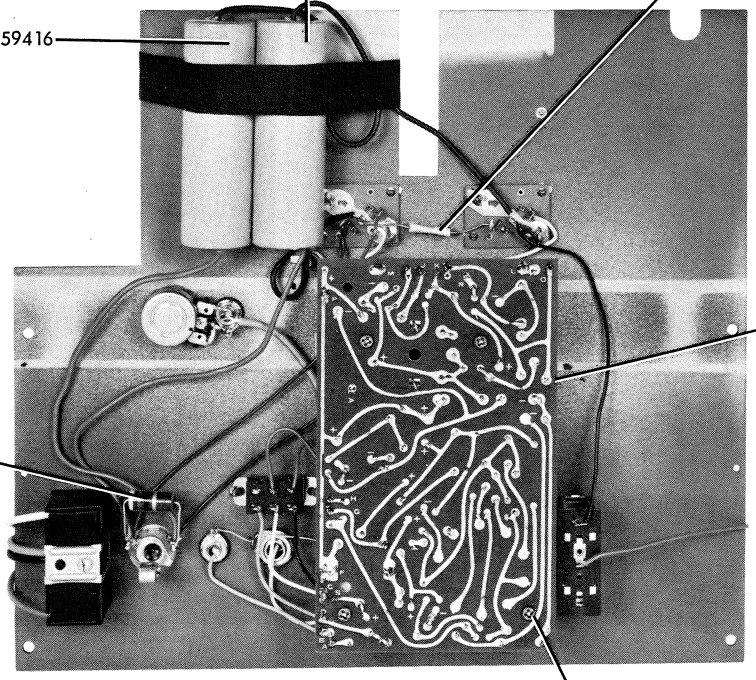

FIGURE 73

AV-126 MODELS

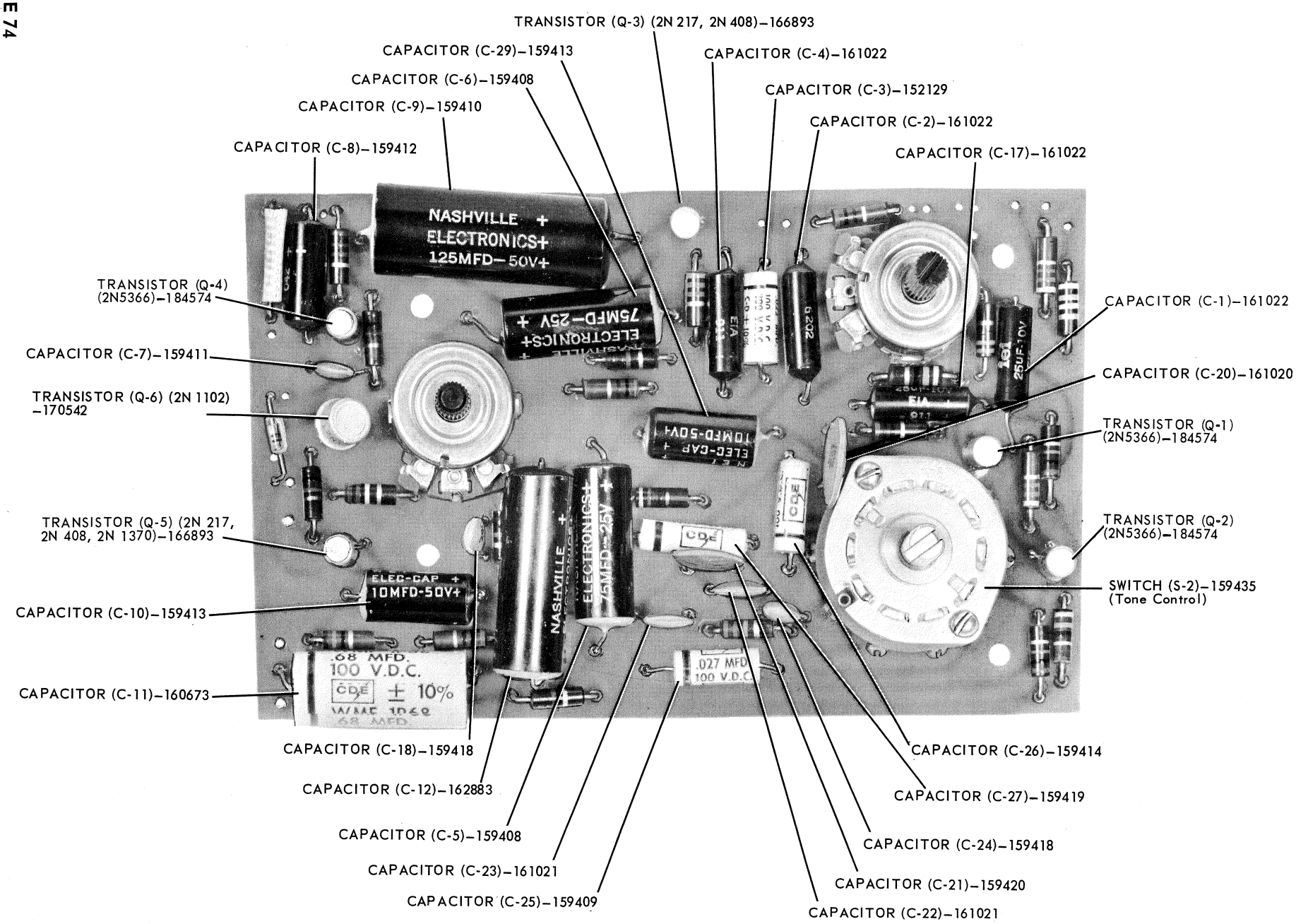

AMPLIFIER COMPONENT BOARD ASSEMBLY – 159436 (Also see Figure 75)

FIGURE 74

FIGURE 75

AV-126 MODELS

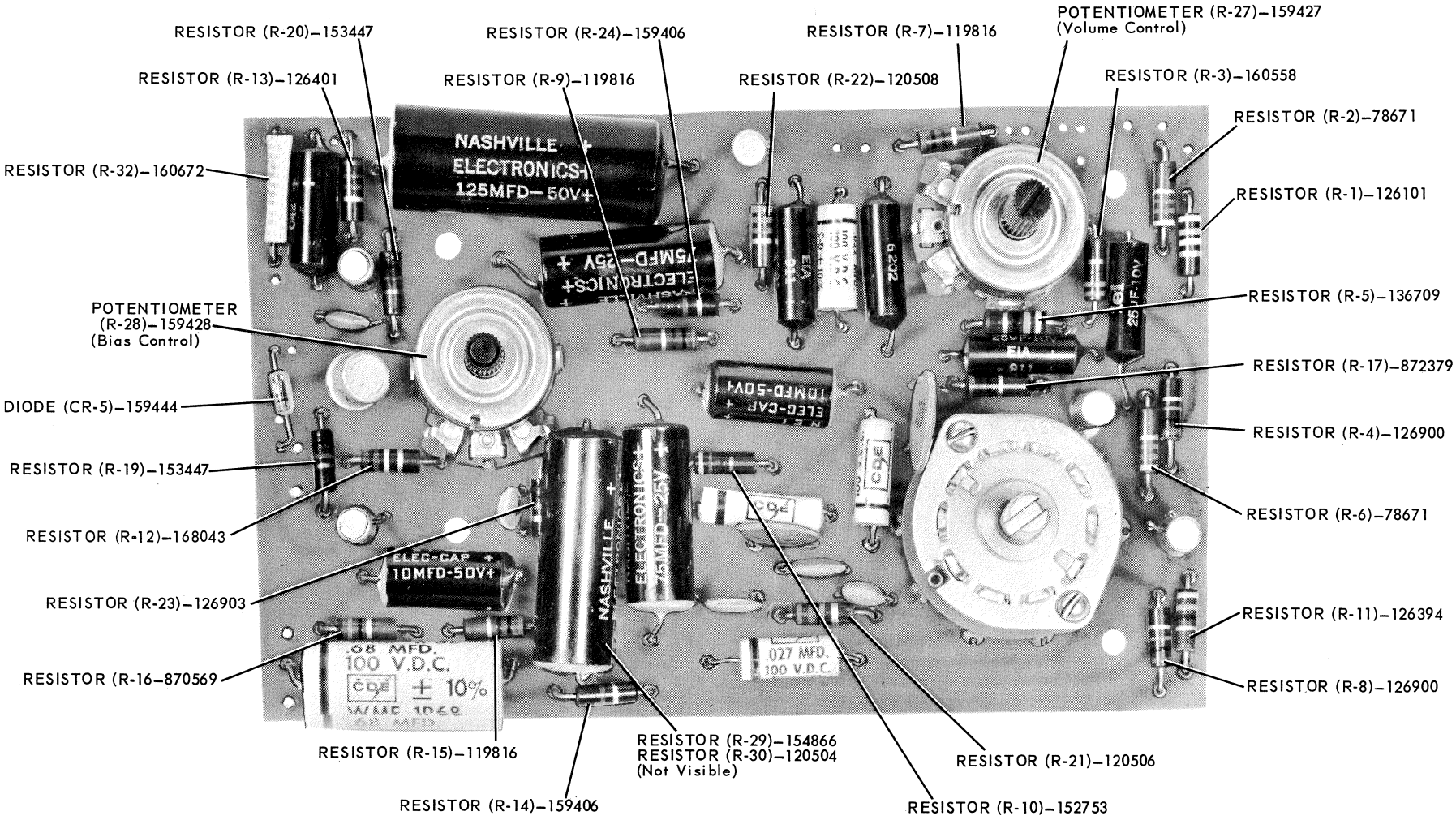

AMPLIFIER COMPONENT BOARD ASSEMBLY – 159436

AV-256 MODELS

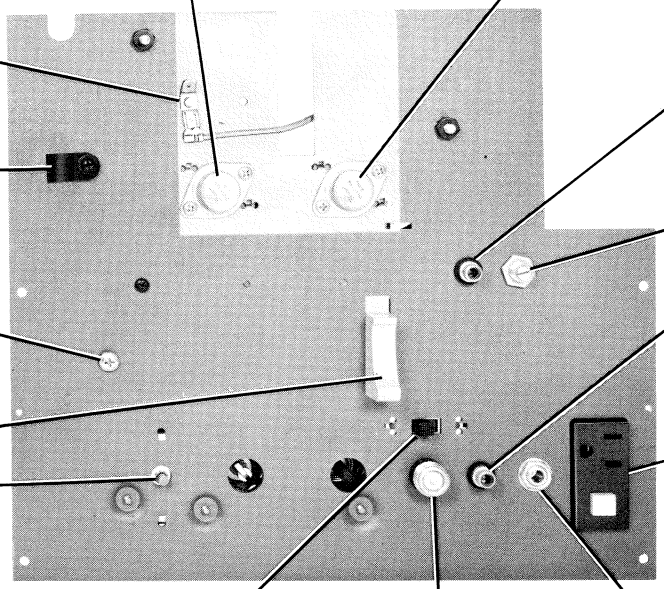

*TR-R only

FIGURE 76 AMPLIFIER ASSEMBLY – 181895 (AV–256–TR)
– 181147 (AV–256–TR-R)

AV-256 MODELS

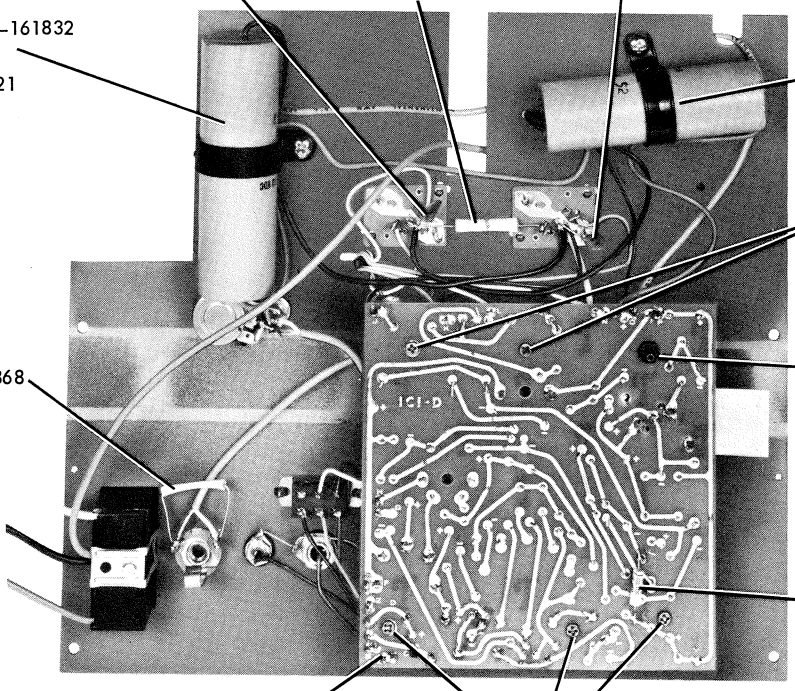

FIGURE 77

FIGURE 78

AV-256 MODELS

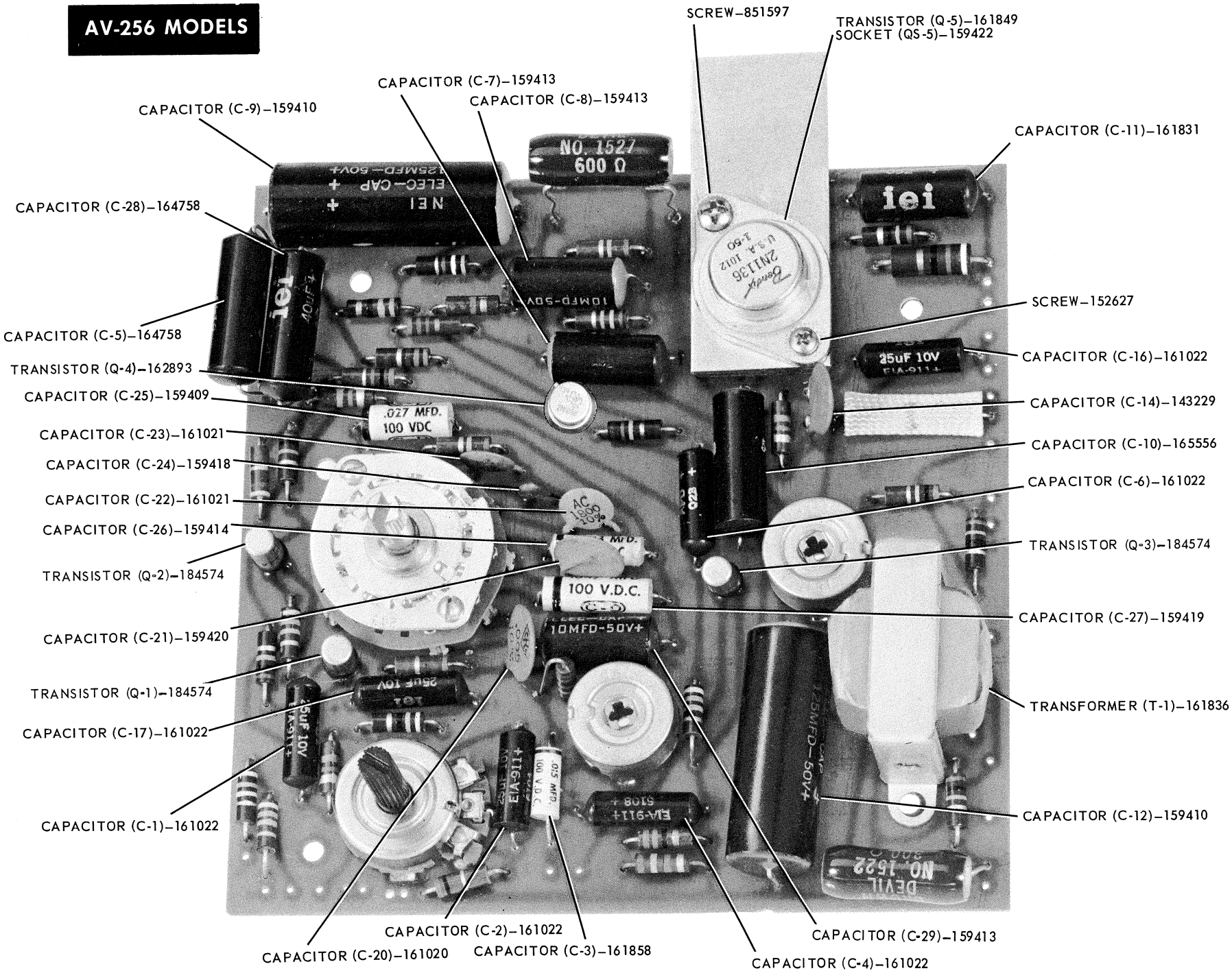

AMPLIFIER COMPONENT BOARD ASSEMBLY – 161841

FIGURE 79

AV-256 MODELS

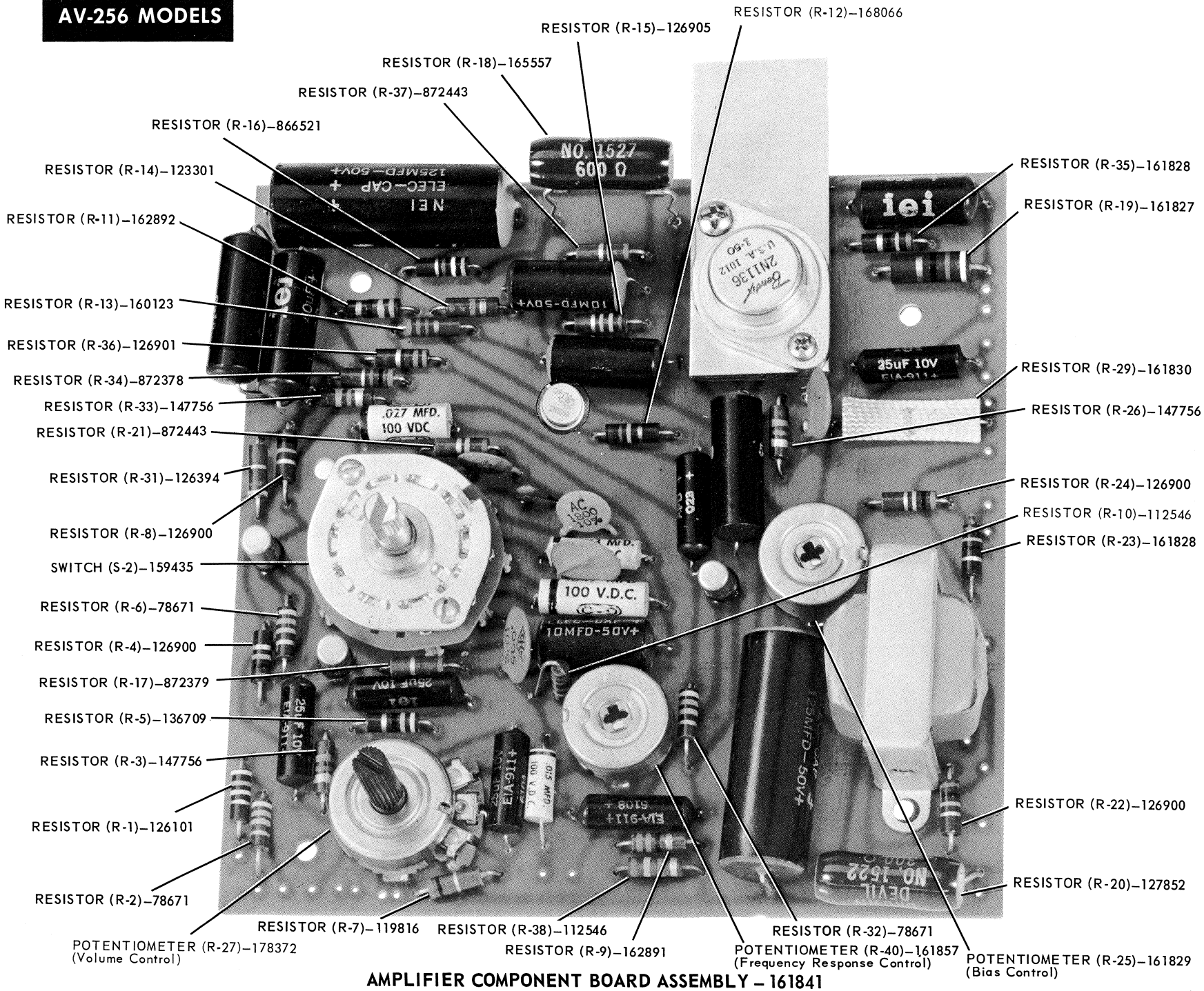

AMPLIFIER COMPONENT BOARD ASSEMBLY – 161841

TR MODELS

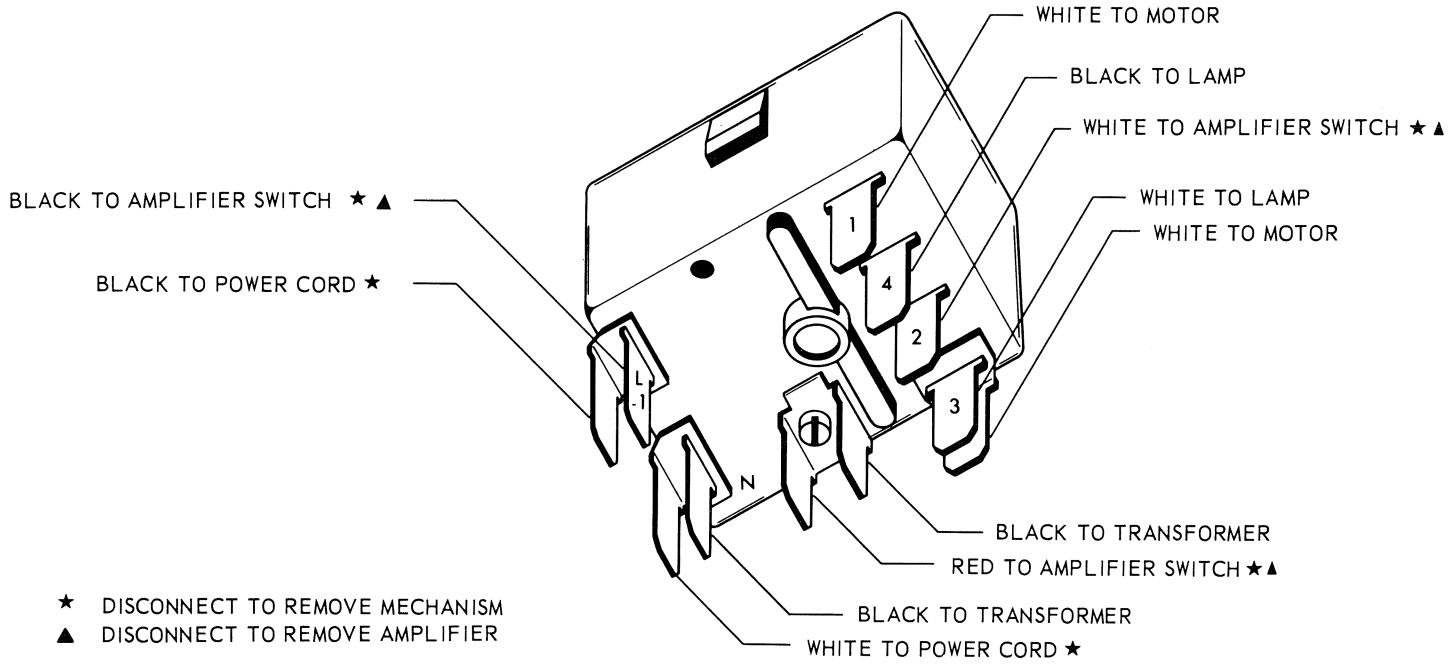

WIRING HOOKUP (FEBRUARY 1968)
FOR
SWITCH (S-3)

FIGURE 80

TR-R MODELS

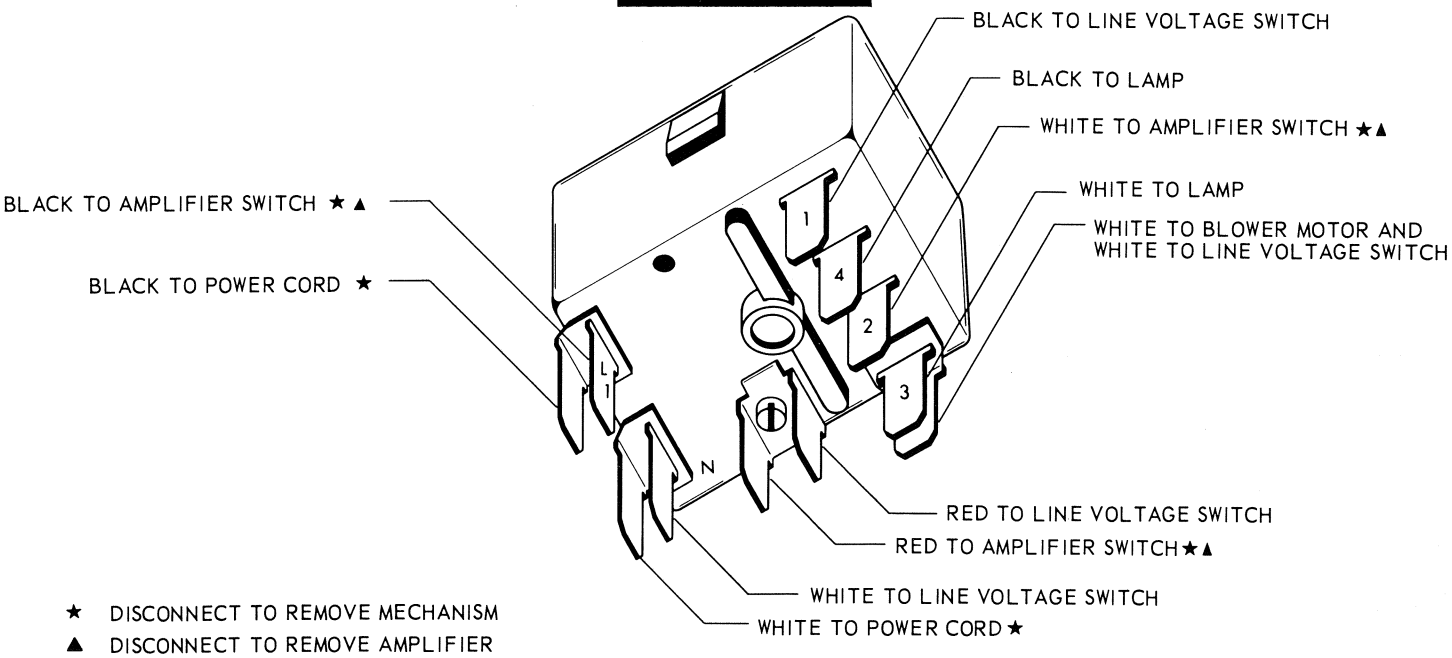

WIRING HOOKUP (FEBRUARY 1968)
FOR
SWITCH (S-3)

FIGURE 81

AV-126 MODELS

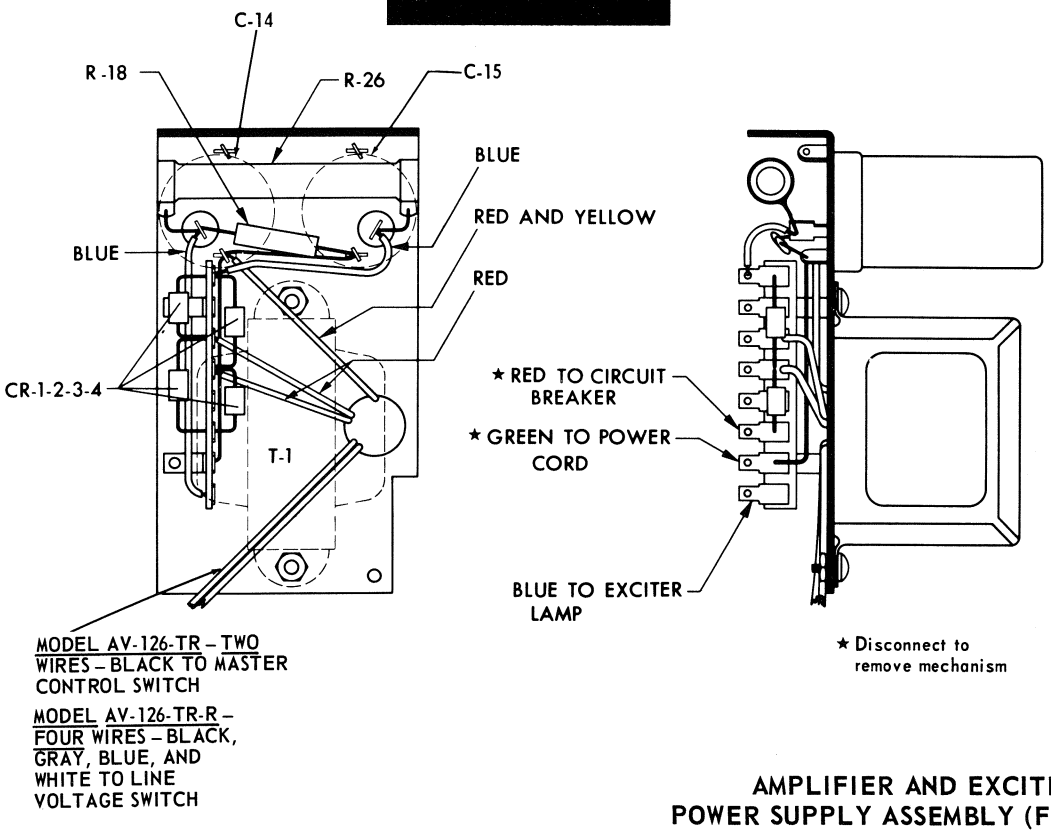

FIGURE 82

AMPLIFIER AND EXCITER LAMP POWER SUPPLY ASSEMBLY (FEBRUARY 1968)

AV-256 MODELS

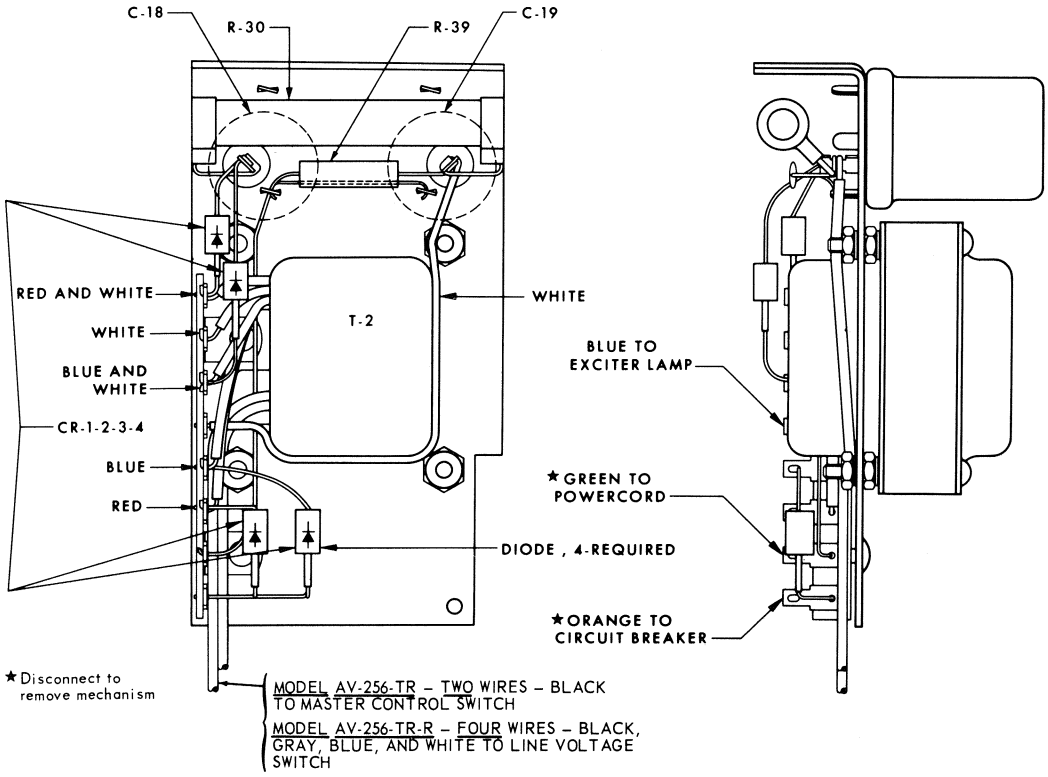

FIGURE 83

AMPLIFIER AND EXCITER LAMP POWER SUPPLY ASSEMBLY (FEBRUARY 1968)

TR MODELS

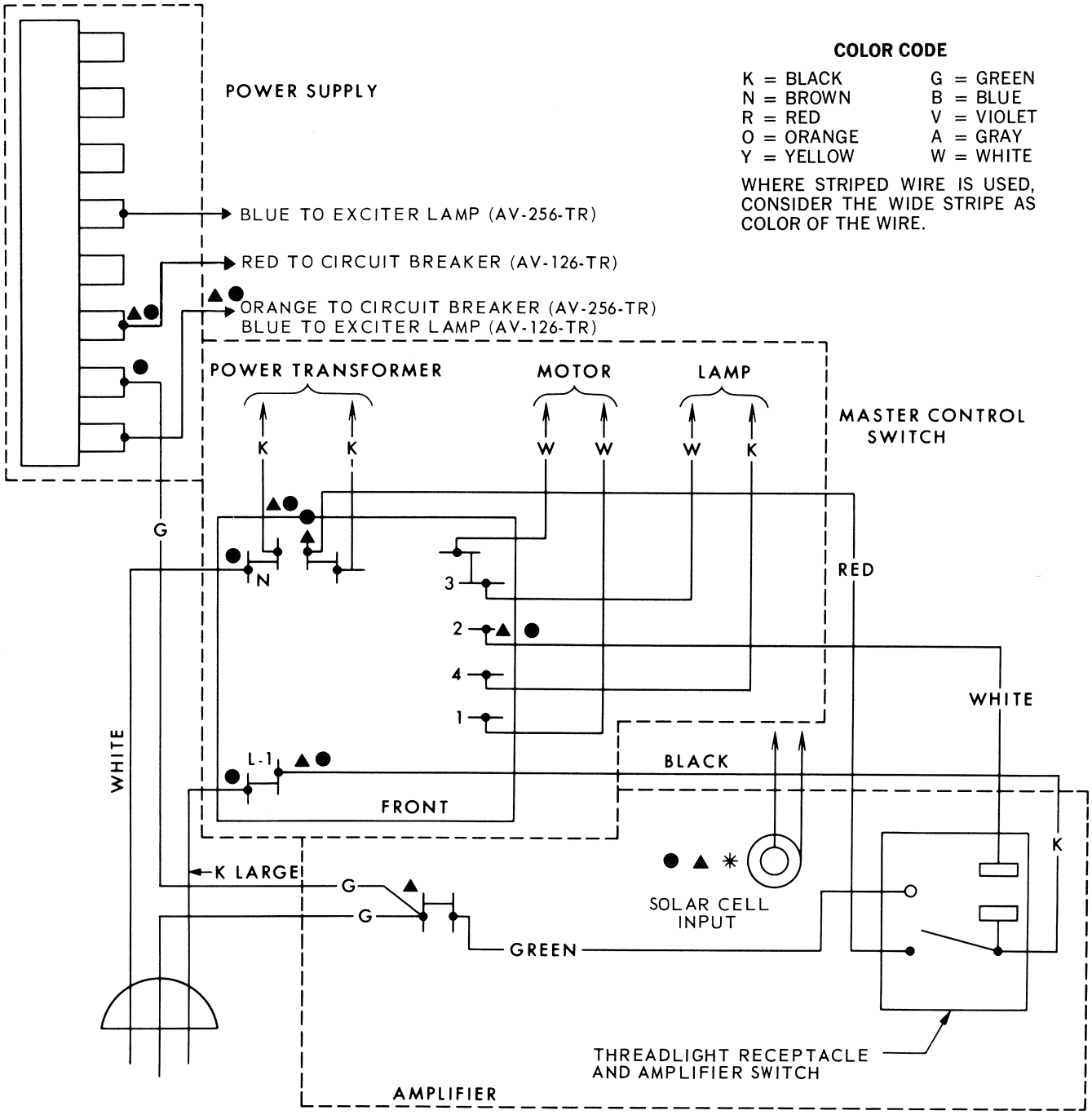

✳ DISCONNECT TO REMOVE AMPLIFIER (AMPLIFIER WILL STILL OPERATE)

▲ DISCONNECT TO REMOVE AMPLIFIER COMPLETELY

● DISCONNECT TO REMOVE MECHANISM

SWITCH AND TERMINAL CONNECTIONS (FEBRUARY 1968)

FIGURE 84

TR-R MODELS

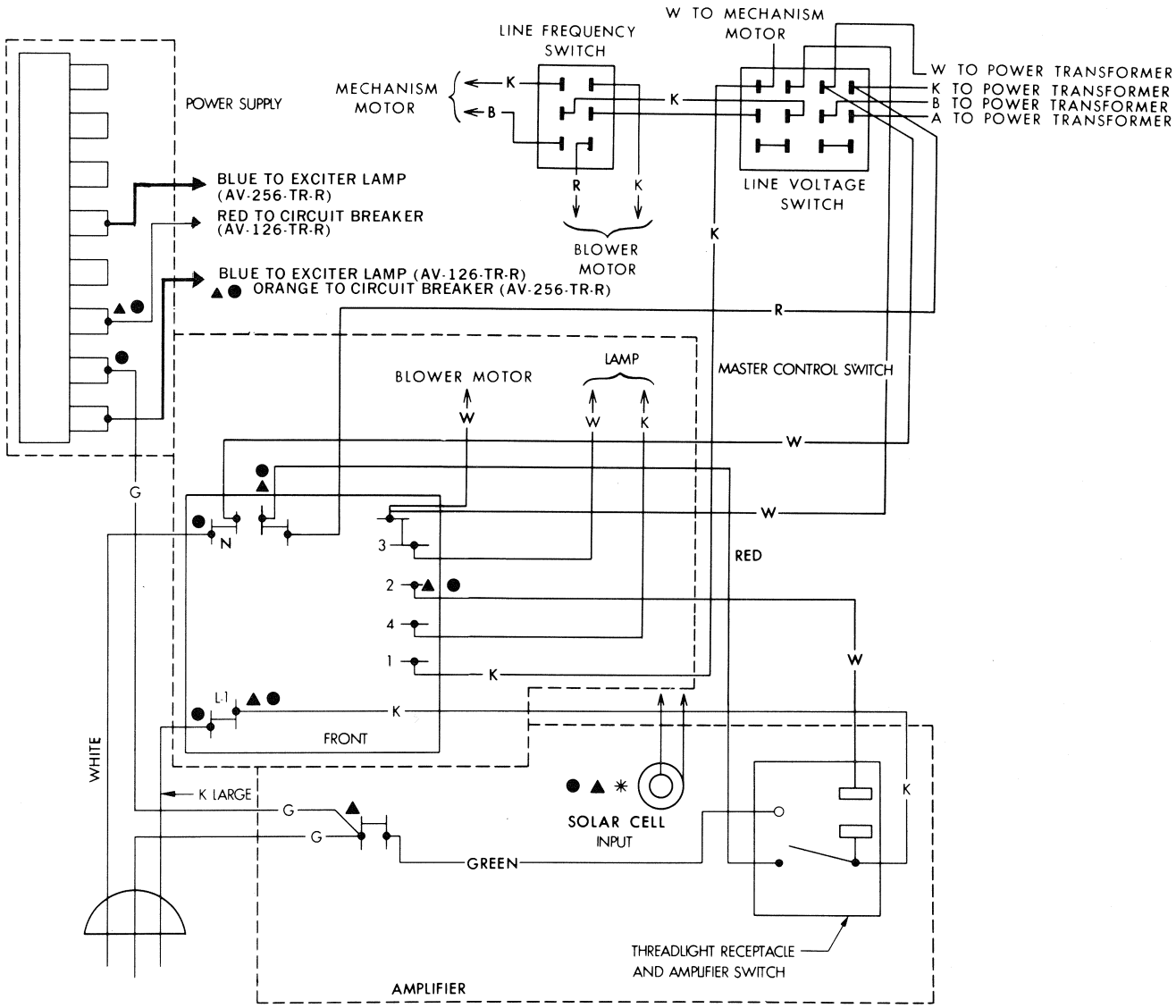

✳ DISCONNECT TO REMOVE AMPLIFIER (AMPLIFIER WILL STILL OPERATE)
▲ DISCONNECT TO REMOVE AMPLIFIER COMPLETELY
● DISCONNECT TO REMOVE MECHANISM

COLOR CODE

K=BLACK	G=GREEN
N=BROWN	B=BLUE
R=RED	V=VIOLET
O=ORANGE	A=GRAY
Y=YELLOW	W=WHITE

SWITCH AND TERMINAL CONNECTIONS (FEBRUARY 1968)

FIGURE 85

AV-126 MODELS

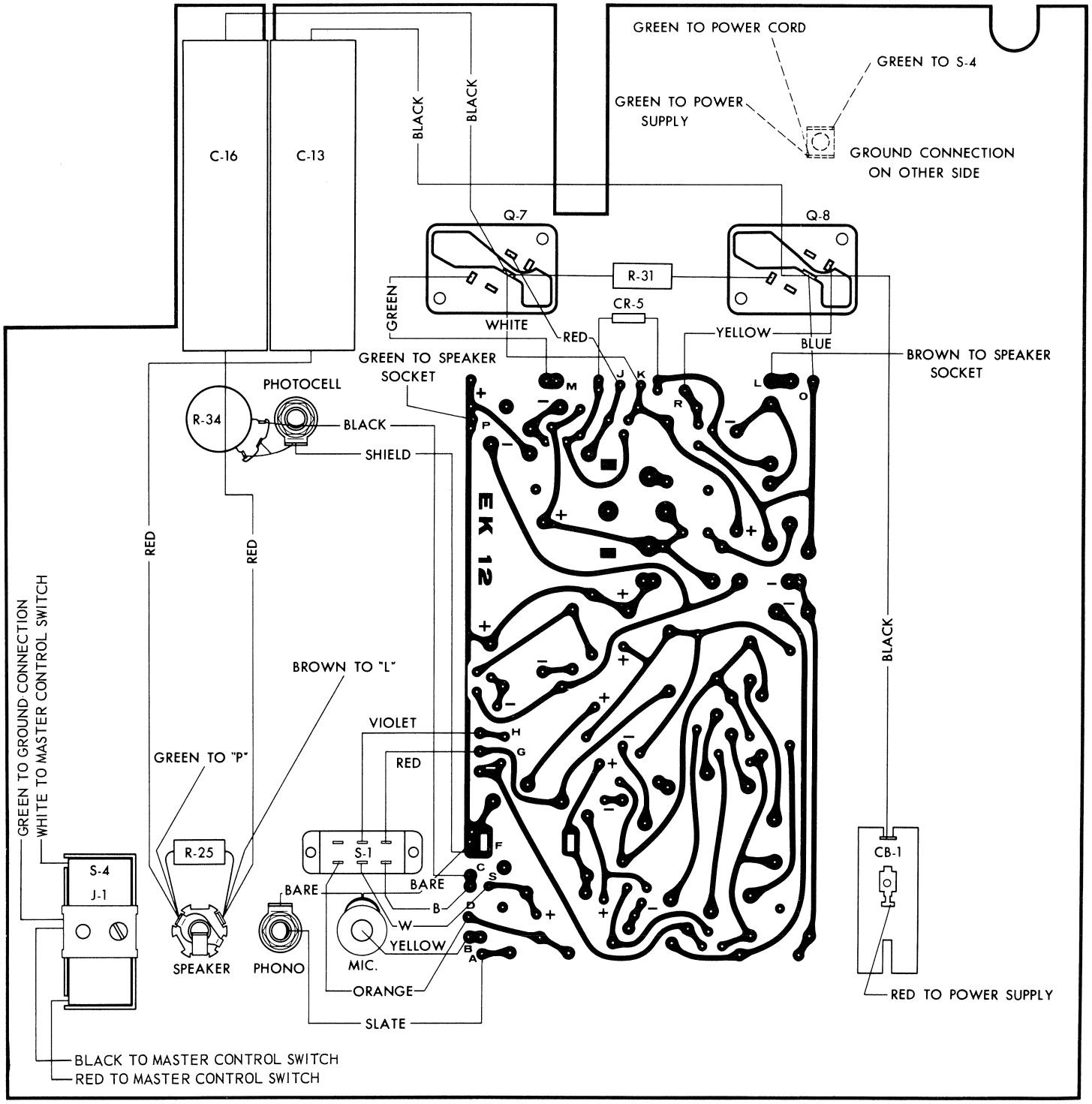

AMPLIFIER WIRING DIAGRAM (FEBRUARY 1968)

FIGURE 86

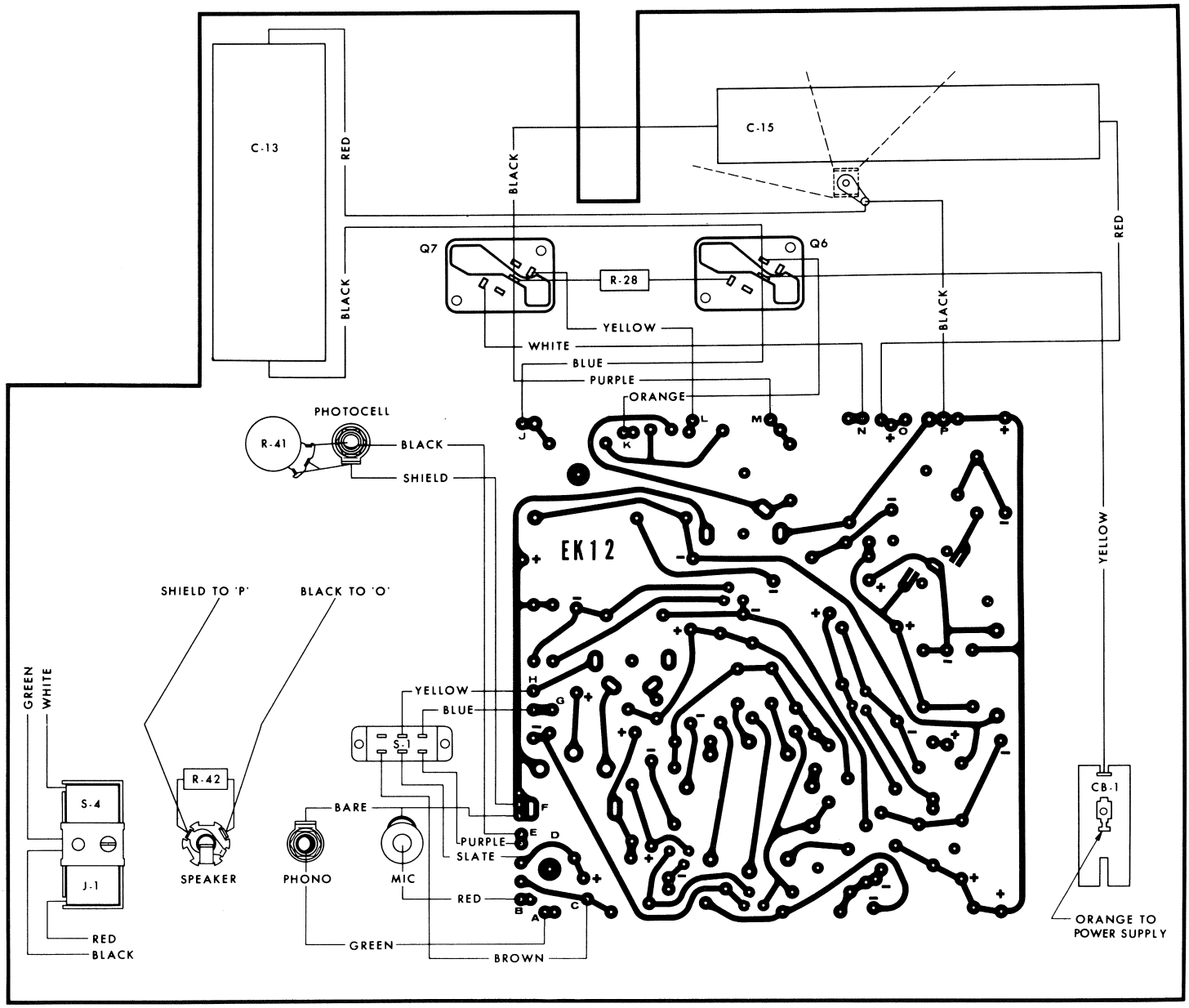

AMPLIFIER WIRING DIAGRAM (FEBRUARY 1968)

FIGURE 87

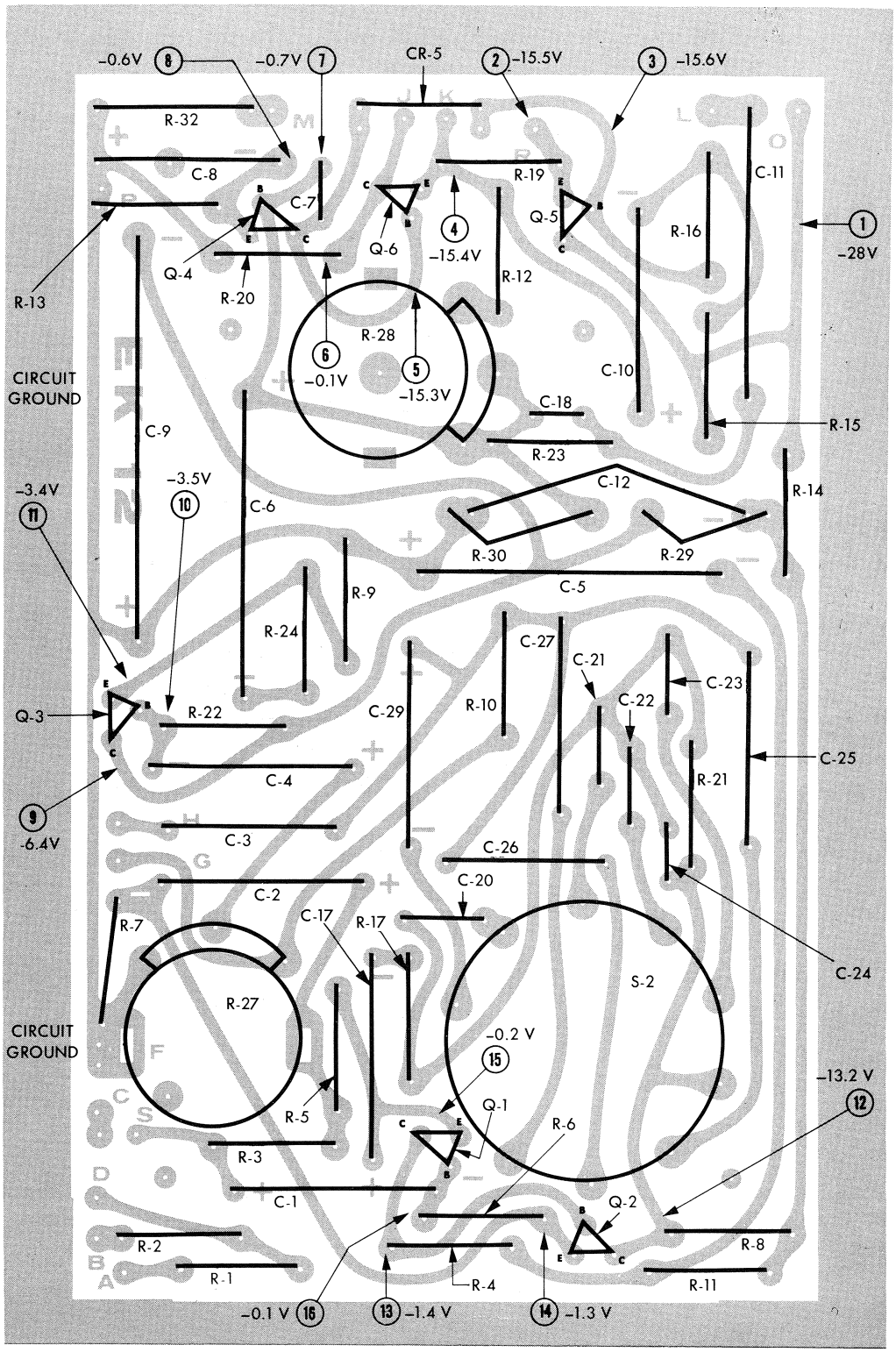

Numbers in circles refer to voltage check points.

AMPLIFIER COMPONENT BOARD
(FEBRUARY 1968)

FIGURE 88

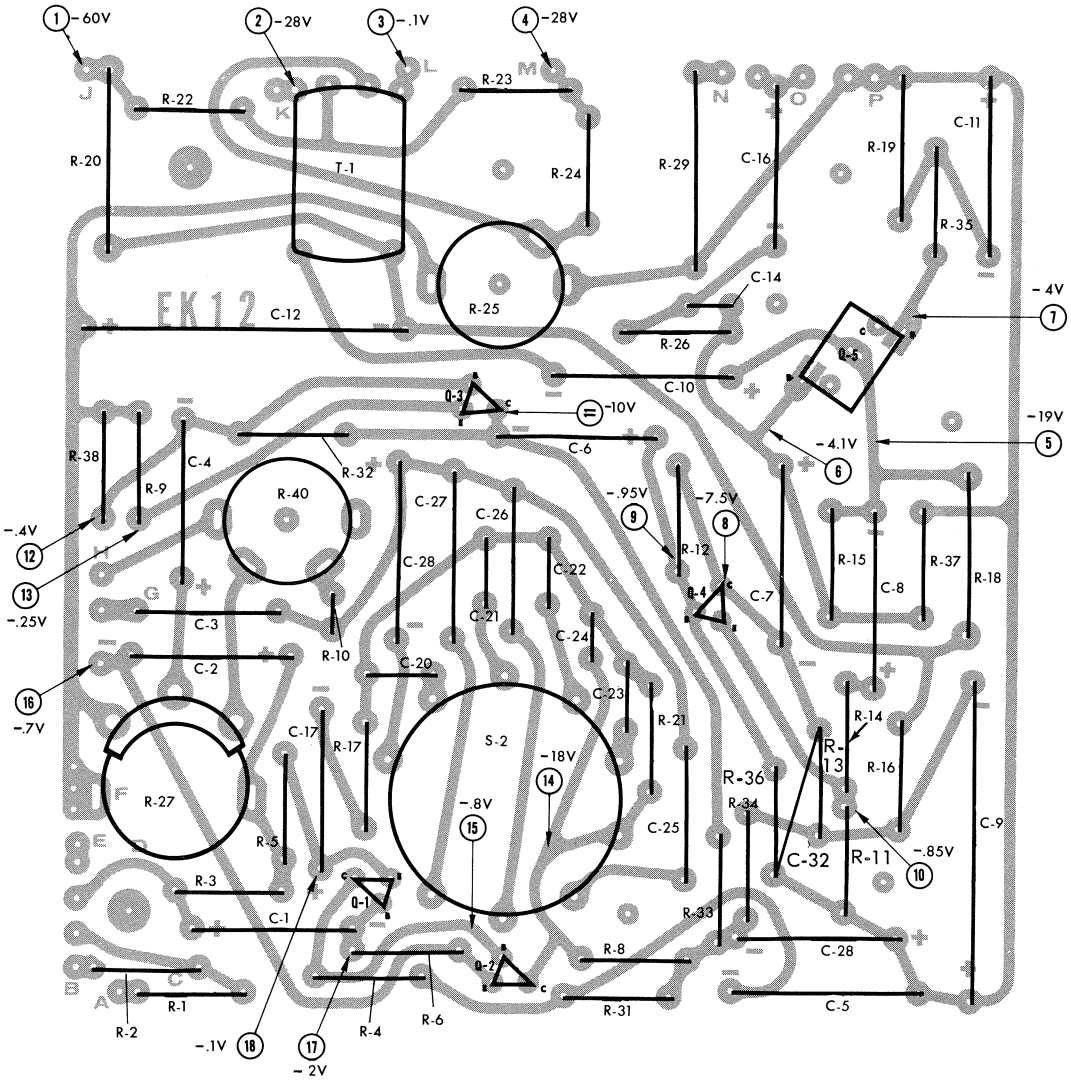

Numbers in circles refer to voltage check points

AMPLIFIER COMPONENT BOARD (FEBRUARY 1968)

FIGURE 89

PART NO.	DESCRIPTION	FIG.
7514	Ball - Carbon steel, 3/16. . . .	48
12177	Ball - Carbon steel, 1/8.	48
13775	Lens - Condenser, rear.	27
25739	Washer - Flywheel shaft (TR-R Models)	13
25883	Ball - Carbon steel, 3/32. . . .	7
26299	Nut - Hex, 8-32 (AV-126 Models)	17
31576	Nut - Hex., 8-32.	9,20
33992	Lockwasher - Int tooth, No. 10	30
37266	Washer - 5/32 x 3/8 x .049 (AV-256 Models).	77
37492	Nut - Hex, 5/16-24	10
42533	Nut - Hex, 6-32	66,77
42745	Nut - Hex, 10-32 (AV-256 Models)	77
42874	Lockwasher - Int tooth, No. 6 .	28,34
45322	Nut - Hex, 4-40	38,40
46236	Washer - Spacer.	10
47317	Lockwasher - Int tooth, No. 8 .	9,17,21
48023	Washer - Spacer.	9
48969	Washer - .010	45
50088	Setscrew - Hex sock., cup pt, 1/4-20 x 3/4.	12
53768	Setscrew - Hex sock., cup pt, 8-32 x 1/4	22,24
55776	Lockwasher - Int tooth, No. 6 .	21,51
56786	Washer - 13/32 x 13/16 x .065	2
57155	Nut - Hex, 4-40	43
58694	Plunger - Spindle	8,11
58696	Spring - Spindle	8,11
69682	Lockwasher - Int tooth, No. 6 .	66
70928	Setscrew - Hex. sock. hd, cup pt, 6-32 x 1/4	71
71638	Clamp - Lamp socket	43
74906	Washer - Spacer.	61
75847	Washer - 1/4 x 9/16 x .065. . .	2
76529	Screw - Cap, hex sock. hd, 10-32 x 3/8	30
77219	Washer - Bearing retaining . .	7
78621	Lockwasher - Int tooth, No. 10 (AV-256 Models).	77
78624	Washer - Shutter shaft.	45
79097	Washer - Framing lever	47
80753	Lockwasher - Int tooth, 3/8 . .	72,76
80969	Washer - Spacer.	10
83373	Reflector - Lamp	26
86892	Washer - Retaining.	38
87777	Screw - Lamp socket mounting	43
88937	Plate - Handle reinforcement .	67
89342	Lockwasher - Ext tooth, No. 8 (AV-256 Models).	20
90630	Washer - 3/32 x 1/4 x .020. . .	55
92950	Washer - .005	45
93847	Washer - Spacer.	29
95533	Washer - 5/32 x 3/8 x .049 (TR-R Models)	72,76
97826	Ring - Retaining.	63
107101	Setscrew - Hex sock., cone pt, 5-40 x 3/16	4,53,60,63
107213	Screw - Min. hd, 8-32 x 7/16 .	21
107243	Screw - Flat hd, 4-40 x 3/16. .	24
107606	Ring - Retaining.	29
108546	Nut - Flywheel.	13
109571	Setscrew - Hex sock., cone pt, 4-40 x 1/8	35
110005	Rivet - (TR-R Models).	14
116266	Rivet	4,15,15A
117165	Spring - Condenser lens separator.	27
117543	Plate - Claw pivot.	49
117547	Eccentric - Stroke adjusting. .	49
117548	Pivot - Framing lever.	47
117549	Spacer - Claw pivot plate. . . .	49
117713	Cup - Damping bearing	55
117725	Worm - Shutter shaft.	63
117736	Sound Optics Assembly	40
117762	Spring - Sprocket roller.	52,54
119395	Washer - Spacer.	33
119416	Grommet (TR-R Models)	14
120213	Sleeve - Mechanism support bracket	14,15
120243	Shaft - Rewind shift plate. . . .	61
120335	Washer - Lamp socket mounting	43
120389	Rivet	59
120391	Guide - Aperture plate.	59
120392	Spring - Side guide	59
120393	Rivet	59,62
120422	Washer - Retaining.	14,15,22,44
120438	Link - Pressure roller equalizing	36
120444	Grommet.	5,9,14,15
120445	Sleeve.	5,9,22
120456	Bearing - Ball	35
120466	Spring - Sound optics bracket .	37
120468	Eccentric - Sound optics bracket	38
120471	Post - Sound optics mount adjusting	40
120475	Spring - Sound optics mount . .	40
120476	Nut - Sound optics post	40
120486	Spring - Sprocket guard detent	54
120642	Washer - Retaining.	22,52,54
120672	Clip - Reel spindle	8,11
120674	Bearing - Ball	63
120986	Washer - Flywheel shaft	35
121507	Sprocket Roller Plate Assembly	52,54
121510	Condenser Mount Assembly . .	27
121517	Pressure Arm Assembly	36
122233	Washer - Spacer.	6
122608	Bracket - Speaker cable.	69
122666	Screw - Pan hd, 4-40 x 3/8. . .	38
122686	Screw - Wood, rd hd, No. 8 x 1/2	69
122691	Screw - Pan hd, 6-32 x 1/4 (TR-R Models)	22
122706	Screw - Pan hd, 8-32 x 3/8. . .	9
122713	Screw - Pan hd, 6-32 x 1/2. . .	1,14,16
122714	Screw - Pan hd, 8-32 x 1/2. . .	1
122715	Screw - Pan hd, 6-32 x 3/8. . .	24,53
122717	Screw - Pan hd, 4-40 x 3/16. .	4,24,26,37, 50
122718	Screw - Pan hd, 6-32 x 5/8. . .	51
122720	Screw - Pan hd, 4-40 x 5/16. .	38
122721	Screw - Pan hd, 6-32 x 5/16. .	51,61
122727	Screw - Pan hd, 10-32 x 1/2 (AV-256 Models).	77

PART NO.	DESCRIPTION	FIG.
122730	Screw - Pan hd, 4-40 x 5/8. . .	39,43
122767	Screw - Pan hd, 10-32 x 1 . . .	2
122778	Screw - Pan hd, 6-32 x 1	4
122791	Screw - Tap., Type A, pan hd, No. 10 x 3/4.	2
122808	Screw - Pan hd, 4-40 x 1/8. . .	50
122814	Screw - Pan hd, 2-56 x 3/16. .	40,55
122992	Nut - Hex, 6-32	28,34
123363	Washer - Spacer.	13
123633	Screw - Tap., Type B, pan hd, No. 2 x 1/8.	4,14
123639	Spring - Handle	67
123851	Belt - Rewind.	1
123856	Washer - Spacer.	6
123857	Washer - Spacer.	6
123869	Support - Lower loop.	50
123885	Spring - Rewind shaft lever detent	62
123898	Spacer - Fan housing.	21
123970	Screw - Pan hd, 6-32 x 1-3/4 .	21
124128	Lockwasher - Int tooth, alternate twist, 3/8	6
124214	Washer - Spacer.	13
124338	Screw - Tap., Type F, pan hd, 10-32 x 3/8	76
124404	Sleeve - Mechanism mounting post	2
124606	Damping Arm Assembly.	55
124832	Screw - Min hd, 2-56 x 3/16. .	41,51,53
125104	Spring - Claw.	48
125348	Washer - Retaining (TR-R Models)	14
125349	Washer - Case bracket	4,65
125789	Ball - Nylon, 3/16.	50,52,54
125854	Grommet - Mechanism mounting post.	2
126284	Pawl - Pulley and Ratchet Assembly.	9
126319	Gear - Reverse drive differential.	60
126321	Gear and Sprocket Drive Assembly.	60
126326	Pulley - Rewind drive	61
126332	Chain - Reverse flywheel drive	35
126751	Plate - Sprocket.	51,53
126752	Sprocket - Hub.	51,53
126841	Collar - Upper sprocket hub. .	51
126842	Stud - Rewind plate.	61
127184	Stud - Sprocket drive.	51
127868	Spring - Pulldown in-and-out .	46
128527	Ring - Retaining.	44,47
128713	Washer - Shutter shaft.	45
128967	Rivet - Hinge, latch.	65
129404	Roller - Pressure.	36
129413	Spring - Pressure pad.	58
129414	Post - Pressure pad hinge . . .	57
129415	Spring - Gate mounting	57
129457	Spring - Lens retaining	50
129458	Catch - Film gate.	50
129461	Spring - Loop restorer	37
129464	Pivot - Loop former arm. . . .	37
129465	Handle - Loop restorer	36
129467	Anchor - Loop restorer spring	37
129757	Ring - Retaining.	62
129870	Screw - Pan hd, 2-56 x 5/64. .	58
130179	Loop Former Arm and Shaft Assembly.	37
130340	Pin - Spring, 1/16 x 3/8.	7
130610	Clip - Motor grounding	22
131075	Ring - Retaining.	31
131241	Plate - Elevating mechanism .	68
131263	Washer - Spacer.	68
131268	Washer - Elevating mechanism	68
131283	Screw - Tap., Type F, pan hd, 6-32 x 3/8 (TR-R Models). . .	72,76
131363	Spring - Reverse drive	60
131369	Actuator - Reverse take-up clutch	60
131544	Spring - Damping roller.	55
131545	Setscrew - Hex sock., oval pt, 4-40 x 5/8	40
131546	Spring - Pressure roller	36
131563	Clutch and Bushing Assembly .	44
131564	Bracket and Stud Assembly. . .	44
132036	Sound Optics Bracket Assembly	40
132172	Inner Shutter Blade and Studs Assembly.	45
132173	Outer Shutter Blade and Studs Assembly.	45
134124	Shutter Assembly	45
137362	Ring - Retaining.	52,54
137410	Rivet - (AV-126 Models)	72
137413	Rivet - Connector (AV-256 Models)	76
138142	Baffle - Aperture plate	57
138144	Aperture Plate Assembly. . . .	59
138229	Washer - Mechanism mounting	3
138252	Ring - Retaining.	35
138254	Ring - Retaining.	68
138688	Grommet.	22
139481	Pad - Claw pivot, small.	48
140102	Washer - Spacer.	29
140110	Washer - Spacer.	9
140118	Window - Excitor lamp	4
141285	Pin - Spring, stain. steel, 3/32 x 1/4	8,11
142849	Washer - Lamp socket mounting	43
142850	Screw - Lamp adjusting.	5
143177	Pivot - Supply arm	6
143179	Screw - Cover	1
143206	Fan - Mechanism drive motor.	22
144638	Ring - Retaining.	47
145169	Support and Lamp Chimney Assembly.	26
145264	Claw Assembly.	48
146581	Washer - Retaining.	31
146816	Screw - Pan hd, 8-32 x 3/8 (AV-126 Models).	17
147657	Speaker Cable and Plug Assy .	69
147658	Speaker - (AV-126 Models). . .	69
148960	Roller - Damping	55
149578	Cam - In-and-out	45
149738	Washer - Rewind plate shaft. .	61

PART NO.	DESCRIPTION	FIG.
150124	Fastener - Sems, pan hd, 4-40 x 3/16	36,46,55
150125	Fastener - Sems, pan hd, 4-40 x 5/16	21,47,72,76
151409	Shaft - Shutter	63
151913	Screw - Tap., Type A, pan hd, No. 8 x 5/8	69
151951	Fastener - Sems, pan hd, 6-32 x 3/16	46,48
151952	Fastener - Sems, pan hd, 6-32 x 3/8	17,19
152627	Screw - Tap., Type F, pan hd, 4-40 x 3/16 (AV-256 Models)	78
153360	Roller - Belt shifting lever	31
154621	Washer - Control knob	71
155047	Screw - Oval hd, 6-32 x 5/8	65,68
155055	Bracket - Elevator	68
155056	Plate - Elevator spacer	68
155058	Rack - Elevating mechanism	68
155059	Insert - Elevating knob	68
155065	Bearing - Elevating	68
155270	Flywheel Assembly	13
155274	Hub - Upper sprocket	51
155278	Flywheel Shaft and Sound Drum Assembly	35
155282	Ratchet - Flywheel shaft	35
155285	Spacer	13
155484	Insert - Control knob	71
155590	Braking Spring and Button Assembly	36
155815	Hub - Lower sprocket	53
156258	Bearing - Sound head bracket	42
156850	Nut - Switch bracket	33
157636	Cover - Sound optics adjusting lever	39
157866	Fastener - Sems, pan hd, 2-56 x 3/16	57
158002	Setscrew - Hex sock., cup pt, 4-40 x 3/32	51
158416	Fastener - Sems, pan hd, 6-32 x 1/2	30
158638	Spring - Condenser lens	27
159164	Clamp - Cable (TR-R Models)	72,76
159423	Washer - Spacer	72,76
159431	Washer - Shoulder	72,76
159432	Washer - 1/4 x 1/2 x 1/16	72,76
159433	Washer - Shoulder	72,76
159434	Washer - 3/8 x 5/8 x 1/16	72,76
159436	Amplifier Component Board Assembly (AV-126 Models)	74,75
159441	Screw - Min hd, 6-32 x 1-3/8	73,77
159465	Fastener - Sems, pan hd, 8-32 x 1	37
159512	Grille - Case, front	65
159513	Bracket - Handle	66
159514	Washer	65
159516	Lock - Case cover	65
159521	Post - Cover handle	67
159522	Pin - Case handle	66,67
159523	Plate - Handle post	66,67
159529	Spring - Toggle	34
159530	Bracket - Toggle	34
159531	Arm - Toggle plate	34
159532	Plate - Toggle	34
159536	Link - Toggle	34
159539	Stud	28
159547	Yoke - Switch bracket	33
159548	Screw - Switch bracket	33
159549	Plate - Switch bracket	34
159552	Motor Pulley Assembly (TR Models)	23
159554	Stud - Toggle plate	34
159557	Plate - Fan housing	24
159563	Spring - Belt shifting	31
159571	Idler - Take-up belt	61
159574	Lever - Framing	47
159576	Shaft - Take-up belt idler	61
159577	Ring - Retaining	9,61
159579	Fastener - Sems, pan hd, 6-32 x 1/4	24,34,44,62
159580	Link - Rewind	62
159581	Lever - Rewind	62
159582	Shaft - Rewind lever	62
159583	Spacer - Upper sprocket plate	51
159587	Roller - Film guide	4,56
159588	Shaft - Film guide roller	4
159591	Shutter Drive Pulley Assembly (TR Models)	29
159595	Support - Upper loop	50
159605	Arm - Idler roller bearing	56
159607	Pin - Idler arm pivot	56
159611	Spring - Upper sprocket guard detent	52
159636	Amplifier and Excitor Lamp Power Supply Assembly (AV-126-TR)	17
159657	Belt - Motor drive pulley	21
159667	Plate - Take-up reel arm tension adjusting	10
159670	Spacer	1
159671	Screw - Tap., Type A, pan hd, No. 4 x 1/4	71
159947	Ring - Retaining	9
160027	Washer - Spacer	28
160203	Screw - Pan hd, 2-56 x 7/16	1
160552	Spacer	10
160555	Spring - Take-up arm release lever	9
160674	Connector - Wire	72,76
160716	Take-up Spindle Assembly	11
160724	Switch Bracket Assembly	34
160726	Belt Shifting Lever Assembly	31
160761	Sprocket and Pawl Assembly	35
161589	Grille - Case, side	65
161749	Shaft - Idler roller	56
161752	Washer - Spacer	10,33
161755	Washer - Spacer	29
161756	Washer - Spacer	29
161793	Pivot - Take-up reel arm	10
161810	Rewind Plate and Guide Assy	62
161841	Amplifier Component Board Assembly (AV-256 Models)	78,79

PART NO.	DESCRIPTION	FIG.
161843	Speaker - (AV-256 Models). . .	69
161845	Amplifier and Excitor Lamp Power Supply Assembly (AV-256-TR)	19
161907	Spring - Shifting roller	31
161925	Spring - Framing shaft	47
162260	Bushing - Arm and Shaft Assy.	28
162261	Fastener - Sems, pan hd, 8-32 x 3/8	21,28
162312	Spacer - Excitor lamp cover. .	4
162403	Spring - Claw retaining	48
162456	Board - Switch (TR-R Models)	15A
162750	Bearing - Mechanism Housing Assembly.	64
162751	Bearing - Mechanism Housing Assembly.	64
162754	Upper Sprocket Shaft Assembly	51
162756	Upper Sprocket Drive Shaft and Gear Assembly	61
162764	Pinion - Elevating.	68
162815	Lever - Control switch	33
162894	Standoff - Circuit board.	73,77
162914	Grille - Case, bottom	2
162998	Spring - Idler arm	56
163077	Blower Wheel and Hub Assembly	24
163536	Washer - Elevating mechanism	68
163546	Washer - Spacer.	62
163815	Post - Mechanism mounting . .	12
164125	Bracket - Lower mechanism mounting	65
164127	Screw - Oval hd, 8-32 x 1. . . .	3
164128	Washer - Mechanism mounting	3
164231	Washer - Spacer.	28
164232	Washer - Spacer.	49
164261	Shield - Control switch	5
164262	Shield - Motor fan.	5
164309	Shaft - Pressure roller	36
164310	Cam - Excitor lamp release. .	39
164368	Silicon Solar Cell Mount and Cable Assembly.	41
164369	Plug - Cable Assembly	41
164405	Lower Sprocket Shaft and Gear Assembly.	53
164494	Excitor Lamp Contact Cover Assembly.	39
164762	Screw - Min hd, 6-32 x 1 1/2 (AV-256 Models).	77
164763	Standoff - Amplifier mounting (AV-256 Models).	77
164769	Terminal - (AV-126 Models). .	72,76
164770	Lockwasher - Connector	72,76
164789	Spider - Reverse	60
164790	Gear - Reverse drive	60
164853	Clip - Oil catcher pad (TR Models).	23
165173	Supply Spindle Assembly	8
165193	Pad - Oil catcher (TR Models)	23
165194	Ring - Motor pulley (TR Models).	23
166086	Insulator - (AV-256 Models). .	15
166087	Bracket and Insulator Assembly (AV-256-TR)	15
166131	Fan - Blower motor (TR-R Models)	25
166136	Shutter Drive Pulley Assembly (TR-R Models)	29
166141	Grille - Mechanism drive cover (TR-R Models).	14
166143	Bracket (TR-R Models)	15A
166151	Bracket - Mechanism support.	15
166260	Plate and Pivot Assembly. . . .	9
166264	Upper Sprocket Plate, Bearing, and Pin Assembly	52
166277	Amplifier and Excitor Lamp Power Supply Assembly (AV-126-TR-R).	17
166443	Amplifier and Exciter Lamp Power Supply Assembly (AV-256-TR-R).	19
166488	Pressure Pad Assembly.	58
166489	Aperture Plate and Pad Assy .	57
166899	Pivot - Belt shifting lever . . .	31
167229	Spring - Coupling (TR-R Models)	22
167290	Pulley - Supply arm	7
168729	Washer - Spacer.	37
169626	Pulley and Ratchet Assembly .	9
170458	Shutter Drive Arm and Pulley Assembly (TR Models).	29
170488	Pivot - Arm and Shaft Assembly	28
170807	Post - Case handle	66
171026	Nut - Lock, 1/4-28 LH.	45
171493	Eccentric - Motor mounting . .	22
171759	Shutter Weight Assembly	45
171760	Shutter Drive Arm and Shaft Assembly.	29
172250	Lever - Take-up arm release.	9
172252	Pin - Take-up arm	10
172254	Spring - Take-up arm	10
172287	Spacer	30
172561	Control Switch Cam and Pinion Assembly.	32
172991	Support - Flywheel	21
173475	Washer - Spacer.	2
173555	Fastener - Sems, pan hd, 4-40 x 3/8	49
174929	Knob Assembly.	71
174930	Elevating Knob Assembly. . . .	68
175269	Pad - Claw pivot, large	48
177215	Hinge Assembly	65
177274	Washer - Spacer.	9
177739	Clamp - Capacitor C-15 (AV-256 Models).	77
177992	Washer - Spacer.	22
178762	Clamp - Capacitor C-13 (AV-256 Models).	77
178763	Screw - Pan hd, 8-32 x 3/4. . .	22
178977	Belt - Shifting	21
179131	Spring - Sprocket drive	51
179307	Motor Pulley Assembly (TR-R Models)	22
180981	Handle - Case	66,67
180983	Medallion - KODAK PAGEANT	65
180984	Plate - 25 Watt (AV-256 Models)	65
181004	Mechanism Housing Assembly	64

PART NO.	DESCRIPTION	FIG.
181006	Sound Head Bracket Assembly	42
181009	Bracket and Pivot Assembly. .	10
181010	Take-Up Arm, Pin and Bearing Assembly.	10
181011	Plate - Take-up arm.	10
181013	Supply Arm Assembly	7
181014	Arm and Bushing Assembly . .	7
181050	Cover - Lamphouse.	1
181051	Plate - Lamphouse cover (AV-126-TR)	1
181052	Plate - Lamphouse cover (AV-126-TR-R).	1
181054	Knob - Threading	63
181055	Lower Sprocket Plate Assembly	54,56
181056	Upper Sprocket Plate Assembly	51
181057	Roller - Sprocket	52,54
181058	Knob - Control lever.	4
181059	Amplifier Assembly (AV-126-TR)	72
181098	Foot - Case bottom.	2
181147	Amplifier Assembly (AV-256-TR-R).	76
181148	Amplifier Assembly (AV-126-TR-R).	72
181149	Guide - Film	72,76
181152	Exciter Lamp Cover Assembly (TR Models).	4
181153	Exciter Lamp Cover Assembly (TR-R Models) . . .	4
181155	Plate - Control switch (TR Models).	4
181156	Plate - Control switch (TR-R Models)	4
181157	Mechanism Drive Cover Assembly (TR-R Models) . . .	14
181158	Cover - Mechanism drive (TR-R Models)	14
181159	Plate - Mechanism drive cover (TR-R Models).	14

PART NO.	DESCRIPTION	FIG.
181160	Lamphouse Baffle and Light Strip Assembly (TR Models) .	16
181162	Plate - Supply arm	6
181163	Housing - Fan	24
181164	Roller - Loop restorer	36
181165	Belt - Take-up.	1
181367	Plate - Lamphouse cover (AV-256-TR)	1
181368	Plate - Lamphouse cover (AV-256-TR-R).	1
181369	Plate - Control panel (AV-126-TR)	71
181370	Plate - Control panel (AV-126-TR-R).	71
181371	Plate - Control panel (AV-256-TR)	71
181372	Plate - Control panel (AV-256-TR-R).	71
181552	Framing Knob and Shaft Assy .	47
181553	Case Assembly (AV-126-TR) .	65
181554	Case Assembly (AV-256-TR) .	65
181895	Amplifier Assembly (AV-256-TR)	76
182043	Cam - Pulldown	45
182489	Case Assembly (AV-126-TR-R)	65
182490	Case Assembly (AV-256-TR-R)	65
182810	Strip - Felt	4
183615	Snubber - Felt	4
184118	Spring - Shutter weight return.	45
185605	Cover - Elevation foot	68
761517	Plug - Speaker.	69
828667	Lens - Condenser, front.	27
851299	Screw - Pan hd, 6-32 x 3/16. .	6
851488	Screw - Pan hd, 6-32 x 1 3/4 .	77
851597	Screw - Tap., Type A, pan hd, No. 6 x 1/2.	71,72,76,78
851816	Washer - Spacer.	9
851927	Setscrew - Hex sock., cup pt, 8-32 x 1/8	22,25
852562	Setscrew - Hex sock., cup pt, 8-32 x 3/16	32
861447	Washer - Elevating mechanism.	68

Always give PART NUMBER and NAME when ordering parts

AV-126-TR MODELS

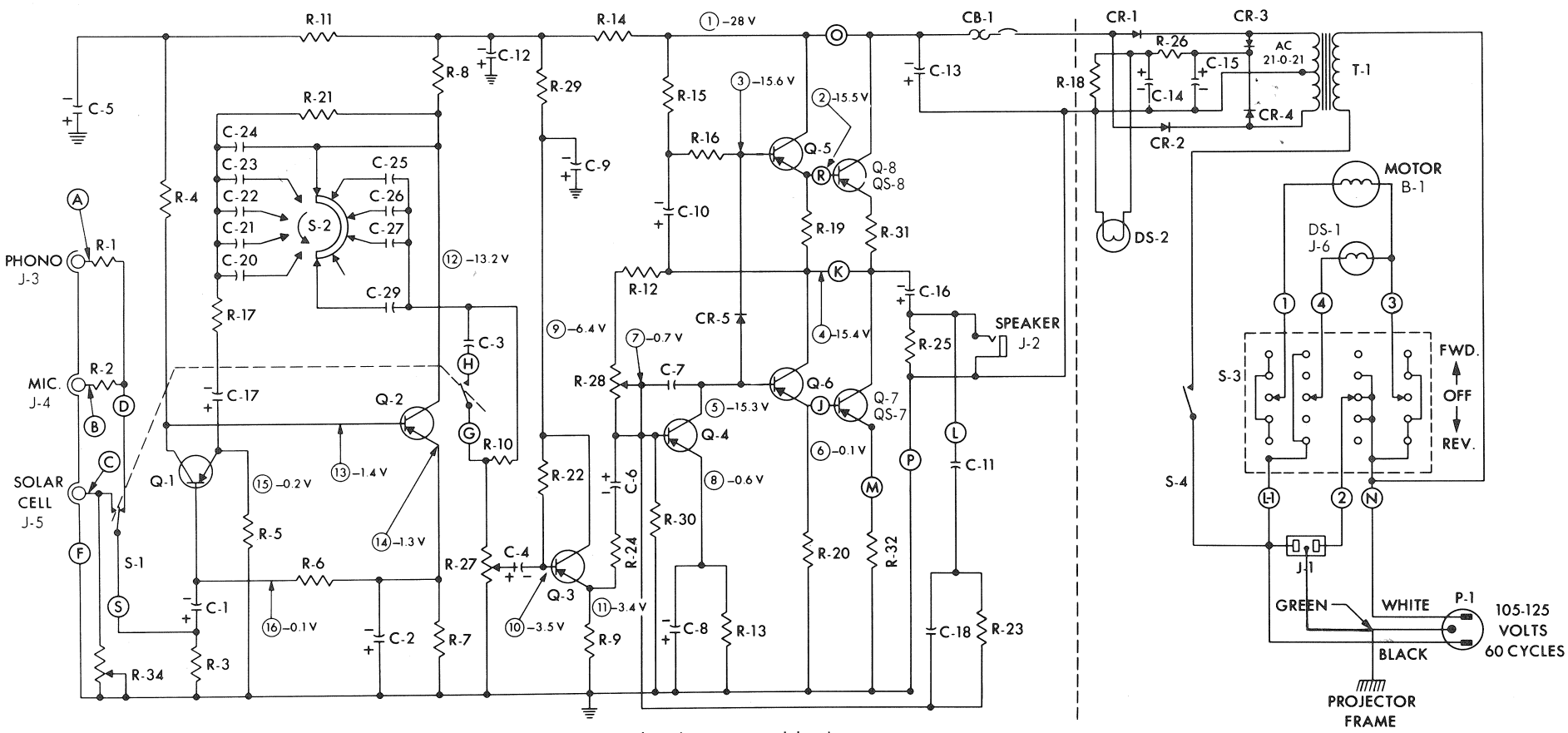

Measure dc voltages with high impedance voltmeter with no input signal and no external load.

Numbers in circles refer to voltage check points.

SCHEMATIC CIRCUIT (FEBRUARY 1968)

CODE	PART NO.	DESCRIPTION	FIG.
B-1	159442	Mechanism Drive Motor and Bracket Assembly	23
C-1	161022	25 µF, 10Vdc, Electrolytic	74
C-2	161022	25 µF, 10Vdc, Electrolytic	74
C-3	152129	.01 µF ±10%, 50Vdc	74
C-4	161022	25 µF, 10Vdc, Electrolytic	74
C-5	159408	75 µF, 25Vdc, Electrolytic	74
C-6	159408	75 µF, 25Vdc, Electrolytic	74
C-7	159411	50pF ±10%, 50Vdc min	74
C-8	159412	60 µF, 6Vdc, Electrolytic	74
C-9	159410	125 µF, 50Vdc, Electrolytic	74
C-10	159413	10 µF, 50Vdc, Electrolytic	74
C-11	160673	.68 µF ±10%, 100Vdc	74
C-12	162883	60 µF, 50Vdc, Electrolytic	74
C-13	159416	Capacitor	73
C-14	159634	1300 µF, 35Vdc, Electrolytic	17
C-15	159634	1300 µF, 35Vdc, Electrolytic	17
C-16	159416	Capacitor	73
C-17	161022	25 µF, 10Vdc, Electrolytic	74
C-18	159418	100pF ±10%, 50Vdc	74
C-20	161020	.005 µF ±10%, 50Vdc	74
C-21	159420	.004 µF ±10%, 50Vdc	74
C-22	161021	.0018 µF ±10%, 50Vdc	74
C-23	161021	.0018 µF ±10%, 50Vdc	74
C-24	159418	100pF ±10%, 50Vdc	74
C-25	159409	.027 µF, 100Vdc	74
C-26	159414	.033 µF, 100Vdc	74
C-27	159419	.047 µF, 100Vdc	74
C-29	159413	10 µF, 50Vdc, Electrolytic	74
CB-1	151383	Circuit Breaker	72
CR-1	164193	750mA, 200PIV Diode	18
CR-2	164193	750mA, 200PIV Diode	18

CODE	PART NO.	DESCRIPTION	FIG.
CR-3	164193	750mA, 200PIV Diode	18
CR-4	164193	750mA, 200PIV Diode	18
CR-5	159444	Diode Stabistor S320G	75
DS-1		Projection Lamp	26
DS-2		Photocell Excitor Lamp	5
J-2	147832	Speaker Jack	72
J-3	159429	Phono Jack	72
J-4	159430	Microphone Connector	72
J-5	159429	Solar Cell Jack	72
J-6	145170	Projection Lamp Socket	43
P-1	159551	Power Cord	1
Q-1	184574	Transistor 2N5366	74
Q-2	184574	Transistor 2N5366	74
Q-3	166893	Transistor 2N217, 2N408, or 2N1370	74
Q-4	184574	Transistor 2N5366	74
Q-5	166893	Transistor 2N217, 2N408, or 2N1370	74
Q-6	170542	Transistor 2N1102	74
Q-7	159426	Transistor 2N307 or B10394	72
Q-8	159426	Transistor 2N307 or B10394	72
QS-7	159422	Transistor Socket	72
QS-8	159422	Transistor Socket	72
R-1	126101	470k Ω ±10%, 1/2W	75
R-2	78671	47k Ω ±10%, 1/2W	75
R-3	160558	3.6k Ω ±5%, 1/2W	75
R-4	126900	10k Ω ±10%, 1/2W	75
R-5	136709	47 Ω ±10%, 1/2W	75
R-6	78671	47k Ω ±10%, 1/2W	75

CODE	PART NO.	DESCRIPTION	FIG.
R-7	119816	1k Ω ±10%, 1/2W	75
R-8	126900	10k Ω ±10%, 1/2W	75
R-9	119816	1k Ω ±10%, 1/2W	75
R-10	152753	7.5k Ω ±5%, 1/2W	75
R-11	126394	4.7k Ω ±10%, 1/2W	75
R-12	168043	62k Ω ±5%, 1/2W	75
R-13	126401	150 Ω ±10%, 1/2W	75
R-14	159406	220 Ω ±10%, 1/2W	75
R-15	119816	1k Ω ±10%, 1/2W	75
R-16	870569	2.7k Ω ±10%, 1/2W	75
R-17	872379	1.2k Ω ±10%, 1/2W	75
R-18	154868	500 Ω ±10%, 2W, Wirewound	18
R-19	153447	200 Ω ±5%, 1/2W	75
R-20	153447	200 Ω ±5%, 1/2W	75
R-21	120506	15k Ω ±10%, 1/2W	75
R-22	120508	68k Ω ±10%, 1/2W	75
R-23	126903	22k Ω ±10%, 1/2W	75
R-24	159406	220 Ω ±10%, 1/2W	75
R-25	159407	47 Ω ±10%, 2W	73
R-26	159633	25 Ω ±10%, 25W	18
R-27	159427	5k Ω Volume Control	75
R-28	159428	Bias Control, 500k Ω	75
R-29	154866	5.6k Ω ±10%, 1/2W	75
R-30	120504	33k Ω ±10%, 1/2W	75
R-31	160672	.25 Ω ±10%, 1W, Wirewound	73
R-32	160672	.25 Ω ±10%, 1W, Wirewound	75
R-34	164603	Potentiometer, 25k Ω	72
S-1	186949	Input Selector Switch	72
S-2	159435	Tone Control Switch	74
S-3	159533	Projector Control Switch	32
S-4 / J-1	159445	Amplifier Control Switch / Threadlamp Socket	72
T-1	159637	Power Transformer	17

PART NUMBERS IN NUMERICAL ORDER

NUMBER	CODE
78671	R-2
78671	R-6
119816	R-7
119816	R-9
119816	R-15
120504	R-30
120506	R-21
120508	R-22
126101	R-1
126394	R-11
126401	R-13

NUMBER	CODE
126900	R-4
126900	R-8
126903	R-23
136709	R-5
145170	J-6
147832	J-2
151383	CB-1
152129	C-3
152753	R-10
153447	R-19
153447	R-20

NUMBER	CODE
154866	R-29
154868	R-18
159406	R-14
159406	R-24
159407	R-25
159408	C-5
159408	C-6
159409	C-25
159410	C-9
159411	C-7
159412	C-8

NUMBER	CODE
159413	C-10
159413	C-29
159414	C-26
159416	C-13
159416	C-16
159418	C-18
159418	C-24
159419	C-27
159420	C-21
159422	QS-7
159422	QS-8

NUMBER	CODE
159426	Q-7
159426	Q-8
159427	R-27
159428	R-28
159429	J-3
159429	J-5
159430	J-4
159435	S-2
159442	B-1
159444	CR-5
159445	S4, J-1

NUMBER	CODE
159533	S-3
159551	P-1
159633	R-26
159634	C-14
159634	C-15
159637	T-1
160558	R-3
160672	R-31
160672	R-32
160673	C-11
161020	C-20

NUMBER	CODE
161021	C-22
161021	C-23
161022	C-1
161022	C-2
161022	C-4
161022	C-17
162883	C-12
164193	CR-1
164193	CR-2
164193	CR-3
164193	CR-4

NUMBER	CODE
164603	R-34
166893	Q-3
166893	Q-5
168043	R-12
170542	Q-6
184574	Q-1
184574	Q-2
184574	Q-4
186949	S-1
870569	R-16
872379	R-17

AV-126-TR-R MODELS

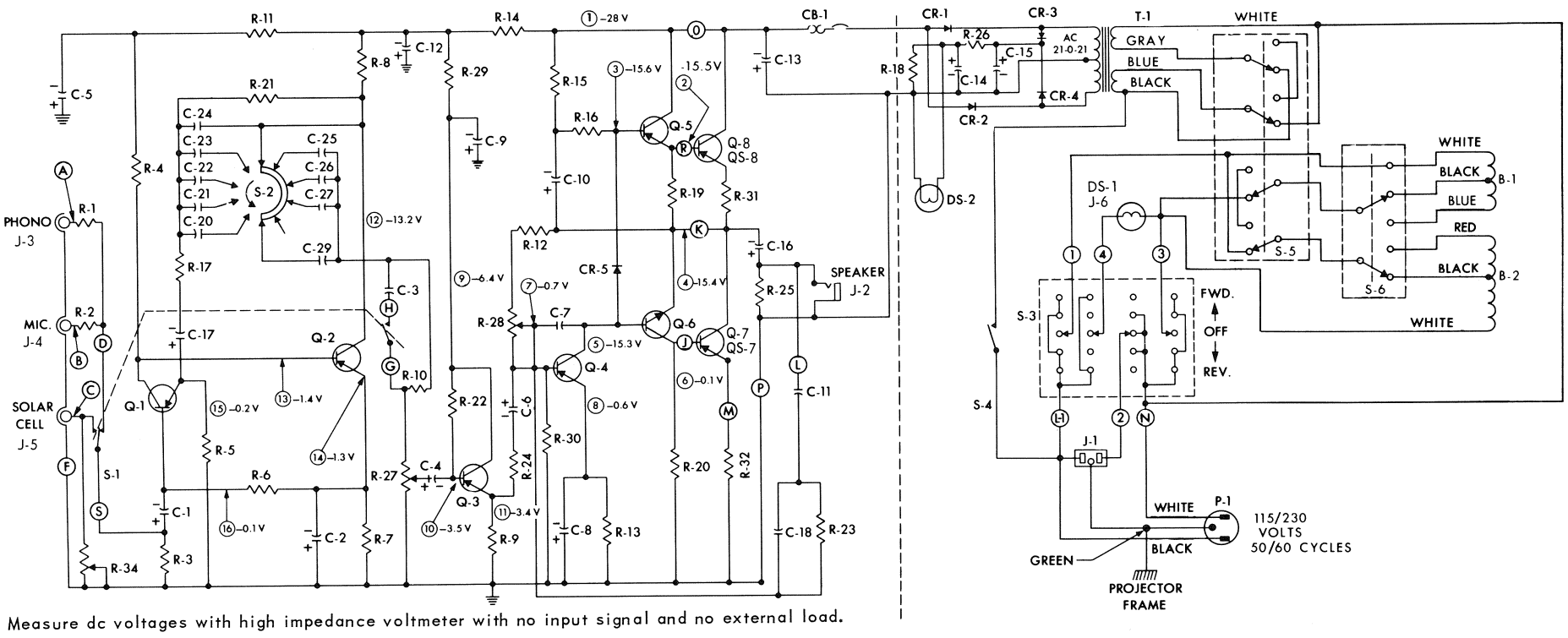

Measure dc voltages with high impedance voltmeter with no input signal and no external load.

Numbers in circles refer to voltage check points.

SCHEMATIC CIRCUIT (FEBRUARY 1968)

CODE	PART NO.	DESCRIPTION	FIG.
B-1	166147	Motor and Bracket Assembly...	22
B-2	166128	Blower Motor and Bracket Assembly.....	25
C-1	161022	25µF, 10Vdc, Electrolytic.....	74
C-2	161022	25µF, 10Vdc, Electrolytic.....	74
C-3	152129	.01µF ±10%, 50Vdc	74
C-4	161022	25µF, 10Vdc, Electrolytic.....	74
C-5	159408	75µF, 25Vdc, Electrolytic.....	74
C-6	159408	75µF, 25Vdc, Electrolytic.....	74
C-7	159411	50pF ±10%, 50Vdc min.....	74
C-8	159412	60µF, 6Vdc, Electrolytic.....	74
C-9	159410	125µF, 50Vdc, Electrolytic....	74
C-10	159413	10µF, 50Vdc, Electrolytic.....	74
C-11	160673	.68µF ±10%, 100Vdc	74
C-12	162883	60µF, 50Vdc, Electrolytic.....	74
C-13	159416	Capacitor.....	73
C-14	159634	1300µF, 35Vdc, Electrolytic...	17
C-15	159634	1300µF, 35Vdc, Electrolytic...	17
C-16	159416	Capacitor.....	73
C-17	161022	25µF, 10Vdc, Electrolytic.....	74
C-18	159418	100pF ±10%, 50Vdc.....	74
C-20	161020	.005µF ±10%, 50Vdc	74
C-21	159420	.004µF ±10%, 50Vdc	74
C-22	161021	.0018µF ±10%, 50Vdc	74
C-23	161021	.0018µF ±10%, 50Vdc	74
C-24	159418	100pF ±10%, 50Vdc.....	74
C-25	159409	.027µF, 100Vdc	74
C-26	159414	.033µF, 100Vdc	74
C-27	159419	.047µF, 100Vdc	74
C-29	159413	10µF, 50Vdc, Electrolytic.....	74
CB-1	151383	Circuit Breaker.....	72
CR-1	164193	750mA, 200PIV Diode.....	18
CR-2	164193	750mA, 200PIV Diode.....	18

CODE	PART NO.	DESCRIPTION	FIG.
CR-3	164193	750mA, 200PIV Diode.....	18
CR-4	164193	750mA, 200PIV Diode.....	18
CR-5	159444	Diode Stabistor S320G	75
DS-1		Projection Lamp	26
DS-2		Photocell Excitor Lamp.....	5
J-2	147832	Speaker Jack	72
J-3	159429	Phono Jack	72
J-4	159430	Microphone Connector	72
J-5	159429	Solar Cell Jack.....	72
J-6	145170	Projection Lamp Socket	43
P-1	159551	Power Cord	1
Q-1	184574	Transistor 2N5366	74
Q-2	184574	Transistor 2N5366	74
Q-3	166893	Transistor 2N217, 2N408, or 2N1370.....	74
Q-4	184574	Transistor 2N5366	74
Q-5	166893	Transistor 2N217, 2N408, or 2N1370.....	74
Q-6	170542	Transistor 2N1102.....	74
Q-7	159426	Transistor 2N307 or B10394...	72
Q-8	159426	Transistor 2N307 or B10394...	72
QS-7	159422	Transistor Socket	72
QS-8	159422	Transistor Socket	72
R-1	126101	470kΩ ±10%, 1/2W	75
R-2	78671	47kΩ ±10%, 1/2W	75
R-3	160558	3.6kΩ ±5%, 1/2W.....	75
R-4	126900	10kΩ ±10%, 1/2W	75
R-5	136709	47Ω ±10%, 1/2W	75
R-6	78671	47kΩ ±10%, 1/2W	75
R-7	119816	1kΩ ±10%, 1/2W	75

CODE	PART NO.	DESCRIPTION	FIG.
R-8	126900	10kΩ ±10%, 1/2W	75
R-9	119816	1kΩ ±10%, 1/2W	75
R-10	152753	7.5kΩ ±5%, 1/2W.....	75
R-11	126394	4.7kΩ ±10%, 1/2W.....	75
R-12	168043	62kΩ ±5%, 1/2W	75
R-13	126401	150Ω ±10%, 1/2W	75
R-14	159406	220Ω ±10%, 1/2W	75
R-15	119816	1kΩ ±10%, 1/2W	75
R-16	870569	2.7kΩ ±10%, 1/2W.....	75
R-17	872379	1.2kΩ ±10%, 1/2W.....	75
R-18	154868	500Ω ±10%, 2W, Wirewound .	18
R-19	153447	200Ω ±5%, 1/2W	75
R-20	153447	200Ω ±5%, 1/2W	75
R-21	120506	15kΩ ±10%, 1/2W	75
R-22	120508	68kΩ ±10%, 1/2W	75
R-23	126903	22kΩ ±10%, 1/2W	75
R-24	159406	220Ω ±10%, 1/2W	75
R-25	159407	47Ω ±10%, 2W	73
R-26	159633	25Ω ±10%, 25W	18
R-27	159427	5kΩ Volume Control.....	75
R-28	159428	Bias Control, 500kΩ	75
R-29	154866	5.6kΩ ±10%, 1/2W.....	75
R-30	120504	33kΩ ±10%, 1/2W	75
R-31	160672	.25Ω ±10%, 1W, Wirewound..	73
R-32	160672	.25Ω ±10%, 1W, Wirewound..	75
R-34	164603	Potentiometer, 25kΩ	72
S-1	186949	Input Selector Switch	72
S-2	159435	Tone Control Switch	74
S-3	159533	Projector Control Switch.....	32
S-4, J-1	159445	Amplifier Control Switch..... Threadlamp Socket	72
S-5	166142	Line Voltage Switch	15A
S-6	162455	Line Frequency Switch	15A
T-1	166139	Power Transformer	17

PART NUMBERS IN NUMERICAL ORDER

NUMBER	CODE
78671	R-2
78671	R-6
119816	R-7
119816	R-9
119816	R-15
120504	R-30
120506	R-21
120508	R-22
126101	R-1
126394	R-11
126401	R-13

NUMBER	CODE
126900	R-4
126900	R-8
126903	R-23
136709	R-5
145170	J-6
147832	J-2
151383	CB-1
152129	C-3
152753	R-10
153447	R-19
153447	R-20

NUMBER	CODE
154866	R-29
154868	R-18
159406	R-14
159406	R-24
159407	R-25
159408	C-5
159408	C-6
159409	C-25
159410	C-9
159411	C-7
159412	C-8

NUMBER	CODE
159413	C-10
159413	C-29
159414	C-26
159416	C-13
159416	C-16
159418	C-18
159418	C-24
159419	C-27
159420	C-21
159422	QS-7
159422	QS-8

NUMBER	CODE
159426	Q-7
159426	Q-8
159427	R-27
159428	R-28
159429	J-3
159429	J-5
159430	J-4
159435	S-2
159444	CR-5
159445	S-4, J-1
159533	S-3

NUMBER	CODE
159551	P-1
159633	R-26
159634	C-14
159634	C-15
160558	R-3
160672	R-31
160672	R-32
160673	C-11
161020	C-20
161021	C-22
161021	C-23
161022	C-1

NUMBER	CODE
161022	C-2
161022	C-4
161022	C-17
162455	S-6
162883	C-12
164193	CR-1
164193	CR-2
164193	CR-3
164193	CR-4
164603	R-34
166128	B-2
166139	T-1

NUMBER	CODE
166142	S-5
166147	B-1
166893	Q-3
166893	Q-5
168043	R-12
170542	Q-6
184574	Q-1
184574	Q-2
184574	Q-4
186949	S-1
870569	R-16
872379	R-17

AV-256-TR MODELS

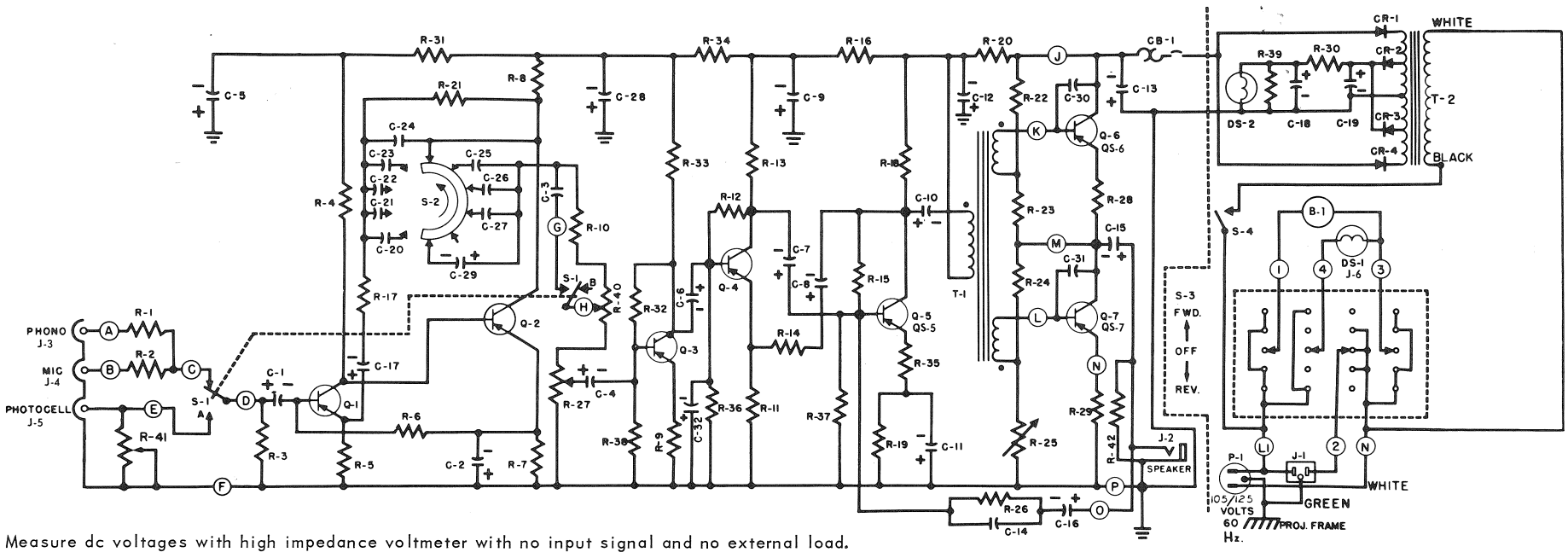

Measure dc voltages with high impedance voltmeter with no input signal and no external load.
Numbers in circles refer to voltage check points.

SCHEMATIC CIRCUIT (FEBRUARY 1968)

CODE	PART NO.	DESCRIPTION	FIG.
B-1	159442	Motor and Bracket Assembly	23
C-1	161022	25µF, 10Vdc, Electrolytic	78
C-2	161022	25µF, 10Vdc, Electrolytic	78
C-3	161858	.015µF, 50Vdc, Electrolytic	78
C-4	161022	25µF, 10Vdc, Electrolytic	78
C-5	164758	40µF, 25Vdc, Electrolytic	78
C-6	161022	25µF, 10Vdc, Electrolytic	78
C-7	159413	10µF, 50Vdc, Electrolytic	78
C-8	159413	10µF, 50Vdc, Electrolytic	78
C-9	159410	125µF, 50Vdc, Electrolytic	78
C-10	165556	25µF, 50Vdc, Electrolytic	78
C-11	161831	75µF, 6Vdc, Electrolytic	78
C-12	159410	125µF, 50Vdc, Electrolytic	78
C-13	161832	Capacitor	77
C-14	143229	.0015pF ±10%, 450Vdc	78
C-15	159416	Capacitor	77
C-16	161022	25µF, 10Vdc, Electrolytic	78
C-17	161022	25µF, 10Vdc, Electrolytic	78
C-18	159634	1300µF, 35Vdc, Electrolytic	19
C-19	159634	1300µF, 35Vdc, Electrolytic	19
C-20	161020	.005µF ±10%, 50Vdc	78
C-21	159420	.004µF ±10%, 50Vdc	78
C-22	161021	.0018µF, 50Vdc	78
C-23	161021	.0018µF, 50Vdc	78
C-24	159418	100pF ±10%, 50Vdc	78
C-25	159409	.027µF, 100Vdc	78
C-26	159414	.033µF, 100Vdc	78
C-27	159419	.047µF, 100Vdc	78
C-28	164758	40µF, 25Vdc, Electrolytic	78
C-29	159413	10µF, 50Vdc, Electrolytic	78
C-30	164757	.001µF ±10%, 50Vdc	77
C-31	164757	.001µF ±10%, 50Vdc	77
C-32	152129	.01µF ±10%, 50Vdc	77
CB-1	151383	Circuit Breaker	76
CR-1	164193	750mA, 200PIV Diode	20
CR-2	164193	750mA, 200PIV Diode	20

CODE	PART NO.	DESCRIPTION	FIG.
CR-3	164193	750mA, 200PIV Diode	20
CR-4	164193	750mA, 200PIV Diode	20
DS-1		Projection Lamp	26
DS-2		Photocell Exciter Lamp	5
J-2	147832	Speaker Jack	76
J-3	159429	Phono Jack	76
J-4	159430	Microphone Connector	76
J-5	159429	Solar Cell Jack	76
J-6	145170	Projection Lamp Socket	43
P-1	159551	Power Cord	1
Q-1	184574	Transistor 2N5366	78
Q-2	184574	Transistor 2N5366	78
Q-3	184574	Transistor 2N5366	78
Q-4	162893	Transistor 2N1038	78
Q-5	161849	Transistor 2N1136	78
Q-6	161835	Transistor 2N1136A	76
Q-7	161835	Transistor 2N1136A	76
QS-5	159422	Transistor Socket	78
QS-6	159422	Transistor Socket	76
QS-7	159422	Transistor Socket	76
R-1	126101	470kΩ ±10%, 1/2W	79
R-2	78671	47kΩ ±10%, 1/2W	79
R-3	147756	1.8kΩ ±10%, 1/2W	79
R-4	126900	10kΩ ±10%, 1/2W	79
R-5	136709	47Ω ±10%, 1/2W	79
R-6	78671	47kΩ ±10%, 1/2W	79
R-7	119816	1kΩ ±10%, 1/2W	79
R-8	126900	10kΩ ±10%, 1/2W	79
R-9	162891	27Ω ±5%, 1/2W	79
R-10	112546	2.7kΩ ±10%, 1/2W	79
R-11	162892	33Ω ±5%, 1/2W	79
R-12	168066	39kΩ ±5%, 1/2W	79
R-13	160123	680Ω ±5%, 1/2W	79

CODE	PART NO.	DESCRIPTION	FIG.
R-14	123301	1.1kΩ ±5%, 1/2W	79
R-15	126905	27kΩ ±10%, 1/2W	79
R-16	866521	390Ω ±10%, 1/2W	79
R-17	872379	1.2kΩ ±10%, 1/2W	79
R-18	165557	600Ω ±5%, 5W, Wirewound	79
R-19	161827	91Ω ±5%, 1W	79
R-20	127852	300Ω ±10%, 5W, Wirewound	79
R-21	872443	12kΩ ±10%, 1/2W	79
R-22	126900	10kΩ ±10%, 1/2W	79
R-23	161828	18Ω ±10%, 1/2W	79
R-24	126900	10kΩ ±10%, 1/2W	79
R-25	161829	Bias Control	79
R-26	147756	1.8kΩ ±10%, 1/2W	79
R-27	178372	Volume Control	79
R-28	161830	1Ω ±5%, 2W, Wirewound	77
R-29	161830	1Ω ±5%, 2W, Wirewound	79
R-30	159633	25Ω ±10%, 25W	20
R-31	126394	4.7kΩ ±10%, 1/2W	79
R-32	78671	47kΩ ±10%, 1/2W	79
R-33	147756	1.8kΩ ±10%, 1/2W	79
R-34	872378	100Ω ±10%, 1/2W	79
R-35	161828	18Ω ±10%, 1/2W	79
R-36	126901	6.8kΩ ±10%, 1/2W	79
R-37	872443	12kΩ ±10%, 1/2W	79
R-38	112546	2.7kΩ ±10%, 1/2W	79
R-39	154868	500Ω ±10%, 2W	20
R-40	161857	Control—Frequency Response	79
R-41	164603	Potentiometer, 25kΩ	76
R-42	154868	500Ω ±10%, 2W, Wirewound	77
S-1	186949	Input Selector Switch	76
S-2	159435	Tone Control Switch	79
S-3	159533	Projector Control Switch	32
S-4	159445	Amplifier Control Switch	76
J-1		Threadlamp Socket	
T-1	161836	Driver Transformer	78
T-2	161837	Power Transformer	19

PART NUMBERS IN NUMERICAL ORDER

NUMBER	CODE
78671	R-2
78671	R-6
78671	R-32
112546	R-10
112546	R-38
119816	R-7
123301	R-14
126101	R-1
126394	R-31
126900	R-4
126900	R-8
126900	R-22
126900	R-24

NUMBER	CODE
126901	R-36
126905	R-15
127852	R-20
136709	R-5
143229	C-14
145170	J-6
147756	R-3
147756	R-26
147756	R-33
147832	J-2
151383	CB-1
152129	C-32
154868	R-39

NUMBER	CODE
154868	R-42
159409	C-25
159410	C-9
159410	C-12
159413	C-7
159413	C-8
159413	C-29
159414	C-26
159416	C-15
159418	C-24
159419	C-27
159420	C-21
159422	QS-5

NUMBER	CODE
159422	QS-6
159422	QS-7
159429	J-3
159429	J-5
159430	J-4
159435	S-2
159442	B-1
159445	S-4, J-1
159533	S-3
159551	P-1
159633	R-30
159634	C-18
159634	C-19

NUMBER	CODE
160123	R-13
161020	C-20
161021	C-22
161021	C-23
161022	C-1
161022	C-2
161022	C-4
161022	C-6
161022	C-16
161022	C-17
161827	R-19
161828	R-23
161828	R-35

NUMBER	CODE
161829	R-25
161830	R-28
161830	R-29
161831	C-11
161832	C-13
161835	Q-6
161835	Q-7
161836	T-1
161837	T-2
161849	Q-5
161857	R-40
161858	C-3
162891	R-9

NUMBER	CODE
162892	R-11
162893	Q-4
164193	CR-1
164193	CR-2
164193	CR-3
164193	CR-4
164603	R-41
164757	C-30
164757	C-31
164758	C-5
164758	C-28
165556	C-10

NUMBER	CODE
165557	R-18
168066	R-12
178372	R-27
184574	Q-1
184574	Q-2
184574	Q-3
186949	S-1
866521	R-16
872378	R-34
872379	R-17
872443	R-21
872443	R-37

AV-256-TR-R MODELS

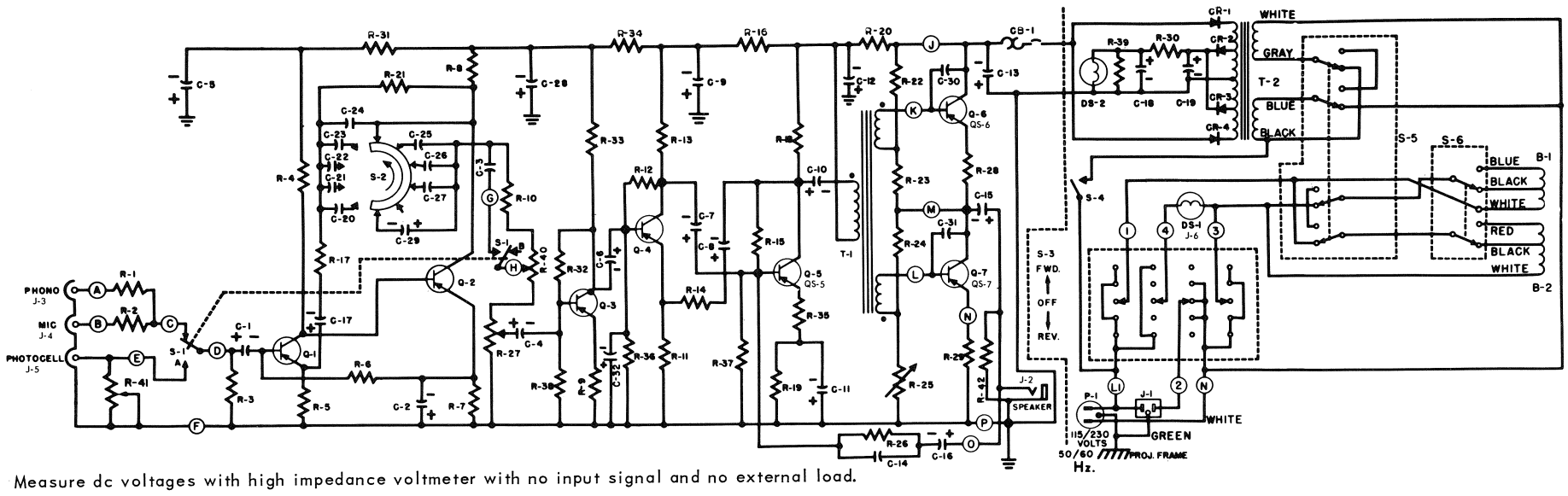

Measure dc voltages with high impedance voltmeter with no input signal and no external load.

Numbers in circles refer to voltage check points.

SCHEMATIC CIRCUIT (FEBRUARY 1968)

CODE	PART NO.	DESCRIPTION	FIG.
B-1	166147	Motor and Bracket Assembly	22
B-2	166128	Blower Motor and Bracket Assembly	25
C-1	161022	25µF, 10Vdc, Electrolytic	78
C-2	161022	25µF, 10Vdc, Electrolytic	78
C-3	161858	.015µF, 50Vdc, Electrolytic	78
C-4	161022	25µF, 10Vdc, Electrolytic	78
C-5	164758	40µF, 25Vdc, Electrolytic	78
C-6	161022	25µF, 10Vdc, Electrolytic	78
C-7	159413	10µF, 50Vdc, Electrolytic	78
C-8	159413	10µF, 50Vdc, Electrolytic	78
C-9	159410	125µF, 50Vdc, Electrolytic	78
C-10	165556	25µF, 50Vdc, Electrolytic	78
C-11	161831	75µF, 6Vdc, Electrolytic	78
C-12	159410	125µF, 50Vdc, Electrolytic	78
C-13	161832	Capacitor	77
C-14	143229	.0015pF ±10%, 450Vdc	78
C-15	159416	Capacitor	77
C-16	161022	25µF, 10Vdc, Electrolytic	78
C-17	161022	25µF, 10Vdc, Electrolytic	78
C-18	159634	1300µF, 35Vdc, Electrolytic	19
C-19	159634	1300µF, 35Vdc, Electrolytic	19
C-20	161020	.005µF ±10%, 50Vdc	78
C-21	159420	.004µF ±10%, 50Vdc	78
C-22	161021	.0018µF, 50Vdc	78
C-23	161021	.0018µF, 50Vdc	78
C-24	159418	100pF ±10%, 50Vdc	78
C-25	159409	.027µF, 100Vdc	78
C-26	159414	.033µF, 100Vdc	78
C-27	159419	.047µF, 100Vdc	78
C-28	164758	40µF, 25Vdc, Electrolytic	78
C-29	159413	10µF, 50Vdc, Electrolytic	78
C-30	164757	.001µF ±10%, 50Vdc	77
C-31	164757	.001µF ±10%, 50Vdc	77
C-32	152129	.01µF ±10%, 50Vdc	77
CB-1	151383	Circuit Breaker	76
CR-1	164193	750mA, 200PIV Diode	20

CODE	PART NO.	DESCRIPTION	FIG.
CR-2	164193	750mA, 200PIV Diode	20
CR-3	164193	750mA, 200PIV Diode	20
CR-4	164193	750mA, 200PIV Diode	20
DS-1		Projection Lamp	26
DS-2		Photocell Exciter Lamp	5
J-2	147832	Speaker Jack	76
J-3	159429	Phono Jack	76
J-4	159430	Microphone Connector	76
J-5	159429	Solar Cell Jack	76
J-6	145170	Projection Lamp Socket	43
P-1	159551	Power Cord	1
Q-1	184574	Transistor 2N5366	78
Q-2	184574	Transistor 2N5366	78
Q-3	184574	Transistor 2N5366	78
Q-4	162893	Transistor 2N1038	78
Q-5	161849	Transistor 2N1136	78
Q-6	161835	Transistor 2N1136A	76
Q-7	161835	Transistor 2N1136A	76
QS-5	159422	Transistor Socket	78
QS-6	159422	Transistor Socket	76
QS-7	159422	Transistor Socket	76
R-1	126101	470kΩ ±10%, 1/2W	79
R-2	78671	47kΩ ±10%, 1/2W	79
R-3	147756	1.8kΩ ±10%, 1/2W	79
R-4	126900	10kΩ ±10%, 1/2W	79
R-5	136709	47Ω ±10%, 1/2W	79
R-6	78671	47kΩ ±10%, 1/2W	79
R-7	119816	1kΩ ±10%, 1/2W	79
R-8	126900	10kΩ ±10%, 1/2W	79
R-9	162891	27Ω ±5%, 1/2W	79
R-10	112546	2.7kΩ ±10%, 1/2W	79
R-11	162892	33Ω ±5%, 1/2W	79
R-12	168066	39kΩ ±5%, 1/2W	79
R-13	160123	680Ω ±5%, 1/2W	79

CODE	PART NO.	DESCRIPTION	FIG.
R-14	123301	1.1kΩ ±5%, 1/2W	79
R-15	126905	27kΩ ±10%, 1/2W	79
R-16	866521	390Ω ±10%, 1/2W	79
R-17	872379	1.2kΩ ±10%, 1/2W	79
R-18	165557	600Ω ±5%, 5W, Wirewound	79
R-19	161827	91Ω ±5%, 1W	79
R-20	127852	300Ω ±10%, 5W, Wirewound	79
R-21	872443	12kΩ ±10%, 1/2W	79
R-22	126900	10k ±10%, 1/2W	79
R-23	161828	18Ω ±10%, 1/2W	79
R-24	126900	10kΩ ±10%, 1/2W	79
R-25	161829	Bias Control	79
R-26	147756	1.8kΩ ±10%, 1/2W	79
R-27	178372	Volume Control	79
R-28	161830	1Ω ±5%, 2W, Wirewound	77
R-29	161830	1Ω ±5%, 2W, Wirewound	79
R-30	159633	25Ω ±10%, 25W	20
R-31	126394	4.7kΩ ±10%, 1/2W	79
R-32	78671	47kΩ ±10%, 1/2W	79
R-33	147756	1.8kΩ ±10%, 1/2W	79
R-34	872378	100Ω ±10%, 1/2W	79
R-35	161828	18Ω ±10%, 1/2W	79
R-36	126901	6.8kΩ ±10%, 1/2W	79
R-37	872443	12kΩ ±10%, 1/2W	79
R-38	112546	2.7kΩ ±10%, 1/2W	79
R-39	154868	500Ω ±10%, 2W	20
R-40	161857	Control—Frequency Response	79
R-41	164603	Potentiometer, 25kΩ	76
R-42	154868	500Ω ±10%, 2W, Wirewound	77
S-1	186949	Input Selector Switch	76
S-2	159435	Tone Control Switch	79
S-3	159533	Projector Control Switch	32
S-4, J-1	159445	Amplifier Control Switch / Threadlamp Socket	76
S-5	166142	Line Voltage Switch	15A
S-6	162455	Line Frequency Switch	15A
T-1	161836	Driver Transformer	78
T-2	166437	Power Transformer	19

PART NUMBERS IN NUMERICAL ORDER

NUMBER	CODE
78671	R-2
78671	R-6
78671	R-32
112546	R-10
112546	R-38
119816	R-7
123301	R-14
126101	R-1
126394	R-31
126900	R-4
126900	R-8
126900	R-22
126900	R-24

NUMBER	CODE
126901	R-36
126905	R-15
127852	R-20
136709	R-5
143229	C-14
145170	J-6
147756	R-3
147756	R-26
147756	R-33
147832	J-2
151383	CB-1
152129	C-32
154868	R-39

NUMBER	CODE
154868	R-42
159409	C-25
159410	C-9
159410	C-12
159413	C-7
159413	C-8
159413	C-29
159414	C-26
159416	C-15
159418	C-24
159419	C-27
159420	C-21
159422	QS-5

NUMBER	CODE
159422	QS-6
159422	QS-7
159429	J-3
159429	J-5
159430	J-4
159435	S-2
159445	S-4, J-1
159533	S-3
159551	P-1
159633	R-30
159634	C-18
159634	C-19
160123	R-13

NUMBER	CODE
161020	C-20
161021	C-22
161021	C-23
161022	C-1
161022	C-2
161022	C-4
161022	C-6
161022	C-16
161022	C-17
161827	R-19
161828	R-23
161828	R-35
161829	R-25

NUMBER	CODE
161830	R-28
161830	R-29
161831	C-11
161832	C-13
161835	Q-6
161835	Q-7
161836	T-1
161849	Q-5
161857	R-40
161858	C-3
162455	S-6
162891	R-9
162892	R-11

NUMBER	CODE
162893	Q-4
164193	CR-1
164193	CR-2
164193	CR-3
164193	CR-4
164603	R-41
164757	C-30
164757	C-31
164758	C-5
164758	C-28
165556	C-10
165557	R-18
166128	B-2

NUMBER	CODE
166142	S-5
166147	B-1
166437	T-2
168066	R-12
178372	R-27
184574	Q-1
184574	Q-2
184574	Q-3
186949	S-1
866521	R-16
872378	R-34
872379	R-17
872443	R-21
872443	R-37

Customer Equipment Services Division
EASTMAN KODAK COMPANY • ROCHESTER, N. Y. 14650
263-10-69-D
Pub. Pt. No. 636834
Printed in the United States of America