LEICINA

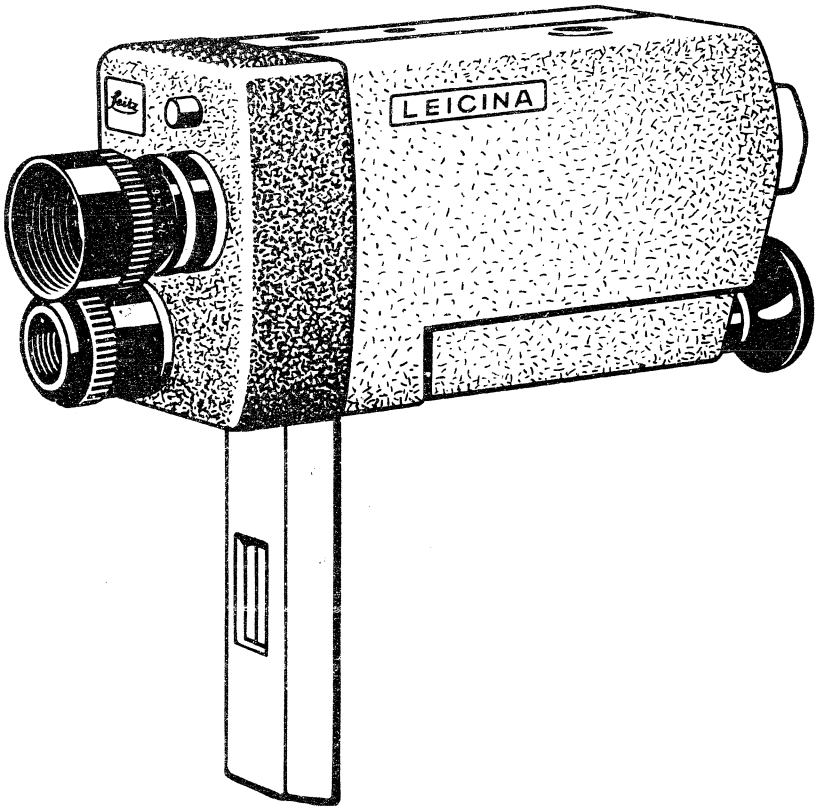

Reparaturanleitung
Servicing Instructions

Ersatzteilliste
Spare Parts List

ERNST LEITZ GMBH WETZLAR

LEICINA

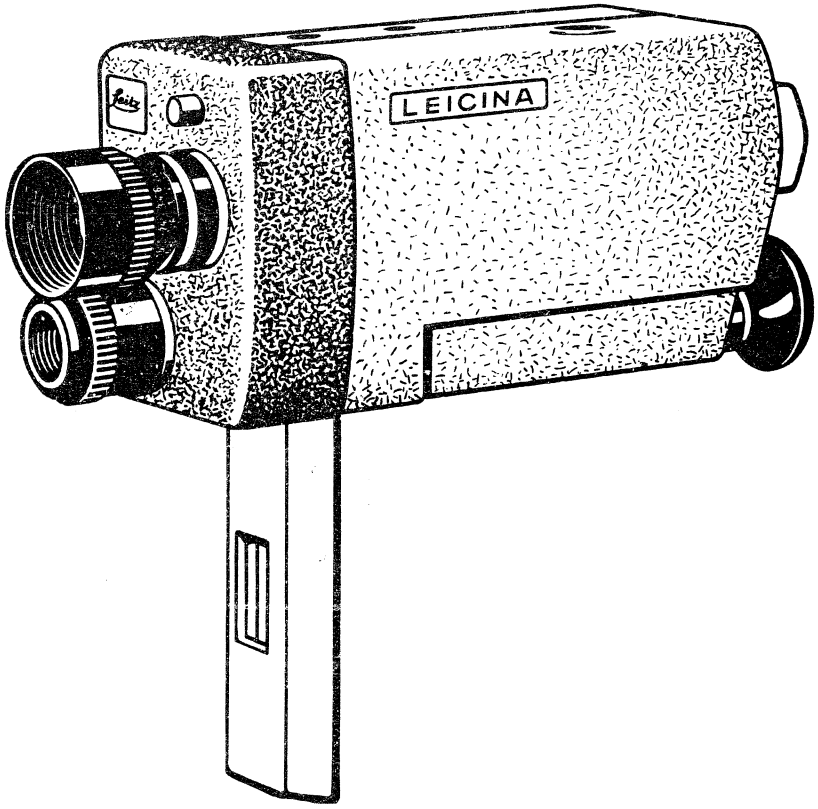

Reparaturanleitung
Servicing Instructions

Ersatzteilliste
Spare Parts List

ERNST LEITZ GMBH WETZLAR

Preisliste für Ersatzteile zur Leicina
Spare Parts Price List for the Leicina

TECHNISCHER KUNDENDIENST

30. 9.65

Seite Sheet	Teil-Nr. Part-No.	Preis-Gruppe Price-Group
1.1	08-27.40- 1	31
	08-27.40- 7	25
	08-27.40- 8	9
	08-27.40- 9	2
	08-27.40- 12	9
	08-27.40- 20	10
	08-27.40- 25	18
	08-27.40- 30	15
	08-27.40- 34	11
	08-27.40- 40	8
	08-27.40- 41	6
	08-27.40- 42	2
	08-27.40- 43	9
	08-27.40- 44	5
	08-27.40- 49	11
	08-27.40- 50	10
	08-27.40- 51	2
	08-27.40- 52	9
	08-27.40- 66	11
	08-27.40- 68	2
	15-11.33-5	11
	15-12.04-8/7	1
	10 x 4,2 x 0,4	4
	1,5 m 6 x 14 DIN 7	1
	1,4 x 3 DIN 1477	1
	1 x 12 DIN 1481	1
	2,3 DIN 6799	1
1.2	08-27.400-001	31
	08-27.400-007	25
	08-27.400-025	20
	08-27.400-047	7
	08-28.40-56	13
	08-28.40-57	9
	08-28.40-58	7
	08-30.40-17	11
	08-30.40-27	7
	08-30.40-28	6
	08-30.40-37	8
	2 x 18 DIN 1471	1
	1,5 x 5 DIN 1472	1
	2,5 x 10 DIN 1471	1
	16-14.042-20	4
2.1	08-27.20- 1	40
	08-27.20- 7	24
	08-27.20- 9	12
	08-27.20- 13	12
	08-27.20- 14	9
	08-27.20- 16	11
	08-27.20- 19	5

Seite Sheet	Teil-Nr. Part-No.	Preis-Gruppe Price-Group
2.1	08-27.20- 20	3
	08-27.20- 21	3
	08-27.20- 23	8
	08-27.20- 26	36
	08-27.20- 27	17
	08-27.20- 28	10
	08-27.20- 30	7
	08-27.20- 31	27
	08-27.20- 34	19
	08-27.20- 35	8
	08-27.20- 36	9
	08-27.20- 39	23
	08-27.20- 45	16
	08-27.20- 52	7
	08-27.20- 53	2
	08-27.20- 62	13
	08-27.20- 65	31
	08-27.20- 66	12
	08-27.20- 67	27
	08-27.20- 70	7
	08-27.20- 71	19
	08-27.20- 72	9
	08-27.20- 73	5
	08-27.20- 85	14
	08-27.20- 87	4
	08-27.20- 89	8
	08-27.20- 90	3
	08-27.200-060	12
	M 1,4 x 2,5 DIN 63	3
	M 1,7 x 2,5 DIN 551	3
	M 1,7 x 2,5 DIN 921	3
	M 2 x 3 DIN 551	3
	M 2 x 6 DIN 551	3
	M 2,6 x 4 DIN 551	3
	15-12.06-20/5	3
	15-12.06-35/1	4
	1 m 6 x 8 DIN 7	1
	1 m 6 x 10 DIN 7	1
	1,9 DIN 6799	1
2.2	08-27.20- 99	50
	08-27.20-100	25
	08-27.20-102	15
	08-27.20-103	11
	08-27.20-104	10
	08-27.20-107	4
	08-35.20- 1	50
	15-12.03-40/4	3
	15-12.03-52/1	3
	15-12.06-14/10	2
3.1	08-27.10- 37	16
	08-27.10- 45	13
	08-27.10- 48	24

Preisliste für Ersatzteile zur Leicina

Spare Parts Price List for the Leicina

Seite Sheet	Teil-Nr. Part-No.	Preis-Gruppe Price-Group
3.1	08-27.10- 60	14
	08-27.10- 61	9
	08-27.10- 63	12
	08-27.10- 78	8
	08-27.10- 79	8
	08-27.10- 80	8
	08-27.10- 82	49
	08-27.10-121	6
	08-27.10-125	10
	08-27.10-132	10
	08-27.10-137	16
	08-27.10-138	11
	08-27.10-139	7
	08-27.10-140	6
	08-27.10 E5	11
	08-28.10- 15	14
	305-24.28-01	43
	M 1,4 x 2 DIN 84	3
	M 1,4 x 6 DIN 84	3
	M 1,4 DIN 546 Ms	3
	M 2 x 2,5 DIN 84	3
	M 2 x 3,5 LN 120 19 Ms	3
	M 2 x 4,5 LN 120 19 Ms	3
	M 3 x 6,5 LN 120 19 Ms	4
	RL 3220 b / 2.5	3
	R 1 1 KΩ bis 13 KΩ 5 DIN 41 399	8
	R 2 16 KΩ 0,25 W ±10 % Klasse 5 axial	8
	R 4 1 KΩ bis 27 KΩ 5 DIN 41 399	8
	R 3 1 KΩ bis 51 KΩ 5 DIN 41 399	8
3.2	08-27.10-170	[redacted]
	08-27.10-174	9
	08-27.10-178	9
3.3	08-27.100-021	14
	08-27.100-022	9
	08-27.100-036	[redacted]
	08-27.100-041	34
	08-27.100-051	9
	08-27.100-055	7
	08-27.100-058	13
	08-27.100-059	3
	M 1,4 x 4 DIN 84	
4.1	08-27.10- 6	27
	08-27.10-10	31
	08-27.10-11	16
	08-27.10-12	8
	08-27.10-16	13
	08-27.10-20	1
	08-27.10-22	19
	08-27.10-23	12
	08-27.10-26	12
	08-27.10-27	18
	08-27.10-29	19
	08-27.10-31	5
	08-27.10-34	11
	08-27.10-64	22
	08-27.10-68	17
	08-27.10-67	18
	08-27.10-71	1
	08-27.10-73	9
	08-27.10-75	9
	M 2,6 x 5 DIN 553	3
	15-10.20-8	7
	15-10.264-8	7
	15-12.20-8/1	3
	15-12.21-5/1	4
	2 ⌀ III DIN 5401	1
4.2	08-27.100-006	27
5.1	08-27.30- 6	28
	08-27.30- 60	15
	08-27.30- 64	9
	08-27.30- 69	26
	08-27.30- 83	2
	08-27.30- 84	9
	08-27.30-104	15
	08-27.30-171	17
	08-27.30-176	8
	08-27.30-177	8
	08-27.30-192	7
	08-27.30-203	10
	08-27.30-204	12
	08-27.30-208	4
	08-27.30-262	15
	M 1,7 x 2 DIN 84	3
	M 1,7 x 3 DIN 84	3
	M 1,7 x 4 DIN 84	3
	M 3 x 6 DIN 84	3
	M 1,7 x 4 DIN 551	3
	M 2 x 4 DIN 551	3
	M 2,6 x 28 LN 120 19	3
	M 2,6 x 12 DIN 84	3
	M 2,6 x 12 DIN 931	3
	M 3 x 6 DIN 63	4
	1,5 x 5 DIN 1472	1
	1,5 x 10 DIN 1472	1
	1 x 5 DIN 1481	1
	15-12.03-32/6	1
	15-12.03-32/7	1
	15-12.03-32/8	1
	M 3 x 28 LN 120 19	3
5.2	08-27.30-267	28
	08-27.300-124	17
	M 1,7 x 2 DIN 84 Ms	3
5.3	08-27.30-280	26

TECHNISCHER KUNDENDIENST

30. 9.65

Preisliste für Ersatzteile zur Leicina

Spare Parts Price List for the Leicina

Seite Sheet	Teil-Nr. Part-No.	Preis-Gruppe Price-Group
6.1	08-27.30- 12	8
	08-27.30- 20	17
	08-27.30- 21	6
	08-27.30- 29	2
	08-27.30- 30	10
	08-27.30- 35	1
	08-27.30- 37	18
	08-27.30- 38	15
	08-27.30- 42	5
	08-27.30- 43	12
	08-27.30- 44	5
	08-27.30- 45	1
	08-27.30- 46	6
	08-27.30-180	27
	08-27.30-197	8
	08-27.30-202	9
	08-27.30-264	14
	08-27.30-265	11
	08-27.30-266	11
	08-27.30-270	9
	08-27.30-291	7
	08-27.30-999	7
	15-10.170-20	3
	15-12.03-21/1	1
	15-12.03-28/2	1
	M 1,7 x 2 DIN 553	3
	M 1,7 x 2,5 LN 120 19	3
	M 1,7 x 2,5 DIN 920	3
	1,5 DIN 6799	1
	1,9 DIN 6799	1
6.2	08-27.30-253	6
	08-27.30-254	15
	08-27.30-255	3
	08-27.30-256	5
	M 2 DIN 546	3
	1,8 DIN 125	1
	08-28.30- 13	30
	08-35.30-100	12
7.1	08-27.30 E2-19	4
	08-27.30 E2-20	4
	08-27.30 E6- 1	5
	08-27.30 E6- 2	5
	08-27.30 E6- 3	5
	08-27.30 E6- 7	5
	08-27.30 E6- 9	4
	08-27.30 E6-11	4
	08-27.30 E6-12	4
	08-27.30 E6-14	4
	08-27.30 E6-26	4
	08-27.30 E6-27	4
	08-27.30 E6-28	4
	08-27.30 E6-29	4
	08-27.30 252	33
	08-27.30- 54	16
	08-27.30-116	36
	08-27.30-117	14
	08-27.30-120	1
	08-27.30-121	12
	08-27.30-130	5
	08-27.30-134	12
	08-27.30-135	18
	08-27.30-136	9
	08-27.30-139	3
	08-27.30-144	3
	08-27.30-146	13
	08-27.30-152	7
	08-27.30-160	16
	08-27.30-286	38
	08-27.30-289	12
	302-23.45-4	12
	302-023.092-001	19
	302-050.031- 1	37
	302-050.031- 2	37
	302-051.003-001	22
	305-024.027-001	24
	M 1,7 x 2,5 DIN 920	3
	M 1,7 x 7 DIN 84	3
	M 2 x 2 DIN 923	3
	M 2 x 4 DIN 84	3
	M 2,6 x 4 LN 120 19	3
	M 2,6 x 10 LN 120 19	3
	15-10.170-27	5
	15-12.01-11/3	1
	15-12.02-19/1	1
	15-12.03-21/1	1
	1,5 x 5 DIN 1472	1
	1,5 DIN 6799	1
	A 1,2 x 0,2 x 4,5 DIN 7340	1
7.2	08-27.300-070	38
	08-27.300-071	14
	08-27.300-074	12
	302-050.042	37
	M1,7 x 4 DIN 84	3

TECHNISCHER KUNDENDIENST

30. 9. 65

Preisliste für Ersatzteile zur Leicina

Spare Parts Price List for the Leicina

Seite Sheet	Teil-Nr. Part-No.	Preis-Gruppe Price-Group
8.1	08-27.40- 8	9
	08-27.40- 9	2
	08-27.40-12	9
	08-27.40-34	11
	08-27.40-40	8
	08-27.40-41	6
	08-27.40-42	2
	08-27.40-43	9
	08-27.40-44	5
	08-27.40-66	11
	08-27.40-68	2
	08-28.40-20	11
	08-28.40-25	19
	08-28.40-35	11
	08-28.40-37	16
	08-30.40-52	9
	08-35.40- 1	32
	08-35.40- 7	25
	15-11.33-5	11
	15-12.04-8/7	1
	16-14.042-20	4
	1,5 x 12 DIN 1472	1
	1,4 x 3 DIN 1477	1
	1 x 12 DIN 1481	1
	2,3 DIN 6799	1
9.1	08-27.10- 37	16
	08-27.10- 45	13
	08-27.10-138	11
	08-27.10-139	7
	08-27.10-140	6
	08-28.10- 55	24
	08-28.10-143	10
	08-30.10-115	11
	08-30.10-117	17
	08-30.10-118	7
	08-30.10-119	7
	08-30.10-150	13
	08-30.10-151	8
	08-35.10 E5	12
	08-35.10-194	24
	302-23.90-01	20
	15-12.02-17/6	3
	M 1,4 x 6 DIN 84	3
	M 1,4 DIN 546	3
	M 1,7 x 20 DIN 920	5
	M 2 x 5 DIN 920	3
	R 1 1 KΩ bis 13 KΩ 5 % 5 DIN 41 399	8
	R 2 16 KΩ 0,25 W ± 10 % Klasse 5 axial	8
	R 3 13 KΩ bis 39 KΩ 5 % 5 DIN 41 399	8
	R 16, R 24 18 KΩ bis 1MΩ 5 DIN 41 399	8

Seite Sheet	Teil-Nr. Part-No.	Preis-Gruppe Price-Group
10.1	08-27.10- 75	9
	08-27.10-121	6
	08-28.10- 15	14
	08-28.10- 43	10
	08-28.10- 44	9
	08-28.10- 45	11
	08-28.10- 48	12
	08-28.10- 49	7
	08-28.10- 60	34
	08-28.10- 79	8
	08-28.10- 80	8
	08-28.10- 98	36
	08-28.10- 99	34
	08-28.10-161	21
	08-28.10-163	19
	08-28.10-164	14
	08-28.10-165	14
	08-28.10-166	17
	08-28.10-168	22
	08-28.10-201	19
	08-28.10-205	22
	08-35.10-101	28
	08-35.10-167	3
	305-24.29-1	43
	15-10.20-8	3
	15-10.20-15	3
	15-12.03-17/1	6
	15-12.03-21/2	1
	15-12.03-21/3	1
	M 1,4 x 10 DIN 84	3
	M 2 x 5 DIN 84	3
	M 1,4 x 2 DIN 553	3
	M 1,4 x 3 DIN 553	3
	M 2 x 6 LN 120 19	3
	M 1,4 x 2,5 LN 120 43	3
11.1	08-27.10- 10	31
	08-28.10- 16	32
	08-28.10- 35	14
	08-28.10- 36	18
	08-28.10- 54	11
	08-28.10- 92	23
	08-28.10- 93	23
	08-28.10- 95	[redacted]
	08-28.10- 96	24
	08-28.10-169	20
	08-28.10-170	20
	08-28.10-187	3
	08-28.10-189	21
	08-28.10-190	11

TECHNISCHER KUNDENDIENST

15. 3.65

Preisliste für Ersatzteile zur Leicina

Spare Parts Price List for the Leicina

Seite Sheet	Teil-Nr. Part-No.	Preis-Gruppe Price-Group
11.1	08-28.10-191	16
	08-35.10- 6	29
	M 1,7 x 2 DIN 553	3
12.1	08-27.30- 54	16
	08-27.30-117	14
	08-27.30-130	5
	08-27.30-134	12
	08-27.30-135	18
	08-27.30-138	9
	08-27.30-139	3
	08-27.30-144	3
	08-27.30-146	13
	08-27.30-160	14
	08-27.30-289	12
	08-30.30 E5	13
	08-30.30 E6- 1	5
	08-30.30 E6- 2	5
	08-30.30 E6- 3	5
	08-30.30 E6- 4	5
	08-30.30 E6- 5	5
	08-30.30 E6- 6	5
	08-30.30 E6- 7	6
	08-30.30 E6- 8	4
	08-30.30 E6-10	4
	08-30.30 E6-11	4
	08-30.30 E6-14	7
	08-30.30-50	40
	302-004.038-001	10
	302-23.45-4	12
	302-050.025-01	38
	305-024.027-001	24
	6,4 µF / 15V, EL 6,4/15D	12
	50 0,3 W ± 10 % Kl 5 ax	8
	M 1,7 x 7 DIN 84	3
	M 2 x 4 DIN 84	3
	M 1,7 x 2,5 DIN 920	3
	M 2 x 2 DIN 923	3
	1,5 x 5 DIN 1472	1
	1,5 DIN 6799	1
	A1,2 x 0,2 x 4,5 DIN 7340	1
	M 2,6 x 4 LN 120 19	3
	15-12.01-11/3	1
	15-12.02-19/1	1
	15-12.03-21/1	1
	Tesafilm 104 Rolle (66m)	18

Seite Sheet	Teil-Nr. Part-No.	Preis-Gruppe Price-Group
13.1	08-27.40- 8	9
	08-27.40- 9	2
	08-27.40-12	9
	08-27.40-20	10
	08-27.40-30	15
	08-27.40-34	11
	08-27.40-40	8
	08-27.40-41	6
	08-27.40-42	2
	08-27.40-43	9
	08-27.40-44	5
	08-27.40-66	11
	08-27.40-68	2
	08-27.400-025	20
	08-30.40- 1	32
	08-30.40- 7	25
	08-30.40-17	11
	08-30.40-27	7
	08-30.40-28	6
	08-30.40-37	8
	15-11.33-5	11
	15-12.04-8/7	1
	16-14.042-20	4
	1,5 m 6 x 14 DIN 7	1
	2,5 x 10 DIN 1472	1
	1,4 x 3 DIN 1477	1
	1 x 12 DIN 1481	1
	2,3 DIN 6799	1
13.2	08-30.400-001	32
	08-30.400-007	25
14.1	08-27.20- 16	11
	08-27.20- 23	8
	08-27.20- 28	10
	08-27.20- 31	27
	08-27.20- 34	18
	08-27.20- 36	9
	08-27.20- 45	16
	08-27.20- 52	7
	08-27.20- 53	2
	08-27.20- 62	13
	08-27.20- 65	31
	08-27.20- 66	12
	08-27.20- 67	27
	08-27.20- 70	7

TECHNISCHER KUNDENDIENST

15. 3.65

Preisliste für Ersatzteile zur Leicina

Spare Parts Price List for the Leicina

Seite Sheet	Teil-Nr. Part-No.	Preis-Gruppe Price-Group
14.1	08-27.20- 71	19
	08-27.20- 72	9
	08-27.20- 73	5
	08-27.20- 85	14
	08-27.20- 87	4
	08-27.20- 89	8
	08-27.20- 90	3
	08-27.20-100	25
	08-27.20-102	15
	08-27.20-103	11
	08-27.20-104	10
	08-27.20-107	4
	08-27.200-060	12
	08-30.20- 1	49
	08-30.20-19	38
	08-30.20-20	17
	08-30.20-22	9
	08-30.20-25	29
	1 m 6 x 8 DIN 7	1
	1 m 6 x 10 DIN 7	1
	M 1,4 x 2,5 DIN 63	3
	M 1,7 x 2,5 DIN 551	3
	M 2 x 3 DIN 551	3
	M 2 x 6 DIN 551	3
	M 2,6 x 4 DIN 551	3
	1,9 DIN 6799	1
	15-12.03-40/4	3
	15-12.03-52/1	3
	15-12.06-14/10	2
14.2	08-30.200-001	49
	08-27.200-005	25
	08-27.200-045	16
	08-27.200-061	15
	08-27.200-065	31
	08-27.200-066	12
	M 1,4 x 3,5 DIN 63	3
15.1	08-27.10- 37	16
	08-27.10- 45	13
	08-27.10- 48	24
	08-27.10-138	11
	08-27.10-139	7
	08-27.10-140	6
	08-28.10- 15	14
	08-30.10- 85	23
	08-30.10- 88	[redacted]
	08-30.10-109	16
	08-30.10-114	13
	08-30.10-117	17
	08-30.10-118	7
	08-30.10-119	7
	08-30.10-128	1

Seite Sheet	Teil-Nr. Part-No.	Preis-Gruppe Price-Group
	08-30.10-150	13
	08-30.10-151	8
	08-30.100- 89	[redacted]
	08-30.100- 92	33
	08-30.100-112	24
	302-23.90-01	20
	305-024.030-1	43
	M 1,4 x 4 DIN 84	3
	M 1,4 x 6 DIN 84	3
	M 2 x 6 DIN 84 Ms	3
	M 1,4 DIN 546	3
	M 1,7 x 20 DIN 920	5
	15-12.02-17/6	3
	R 1, R 2, R 3, R 4	8
15.3	08-30.102-110	24
	2 x 6 DIN 1472	1
16.1	08-27.10- 10	31
	08-27.10- 34	11
	08-27.10- 64	22
	08-27.10- 68	17
	08-27.10- 67	18
	08-27.10- 71	1
	08-27.10- 73	9
	08-27.10- 75	9
	08-30.10- 6	28
	08-30.10-134	[redacted]
	08-30.10-136	17
	08-30.10-138	17
	08-30.90-004	18
	08-30.90-005	18
	08-30.90-006	10
	101-22.20 626	24
	101-22.20 636	24
	101-22.21 633	14
	101-22.22 972	21
	101-22 V 142	5
	101-22 V 241	4
	15-10.20-8	3
	15-10.264-8	7
	15-12.20-8/1	3
	M 2,6 x 5 DIN 553	3
16.2	08-30.100-006	28
	08-30.100-078	[redacted]
	101-58.25 427	21
	101-58.25 429	24
	101-58.25 431	24
	101-58.25 434	14

TECHNISCHER KUNDENDIENST

30. 9.65

Preisliste für Ersatzteile zur Leicina

Spare Parts Price List for the Leicina

Seite Sheet	Teil-Nr. Part-No.	Preis-Gruppe Price-Group
17.1	08-27.30- 60	15
	08-27.30- 64	9
	08-27.30- 83	2
	08-27.30- 84	9
	08-27.30-104	15
	08-27.30-176	8
	08-27.30-177	8
	08-27.30-192	7
	08-27.30-203	10
	08-27.30-208	4
	08-27.30-262	15
	08-27.30-267	28
	08-27.30-280	26
	08-30.30-125	17
	15-12.03-32/6	1
	15-12.03-32/7	1
	15-12.03-32/8	1
	M 2 x 6 DIN 63	4
	M 1,7 x 2 DIN 84	3
	M 1,7 x 3 DIN 84	3
	M 1,7 x 4 DIN 84	3
	M 2,6 x 12 DIN 84	3
	M 3 x 6 DIN 84	4
	M 2 x 4 DIN 551	
	M 2,6 x 15 DIN 931	3
	1,5 x 5 DIN 1472	1
	1,5 x 10 DIN 1472	1
	M 2,6 x 28 LN 120 19	3
	M 3 x 28 LN 120 19	3
17.2	08-27.301-006	28
17.3	08-30.302-006	30
	08-30.302-155	15
18.1	08-27.30- 12	8
	08-27.30- 29	2
	08-27.30- 30	10
	08-27.30- 35	1
	08-27.30- 37	18
	08-27.30- 38	15
	08-27.30- 42	6
	08-27.30- 43	12
	08-27.30- 44	5
	08-27.30- 45	1
	08-27.30- 46	8
	08-27.30-180	27
	08-27.30-197	8
	08-27.30-253	6

Seite Sheet	Teil-Nr. Part-No.	Preis-Gruppe Price-Group
	08-27.30-254	15
	08-27.30-255	3
	08-27.30-256	5
	08-27.30-264	14
	08-27.30-265	11
	08-27.30-266	11
	08-27.30-270	9
	08-35.30-100	11
	1,8 DIN 125	1
	M 2 DIN 546	3
	M 1,7 x 2 DIN 553	3
	M 1,7 x 2,5 DIN 920	3
	1,5 DIN 6799	1
	1,9 DIN 6799	1
	M 1,7 x 2,5 LN 120 19	3
	15-10.170-20	3
	15-12.02-28/2	3
	15-12.03-21/1	1
18.2	08-30.302-030	14
	08-30.302-032	11
	08-30.302-037	7
	08-30.302-144	7
	08-30.302-146	6
	08-30.302-147	13
	08-30.302-148	7
	08-30.302-149	3
	08-30.302-151	11
19.1	08-27.30- 54	16
	08-27.30-117	14
	08-27.30-130	5
	08-27.30-134	12
	08-27.30-135	18
	08-27.30-138	9
	08-27.30-139	3
	08-27.30-144	3
	08-27.30-146	13
	08-27.30-158	7
	08-27.30-160	14
	08-27.30-289	12
	08-30.30 E5	13
	08-30.30 E6- 1	5
	08-30.30 E6- 2	5
	08-30.30 E6- 3	5
	08-30.30 E6- 4	5
	08-30.30 E6- 5	5
	08-30.30 E6- 6	5
	08-30.30 E6- 7	6
	08-30.30 E6- 8	4
	08-30.30 E6-10	4

TECHNISCHER KUNDENDIENST

30. 9.65

Preisliste für Ersatzteile zur Leicina

Spare Parts Price List for the Leicina

Seite Sheet	Teil-Nr. Part-No.	Preis-Gruppe Price-Group	Seite Sheet	Teil-Nr. Part-No.	Preis-Gruppe Price-Group
19.1	08-30.30 E6-11	4			
	08-30.30 E6-14	7			
	08-30.30-50	40			
	302-004.038-001	10			
	302-23.45-4	12			
	303-050.025-01	38			
	305-024.027-001	24			
	6,4 u F / 15 V, EL 6,4 / 15 D	12			
	50 0,3 W ± 10 % K1 5 ax	8			
	M 1,7 x 7 DIN 84	3			
	M 2 x 4 DIN 84	3			
	M 1,7 x 2,5 DIN 920	3			
	M 2 x 2 DIN 923	3			
	1,5 x 5 DIN 1472	1			
	1,5 DIN 6799	1			
	A1,2 x 0,2 x 4,5 DIN 7340	1			
	M 2,6 x 4 LN 120 19	3			
	15-12.01-11/3	1			
	15-12.02-17/1	3			
	15-12.02-19/1	1			
	15-12.03-21/1	1			
	15-12.10-26/5	2			
	15-12.10-26/6	2			
19.2	08-27.300-071	13			
	08-27.300-074	12			
	08-30.301-049	40			
	08-30.301-050	39			
	08-30.301-120	18			
	302-050.041	38			
	M 1,7 x 4 DIN 84	3			

TECHNISCHER KUNDENDIENST

30. 9.65

Inhaltsverzeichnis
Contents

Einführung, Gebrauchsanleitung für Klebemittel (siehe Rep.-Unterlagen z. Leica M2)
Introduction, Instructions for Adhesives (see Servicing Instructions for Leica M2)

Reparaturanleitung zur Leicina
Servicing Instructions for Leicina

Eichanleitung für Prüfgeräte (siehe Reparatur-Unterlagen zur Leica M2)
Instructions for Testing Gauging Equipments (see Servicing Instructions for Leica M2)

Ersatzteilliste — Blatt Nr / Sheet No
Spare Parts List

Leicina 8 S
- Motordeckel, Griff / Motor Cover, Handle → 1
- Spulendeckel, Maskenrohr, Filmuhr / Spool Cover, Graduated Dial Tube, Film Counter → 2
- Blendenautomatik, Objektiv, Fotowiderstände / Diaphragm Automatic, Lens, Photoresistances → 3
- Frontplatte, Beleuchtungsoptik, Spiegelstuhl / Front Plate, Illuminating Optics, Mirror Support → 4
- Platine, Blendenachse / Plate, Diaphragm Shaft → 5
- Andruckplatte, Friktionshülse / Pressure Plate, Friction Sleeve → 6
- Motor, Schalter / Motor, Switch → 7

Leicina 8 V
- Motordeckel, Griff / Motor Cover, Handle → 8
- Stufenschalter, Lötleiste, Fotowiderstände / Speed Setting Switch, Soldering Ledge, Photoresistances → 9
- Blendenautomatik, Grundobj., Spiegelstuhl, Objektivverst. / Diaphragm Automatic, Built-in Lens, Mirror Support, Lens-Focusing → 10
- Frontplatte, Beleuchtungsoptik, Variogon-Vorsatzobjektiv / Front Plate, Illuminating Optics, Lens Attachment Variogon → 11
- Motor, Schalter / Motor, Switch → 12

Leicina 8 SV
- Motordeckel, Griff / Motor Cover, Handle → 13
- Spulendeckel, Maskenrohr, Filmuhr / Spool Cover, Graduated Dial Tube, Film Counter → 14
- Blendenautomatik, Objektiv, Fotowiderstände / Diaphragm Automatic, Lens, Photoresistances → 15
- Frontplatte, Beleuchtungsoptik, Spiegelstuhl / Front Plate, Illuminating Optics, Mirror Support → 16
- Platine, Blendenachse / Plate, Diaphragm Shaft → 17
- Andruckplatte, Friktionshülse / Pressure Plate, Friction Sleeve → 18
- Motor, Schalter / Motor, Switch → 19

Introduction

This file contains repair instructions and spare parts list for the 8 mm Leicina movie camera.

The servicing instructions deal with assembly, adjustment and servicing procedures, explained by means of diagrams. The tools and testing equipment listed can be obtained through us. Repairs in the area of the front plate may only be carried out with the necessary testing equipment.

Cleaning of spare parts and secondary groups is carried out with rectified benzine, separate from the housing sections. Lacquered parts or parts with raised engraving must not be cleaned moist, but dry with chamois leather or a brush. If dust or dirt is present, in the rangefinding mechanism or viewfinder, blow this away by means of a rubber bulb.

Lenses and prisms must not come into contact with benzine, oil or grease!

The following lubricants are required and can be obtained only through us:

No 410 (Symbol △△△)	No 465 (Symbol ◒◒◒)
No 428 (Symbol I I I)	No 710 (Symbol ⊕⊕⊕)
No 460 (Symbol ⦶⦶⦶)	No 716 (Symbol ⊟⊟⊟)

Other lubricants are not permissable, since perfect functioning can only be guaranteed with lubricants that have been tested by us.

The following adhesives are required for repairs:

A	Araldit 103 Hardener 953 F	Messrs. Ciba, Basle, Switzerland
B	Sealing lacquer Thinner 13 652	Available only through Ernst Leitz G.m.b.H. Wetzlar
F	Teroson special fluid Terokal thinner	Available only through Ernst Leitz G.m.b.H. Wetzlar
E	Adhesive EC 880 Thinner MB	
U	UHU hard	UHU Works, H.u.M. Fischer, Bühl (Baden)
T	Trichlorethylene	

Parts, which according to the Spare Parts List are to be treated with adhesive must be free from grease. Remnants of adhesive are to be removed with the corresponding thinner. Perfect adhesion can only be achieved if the instructions are followed. (See sheets pertaining to repair of Leica M2.)

In the Spare Parts List a Components List accompanies each illustrated sheet. On the illustrated sheet the components and secondary groups are shown in the correct assembly sequence. Parts to which adhesive or lubricant is to be applied are clearly marked with symbols (e.g. ⦶⦶⦶) or letters (e.g. "F").

The components list also includes the catalogue No. required when ordering, the nomenclature for the part in question, as well as the quantity required for the respective Leicina model.
The part Nos. shown with the illustrations correspond to those shown in the components list.

If a spare part e.g., a pressure plate is to ordered, proceed as follows. Since the pressure plate is mounted on the plate, it will be found on page 5 (see table of contents).

The spare parts are shown up in the components list in numerical order. The order for a pressure plate reads as follows:

Pos.	Stück	Preis / St. DM	Bestell-Nr.	Benennung
1	10	4.40	08-27.30-37	pressure plate, compl.

For exchange of a pressure plate see table of contents of the repair instructions.

Only such parts or secondary groups as are shown can be obtained. The front plate can only be supplied if the damaged part is returned.

Note

The modifications are indicated by „Prüf" Numbers, which will be found on the inside of the plate after removal of the motor cover.
If a camera has to be reverted to a modification of a higher „Prüf" No. on the occasion of a repair, this number must be added to the original „Prüf" Number stamped on the plate.

All cameras without Prüf No. and with Prüf No. 10 must be converted to modification 11 while being repaired (see Repair Instructions, Sheet 18).

Basic state 11

States 12 to 14: numbers not taken up.

State 15

New lock in the spool cover and film brake on the plate.
Film channel, lateral guide spring, film pressure plate and film pressure have been changed; this made a more accurate and stable lens adjustment possible, reduced the current consumption, and increased functional reliability in cold weather. In order to offer increased protection against the entry of light, the lock in the cover of the spool has been improved; this required a change in the casting of the plate and the cover. In order to improve the steadiness of the take-up friction, the take-up spindle and the friction have been changed. The film brake prevents unreeling of the film on the loaded spool during insertion. It is disconnected when the spool cover is placed in position. The adjustable bearing lug has been introduced to facilitate operation. The limitation of the release travel of the single-frame operation increases functional reliability. Conversion of cameras to Prüf 15 is not possible. Only the film limit and the travel limit for single-frame operation can be subsequently built in (see Repair Instructions, Sheet 56.1).

State 16

New reversing lever in the motor cover. In order to make focusing easier the pre-sighting screen in the viewfinder has been fitted with a reflo-disc. The grip has been fitted with a push-button lock. The reversing knob on the underside of the motor cover has been changed into a lever on the rear part of the cover, so that the switch can be operated also from the tripod.

State 17

The outer sign of recognition is the protruding screw ring of the built-in lens. This change shall make the camera more resistant against shocks, especially when the camera is dropped; simultannously the ratchets, the locking spring and the press button have been changed. A subsequent conversion of cameras below Prüf 17 is not possible.

30.9.65

Note

The modifications are indicated by „Prüf" Numbers, which will be found on the inside of the plate after removal of the motor cover.
If a Leicina is converted to a modification of a higher „Prüf" No. on the occasion of a repair, this number must be added to the original „Prüf" number stamped on the plate.

Basic state 1

State 2

The eyepiece has a coarser pitch and a dioptric scale. The attachment of the footage scale has been altered. Subsequent conversion would require a new spool cover. The attachment front plate - plate was changed, and the stud has been omitted. The viewfinder exit prism has been widened and built into a new holder. The casting of the motor cover has been altered and the arresting stud omitted.

State 3

State 3 is externally recognized by the automatic film thread. Guide friction sleeve and feed spindle have been altered. A tilting device guiding the film into the slot of the spool has been added. Conversion is possible (see Repair Instructions, Sheet 60). The front plate now has a printed circuit and a reinforced lens tube.

Ernst Leitz GmbH Wetzlar	Servicing Instructions for the Leicina 8 S	Sheet 1 to 49

Index of Servicing Instruction Sheets

Description	Sheet	Remarks
Removal and Assembly of the Cover Plate	1	
Exchanging the Motor	2	
Adjustment of the Rotary Magnet Measuring Mechanism	3	
Exchange and Adjustment of the Switch	4	
	5	
	6	
Testing Power-Intake	7	
Exchange of the Film Pressure-Plate	8	
	9	
Sticking on the Adhesive Covering Foil	10	
Testing the Running Speed	11	
Testing the Dygon f/2 15 mm Lens	12	
Mounting the Rubber Eyepiece	13	
Adjusting the Front Plate	14	
	15	
	16	
	17	
Modifying the Leicina to Prüf 11	18	
Exchange of the Shutter Spindle	19	
Scraping the Film Channel and Replacing the Lateral Guide Spring	20	
	21	
Testing the Friction	22	
	23	
Exchanging the Diaphragm Measuring Mechanism and the Dygon	24	
Lens	25	
Aligning the Dygon f/2 15 mm Lens	26	
	27	
Alignment of Viewfinder Exit on Dygon f/2 15 mm Lens	28	
	29	
Adjusting the Claw	30	
	31	
	32	
	33	
Exchanging the Motor	34	
	35	
Adjustment of the Stop Indicator and Viewfinder	36	
	37	
	38	
	39	
	40	

TECHNISCHER KUNDENDIENST

15. 3. 65

Ernst Leitz G m b H Wetzlar	Servicing Instructions for the Leicina 8 S	Sheet 50 to 99

Index of Servicing Instruction Sheets

Description	Sheet	Remarks
Elimination of Film Transport Failures (Friction)	50	
Eliminating Entrance of Stray Light (Spool Cover and Plate)	51	
	52	
Installation of the Film Guide Plate	53	
Installation of Film Guide Rail	54	
Preventing Entry of Stray Light	55	
Mounting the Safety Lever for the Feed Spool	56	
	57	
Installation of the Grip with Lock in the Motor Cover	58	
	59	
Installation of the Film Thread Mechanism	60	

TECHNISCHER KUNDENDIENST

15. 3. 65

Ernst Leitz G m b H Wetzlar	Servicing instructions for the Leicina 8 S, 8 V and 8 SV	Sheet 100 to 149

Index of servicing instruction sheets

Description	Sheet
Testing and exchanging the viewfinder beam splitter 08-28.10-99	100
	101
	102
	103
Adjusting the stop indicator	104
Testing the speed	105
	106
Adjusting the front plate	108
	109
	110
	111
	112
Exchanging the motor (8 V, 8 SV)	113
	114
Elimination of functional failures	115
	116

TECHNISCHER KUNDENDIENST

12. 1.68

Ernst Leitz GmbH Wetzlar	Servicing Instructions for the Leicina 8 SV	Sheet 150 to 199

Index of Servicing Instructions Sheets

Description	Sheet
Adjusting the Front Plate	150
	151
	152
	153
Exchanging of the Zoom-attachment	154

Removal and Assembly of the Cover Plate

Sheet 1

Tools

1. Wrench 08-27.40-66 W1
2. Screw driver 3.5 mm dia.

Procedure

Loosen screw of motor cover with wrench 08-27.40-66 W1. Remove motor cover.

Take out battery.

Remove one screw each M 3 x 4 LN 120 21 and 15-10.170-27* with screw driver 3.5 mm dia., lift off cover plate 08-27.30-171 (see fig. 1.1) carefully. Screw immediately screw 15-10.170-27 in the corresponding threaded hole in motor and unscrew only when the coverplate is to be placed in position.
Caution! The motor must not be actuated when the screw has been removed!

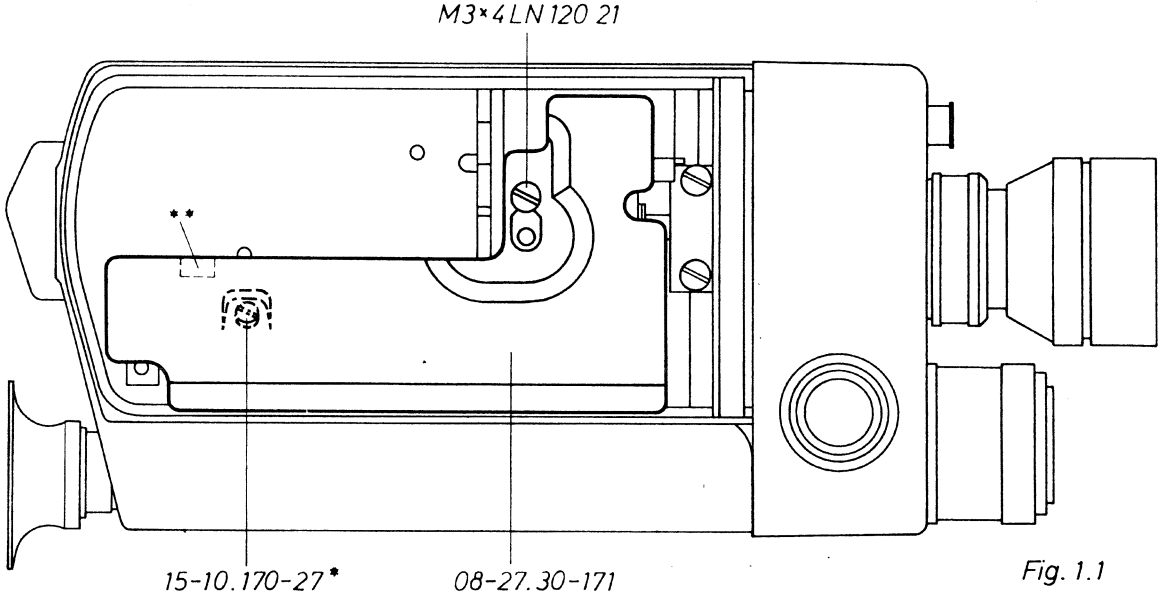

Fig. 1.1

Mount the cover foil in reverse sequence, ensuring at the same time that the soldered connections are not ruptured.
After mounting and securing the motor cover, check that the motor cover lies straight on the screw-head of the securing screw of the cover foil. If necessary, this can be brought about by adding a washer 15-12.03-32/6 or 7 or 8 between screw-head and cover foil (see Spare Parts List, sheet 5).

*Up to Leicina No 5 600 only

**When receiving coverplate as spare for cameras below No. 5 600 remove this fin.

Exchanging the Motor

Sheet 2

Tools

1. Assembly apparatus 08-27.30-116 W1
2. Soldering iron
3. Screw driver 3.5 mm dia.

Sequence of Operation

Remove coverplate (see sheet 1.1).

Remove spool cover and spool. Remove adhesive covering foil 08-27.30-262.

Unscrew two screws M 2.6 x 4 LN 120 19 on the motor base 08-27.30-117 from the underside of the plate with screw driver 3.5 mm dia. Lift up motor 08-27.30-116 and unsolder four soldered connections (see fig. 2.1). Remove motor.

Unscrew one screw M 2 x 2 DIN 923 from motor base with screw driver 3.5 mm dia. Remove intermediate wheel 08-27.30-121 and washer 2.2 DIN 125. Unscrew four screws M 2 x 2 DIN 84 and remove motor base (see fig. 2.1).

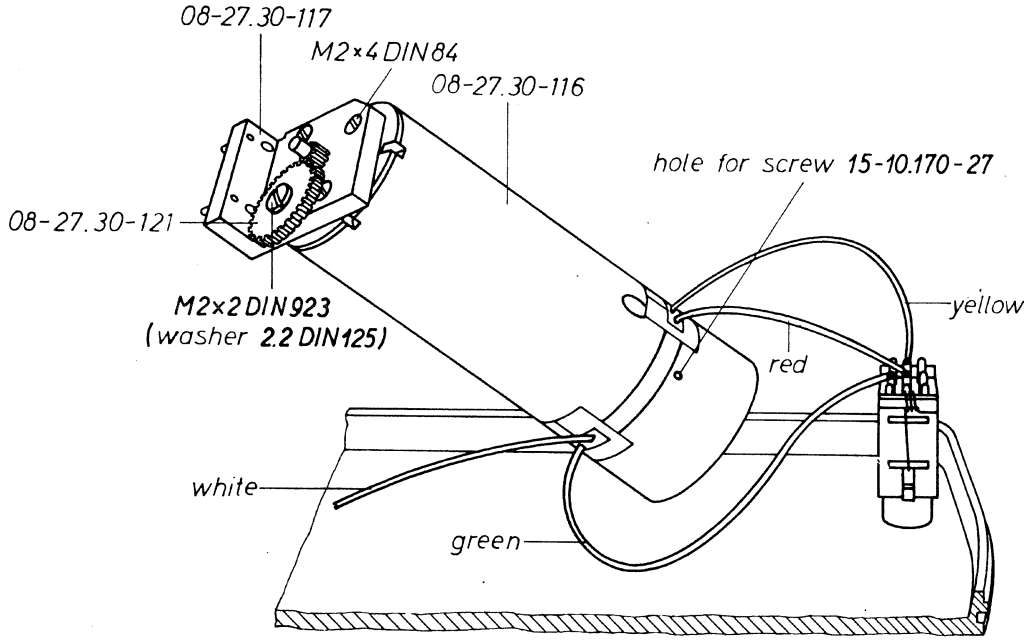

Fig. 2.1

Place the new motor, together with the motor base in the assembly apparatus 08-27.30-116 W1. Align the drilled hole for the screw 15-10.170-27 and that in the motor base respectively to the slot in the motor. Then secure four screws M 2 x 4 DIN 84. Place on washer 2.2 DIN 125 and intermediate wheel 30-121 and secure screw 2 x 2 DIN 923.
Resolder cable with soldering iron (see fig. 2.1). Secure the motor base to the plate with two screws M 2.6 x 4 LN 120 19.
When replacing the coverplate 08-27.30-171, ensure that soldered connections are not dislocated.

With battery inserted, check power-intake and general functioning in all parts.

When repair has been carried out stick on adhesive covering foil 08-27.30-262 (see sheet 10.1).

Adjustment of the Rotary Magnet Measuring Mechanism

Sheet 3

Tools

1. Screw driver 2.2 mm dia.
2. Testing set for electric drive 08-27.00 Z1 W8

Sequence of Operation

Remove spool cover.
Loosen screw on motor cover with spanner 08-27.40-06 W1. Remove motor cover.
Take out battery.

Insert accumulator of the testing set for electric drive 08-27.00 Z1 W8 into Leicina.

Set lever of testing set to 4.4 volts.
Operate release for continuous running.
Indicator of rotary magnet measuring instrument must stand on the dividing line between the red and white areas.

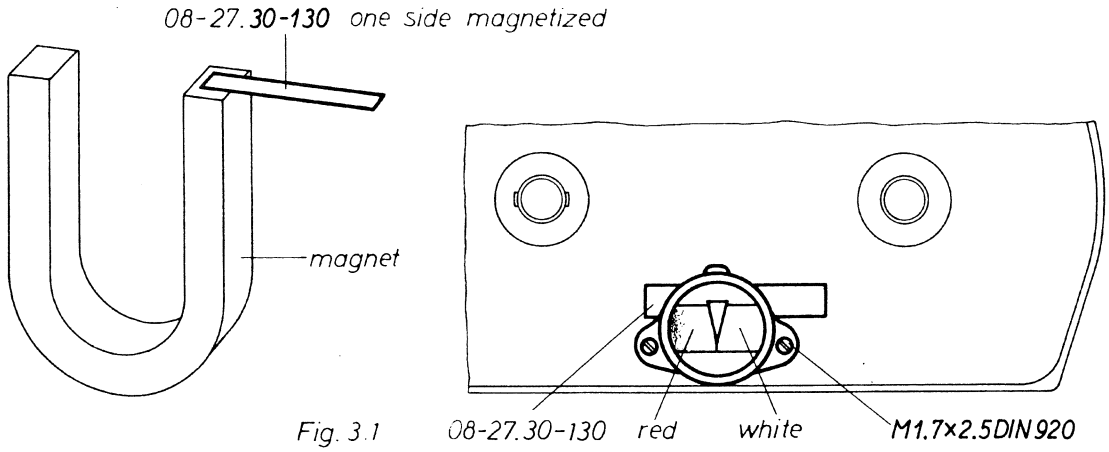

Fig. 3.1

Should adjustment be necessary, the following procedure must be adopted:

Loosen two screws M 1.7 x 2.5 DIN 920 with screw driver 2.2 mm dia. Lift rotary magnet measuring instrument slightly and insert washer 08-27.30-130 (one side magnetized). Operate release for continuous running and, whilst doing so, alter the position of the washer until the indicator stands on the dividing line between red and white areas (see fig. 3.1). Then retighten two screws M 1.7 x 2.5 DIN 920.

Exchange and Adjustment of the Switch

Sheet 4 to 6

Tools

1. Spanner 08-27.40-66 W1
2. Working cover 08-27.00 Z1 W7
3. Screw driver 3.5 mm dia.
4. Tweezers
5. Cable release

Sequence of Operation

Loosen screw on motor cover with spanner 08-27.40-66 W1. Remove motor cover.
Take out battery.
Remove cover plate (see sheet 1.1).
Strip off adhesive covering foil 30-174.

Unscrew two screws M 2.6 x 4 LN 120 19 with screw driver 3.5 mm dia.

Bend switch bracket 08-27.30-135 upwards and unsolder faulty micro-switch 302-23.45-4. Unscrew two screws M 1.7 x 7 DIN 84 with screw driver 3.5 mm dia., remove two washers 15-12.01-11/3 and micro-switch 302-23.45-4 (see fig. 4.1).

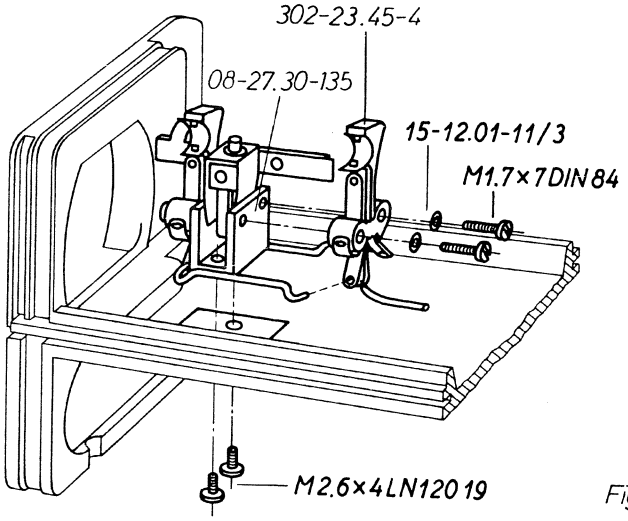

Fig. 4.1

Assembly of the micro-switch is best carried out in reverse sequence.

Adjusting the Switch

Single-frame Transport

The switch contacts should correspond to the initial position portrayed in fig. 7.1. When the checking device 08-27.30-146 is moved to the right, contact must take place before the checking device leaves the left stop (see fig. 5.1). When the checking device has left the stop, rotation of the diaphragm axis ensues until the right stop strikes the checking device (see fig. 6.1).

Exchange and Adjustment of the Switch

Continued from sheet 4

Should contact not take place as described, contacts must be bent accordingly with tweezers.

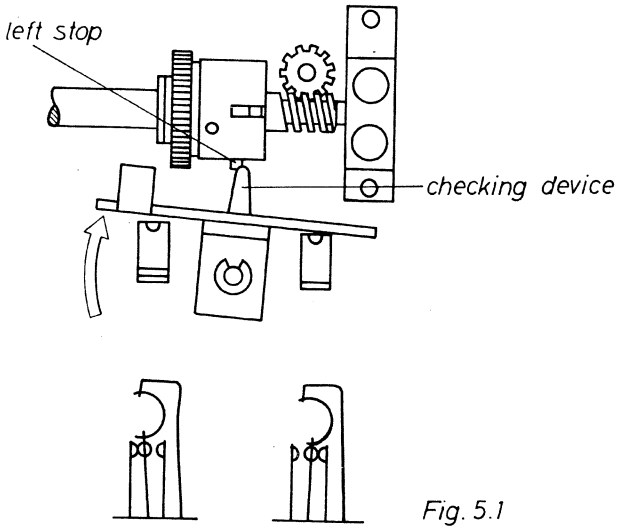

Fig. 5.1

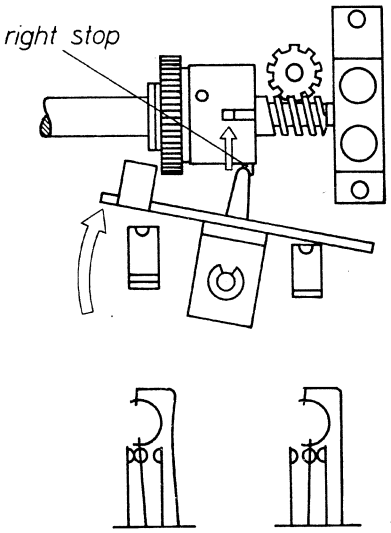

Fig. 6.1

Continuous Running

The initial position for continuous running is once more shown in fig. 7.1. When the checking device 08-27.30-146 moves to the left, contact takes place, after the checking device has left the orbit of the left stop. Continuous rotation of to diaphragm axis now ensues. From this position move the checking device 30-146 very slowly back into the initial position. Whilst so doing, ensure that the checking device still touches the rotating left stop, before contact is broken. If needs be, the contacts must be bent accordingly with tweezers (see fig. 8.1).

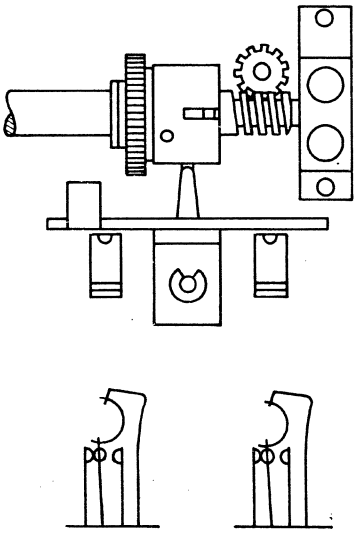

Fig. 7.1

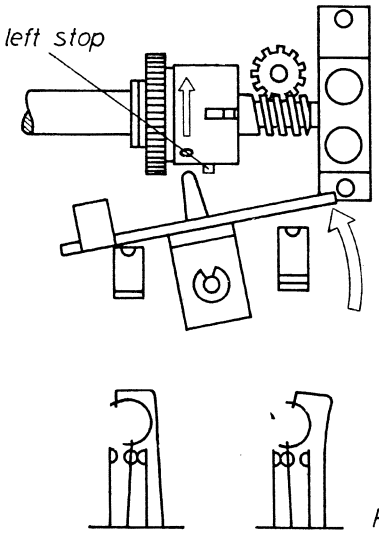

Fig. 8.1

Exchange and Adjustment of Switch

Continued from sheet 4 and 5

Repeat the above-described adjustment operation with working cover 08-27.00 Z1W7 slid on. Use cable release for release.

Permit the checking device to return very slowly by means of a cable release both for single-frame shots and for continuous running. When so doing, care is be taken that the contact is broken after the diaphragm axis has been brought to a halt by the checking device.

In case of single-frame shots with the cable release, allow the checking device to return swiftly. A further release must be achieved without any difficulty.

Check power-intake (see sheet 7).
Replace cover plate (see sheet 1).
Stick on adhesive covering foil (see sheet 10).
Insert battery.
Replace motor cover and secure with spanner 08-27.40-66 W1.

Testing Power-Intake

Sheet 7

Testing set

1. Testing set for electric drive 08-27.00 Z1 W8
   Battery housing for above with cable 08-27.00 Z1 W8 U5

Sequence of Operation

Remove motor cover.

Take out battery and film-spool.

Connect testing set for electric drive to electric light current with connecting flex and switch on. Connect battery housing 08-27.00 Z1 W8 U5 to set and insert in camera.

Set lever to testing set to 5.2 volts. Depress camera release:

The reading on the measuring instrument should be below 60 milliamps. when camera is idling.

Should reading on the measuring instrument be higher than shown above, a too high degree of friction is present.

Possible reasons:

Claw has too little play (see sheet 30).
Space between motor slot and gear wheel is incorrect (see sheet 2, assembly apparatus 08-27.30-116 W1).
Diaphragm axis drags, sticks, or has too little play axially.

Exchanging the Pressure Plate

Sheet 8 and 9

Tools

1. Feeler gauge 10-120 grammes
2. Insert stirrup 08-27.30-37 W3
3. Gauge 08-27.00 Z1 A9

Sequence of Operation

Detach spool cover.
Disengage locking pin and swivel same towards the take-up spool core (see Fig. 9.1).
Remove lock washer 1.9 DIN 6799 and lift pressure plate upwards to detach.
Assemble pressure plate.
After fitting on the lock washer 1.9 DIN 6799 check that the pressure plate is free from axial play. If required, align by means of washer 15-12.03-21/1 (see Fig. 9.1).

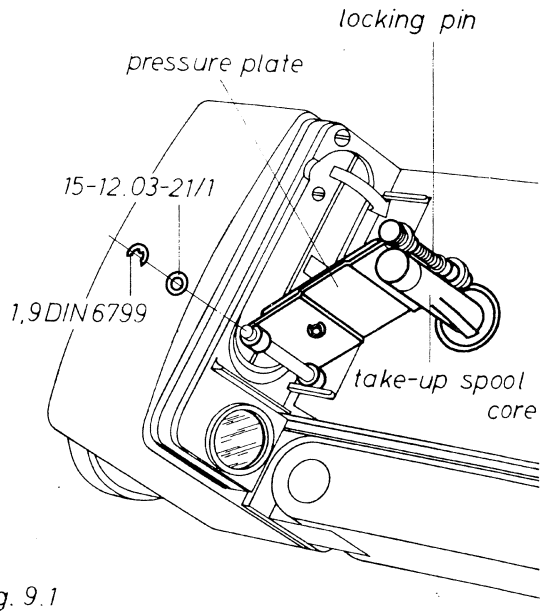

Fig. 9.1

When the locking pin has engaged insert a piece of film in the film channel. Take care that the claw is not "in mesh"; if necessary alter the position of the claw by turning the intermediate wheel accordingly.
Insert the feeler gauge in a perforation of the end of the film which has been thrust through and draw the film through the film channel without, however, tilting it. The reading on the feeler gauge should lie between 60 and 80 grammes.
Using gauge 08-27.00 Z1 A9, check that the space between film channel and ridge of the pressure plate does not lie below 0.3 mm or exceed 0.5 mm (see Fig. 10.1).

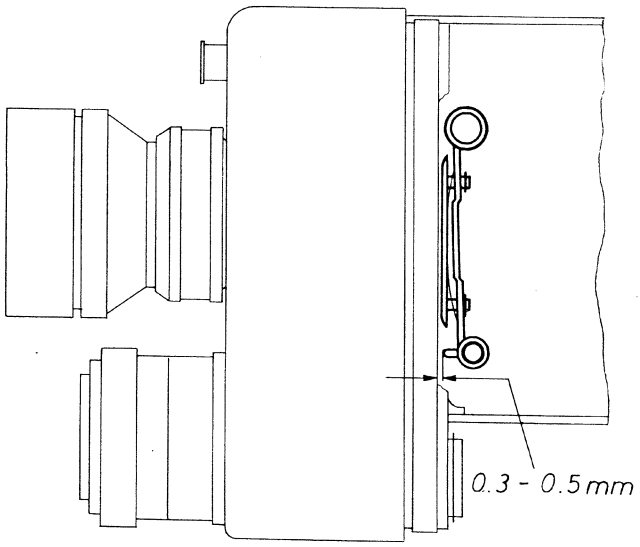

Fig. 10.1

Exchanging the Pressure Plate

Continuation of sheet 8

If necessary, align the guide rail by means of a wooden or plastic hammer (do not file down!). Ensure that the engaging pin is situated in the bore-hole of the plate and that the swivelling flap is parallel to the film channel.

Introduce insert stirrup 06-17.36-37.43 between pressure plate and lock washer (see Fig. 11.1). Using the feeler gauge, force the pressure plate towards the take-up spool core for about 0.5 mm by means of the insert stirrup and ascertain whether the tractive force lies at 90 ± 10 grammes. If required, tension or slacken the pressure spring.

Dismantle the pressure plate (see Fig. 9.1).
Remove lock washers 1.5 DIN 6799, pressure plate and pressure spring.
Adjust the tension of the pressure spring as necessary by hand.

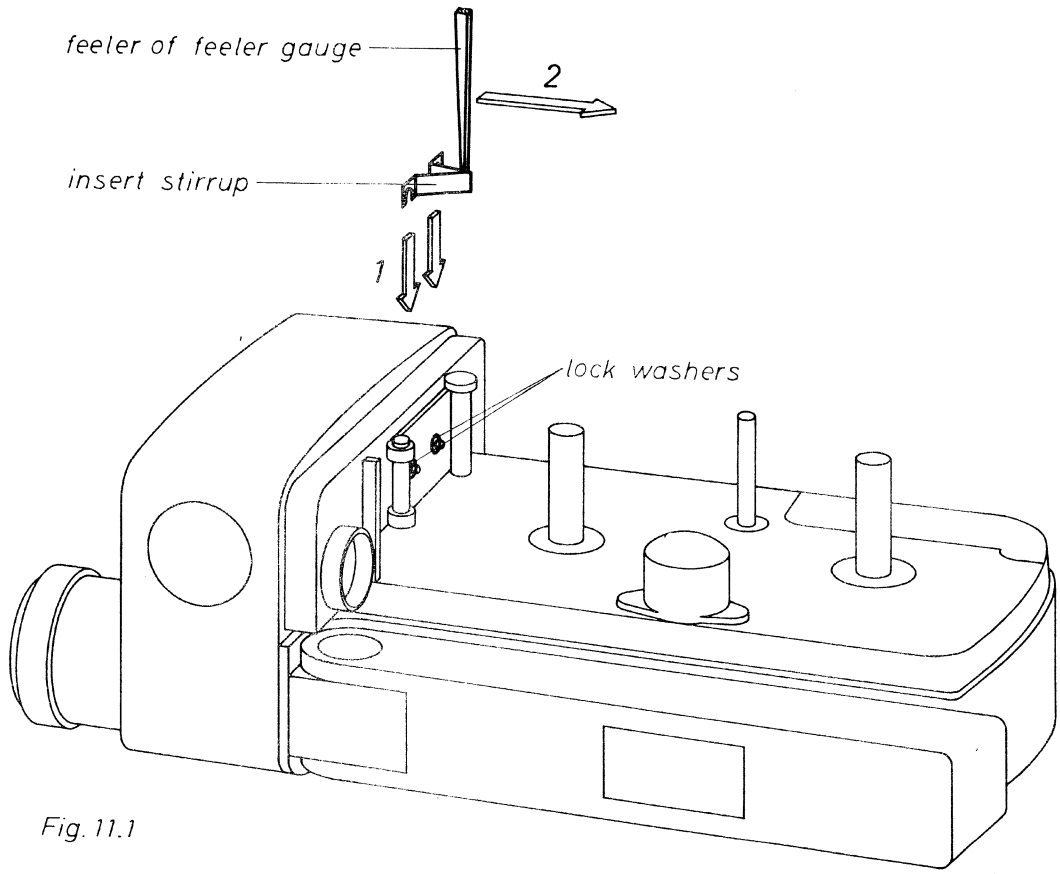

Fig. 11.1

Installation of the pressure spring and pressure plate is best carried out in reverse sequence.

Caution!
It is imperative to check the alignment of the lens before completion of work on the pressure plate (see sheet 12.1).

Sticking on the Adhesive Covering Foil

Sheet 10

Aids

1. Trichlorethylene ("tri")
2. Scissors

Sequence of Operation

Free the surface of the plate of dirt and old adhesive by means of tri, to receive the adhesive covering foil (08-27.30-262).

Moisten the reverse of the covering foil with tri. Apply the covering foil to the plate, straighten out and press down.

The new design of adhesive covering foil may be used for Leicinas to Prüf 15, when the shaded portion, as shown in fig. 12.1, has been removed with scissors.

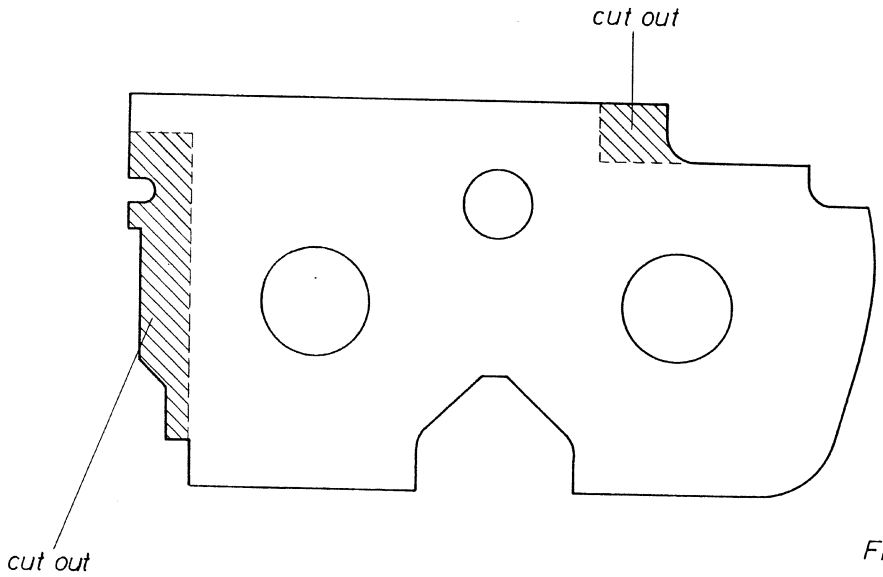

Fig. 12.1

Testing the Running Speed

Sheet 11

Tools

1. Frame frequency-and lens matching set 08-27.00 Z1 W14
2. Cable release

Sequence of Operation

Set telescope graduation scale to position "0" on the frame frequency-and lens matching set 08-27.00 Z1 W14,
engage lever at 16,
switch on knob on transformer,
focus eyepiece on cross-hairs (hold a piece of white paper obliquely in front of the telescope lens).

Load Leicina with test film.
Check battery tension on the galvanometer, (Indicator must lie within white area). Close automatic exposure system beyond 9.

Place Leicina on stage of test set, so that camera lens is positioned opposite the lens of the test set.

With cable release operate on "continuous running".

Both light-strips which are visible in the eyepiece and arranged one above the other in a circular position, must turn in opposed directions (see fig. 13.1).

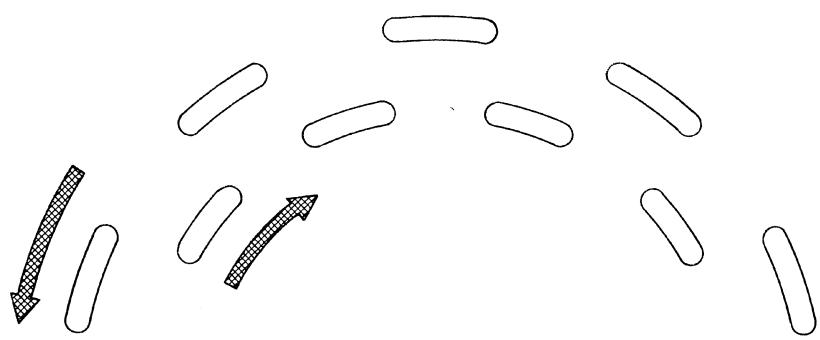

Fig. 13.1

The permissable tolerance limit is reached, when one arc of light stops.

If both arcs turn in the same direction, a fault is indicated.

Possible causes for indication of fault,

if both arcs turn to the right:
Battery-or nickel-cadmium battery tension too weak;
Friction within the drive mechanism too high (see "Testing of Incoming Current", sheet 7.1).

If both arcs turn to
Exchange motor (see sheet 2.1).

Testing the Dygon f/2 15 mm Lens

Sheet 12

Testing Device

1. Frame frequency and lens alignment set 08-27.00 Z1 W14
2. Test film

Sequence of Operation

Clear the film channel of any film-deposit.

Load the Leicina with a test film, close down the automatic exposure to beyond 9 DIN or 6 (ASA) and remove motor cover.
Set up the Leicina on the testing device in such away that the camera lens is positioned opposite the telescope of the testing device.

Switch on the transformer on the frame frequency and lens alignment set 08-27.00 Z1 W14.
Focus the eyepiece sharply on the crosshairs (hold white paper oblique to the telescope lens).

Engage lever - right of the eyepiece - at the engraved cross.

By circulating motor adjust the telescope of the testing device until the cross which is reflected in the eyepiece appears sharp.

Read off the imaged value on the telescope scale.

The permissable tolerance margin when testing the Dygon f/2 15 mm lens is:

+0.02 mm = +5.5 graduations
-0.02 mm = -5.5 graduations (see Fig. 14.1).

Repeat this setting several times.
Should the deviation be greater than the tolerance shown above, alignment must be carried out (see sheet 26).

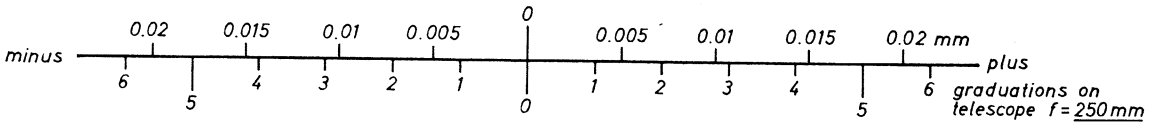

Fig. 14.1

Mounting the Rubber Eyepiece

Sheet 13

Tools and Aids

1. Screwdriver 1.4 ⌀
2. Wax, grey VII

The Following Parts are Required

1.	Rubber eyepiece	08-27.200-060
2.	Securing ring	08-27.20-62
3.	3 threaded pins	M 1.7 x 2.5 DIN 551

Sequence of Operation

Remove spool cover.
Slacken stop screw for the eyepiece by about two turns using screwdriver 1.4 ⌀. Unscrew eyepiece (see Fig. 14.1).

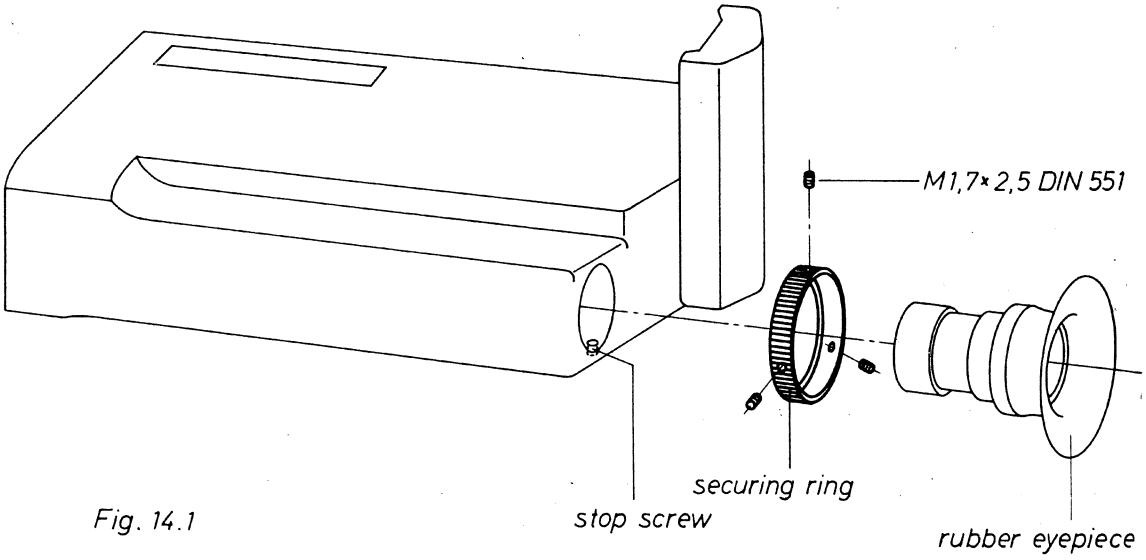

Fig. 14.1

Before affixing the rubber eyepiece to the eyepiece proper, remove any remnants of adhesive still present in the securing groove for the rubber eyepiece.
Press the securing ring firmly over the eyepiece and on to the rubber eyepiece.
Using screwdriver 1.4 ⌀ screw in three threaded pins.
Screw eyepiece into the spool cover. Tighten stop screw and seal off borehole with wax, grey VII.

Adjusting the Front Plate

Sheet 14, 15, 16 and 17

Tools, testers and accessories

1. Screw driver 3,5 ø
2. Spanner 5 mm
3. Test lamp 08-27.10 Z1 W 5
4. Reading instrument with resistance preselection 08-27.10 Z1 W13
5. Soldering iron
6. Graphite
7. Brass forceps
8. Magnifier

Procedure

Calibrate the test lamp and reading instrument with resistance preselection (see Calibrating Instructions, Spare Parts List for the Leica M2, Sheet 6).
Replace the black sqare engraved 8V / 8SV on the front plate of the reading instrument by the plate engraved 8S. Connect the short cable of the multiple plug with the socket screwed onto the multiple plug (see Fig. 15.1).
Remove the motor cover and the spool cover. Unscrew a hexagon nut with the 5 mm spanner (see Fig. 77.1).
Unscrew two cylindrical head screws with the screwdriver 3,5 ø. Remove front plate.
Unscrew the battery knob on the front plate, take out the battery. Set film speed of 15° DIN on the DIN ring of the illuminating optics. Rotate the illuminating optics anti-clockwise until the red line is situated a few mm from the red circle. Turn the illuminating optics back until they engage.
Place front plate seating of test light on to felt strip over keys (see Fig. 15.1).
Pull contactor in direction of indicator (1). Place front plate on to front plate seating and position by depressing pressure device. Push contactor in direction of arrow (2) and secure.

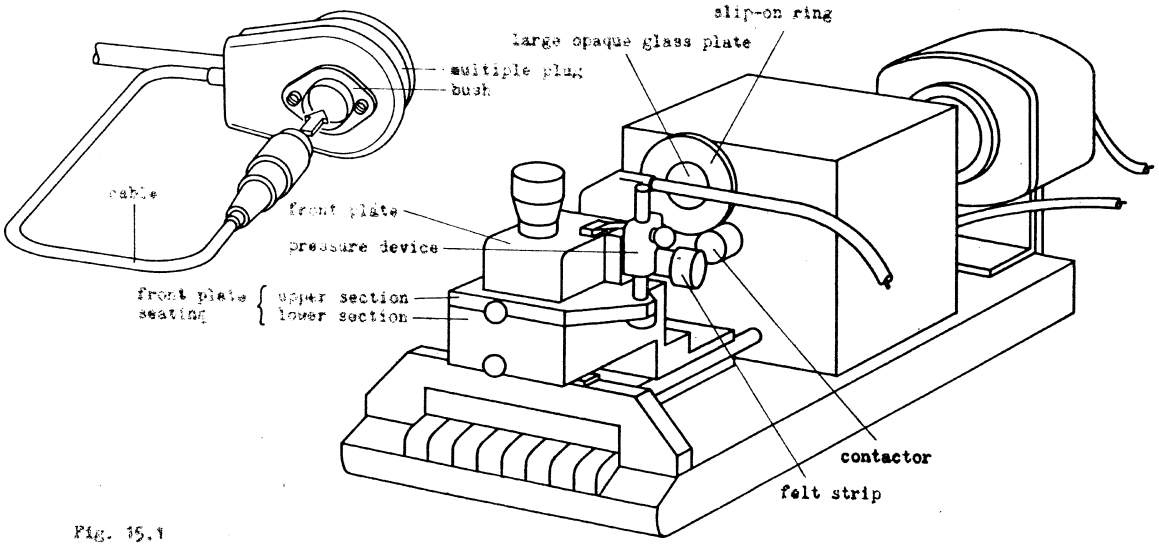

Fig. 15.1

Adjusting the Front Plate

Continuation of sheet 14

Fit lens hood on to built-in lens.
Fit slip-on ring on to the large opaque glass plate (see Fig. 15.1). Raise upper part of front plate seating by manipulating the button and tilt it towards the stop. Set the setting knob on the face of the indicator instrument to adjustment R1.
Set the third and the first green counter disc to 0 (zero); the middle disc to 9.
Turn the middle counter disc to the left and allow the spools to run against the stops.
View through the lens and, using a magnifier, check that diapragm opening corresponds to that of Fig. 16.1
An adjustment is possible by adjusting the two stops for the spool (see Fig. 17.1). Then apply graphite to the stops at the points of contact of the spools.

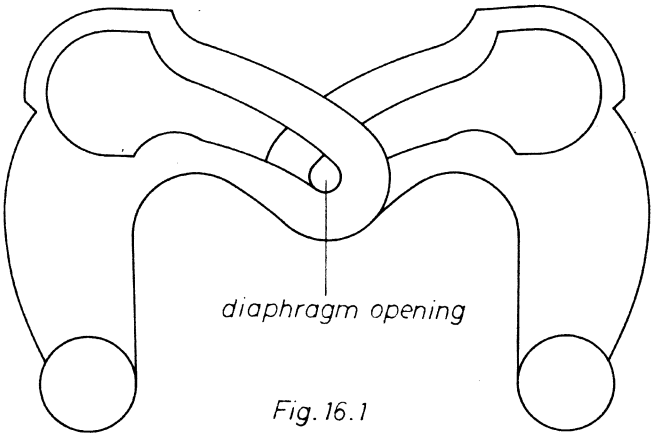

Fig. 16.1

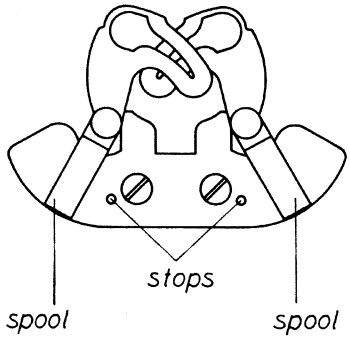

Fig. 17.1

Lift up lower section of front plate seating and tilt it towards upper section. Push front plate seating away from observer far enough for the lens hood to lie flush with the large opaque glass plate.

1. Testing the Resistance R4, R3

1.1 Depress key 2 on test light.
1.2 Set black adjustment knob situated at bottom left of the front plate of the indicator set to testing R4, R3.
1.3 Tap front plate seating, using wooden mallet, until indicator of indicator set rests at 0 (zero) ± 25 .
1.4 If incorrect reading is shown tilt lower section of front plate seating towards pressure keys.
1.5 Unsolder the two resistances R4 and R3 (see Fig. 18.1).
1.6 Tilt lower section of front plate seating towards the upper section.

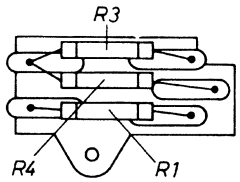

Fig. 18.1

2. Adjusting the Resistance R4, R3

Leave presskey 2 depressed.

2.1 Set adjustment knob to adjustment R4, R3.
2.2 Bring indicator to 0 ± 0.25 by tapping front plate seating, using wooden mallet and also by turning the blue number disc on the front plate of indicator set thus moving indicator to 0 ± 0.25. The numbers appearing on the number discs (e.g. 2.7) show the values for R4 in KΩ (see Part List of Spare Parts List, sheet 3).

Adjusting the Front Plate

Continuation of sheet 14 and 15

2.3 Depress key 6.
Using a wooden mallet tap repeatedly against front plate seating and by turning the black number discs bring the indicator to 0 ± 0.25. The numbers appearing (e.g. 36.0) show the values for R3 in KΩ (see part list of Spare Parts list, sheet 3).
2.4 Repeat procedure 2.2 and 2.3 several times.
2.5 Open up front plate seating. Solder both, resistance R4 and R3 on to soldering seam of front plate according to values ascertained. Close front plate seating.

3. Testing the Resistances R4, R3

3.1 See procedures 1.1 to 1.3.
3.2 If incorrect reading recurs repeat procedures 1.4 to 3.3 inclusive.

4. Testing the Resistance R1

4.1 Open front plate seating.
4.2 Set adjustment knob to adjustment R1.
4.3 Set first and third green number discs to 0 (zero). Set number disc in middle to 9.
Check, that the spools of the diaphragm measuring mechanism donot touch the stops (see Fig. 17.1)!
4.4 Turn central green number disc slowly to the left. Using a magnifier observe when the spools just touch the stops. The 0 (zero) on the number disc should subsequently show under the index.
4.5 If this is not the case R1 must be unsoldered and replaced by a brass wire of any thickness.

5. Adjusting the Resistance R1

5.1 Turn revolving knob to adjustment R1.
Set green number discs to around 18.0 KΩ.
5.2 Turn central number disc slowly to the left until spools of diaphragm measuring mechanism just touch the stops.
5.3 Unsolder brass wire which has been soldered in place of resistance R1.
5.4 Resolder resistance R1 according to the values shown on the green number discs (e.g. 12.0 KΩ).

6. Testing the Resistance R1

6.1 Set revolving knob to testing R1.
6.2 Press red button (engraving 1.2 V), situated on the left, next to the green number discs. The spools must move visible away from the stops to the extent of about 0. mm.

7. Push front plate seating towards pressure keys, lift off front plate.

8. Screw battery knob with miniature mercury cell into front plate.

Adjusting the Front Plate

Continuation of sheet 14, 15, 16 and 17

9. Introduce the tips of the brass forceps into the two centre holes - in the case of plugs with four soldering lugs into the two holes on the left (see Fig. 19.1).

The spools of the diaphragm measuring mechanism should run against the stops. The right spool may touch the stop sooner or later than the left spool (with diaphragm indicator).
If both spools move only little or not at all, the miniature mercury cell must be exchanged.

Mount front plate.
Check diaphragm indicator and viewfinder adjustment (see sheet 18).

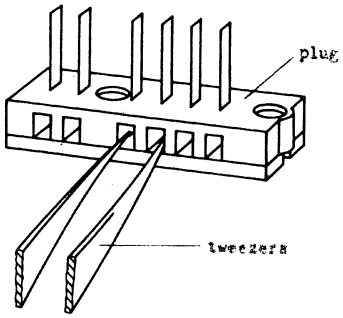

Fig. 19.1

Modifying the Leicina to Prüf 11

Sheet 18

Leicina up to serial No	2 400			execute Pos	1 - 11.
Leicina with serial No	2 401	to	5 000	execute Pos	2 - 11.
Leicina with serial No	5 001	to	6 000	execute Pos	3 - 11.
Leicina with serial No	6 001	to	6 450	execute Pos	4 - 11.
Leicina with serial No	6 451	to	8 800	execute Pos	5 - 11.
Leicina with serial No	8 801	to	12 814	execute Pos	6 - 11.
Leicina with serial No	12 815	to	14 301	execute Pos	7 - 11.
Leicina with serial No	14 302	to	14 700	execute Pos	8 - 11.
Leicina with serial No	14 701	to	15 400	execute Pos	9 - 11.
Leicina with serial No	15 401	to	16 090	execute Pos	10 - 11.
Leicina with Prüf No 10					

The following working operation must be carried out

Pos 1 Exchanging of the diaphragm shaft (see repair instructions, sheet 19).

Pos 2 Making the camera light tight (see repair instructions, sheet 52).

Pos 3 Scraping out the end of the film track (see repair instructions, sheet 20).

Pos 4 Exchanging the spool friction (see repair instructions, sheet 50).

Pos 5 Exchanging the pressure plate (see repair instructions, sheet 8).

Pos 6 Setting the 9 mm - attachment to infinity.
Displacing the rear lens of the 9 mm - attachment.

Pos 7 Checking the built-in lens and setting it, when needed, sheet 17 and 26).

Pos 8 Fixing the light shield in the spool cover (see repair instructions, sheet 51).

Pos 9 Fixing the cover for the claw slot (see repair instructions, sheet 55).

Pos 10 Fixing the film leader under the film track (see repair instructions, sheet 53).

Pos 11 Fixing the guide ledge (see repair instructions, sheet 54).

Exchange of the Shutter Spindle

Sheet 19

Tools

1. Spanner 08-27.40-66 W1
2. Screw driver 3.5 ø
3. Box spanner 5 mm

The following part is required:

1 shutter spindle 08-27.30-280 or
08-27.30- 69

Procedure

Unscrew the screw on the motor cover with spanner 08-27.40-66 W1, and remove motor cover.
Remove the spool cover.
Screw out two cheesehead screws with the screw driver 3.5 diam., screw out a hexagon screw with box spanner 5 mm (see Fig. 77.1). Remove the front panel.
Unscrew three screws and remove front bearing. Remove claw shield.
Unscrew two screws on the claw bearing and remove shield. Disengage the claw bearing from its pin fitting and take out the whole shutter spindle to the front. Screw back the bush of the rear shutter bearing (note the fixing screw) and lubricate. Insert the new shutter spindle from the front. Lubricate the front shutter bearing and screw in position. Adjust axle play with the bush of the bearing.
Loosely screw claw bearing in position and adjust claw; (see Repair Instructions, Sheet 30). Tighten and pin screws.
Lubricate bevel wheel worm, and guide bars.
Attach claw shield (see Repair Instructions, Sheet 55).
Screw rear shield in position and readjust switch (see Repair Instructions, Sheet 5). Screw the plate on to the front panel, adjust the aperture pointer and viewfinder (see Repair Instructions, Sheet 36).

Scraping the Film Channel and Replacing the Lateral Guide Spring

Sheets 20 and 21

Tools and accessories

1. Screw driver 2.8 ø
2. Screw driver 3.5 ø
3. Box spanner 5 mm
4. Key 08-27.40-66 W1
5. Triangular scraper
6. Contactor 10 - 120 g
7. Matt varnish

The following part is required

Guide spring 08-27.30-21

Scraping the film guide

Procedure

Remove the spool cover.
Unscrew the screw on the motor cover with key 08-27.40-66 W1 and remove the motor cover.
Remove the pressure plate (see Fig. 9.1). Unscrew the fixing screws of the film channel with the screw driver 2.8 diam., remove film channel, support, and guide spring.
Scrape the end of the film channel below the claw slot in the plate with the triangular scraper (see Fig. 20.1).

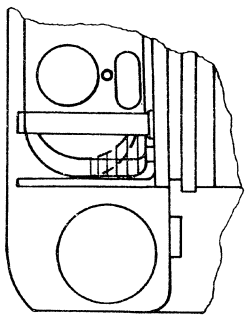

Fig.20.1

Paint the scraped area with matt varnish. Assemble the film channel with support and guide spring and adjust the film gate with the claw (see Repair Instructions, sheet 30.1) with the testing device. Check the loop adjustment (see Repair Instructions, sheet 26.1). Check the guide spring for lateral film pressure. Replace or bend if too weak.

Scraping the Film Channel and Replacing the Lateral Guide Spring

Continuation of sheet 20

Replacing or bending the guide spring

Remove film channel with support and guide spring. Replace guide spring or bend it by hand. Reassemble parts in reverse sequence. Check the guide spring with contactor 10 - 120 g. Note the position of the guide spring. Check lens and film gate adjustment.

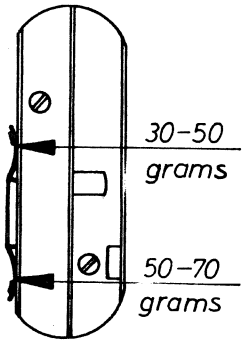

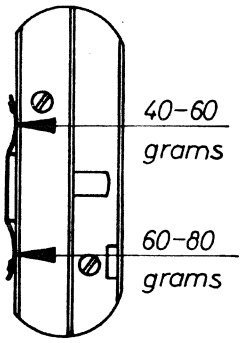

Testing the Friction

Sheet 22 and 23

Tools and Aids

1. Feeler gauge 10 - 120 grammes
2. Screwdriver 1.4 ⌀
3. Film spool
4. Twine, dia. ~ dia. 0.3, 300 mm long

Sequence of Operation

Remove the spool cover.
Place the Leicina together with the motor cover on to a non-slippery surface.
Swing out the hand-grip into position, operate the release trigger and check that the friction sleeve rotates.
Affix the twine to the film spool core and wind it round two to three turns.
Tie a loop in the loose end of the twine.
Slip the film spool on to the friction sleeve (see Fig. 27.1).

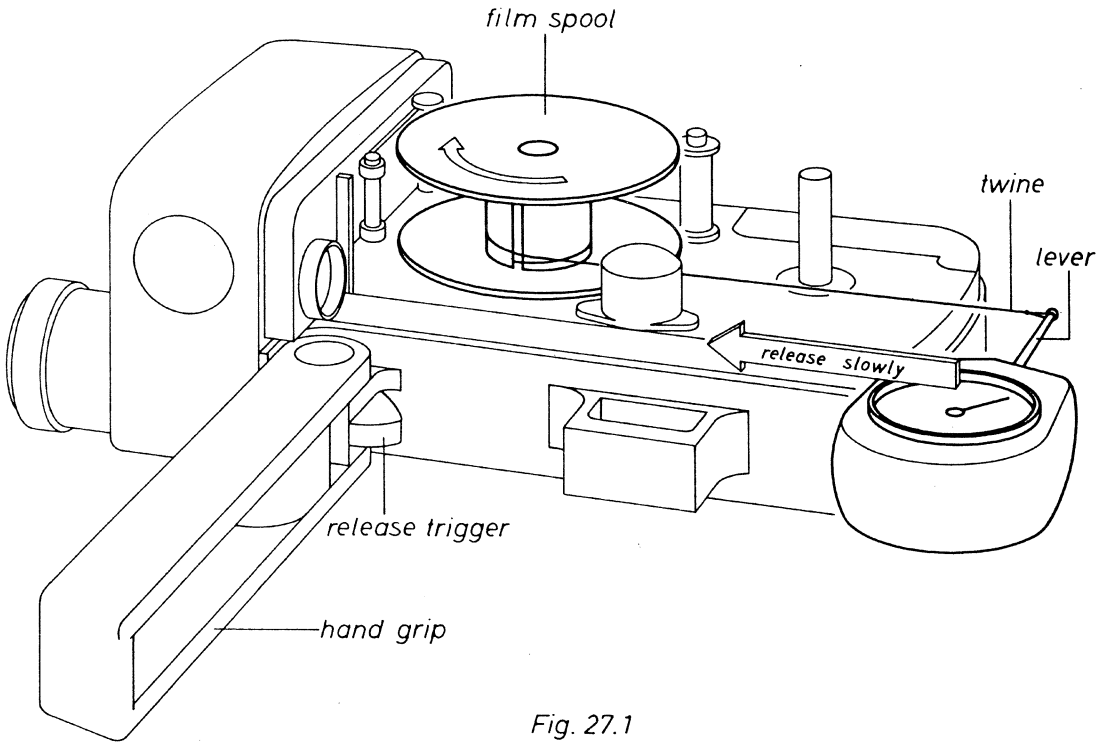

Fig. 27.1

Pass the lever of the feeler gauge through the loop of the twine and tension this slightly.

Testing the Friction

Continuation of sheet 22

Depress the release trigger and allow the feeler gauge to be drawn slowly towards the film spool. The friction reading should lie at 40 - 50 grammes. In the event of the tolerance limit not being reached, or if it is exceeded, the tension of the friction spring in the friction sleeve must be altered.

Detach the film spool from the friction sleeve.
Using screwdriver 1.4 ⌀ slacken two threaded pins in the nut of the friction sleeve by about three turns (see Spare Parts List, Sheet 6). In the case of the friction sleeve without threaded pins, exchange the former against the friction sleeve 08-30.302-030 (see sheet 50). Remove the nut, the friction sleeve and the friction spring. If friction is too high, press the friction spring together by hand; if friction is too low, use the spacing washer 08-27.30-35, if necessary the spacing sleeve 08-30.302-37.
Mount the friction sleeve.
Using the feeler gauge, check the friction again. If necessary, alter the tension of the friction spring, until the friction lies between the tolerance margin given.
Then slide on the spool cover.

Exchanging the Diaphragm Measuring Mechanism

of the Dygon f/2 15 mm Lens

Sheet 24 and 25

Tools and Aids

1. Screwdriver 2.8 ⌀
2. Screwdriver 3.5 ⌀
3. Screwdriver 4.5 ⌀
4. Screwdriver 5 ⌀
5. Spanner 5 mm
6. Spanner 08-27.40-66 W1
7. Soldering iron
8. Wax, grey V
9. Spacer 08-27.10-121

Sequence of Operation

Remove the spool cover.
Using spanner 08-27.40-66 W1, slacken the screw on the motor cover and remove the motor cover. Using spanner 5 mm, unscrew one hexagonal screw (see Fig. 77.1).
Using screwdriver 3.5 ⌀, unscrew two fillister head screws.
Remove the plate.
Using the soldering iron, unsolder the two cables (blue and red) of the diaphragm measuring mechanism at the socket and at the battery housing (see Fig. 28.1).

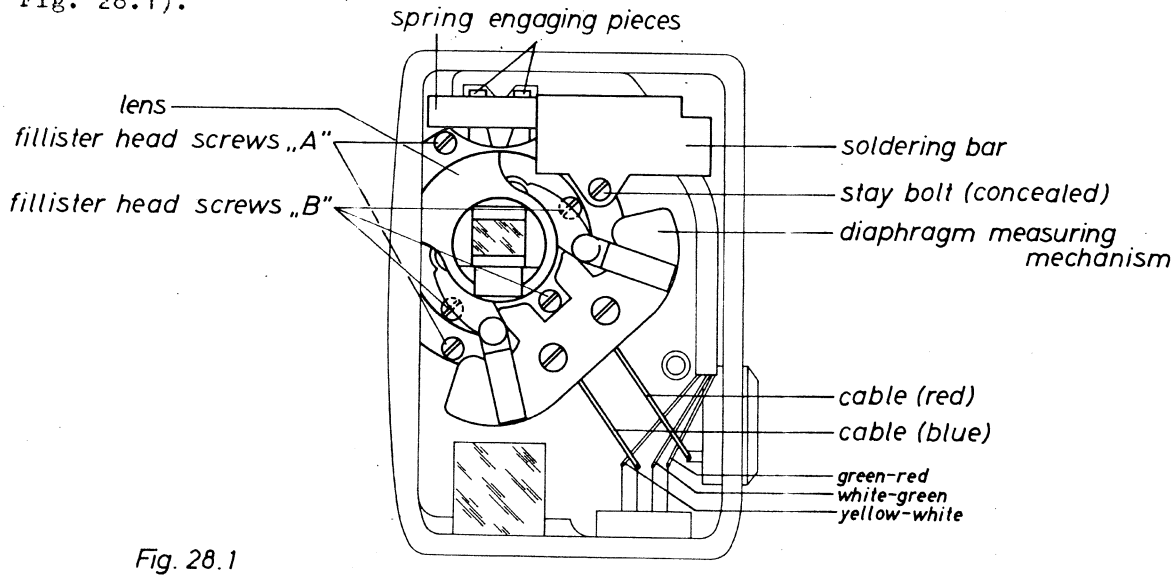

Fig. 28.1

Using screwdriver 2.8 ⌀, unscrew one screw from the soldering bar.
Withdrawing the soldering bar from the front plate, do not tuch the spools of the diaphragm measuring mechanism! Using screwdriver 4.5 ⌀, unscrew the stay bolt.
Using screwdriver 2.8 ⌀, unscrew the two fillister head screws A on the lens. Withdraw the lens with the measuring mechanism from the front plate. Using screwdriver 3.5 ⌀ unscrew three fillister head screws B from the lens and detach the diaphragm measuring mechanism.

Exchanging the Diaphragm Measuring Mechanism of the Dygon f/2 15 mm Lens

Continuation of sheet 24

Installing the Lens and the Diaphragm Measuring Mechanism

When a new diaphragm measuring mechanism is being used, the blades must be able to move freely in the lens. If necessary, one or move washers 08-27.10-121 can for alignment purposes be inserted (see Spare Parts List, sheet 3). Screw the measuring mechanism on to the lens. Insert the two engaging pieces with the spring into the guide slot of the lens and place the latter into the front plate, together with the measuring mechanism, and screw in place.
Screw the soldering bar on and solder on the two cables of the diaphragm measuring mechanism (see fig. 28.1).
Align the front plate (see sheet 14).
Align the viewfinder exit with the lens (see sheet 28.1).
Test the Dygon f/2 15 mm lens (see sheet 12).
The space present between the basic lens and the front plate forward surface must be filled out with wax, grey V.

Aligning the Dygon f/2 15 mm Lens

Sheet 26 and 27

Tools and Aids

1. Adjusting spanner	08-27.10 Z1 W17
2. Screwdriver 2.8 ø	
3. Washer for film canal (0.03 mm thick)	08-27.30-202
4. Washer (0.05 mm thick)	15-12.02-22/1
Washer (0.1 mm thick)	15-12.02-22/2
Washer (0.2 mm thick)	15-12.02-22/3
Washer (0.3 mm thick)	15-12.02-22/5
5. Emery paper, grain 180	
6. Steel plate to which emery paper is glued	
7. Protective lacquer	

Sequence of Operation

1. If the test tolerance was exceeded to ± 0.02 mm, the front lens mount of the lens from the Leicina Serial No. 24 000 can be correspondingly adjusted using adjusting spanner 08-27.10 Z1 W17.

   Depress the head (button) for the lens engagement, slip the assembly spanner on to the front lens mount and adjust this according to the tolerance deviation. Of the deviation lies on the minus side, it is advantageous to carry out adjustment to just below 0.015. Then seal the front lens mount with protective lacquer (see Fig. 29.1).

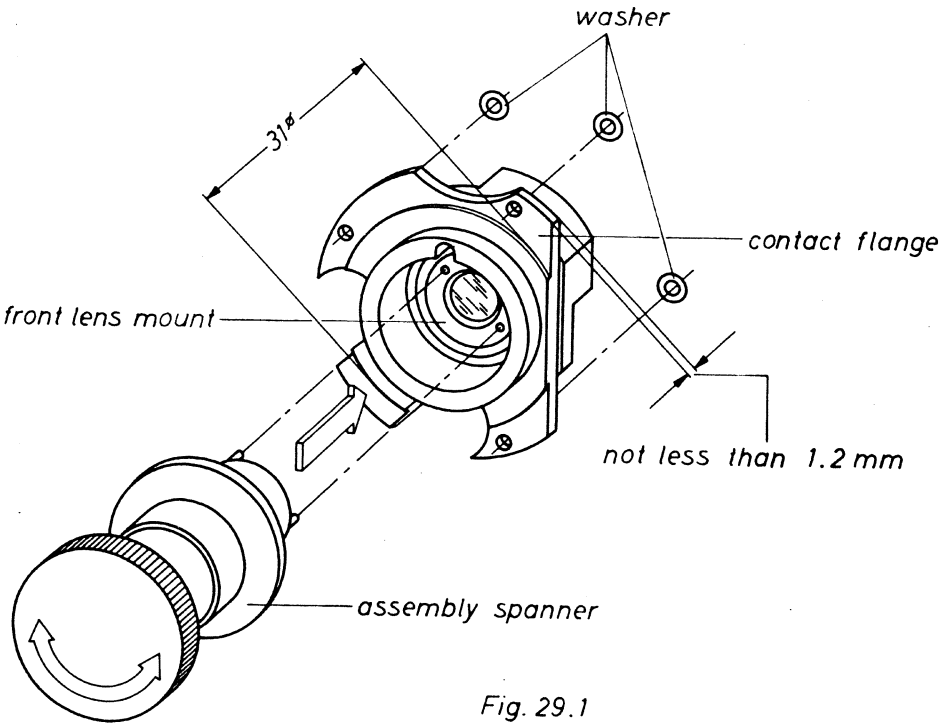

Fig. 29.1

Aligning the Dygon f/2 15 mm Lens

Continuation of sheet 26

If the test tolerance was exceeded by more than ± 0.02 mm alignment takes place on the film canal.
Detach the film plate (see sheet 8).
Using screwdriver 2.8 ∅ unscrew the screws on the film canal and remove the film canal.
In the case of the tolerance being exceeded up to plus 0.05 mm the contact surface of the film canal must be shaved down carefully by at least 0.03 mm, using a steel plate covered with emery paper 180.
Up to 0.05 minus, the metal-pad 08-27.30-202 is placed between film canal and plate *.
Then screw on the film canal (see sheet 30.1, procedures 2.2 to 2.5).
Assemble the pressure plate (see sheet 8).

2. If the test tolerance was exceeded by more than ± 0.03 mm, alignment is carried out on the contact flange of the lens.
   Dismantle the lens (see sheet 24).
   If tolerance is exceeded on the minus side, the lens is mounted on a lathe and turned down to a diameter of 31, according to a dial gauge corresponding to the deviation*. Care must be taken that the contact flange lies against the chuck arrangement of the lathe and does not possess a thickness of less than 1.2 mm after turning (see Fig. 29.1)!

   If tolerance is exceeded in a plus direction, three washers of identical thickness 15-12.02-22 (0.05; 0.1; 0.2; 0.3) are placed between the contact flange of the lens and the front plate, according to the deviation.

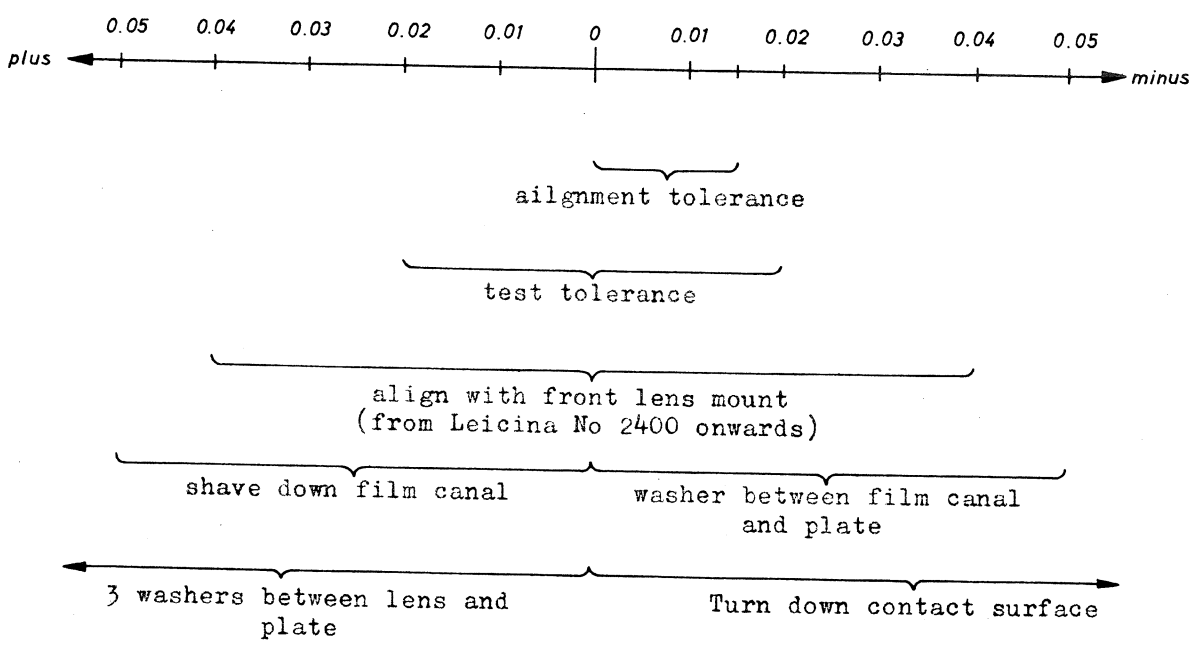

Install the lens (see sheet 24).

* It is advatageous to carry out adjustment to just below 0.015.

Alignment of Viewfinder exit on Dygon f/2 15 Lens

Sheet 28 and 39

Tools

1. Alignment device (consisting of alignment plate and telescope) 08-27.10 Z1 W14
2. Spanner 5 mm
3. Screwdriver 2.8 Ø
4. Screwdriver 3.5 Ø
5. Screwdriver 4.5 Ø
6. Spanner 08-27.40-66 W1

Sequence of Operation

Using spanner 08-27.40-66 W1 slacken screw of motor cover and lift off motor cover.
Lift off spool cover.
Using spanner 5 mm unscrew one hexagonal screw (see Fig. 77.1). Unscrew two fillister head screws with the aid of screwdriver 3.5 Ø.
Remove plate.
Place alignment plate on to reverse side of front plate (see Fig. 30.1).

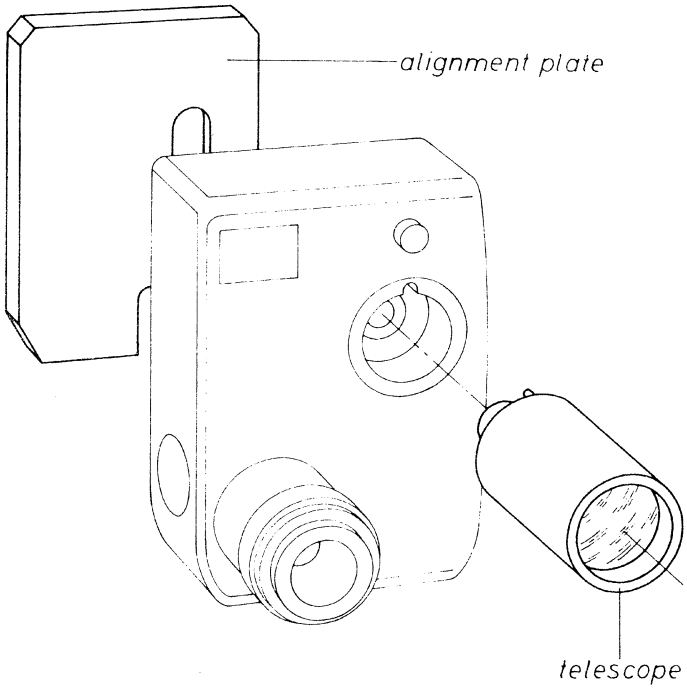

Fig. 30.1

Alignment of Viewfinder Exit on Dygon f/2 15 Lens

Continuation of sheet 28

Engage telescope in the lens.
View through telescope and ascertain that the axis of the alignment tongue corresponds to the upright line of the cross hairs (see Fig. 31.1).

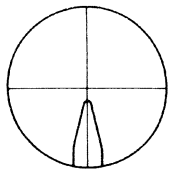

Fig. 31.1

If this is not the case, lens must be aligned. Detach telescope and alignment plate. Using screwdriver 2.8 ⌀ unscrew one screw on the soldering bar, withdraw soldering bar slightly from front plate (do not tuch the spools of the diaphragm measuring mechanism!) so that the stay bolt situated underneath can be slackened by about 1/4-turn with the aid of screwdriver 4.5 ⌀ (see Fig. 28.1). Using screwdriver 2.8 ⌀ loosen two fillister head screws (A) on the lens by about 1/4-turn (see Fig. 28.1).
Adjust the position of the lens accordingly (see Fig. 31.1).

Then tighten fillister head screws and stay bolt. Screw on soldering bar.

Screw plate to front plate; adjust aperture indicator and viewfinder (see sheet 18).

Adjusting the Claw

Sheets 30, 31, 32 and 33

Tools and Gauges

1. Screwdriver 2.8 ⌀
2. Screwdriver 3.5 ⌀
3. Spanner 5 mm
4. Test equipment with two stop measures — 08-27.30 Z1 A11
5. Test equipment — 08-27.30 Z1 A12
6. Bending spanner — 08-27.30 Z1 W17
7. Gauge — 08-27.30 Z250 A2
8. Spanner — 08-27.40-66 W1
9. Araldite 103* oder Agomet U3

Sequence of Operation

1. Using spanner 08-27.40-66 W1 slacken the screw on the motor cover and detach the motor cover.
   Take off the spool cover.

   Using screwdriver 3.5 ⌀ unscrew one cylindrical head screw securing the cover foil 08-27.30-171 and detach the cover foil (see Spare Parts List, Sheet 5).

2. Testing the Distance between Lower Edge of Film Gate and Lower Edge of Claw

2.1 In the case of cameras without Prüf to Prüf 14 set the dial of the dial gauge for the test equipment 08-27.30 Z1 A11 according to the stop measure (12.00) at zero (0) (see Fig. 32.1).
Then remove the stop measure.

2.2 Detach the pressure plate (see Fig. 9.1).
Turn the intermediate wheel situated between the motor pinion gear and the worm of the diaphragm axle by hand until the claw protrudes from the right side of the claw opening (see Fig. 33.1).

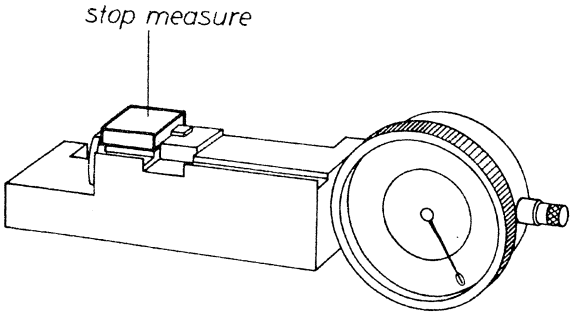

Fig. 32.1

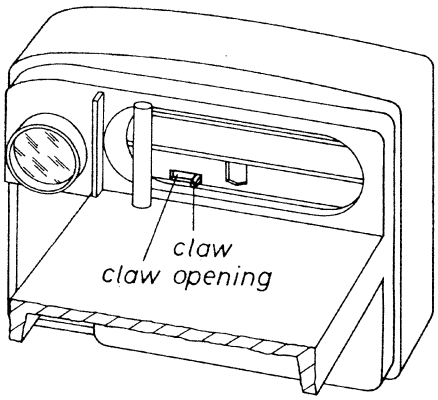

Fig. 33.1

Adjusting the Claw

Continuation of sheet 30

2.3 Place the test equipment on the plate; the fixed stop of the test equipment fits closely to the left edge of the film gate (see Fig. 34.1).

Turn the intermediate wheel counter-clockwise until the claw presses against the movable stop (see Fig. 34.1) which may be ascertained by the needle of the gauge.
Turn the intermediate wheel further until the dial gauge needle stops at 0 ± 0.05 mm after about one revolution.

2.4 If the tolerance limit is not reached or is exceeded loosen the securing screws of the film canal by a quarter-turn, using screwdriver 2.8 ⌀, and displace the film canal to the right or the left; then tighten the screws again.

2.5 Turn the intermediate wheel a half-turn in clockwise direction, place the test equipment on to the plate and check the dial gauge indicator reading. If necessary, re-adjust the film canal.

2.6 In the case of cameras from Prüf 15 set the dial of the dial gauge for the test equipment 08-27.30 Z1 A11 according to the long stop measure (12.08), to 0 (zero).

2.7 See procedure 2.2 to 2.5.

3. Testing the Claw-stroke

3.1 Place the test equipment 08-27.30 Z1 A12 on to the stop measure, setting the dial of the dial gauge to 0 (see Fig. 35.1).

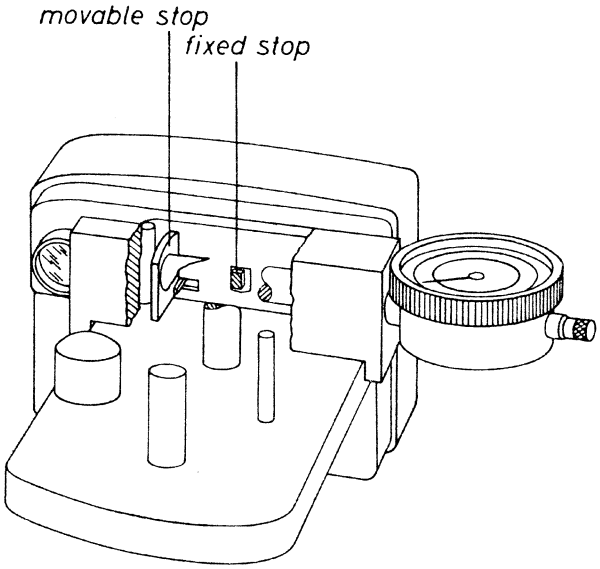

Fig. 34.1

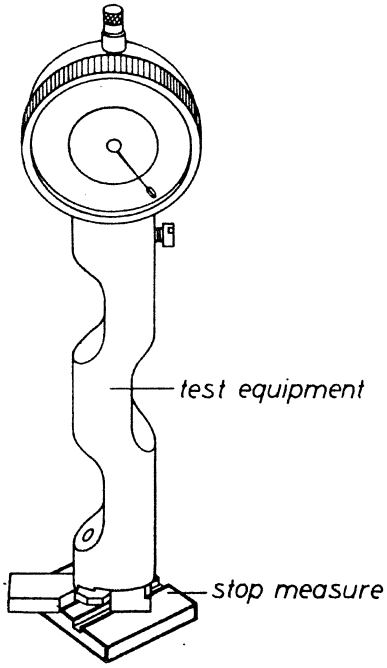

Fig. 35.1

Adjusting the Claw

Continuated for sheet 30 and 31

3.2 Turn the intermediate wheel counter-clockwise until the claw disappears in the claw opening. Place the test equipment on to the plate as shown in Fig. 36.1 and press against the film canal so that the point of the claw presses against the right-angled feeler face of the test equipment. Turn the intermediate wheel counter-clockwise until the claw protrudes at least 0.6 mm but not more than 0.8 mm from the claw opening. Turn the intermediate wheel clockwise until the claw retreats at least 0.5 mm but at the most 0.7 mm.

3.3 If the tolerance limit is exceeded or not reached remove the test equipment. Using spanner 5 mm screw out one hexagonal screw (see Fig. 77.1). Using screwdriver 3.5 ø screw out two cylindrical head screws.
Take off the front plate.

Remove the cover foil (see Fig. 78.1), if available, carefully.

3.4 Using the bending spanner 08-27.30 Z1 W17 adjust the claw as required (see Fig. 37.1).

3.5 See procedure 3.2 and 3.4.

3.6 Turn the intermediate wheel in such a way, that the claw emerges from the right claw opening. Insert the gauge 08-27.30 Z250 A2 under the claw; it should be possible to push it at least beyond the second, but not beyond the fourth graduation mark, underneath the claw (see Fig. 38.1).

3.7 If this is not the case, unscrew two cylindrical head screws serving to secure covering, with the aid of screwdriver 3.5 ø, and remove the covering (see Fig. 39.1). Screw in the two cylindrical head screws again.

3.8 If the claw passes beyond the fourth graduated mark, it must be re-bent (see Fig. 37.1). Then check the positioning of the claw (see procedure 3.2 to 3.6).

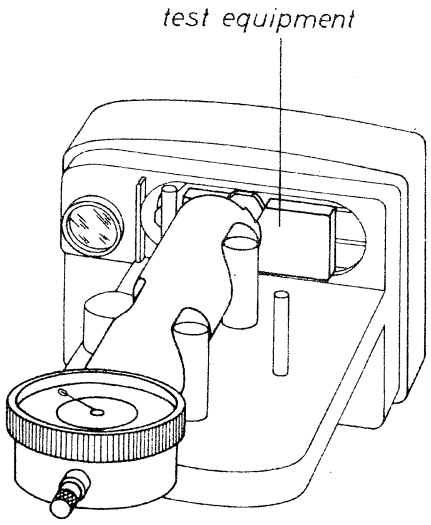

Fig. 36.1

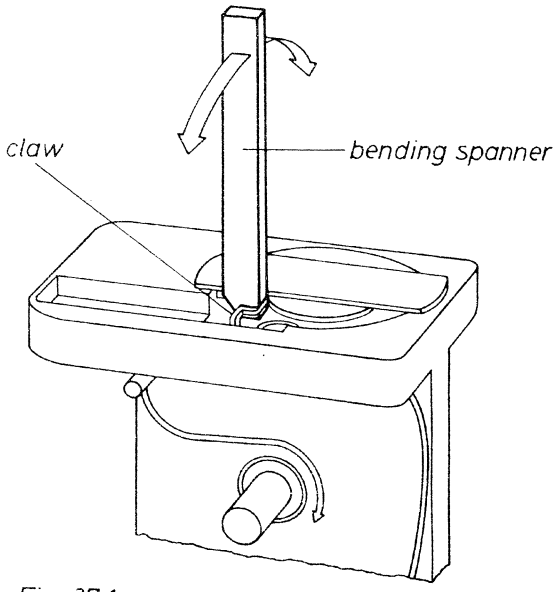

Fig. 37.1

Adjusting the Claw

Continuation of sheet 30, 31 und 32

3.9 If the claw does not pass beyond the second graduated mark it must be re-bent (see Fig. 37.1). Then check the positioning of the claw (see procedure 3.2 to 3.6).

3.10 Turn the intermediate wheel until the claw moves to the left but does not yet enter the claw opening!
Insert the gauge 08-27.30 Z250 A2 underneath the claw. The claw may only touch the gauge up to the second graduated mark.
The discrepancy between the left and right position of the claw must be at least 1/2 graduated mark!

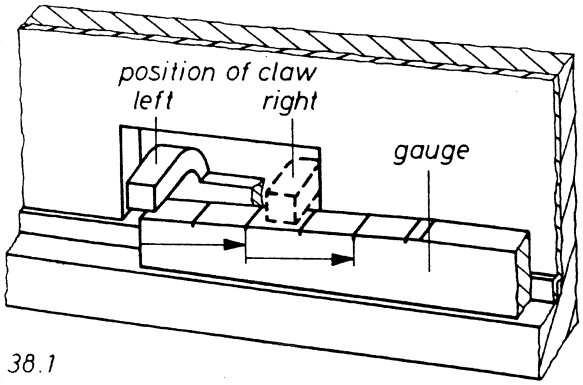

Fig. 38.1

3.11 If this is not the case see procedure 3.7. If the claw passes beyond the second graduated mark, raise the end of the pin for the claw guide slightly, using screwdriver 3.5Ø (see Fig. 39.1).
Then check the positioning of the claw (see Fig. 38.1).

3.12 Using screwdriver 3.1 Ø unscrew the two cylindrical head screws and secure the covering (see Fig. 39.1).
If the cover foil was detached, stick it on again with Araldite 103* (see Fig. 78.1). Secure the cover foil 08-27.30-171 (see Spare Parts List, sheet 5).
Align the viewfinder unit with the Dygon lens (see sheet 28).

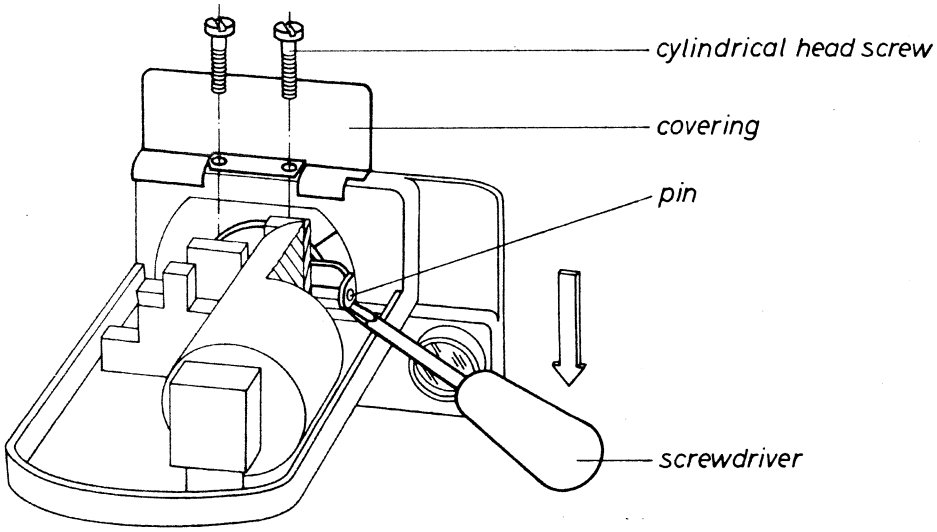

Fig. 39.1

* See Instructions for using Adhesives, Spare Parts List for Leica M2.

Exchange of the Motor

Sheets 34 and 35

Tools

1. Assembly jig 08-27.30-116 W1
2. Key 08-27.40- 66 W1
3. Screw driver 3.5 ø
4. Soldering iron

The following parts are required:

1. Motor 302-050.031-1 (ø of the motor pinion 4.5 mm) or
   302-050.031-2 (ø of the motor pinion 4.8 mm)
2. Cover plate 08-27.30-262

Procedure

1. Unscrew the motor cover fixing screw with key 08-27.40-66 W1; remove cover.
   Remove spool cover. Take out the battery or accumulator.
   Remove the film pressure plate. Unscrew the screw holding the locking lever on the plate with screw driver 3.5 ø. Pull the locking lever with torsion spring off the shaft.
   Pull the cover foil off the plate. Unscrew the screw holding the motor cover plate with screw driver 3.5 ø, remove cover plate. Unscrew two screws attaching the motor bearing to the plate with the screw driver 3.5 ø. Carefully remove the motor with bearing from the plate. Unsolder the four motor cables from the sliding switch with the soldering iron. Unscrew the motor bearing from the motor.
2. Screw the motor bearing to the new motor with the four screws, which should not be tighten. Insert the motor in the assembly jig 08-27.30-116 W1 (see Fig. 2.1).

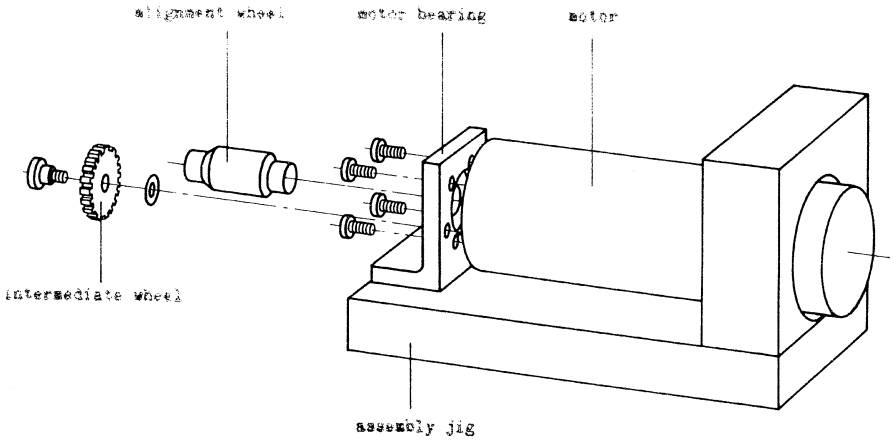

Fig. 2.1

Exchange of the Motor

Continuation of sheet 34

Push the alignment collar which is part of the assembly jig over the motor gear into the motor bearing with the suitable adapter. Before tightening the four screws of the motor bearing, make sure the red motor cable lies below the red, the yellow cable below the yellow slot. Remove the alignment collar from the motor gear. The intermediate wheel and the washer are now screwed onto the motor bearing.

3. Remove the motor from the assembly jig, solder the cables to the end of the motor (see Spare Parts List, Sheet 7). Place the motor onto the plate and attach the motor bearing.
   Seal the plate with the cover foil (see Sheet 10). Mount the film pressure plate (see Sheet 8).
   Replace the locking lever.
   Check motor speed (see Sheet 11).

Stop Indicator and Viewfinder Adjustment

Sheets 36 to 40

Tools, Testers and Accessories

1. Screw driver 1.4 ⌀
2. Screw driver 2.2 ⌀
3. Screw driver 3.5 ⌀
4. Spanner 5 mm
5. Spo indicator and viewfinder adjusting ring 08-27.00 Z1 W17
6. Test insert 08-27.00 Z1 A28
7. Slip-on collimator 08-27.10 Z1 W14
   (part of the alignment device of the viewfinder beam splitter)
8. Key 08-27.30 Z1 W16
9. Key 08-27.40-66 W 1
10. Auto-collimation telescope with Leica centring insert 42-582.01 Z1 W4
11. Magnifier
12. Brass forceps
13. Sable brush, Size 6
14. Sealing lacquer
15. Thinner 13 652
16. Wax, grey V (dark)
17. Wax, grey VII (Light)

Procedure

1. Compare the voltage reading of the stop indicator - and viewfinder adjusting rig with the mains voltage. Connect the instrument. Press the button on the transformer. Push the lamp cable plug into the blue socket and sockets 3, 5 and 6 on the transformer - according to the desired groundglass screen brightness. Optimum groundglass screen illumination can be obtained by the release and radial displacement of the knurled ring at the end of the lamp mount, and after undoing the knurled chromium screw and axial displacement of the lamp mount.

2. Loosen the screw for securing the motor cover with tool 08-27.40-66 W1 and remove cover.
   Take off spool cover and film pressure plate (take care of the distance washers underneath the C-clip).
   Unscrew the film guide fixing screw (see Fig. 20.1) with screw driver 2.2 ⌀. By rotating the intermediate wheel with screw driver 2.2 ⌀ the claw disappears in the claw opening, and the rotating stop exposes the picture gate (the intermediate wheel is mounted between the motor gear and the diaphragm shaft).
   Remove a screw from the underside of the front plate with screw driver 3.5 ⌀, remove the round metal cover (see Fig. 20.1).

3. Rotate the deflecting prism of the stop indicator - and viewfinder adjustment rig as shown in Fig. 21.1. Engage the clip-on collimator 08-27.10 Z1 W14 in the front plate in place of the accessory lens.

Stop Indicator and Viewfinder Adjustment

Continuation of sheet 36

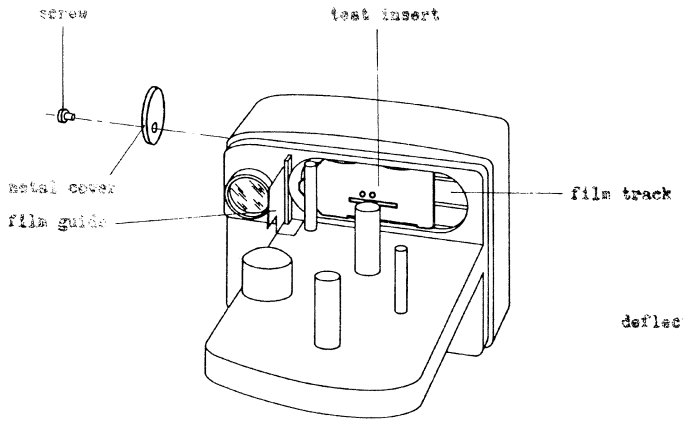

Fig. 20.1

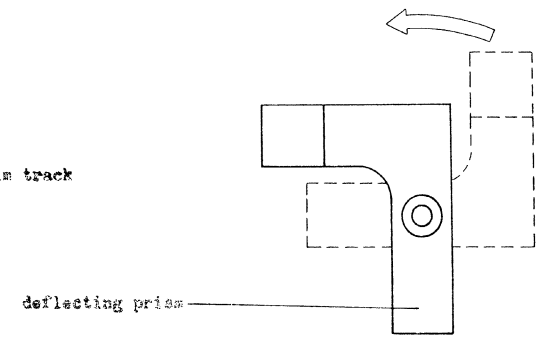

Fig. 21.1

Push the camera in its holder into the mounting device from above, so that the slip-on collimator is opposite the entry tube of the adjustment rig. Press the front plate against the stop bar on the right. Secure the camera by turning the two knurled nuts. Turn the deflecting prism to the right as far as possible (see Fig 22.1).

4. Alignment of the optical axis

By pushing the two clamping levers towards the centre of the groundglass screen holder adjust this until the crosslines on the groundglass screen coincide with the bold crosslines of the slip-on collimator. Remove the latter from the front plate. Rotate the deflecting prism to the left trough 90 °.

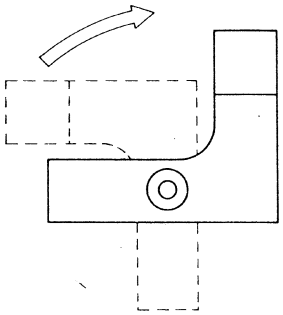

Fig. 22.1

5. Alignment of the picture gate with the optical axis

Push the test insert 08-27.00 Z1 A28 on to the film track as shown in Fig. 20.1. Rotate the deflecting prism to the right as far as possible.

5.1 Check the centration of the groundglass screen crosslines in the central illuminated circular area. If necessary, unscrew the hexagon nut fixing the plate to the front plate through about two turns with spanner 5 mm (see Fig. 77.1).

5.2 Adjust the plate until the groundglass screen crosslines lie in the centre of the circle. Slightly tighten the two cylindrical head screws on the plate.
By pushing the two clamping levers towards the centre of the groundglass screen holder, this can be rotated until the four horizontal lines of the groundglass screen are in the centre of the left and right circle (see Fig. 23.1).

Stop Indicator and Viewfinder Adjustment

Continuation of sheet 36 and 37

Ensure correct position of the cross!

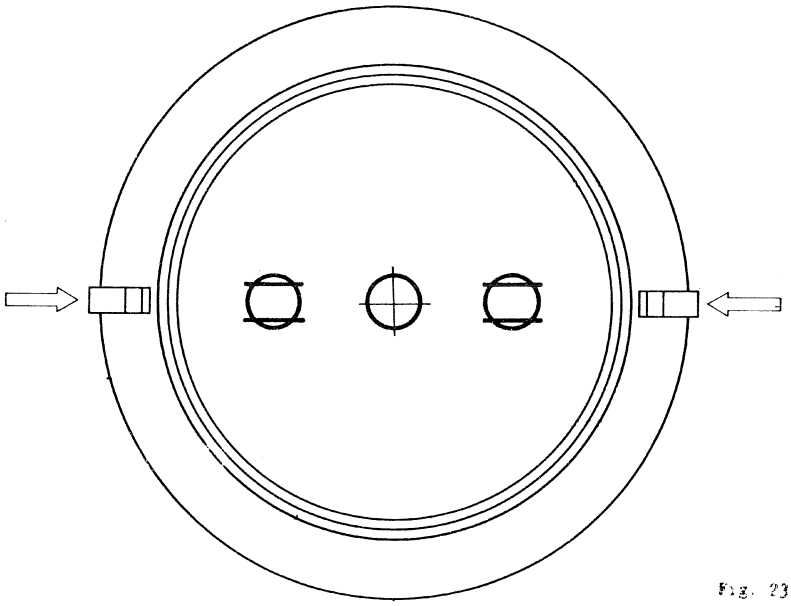

Fig. 23.1

5.3 Rotate the deflecting prism to the left through 90° (see Fig. 22.1). Unscrew the plate from the front plate.

6. Look throug the built-in lens and check with a magnifier whether the diaphragm aperture corresponds with Fig. 16.1. A correction is possible by changing the two stop positions for the spools (see Fig. 17.1).

7. Stop indicator adjustment

7.1 Rotate the deflecting prism to the left as far as possible. The projected stop indicator appears in the left top of the groundglass screen and must be in the position shown in Fig. 24.1.

7.2 Failing this, the stop indicator must be carefully brought into the correct position with brass forceps.

7.3 Insert the tips of forceps in the two centres with sockets with four soldering lugs in the two left-hand holes (see Fig. 19.1). The stop indicator moves to the right (see Fig. 24.1).

7.4 See procedure 7.2.

7.5 Pull forceps from the socket holes. Compare the position of the stop indicator with Fig. 24.1.

7.6 Repeat procedure 7.2 to 7.5 several times. Clean the viewfinder beam splitter with a sable brush.

8. Rotate the deflecting prism to the right through 90° (see Fig. 21.1). Place the plate against the front plate, screw in, but do not tighten, two cylindrical head screws and one hexagon nut. Rotate the deflecting prism to the right as far as possible.

Stop Indicator and Viewfinder Adjustment

Continuation of sheet 36 to 38

8.1 Align the plate with the groundglass screen (see Fig. 23.1).
Tighten the three fixing screws on the plate.

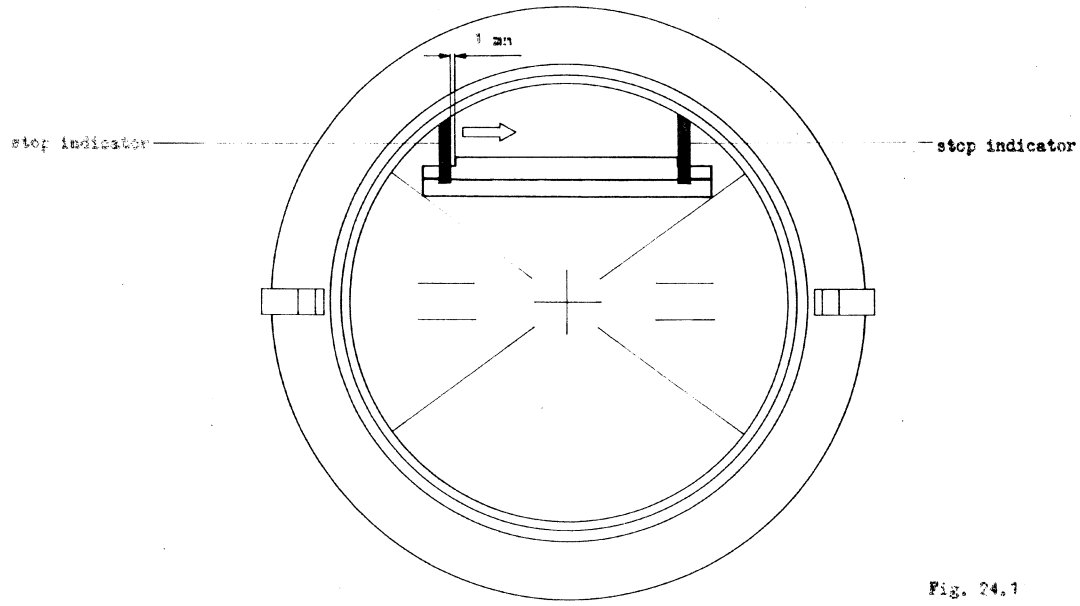

Fig. 24.1

9. Viewfinder adjustment

9.1 Remove the test insert from the film track.
Push the spool cover on the plate and lock.
Frontally illuminate the groundglass screen of the tester with a lamp.

9.2 Focus the double circle in the eyepiece of the spool cover; ensure that the reflected groundglass screen crosslines are centred in the double circle (see Fig. 26.1).
Corrections are possible by unscrewing the counter screw and adjusting the three grub screws on the underside of the front plate (see Fig. 26.1).

9.3 After the mirror adjustment in the front plate the crosslines have become unsharp, hence, the mount with lens must be adjusted (see Fig. 25.1).

9.4 Focus the crosslines through the eyepiece of the autocollimation telescope 42-582.01 Z1 W4. Place the telescope on the camera eyepiece with the Leica centring insert. It is recommended to look through the telescope from a distance of 30 mm.
Turn the knurled ring on the camera eyepiece until the index ring appears sharp; the crosslines are still unsharp.

9.5 Pull the spool cover off the front plate. Dissolve the sealing lacquer with thinner 13 652 where the mount with lens (see Fig. 25.1) is screwed into the plate.
Turn the mount to the left through a quarter turn with key 08-27.30 Z1 W16 (with the Leicina 8 V 08-28.30 U13 W1).

Stop Indicator and Viewfinder Adjustment

Continuation of sheet 36 to 39

Push on the spool cover. Ensure through the Autocollimation telescope that the crosslines are in sharp focus.
If necessary turn the mount further to the right or left.

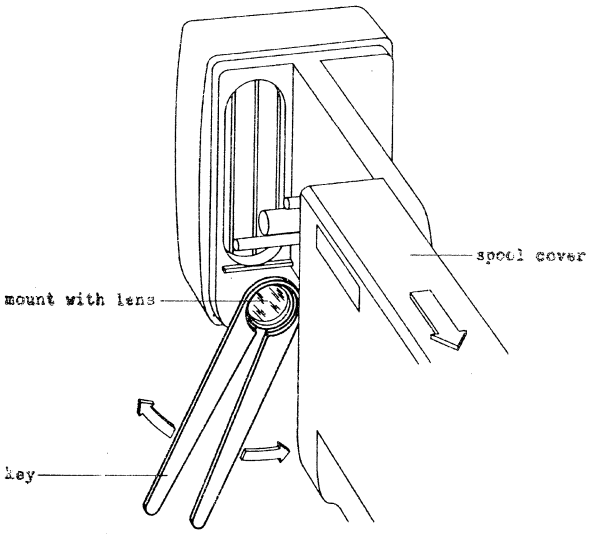

Fig. 25.1

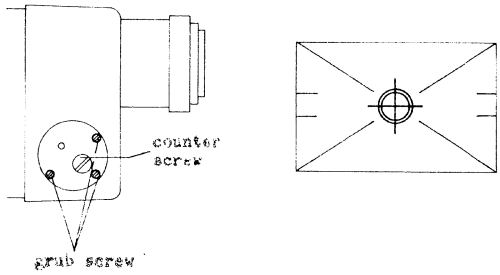

Fig. 26.1

9.6 The groundglass screen crosslines are now off-centre in the circle; the mirror must therefore be again adjusted (see Fig. 26.1).
Check the sharpness of the crosslines. Secure the mount with lens against rotation with sealing lacquer.

9.7 Focus the double circle through the camera eyepiece. The four diagonal lines of the groundglass screen must be in the corners of the viewfinder image.

9.8 If necessary erect the viewfinder with screw driver 1.4 ⌀ by adjusting two screws (covered with wax) on the right side of the spool cover.
Fill the holes with wax, grey V (light).

Switch off tester.
Remove the Leicina from the tester.
Screw the round cover plate to the underside of the front plate. Cover the screw, and, if necessary, the gap around the cover plate with wax, grey VII (dark).
Mount the pressure plate (see sheet 8).

Elimination of Film Transport Failures

Sheet 50

Tools

1. Wrench 08-27.40-66 W1
2. Screw driver 3.5 mm dia.
3. Drift punch
4. Center punch

Condition of Camera

Clicking noise inside camera with running motor. Although film was loaded according to instructions, it was not properly wound by take-up spool. Motor finally stops.

Cause

The spring tension of the friction sleeve is too weak.

Elimination of the Defect

Remove spool cover. Loosen screw of motor cover with wrench 08-27.40-66 W1. Take off motor cover.
Removal of cover 08-27.30-171, refer to sheet 1.1.
Following figure 70.1 place the Leicina with its bushing on a support base and separate the friction sleeve carefully from the film winding pinion by means of a drift punch.
Remove the tapped-out friction sleeve and replace by friction sleeve 08-30.302-030.
Place the Leicina together with the new friction sleeve 08-30.302-030 on a stand. Assemble the film winding pinion 08-27.30-270 (see fig. 71.1) and stake it with a center punch. If friction sleeve 08-30.302-030 is employed together with the plate 08-27.30-6 insert intermediate disc 08-27.30-291. Check friction (see sheet 22).

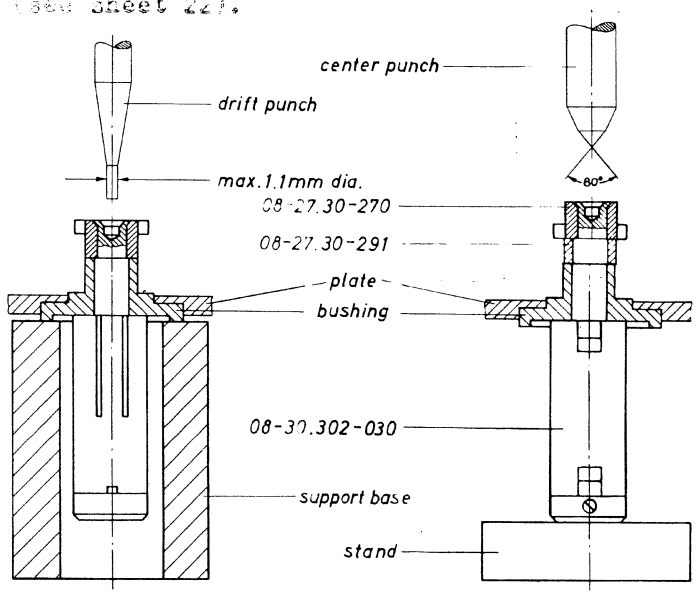

Fig. 70.1 Fig. 71.1

Assemble cover plate (see sheet 1.1), assemble motor and spool cover. Check power-intake (sheet 7) and general functioning of the camera in all parts.

Eliminating Entrance of Stray Light

Sheet [illegible] and [illegible]

Tools and Sundry Requirements

1. Spanner 08-27.40-66 N1
2. Dull lacquer, black 53 160
3. Araldit 103*
4. Angle gauge 08-27.20-23
5. Adhesive EC 880*
6. Tesafix 964, 4 mm wide

Sequence

1. Spool cover

   Detach spool cover. Using spanner 08-27.40-66 N1 remove screw of motor cover.

   The angle gauge 08-27.20-23 must be glued to the spool cover with Araldit 103 in such a way, that the raised foremost edge of the angle gauge sits flush against the shoulder of the spool cover. Fill out the corner between angle gauge and spool cover carefully with Araldit. When the Araldit adhesive has completely hardened, blacken the angle gauge with dull lacquer. Especial care must be taken, that any chink of light between angle gauge and spool cover is also sealed off.

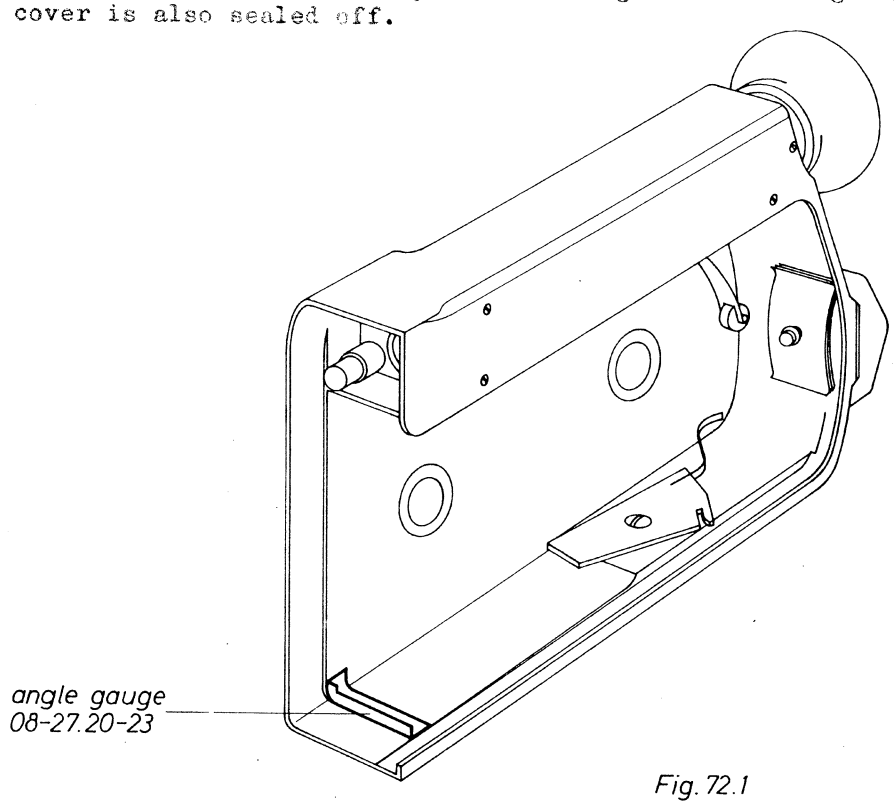

Fig. 72.1

*See instructions for using adhesives, Spare Parts List for the Leica M2.

Eliminating Entrance of Stray Light

Continuation of sheet 51

2. Plate

Push the spool cover on to the plate as far as the plush insulation. If a chink remains between spool cover and plush, proceed as follows:

Remove plush strip from the spool cover side of the plate. Stick as much Tesafix 4 mm wide under the plush insulation as is required to eliminate any chink. Stick on plush insulation with adhesive EC 880.

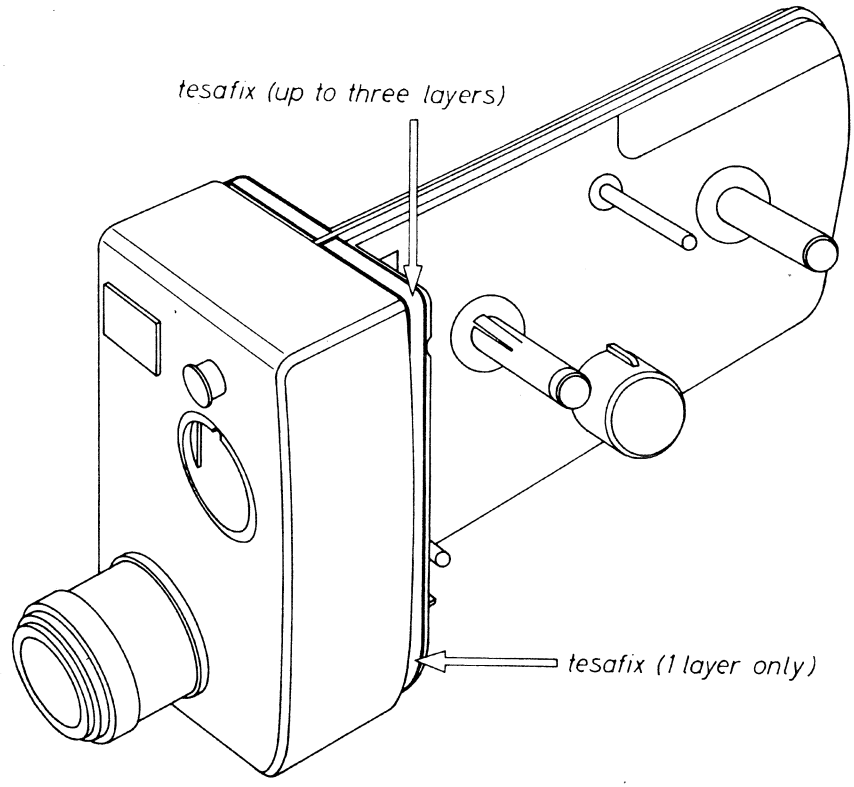

Fig. 73.1

Replace motor and spool covers.

Check that camera functions correctly.

Installation of the Film Guide Plate

Sheet 53

Tools

1. Jig 08-27.30-7 W55
2. Drill 1.4 ⌀
3. Screw-tap M 1.7
4. Screw driver 2.2 ⌀

The following parts are required:

1. Guide plate 08-27.30-197
2. Screw M 1.7 x 2.5 LN 120 19

Sequence

Remove spool cover
Press tissue paper behind the pressure plate to seal off against borings.

Set up jig 08-27.30-7 W55 (see fig. 74.1). Drill to a depth of 5 mm with drill 1.4 ⌀. Remove jig and countersink borehole well. Cut thread with screw-tap M 1.7.
Carefully remove borings.
Mount guide plate 08-27.30-197 and secure screw M 1.7 x 2.5 LN 120 19 with screw driver 2.2 ⌀.

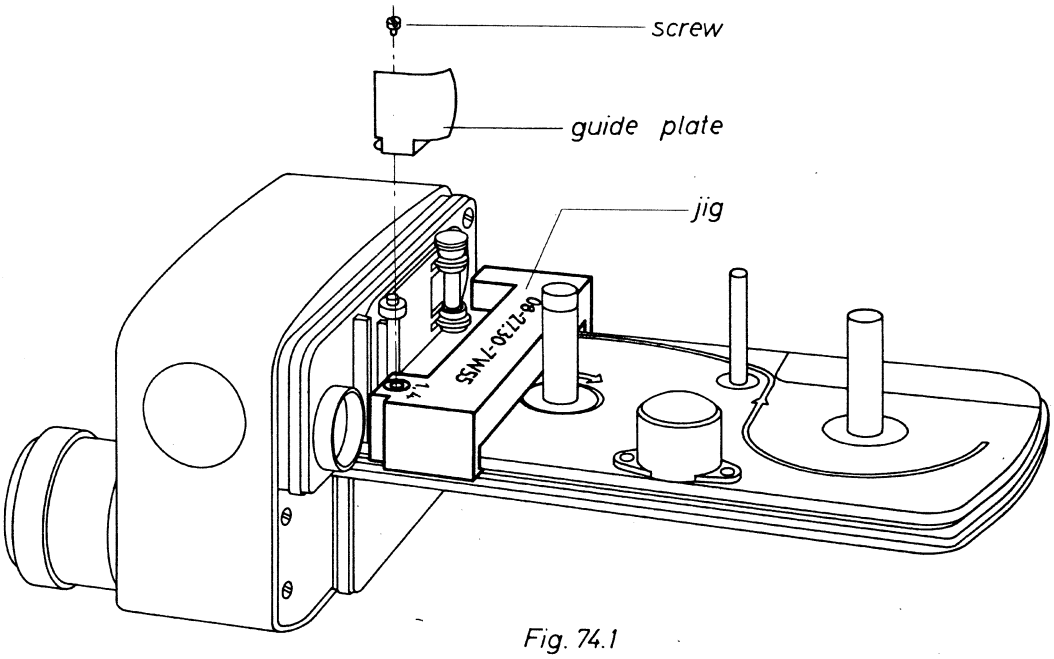

Fig. 74.1

Tissue paper and borings, if any, should be carefully removed.

Remount spool cover.

Test that camera is functioning correctly.

Installation of Film Guide Rail

Sheet 54

Spare Parts and Aids

1. Guide rail 08-27.30-999
2. Pressure plate 08-27.30-37 (if required)
3. Agomet U3, 50 gramme tube
4. Hardener for Agomet U3, 10 gramme tube

Sequence of Operation

Detach spool cover of the pressure plate.
Lift the engaging pin from its catch and swivel it towards the take-up core (see Fig. 9.1). Remove lockwasher 1.9 DIN 6799 and lift the pressure plate upwards to detach. Note any balance washers present in order that they may bereplaced correctly on re-assembly.

Clean the section of the guide rail to be cemented (see Fig. 75.1). Cement guide rail 08-27.30-999 with Agomet U3 (or Araldite 103 *).

Assemble reworked pressure plate 08-27.30-37 (see Fig. 76.1).

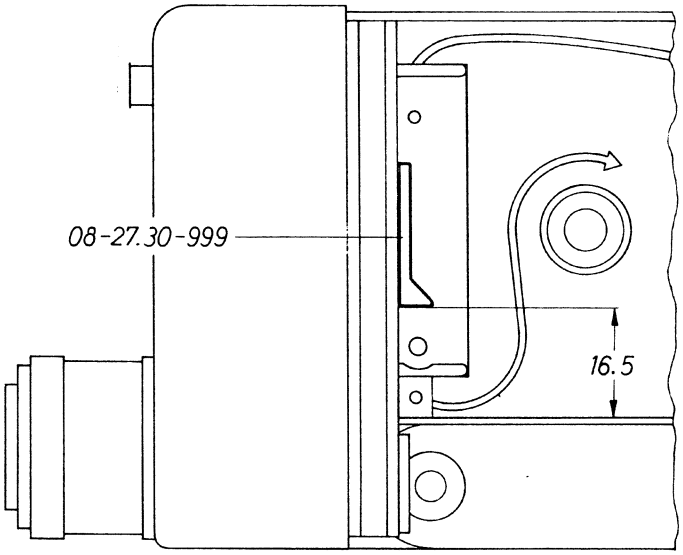

Fig. 75.1

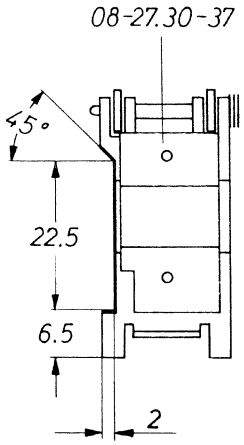

Fig. 76.1

Caution!
It is essential that the lens alignment be checked when work has been completed (see sheet 12.1).

* See Instructions for using Adhesives, spare parts list for Leica M2.

Preventing Entry of Stray Light

Sheet 55

Tools and Aids

1. Screwdriver 3.5 ⌀
2. Spanner 5 mm
3. Araldite 103 * or Agomet U3

Part Required

Cover foil 08-27.30-192

Sequence of Operation

Detach motor cover (see sheet 1.1), and spool cover.
Unscrew 1 hex screw using spanner 5 mm (see Fig. 77.1).
Unscrew two fillister screws using screwdriver 3.5 ⌀.
Detach plate.

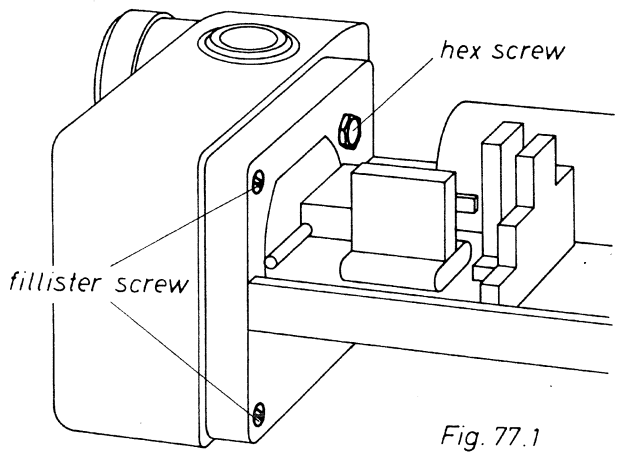

Fig. 77.1

Cement the cover foil on to the plate using Araldite 103* (see Fig. 78.1).
Care must be taken that the cover foil does not scrape on the diaphragm.
Screw on front plate.

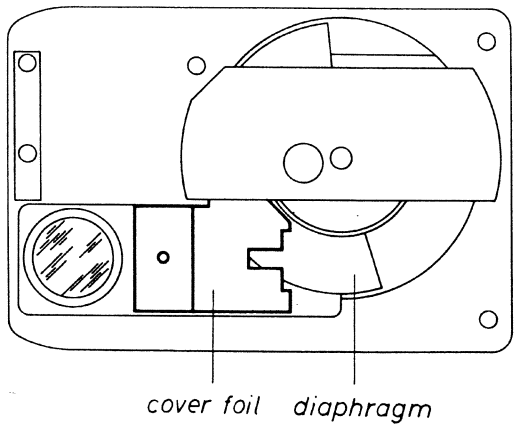

Fig. 78.1

Testing aperture indicator and viewfinder adjustment (see sheet 18).
Mount spool cover and motor cover.
Testing the lens Dygon 1:2 / 15 (see sheet 12).

* See Instructions for using Adhesives, spare parts list for Leica M2.

Mounting the Safety Lever for the Feed Spool

Sheet 56 and 57

Tools and Aids

1.	Drilling jig	08-27.30-252 W11
2.	Riveting device	08-27.30-252 W12
3.	Twist drill 2 ⌀	
4.	Counter bore	LN 144.35.016
5.	Screwdriver 2.8 ⌀	
6.	Hammer 150 grammes	
7.	Centre punch	
8.	Support	

The Following Parts are Required

1.	Lever	08-27.30-203
2.	Axis (with fixing pin)	08-27.30-204
3.	Torsion spring	08-27.30-208
4.	Fillister head screw	M 1.7 x 3 DIN 84

Sequence of Operation

Remove motor cover (see sheet 1.1). Take off spool cover, remove battery. Touch up covering foil (see sheet 10.1). Unscrew battery knob and extract miniature cell.
Place support under plate (see Fig. 79.1). Place drilling jig 08-27.30-252 W11 on to the plate and, with the aid of twist drill 2 ⌀ drill correcting hole. Lift off drilling jig.

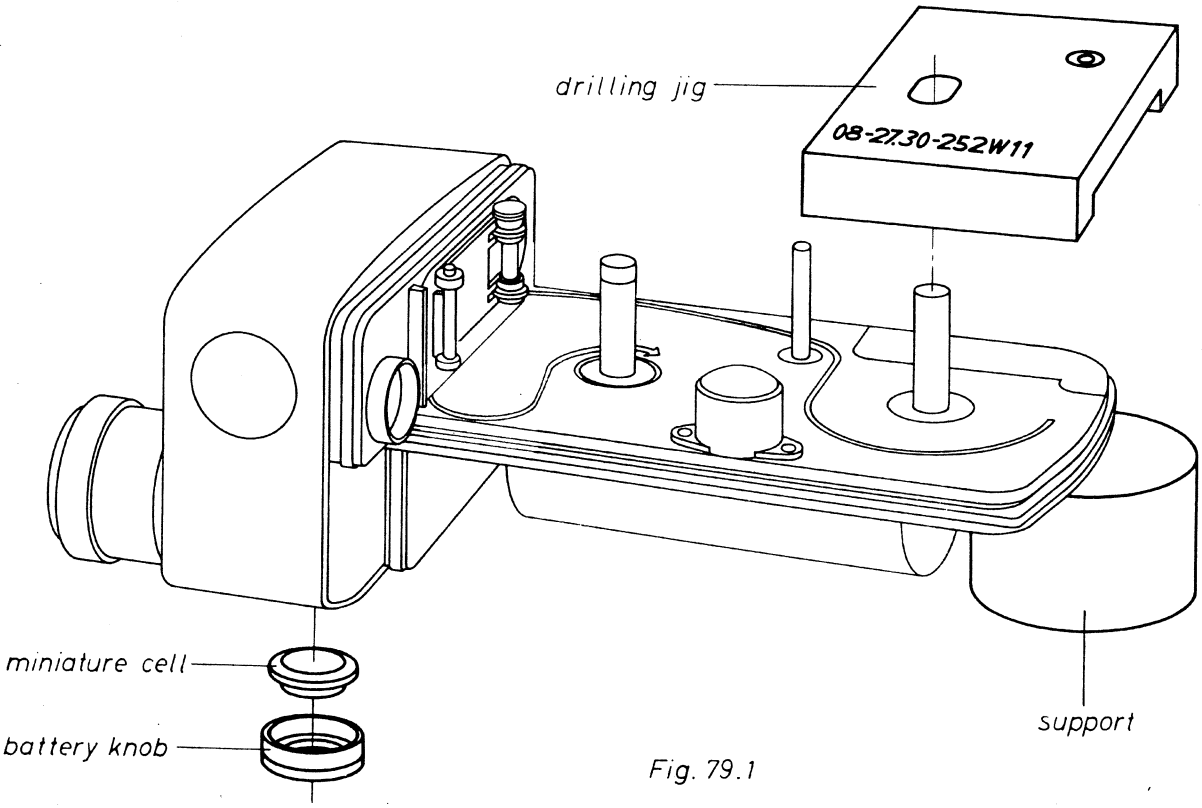

Fig. 79.1

Mounting the Safety Lever for the Feed Spool

Continuation of sheet 56

Using counterbore LN 144.35.16 sink end of opening of borehole on the rear side of plate to the extent of 0.5 mm. Insert axis 08-27.30-204 into the appropriate borehole in rivet device 08-27.30-252 W12.
Caution! Check correct positioning of fixing pin (see Fig. 80.1).

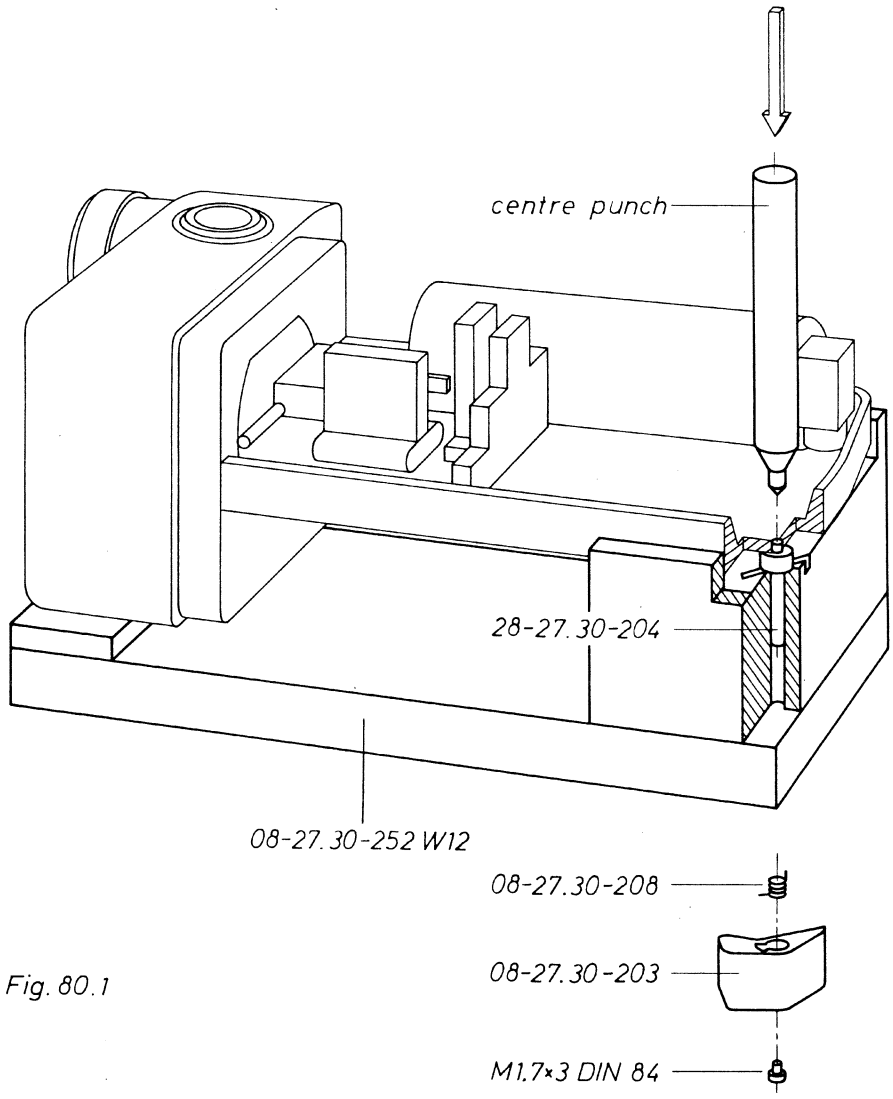

Fig. 80.1

Place front plate with Leicina on to riveting device. Rivet axis into plate using centre punch.
Remove Leicina from riveting device.
Place spiral spring 08-27.30-208, lever 08-27.30-203, on to axis, then screw in fillister screw M 1.7 x 3 DIN 84 with the aid of screwdriver 2.8 ⌀.
Caution! When mounting safety lever ensure that it prevents uncoiling of film on the feed spool after cover is removed.

Mount motor and spool covers.

Installation of the Grip with Lock in the Motor Cover

Sheets 58 and 59

Tools

1.	Twist drill	3.3 diam.
2.	Twist drill	5.2 diam.
3.	Screw tap	M 4 x 0.5
4.	Pin spanner (2 x)	08-27.40 Z1 W7
5.	Key	08-27.40-66 W1
6.	Key	08-28.40-35 W1
7.	Boring jig	08-30.40- 7 W1

The following part is discarded:

1.	Grip	08-27.40-25

The following parts are required:

1.	Grip (with lock)	08-27.400-025
2.	Arresting stud	08-30.40-37

Procedure

Unscrew the fixing screw of the motor cover with key 08-27.40-66 W1, remove the motor cover from the camera.
Unscrew the nut on the grip shaft with the two pin spanners 08-27.40 Z1 W7.
Pull out the grip shaft, remove the grip from the motor cover.
Fix the boring jig 08-30.40-7 W1 on the stand of the motor cover (see fig. 81.1).

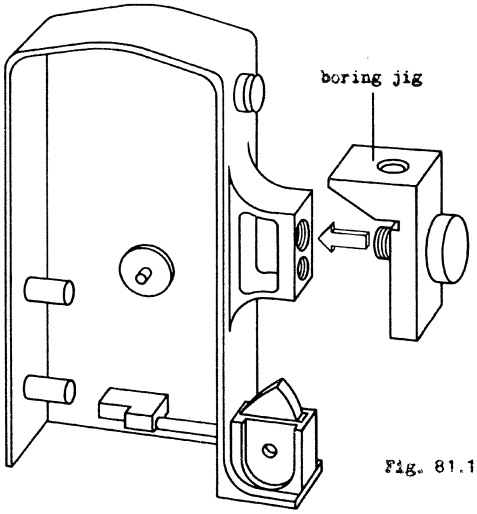

Fig. 81.1

Installation of the Grip with Lock in the Motor Cover

Continuation of sheet 58

Drill a hole of about 2 mm into the stand of the motor cover with the twist drill 3.3 diam. Remove the boring jig, complete the bore. Countersink to about 0.2 mm with twist drill 5.2 diam. (see fig. 82.1).

Cut the thread with the screw tap M 4 x 0.5. Screw the arresting stud into the foot of the stand with key 08-28.40-35 W1.
Mount the grip with lock on the motor cover.

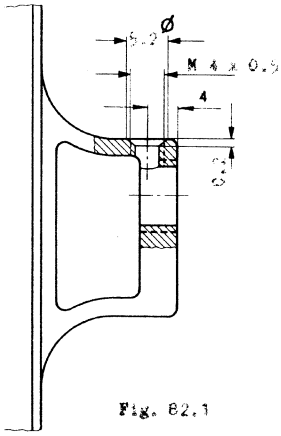

Fig. 82.1

Installation of the Film Thread Mechanism

Sheet 60

Tools and accessories

1. Boring jig	08-27.30-7 W55*
2. Drill 1.65 dia.	
3. Screw tap M 2	
4. Screw driver	
5. Safety varnish	
6. Working cover	08-27.00 Z1 W7

The following parts are required:

1. Friction sleeve	08-30.302-032
2. Guide	08-30.302-144
3. Stop angle	08-30.302-146
4. Tilting piece	08-30.302-147
5. Double-sight take-up spool	

Procedure

Remove spool cover and motor cover. Unscrew screw M 1.7 and remove guides. Push tissue paper behind film pressure plate for protection against drilling. Push the cable tree at the motor bearing away from the edge of the plate. Place working cover 08-27.00 Z1 W7 and drilling jig 08-27.30-7 W55 in position. Drill a hole through the plate with drill 1.65 mm diam. Attention: do not drill cable tree. Remove drilling jig, countersink hole. Cut thread with screw tap M 2. Remove working cover and clean camera thoroughly. Replace old friction sleeve by new sleeve 08-30.302-032. Check friction (see Repair Instructions, Sheet 22). Coat the edge of the M 2 - threaded bore with safety varnish and place stop angle 08-30.302-146 in position (see list of Spare Parts, Sheet 19.2). Screw on tilting piece and adjust the stop angle (see Fig. 83.1). Mount new guide 08-30.302-144. Check automatic film entry (see insert for the Operating Instructions Leicina 8 S, No. [illegible] Leicina 8 SV, No. 211 - 13).
[illegible] Functions.

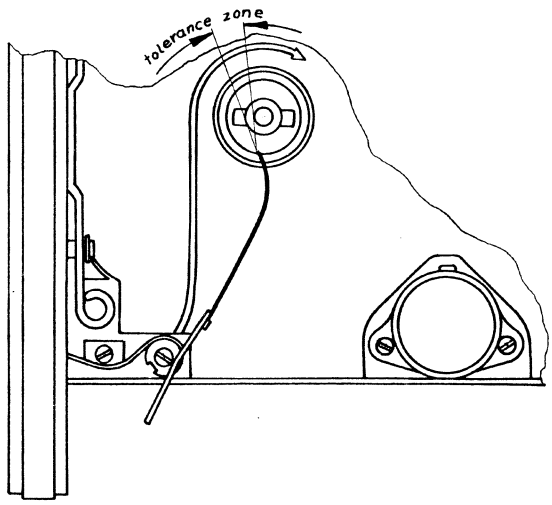

Fig.83.1

*Drilling jig with only one mark must be sent to the factory for conversion.

Checking and Exchanging the Viewfinder Exit 08-28.10-99

Sheet 100, 101, 102 and 103

Tools, Testers and Accessories

1. Screw driver 1.0 ⌀
2. Screw driver 2.2 ⌀
3. Screw driver 2.8 ⌀
4. Screw driver 3.5 ⌀
5. Frame frequency and lens setting instrument 08-27.00 Z1 W14
6. Instrument for aperture indicator and viewfinder setting 08-27.00 Z1 W17
7. Key 08-27.40-66 W 1
8. Key 08-28.10-164 W1
9. Steel plate with emery-paper, grain 180
10. 1 piece of film, 40 mm long, with undamaged emulsion side
11. Rubber cloth
12. Surface mirror 30-260.001-28

Note

In Leicinas stamped with the letter „A" instead of an inspection number the viewfinder beam splitter need not be tested (the letter is visible on the inside of the plate after removal of the motor cover).

Procedure

1. Testing the viewfinder beam splitter

1.1 Screw the lens in the short mount (250 mm focal length) into the frame frequency - and lens adjusting device. Connect the tester to the mains set the lever on the motor drum on +, press the button on the transformer. Focus the crosslines in the eyepiece. Remove the spool cover from the Leicina. Unscrew the motor cover fixing screw with key 08-27.40-66 W1, and remove the motor cover. By turning the intermediate wheel with screw driver 2.2 ⌀ the rotating stop is removed from the picture gate (the intermediate wheel is mounted between the motor gear and the diaphragm shaft). Push on the motor cover. Clamp a piece of film - emulsion side facing the picture gate - between film track and pressure plate, push on and lock spool cover. Set the focal length 15 mm on the setting knob on the side of the camera and turn the focusing ring to ∞. Set the speed control switch on 0 (zero).

1.2 Place the camera on the stage of the tester so that camera lens and lens of tester face each other.
Look through the eyepiece; if two illuminated crosses are visible, one is caused by reflection from the plane surfaces of the viewfinder beam splitter. The cross disappears from the field of view by a slight displacement of the camera on the eyepiece side towards the observer. Focus the remaining cross by turning the helical mount. Tilt the Leicina around the lens axis through about 45 ° away from the observer. If this causes a relative change in sharpness or colour between the horizontal and vertical crossline the viewfinder beam splitter must be exchanged. (The defect is similar to astigmatism in the optical axis: - at a normal camera position the crosslines appear equally sharp while during a rotation of 45 ° the sharpness or colour changes relatively to a certain extent.)

TECHNISCHER KUNDENDIENST

Checking and Exchanging the Viewfinder Exit 08-28.10-99

Continuation to sheet 100

The following procedure should be adopted if accurate judgement is not possible: Remove the viewfinder beam splitter (see procedure 2). Set up the surface mirror vertically at a distance of about 100 mm in front of the tester lens. Focus the bright cross appearing in the eyepiece. Introduce the viewfinder beam splitter roughly vertically into the beam between mirror and lens. If the bright cross is now duplicated in the eyepiece, the viewfinder beam splitter must be replaced.

2. Replacement of the viewfinder beam splitter

The following parts are necessary:

1. Viewfinder beam splitter 08-28.10- 99
2. Distance ring 08-35.10-101 (if required)

Unscrew the motor cover fixing screw with key 08-27.40-66 W1, and remove the motor cover. Clamp the camera on to the stop indicator and viewfinder adjustment rig.
Turn the small knurled knob below the lens anticlockwise as far as possible.
Focus the circle in the eyepiece.
Set the zoom control on 25, the scale ring on ∞.
Align the groundglass screen accurately with the camera viewfinder (see Fig. 120.1). Remove the Leicina, leave the groundglass screen mount on the adjustment rig unchanged.

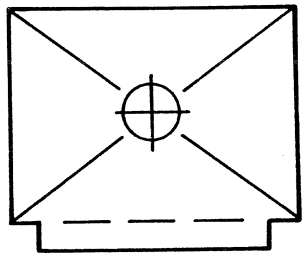

Fig. 120.1

2.1 Unscrew three grub screws on the circumference of the scale ring through three turns with screw driver 1.0 ∅, remove the scale ring (see Fig. 121.1). Unscrew the guide ring with the key 08-28.10-164 W1.

Unscrew two cylindrical head screws on the cover ring with screw driver 2.8 ∅; remove ring.
Unscrew the Variogon lens from the front plate with a rubber sheet.

2.2 Unscrew two cylindrical head screws holding the viewfinder beam splitter, remove beam splitter.
Insert a new viewfinder beam splitter and tighten so that it can still be moved by hand.

The unserviceable viewfinder beam splitter will be replaced free of charge on return to Wetzlar.

Checking and Exchanging the Viewfinder Exit 08-26.10-99

Continuation to sheet 100 and 101

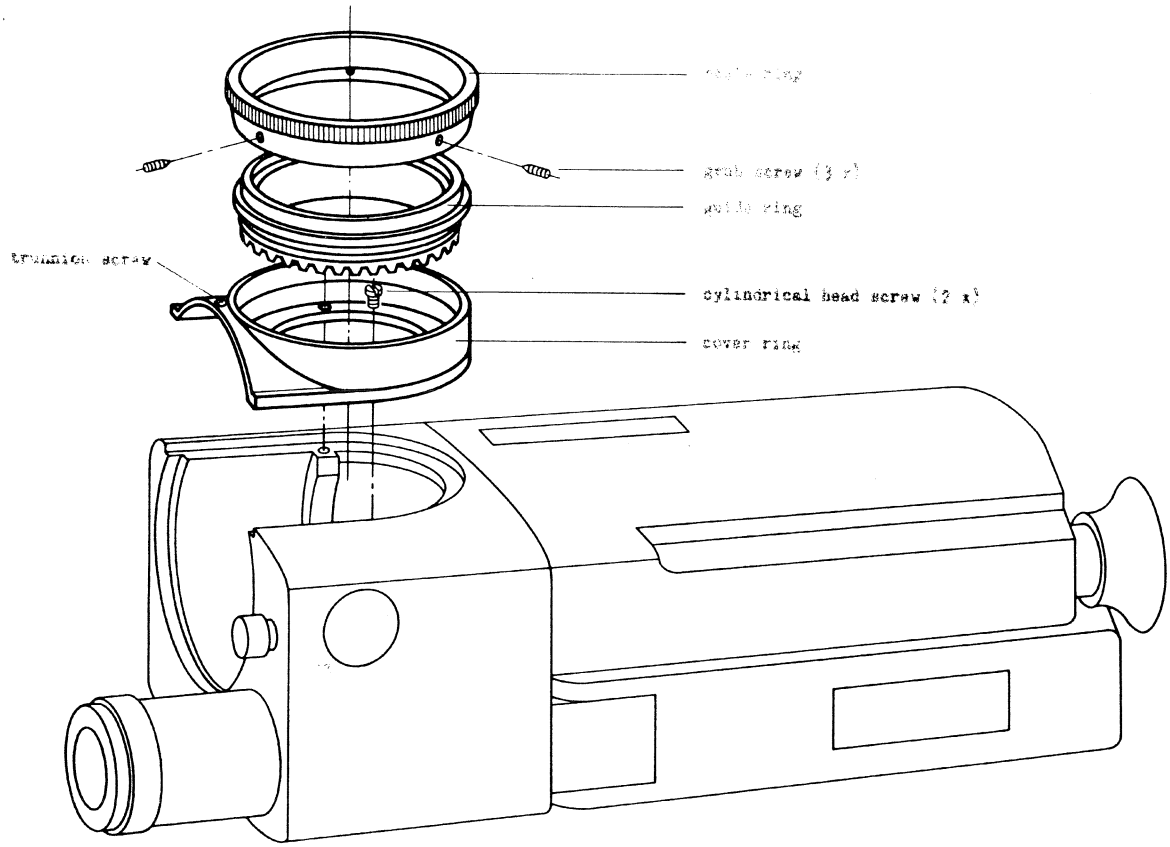

Fig. 121.1

3. Alignment of the viewfinder beam splitter

3.1 Replace the camera on the stop indicator and viewfinder adjustment rig.

Align the viewfinder beam splitter with the groundglass screen of the rig by slightly rotating it to the left or right; the spool stops for the diaphragm automatics must not be touched.

3.2 If it is not possible to move the groundglass screen crosslines into the centre of the eyepiece circle the two bores for the viewfinder beam splitter fixing screws must be opened up 0.2 to 0.3 mm (see Fig. 122.1).

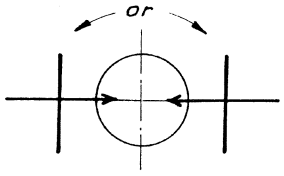

open bores for screws

Fig. 122.1

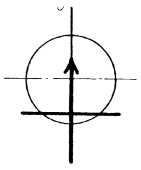

insert distance ring

Fig. 123.1

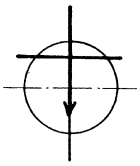

rub down base of the viewfinder beam splitter

Fig. 124.1

Checking and Exchanging the Viewfinder Exit 08-28.10-99

Continuation to sheet 100 to 102

3.3 If the cross lies below the circle, the spacing ring 08-36.10-101 is placed between the viewfinder beam splitter and the built-in lens (see Fig. 123.1).
If the cross now lies above the circle the ring must be ground down with the emery paper glued onto the steel plate. If the centre of the cross lies only a little below that of the circle, it is better to align it by adjusting the deflecting mirror; otherwise the intermediate ring 08-35.10-101 must be ground down too much.

3.4 Remove the round metal cover on the underside of the front plate (see Fig. 20.1).
Unscrew the two large cylindrical head screws through 1/2 turn with screw driver 3.5 ∅.
The cross can be aligned vertically by turning the rear eccentric screw, and horizontally by turning the front eccentric screw. The two large cylindrical head screws are now retightened.
Due to the adjustment of the mirror the viewfinder adjustment has been altered to ∞. The groundglass screen crossline in the eyepiece of the spool cover must be in sharp focus.

3.5 See Sheets 39 and 40, procedure 9.4, 9.5 and 9.6.

3.6 If the groundglass screen crosslines lie above the eyepiece circle the base of the viewfinder beam splitter on the built-in lens must be ground down (see Fig. 124.1).
If the centre of the cross lies only a little above that of the circle, it is better to align it by adjusting the deflecting mirror; otherwise the ring-shaped underside of the viewfinder beam splitter must be ground down too much.

3.7 See procedures 3.4 and 3.5.

3.8 After adjustment of the viewfinder beam splitter remove the camera from the tester, and tighten the two cylindrical head screws on the viewfinder beam splitter with screw driver 2.2 ∅. Check whether the viewfinder beam splitter has been displaced.
Write a conspicuous „A" in place of the inspection number with a copying pencil.

Adjust the stop indicator (see Sheet 104).

Screw the Variogon lens into the front plate, and mount the scale ring; when fitting the ring cover, the shank screw must engage in the bore in the rear lens mount (see Fig. 121.1).
Replace the round metal cover on the underside of the front plate.

Check all camera functions.

Adjustment of the Stop Indicator

Sheet 104

Tools

1. Screw driver 1.4 ⌀
2. Screw driver 2.8 ⌀
3. Brass forceps

Procedure

Checking the position of the stop indicator.

Set the speed control switch on the side of the front plate on 0. Point the camera with the front plate at a light source - e.g. a window or a lamp without glare; check through the eyepiece whether the stop indicator points to the left of the number 2, and, after the speed control switch has been set on RT, to the right of number 16 (see Fig. 125.1).

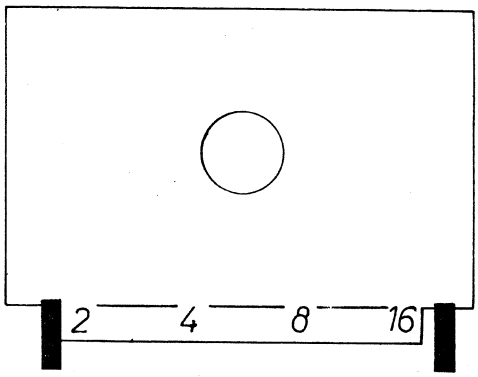

Fig. 125.1

Adjusting the stop indicator.

Failing this, remove the scale ring and the lens (see Sheet 101, procedure 2.1). Carefully adjust the pointer with brass forceps.
Check resistance R 1 (see Sheet 112, procedure 7).
Screw the lens into the front plate, and replace the scale ring.

Testing the Speed

Sheet 105 and 106

Tools, testers and accessories

1. Screw driver 1.8 ∅	
2. Screw driver 3.5 ∅	
3. Working cover	08-27.00 Z1 W 7
4. Testing set for electric drive	08-27.00 Z1 W 8
and battery housing for same	08-27.00 Z1 W 8 U5
5. Frame frequency and lens alignment set	08-27.00 Z1 W14
6. Key	08-27.40-66 W 1
7. Two film spools with test film	
8. Transparent tape 104, black, 15 mm broad	

Procedure

1. Screw the lens in the short mount (250 mm focal length) into the frame frequency - and lens adjusting device. Set the lens to 0 (zero) and focus the crosslines in the eyepiece. Arrest the lever of the motor drum of the testing instrument on position 16, connect the instrument to the mains and switch on press the transformer.

2. Take off the spool cover, insert the test film and push on the spool cover.
   Unscrew the motor cover fixing screw with key 08-27.40-66 W1, and remove the motor cover. Connect testing set for electric drive to electric light current with connecting flex and switch on. Connect battery housing to set and insert in camera. Unscrew the black push button on the working cover and push the cover onto the Leicina. Set the switch lever of the tester on 5.2 v. Set the knob on the side of the camera on 48 mm focal length and then the scale ring on ∞. Set the speed setting switch on 16 f. p.s. Close automatic exposure system beyond 9. Place Leicina on stage of test set, so that camera lens is positioned opposite the lens of the test set. Press down the release pin for continuous running (thread bush without red mark).

3. Both light-strips which are visible in the eyepiece and arranged one above the other in a circular position, must turn in opposed directions.

   The permissable tolerance limit is reached, when one arc of light stops. If both arcs turn in the same direction, a fault is indicated.

4. Possible causes of malfunction

   Both light bands move to the right.
   The friction inside the drive mechanism is excessive (see test of current consumption sheet 107).

   The motor speed must be corrected (adjustment see under 5.).

Testing the Speed

Continuation of sheet 105

5. If both light bands move to the left the motor speed is incorrect, and must be corrected as follows:

   remove the working cover. Unscrew the motor cover fixing screw with screw driver 3.5 Ø. Remove motor screen. Undo the insulation at the terminal of the motor. Turn the screw at the motor terminal anticlockwise with screw driver 1.8 Ø (see fig. 126.1). Push the working cover onto the camera. Release continuous running and test whether the filming speed is correct. If not, the screw on the motor terminal must be turned further. If an accurate adjustment by the screw is not possible, the motor must be exchanged (see sheet 113).

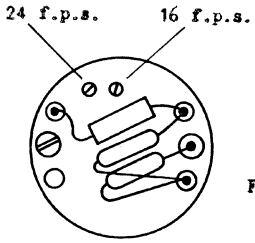

Fig. 126.1

6. Set the speed control switch on the front plate and the lever on the motor drum of the tester on 24.

7. See procedure 3, 4, 5.

8. Remove the working cover.
   Cover the motor terminal with black Tesafilm. Screw on the motor screen. Push on and fix the motor cover.

Adjusting the Front Plate

Sheet 108, 109 und 110

Tools, testers and accessories

1. Screw driver 1.0 ø
2. Screw driver 2.8 ø
3. Screw driver 3.5 ø
4. Spanner 5 mm
5. Test lamp 08-27.10 Z1 W 5
6. Reading instrument with resistance preselection 08-27.10 Z1 W13
7. Key 08-28.10-164 W1
8. Graphite
9. Brass forceps
10. Handle
11. Soldering iron
12. Rubber

Procedure

Calibrate the test lamp and reading instrument with resistance preselection (see Calibrating Instructions, Spare Parts List for the Leica M2, Sheet 6).*

Remove the motor cover and the spool cover. Unscrew a hexagon nut with the 5 mm spanner (see Fig. 77.1).
Unscrew two cylindrical head screws with the screw driver 3.5 ø. Remove front plate.
Set film speed of 15 °DIN on the DIN ring of the illuminating optics. Rotate the illuminating optics anti-clockwise until the red line is situated a few mm from the red circle. Turn the illuminating optics back until they engage.

1. Checking the diaphragm aperture

1.1 Set the speed control switch on the front plate on RT.
Look through the built-in lens into the open front plate to check whether the diaphragm aperture corresponds with Fig. 128.1.
It can be corrected by changing the two spool stops after removal of the Variogon lens (see Fig. 129.1).

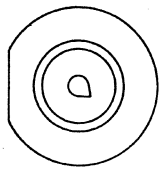

Fig. 128.1

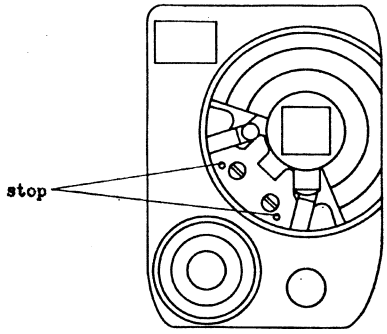

Fig. 129.1

* Replace the black square engraved 8 S on the front plate of the reading instrument by the plate engraved 8 V / 8 SV.

Checking the Diaphragm Aperture

Continuation to sheet 108

1.2 Set the scale ring on ∞ (see Fig. 121.1). With screwdriver 1.0 ⌀ loosen three grub screws on the circumference of the scale ring through three turns, remove the scale ring.
Unscrew the guide ring with key 08-28.10-164 W1. Unscrew two cylindrical head screws on the cover ring with screwdriver 2.8 ⌀. Remove cover ring.
Unscrew the Variogon lens from the front plate with a rubber sheet.

1.3 Change the stops for the spool with brass forceps (see Fig. 129.1) until the shape of the aperture is correct. Paint the stops with graphite where they touch the spools.

1.4 Unscrew the battery knob from the front plate take out the battery.
Turn the speed control switch on 16 f.p.s.
Place the front plate support of the test lamp on the felt strip above the push buttons (see Fig. 130.1).
Pull the contactor in the direction of the arrow. Place the front plate on its support and clamp by depressing the pressure device. Insert the contactor in the direction of the arrow (2) and lock (3). Push the slip-on ring on to the large opal disc (see Fig. 130.1).
Lift the top of the front plate support by the black knob and tilt against the stop.

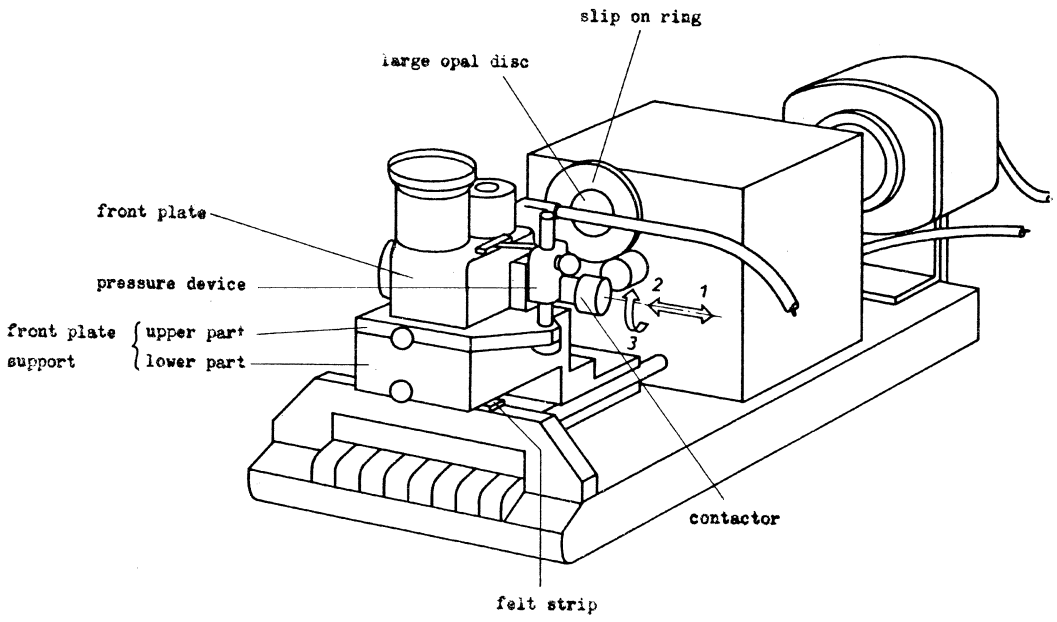

Fig. 130.1

Checking the Diaphragm Aperture

Continuation to sheet 108 and 109

2. Testing the resistance

2.1 Press push button 3 on the test lamp.

2.2 Set the black setting knob in the left bottom of the front plate of the reading instrument on adjustment R 24, R32.

2.3 Tap the front plate support with a wooden handle until the pointer of the reading instrument stops on 0 (zero) ± 0.25.

2.4 Press push button 7.

2.5 Tap the front plate support; the pointer must stop between 0 and 1/4 stop to the left.

2.6 Set the speed control switch on the front plate on 24. Push button 7 remains depressed.

2.7 Tap the front plate support, the pointer must stop between 0 and 1/4 stop to the right.

2.8 If the pointer deflections during procedures 2.3, 2.5 and 2.7 do not correspond with the required values, the resistances must be exchanged.

2.9 Tilt the bottom of the front plate support in the direction of the push buttons.

2.10 Unsolder the resistances (see Fig. 131.1).

2.11 Fold the bottom of the front plate support against the top.

3. Adjustment of the resistance R 1

3.1 Pull the black adhesive strip from the tag block. Solder the three wires of the connecting cable to the tag block as shown in Fig. 132.1.

Place the wires into the recess next to the black knob (on the top of the front plate support).

3.2 Set the black knob on adjustment R 1. Turn the green dials to about 29.0 KΩ. Turn the centre dial slowly to the left, until the spools of the diaphragm automatics just touch the stops. The numbers vertically below the index (e.g. 15.0) indicate the values for R 1 in KΩ (see list of parts, Spare Parts List, Sheet 9). Have the resistance R 1 ready.

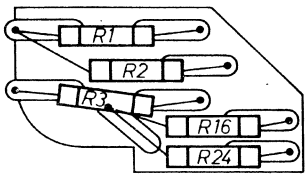

Fig. 131.1

3.3 Press the red button (engraved 1.2 V) to the left of the green dials; the spools of the diaphragm automatics must now be seen to move about 1 mm away from the stops.

3.4 Fold the top of the front plate support down. Screw the Variogon lens into the front plate. Set the knurled knob on the side on focal lenght 20 mm.
Lift the front plate support, pushing it away from the observer.

4. Adjusting the resistances

4.1 Press push button 3.

Checking the Diaphragm Aperture

Continuation to sheet 108 to 110

4.2 Gently tap the front plate support with the wooden handle, bring the pointer to 0 ± 0.25 by turning the yellow dials on the front plate of the reading instrument.

4.3 Press push button 7.
Gently tap the front plate support with the wooden handle; obtain a pointer deflection to the left between 0 and 1/4 stop by turning the black dials.

4.4 Repeat procedures 4.2 and 4.3 several times. The numbers set on the yellow and black dials indicate the value of the resistances R 3, R 16. Have the resistances ready.

4.5 Turn the yellow dials until the pointer moves 1/2 stop to the right from 0. Have the resistance R 24 ready.

4.6 Open the front plate support. Unsolder the three wires from the tag block. Solder the resistances R 3, R 16, R 24 and R 1 into the front plate according to the values found (see Fig. 131.1). Close the front plate support.

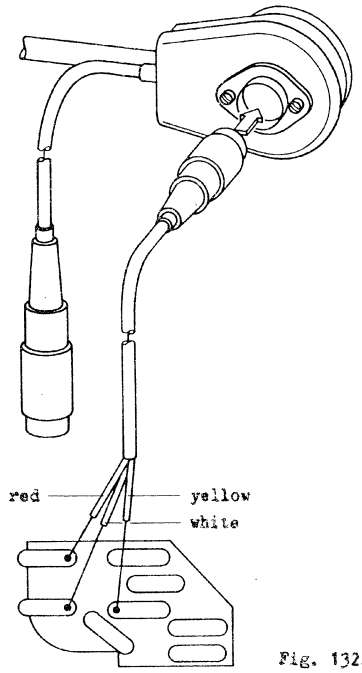

Fig. 132.1

5. Testing the resistances

5.1 Press push button 3.

5.2 Tap the front plate support with the wooden handle; check whether the pointer of the reading instrument remains at 0 ± 0.25.

5.3 If it fails to do so, open the front plate support and unsolder, e. g. resistance R 3. It will then be sufficient to insert another resistance of the same rating.
If this does not lead to a more accurate pointer position a resistance of higher or lower rating should be used.

6. Testing the resistance R 24

6.1 Set the speed control switch on the front plate on 24.

6.2 The pointer of the reading instrument must move 1/4 stop to the right from 0. Failing this the resistance R 24 must be exchanged.

6.3 If this produces no correction of the pointer movement the cable connections on the speed control switch on the front plate must be checked.

Checking the Diaphragm Aperture

Continuation to sheet 108 to 111

7. Testing the resistance R 1

7.1 Set the speed control switch on the front plate on RT. The spools of the diaphragm automatics move against the stops.

7.2 If the spools do not move against the stops the resistance R1 must be exchanged.
Push the front plate support in the direction of the push buttons, remove the front plate.
Stick the black adhesive strip on the tag block. Screw the battery knob with battery into the front plate. Screw the plate onto the front plate.
Push on the spool cover and check the pointer adjustment (see Sheet 104).

Exchanging the Motor

Sheet 113 and 114

Tools

1. Assembly rig 08-27.30-116 W1
2. Key 08-27.40- 66 W1
3. Screw driver 3.5 Ø
4. Soldering iron

The following parts are necessary

1. Motor 302-050.025-01
2. Screen, self adhesive 08-27.30-262
3. Washer 15-12.10-26/5
4. Washer 15-12.10-26/6

Procedure

1. Undo the motor cover fixing screw with key 08-27.40-66 W1, remove motor cover.
   Remove the spool cover. Take out the battery or accummulator.
   Remove the film pressure plate. Unscrew the screw holding the safety lever on the plate. Pull the safety lever with torsion spring off the shaft.
   Pull the cover foil off the plate. Unscrew the motor screen fixing screw with screwdriver 3.5 Ø, remove the screen.
   Unscrew two screws fixing the motor bearing to the plate with screw driver 3.5 Ø. Remove the motor with bearing carefully from the plate.
   Unsolder five cables on the motor terminal with the soldering iron.
   Unscrew the motor bearing from the motor.
2. Place so many washers (15-12.10-26/5; 15-12.10-26/6) inbetween motor and motor bearing that a gap of 0,1 - 0,15 mm appears when not yet screwed together. Then place the motor and the bearing in to the assembly device.

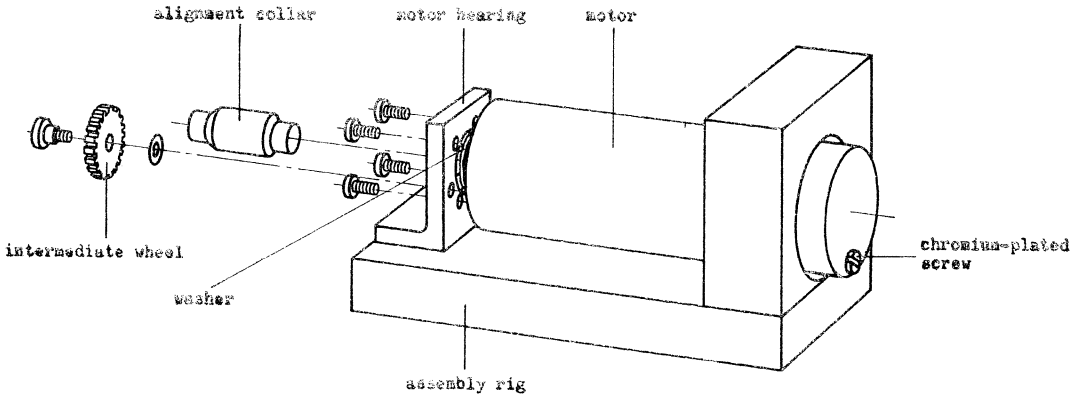

Fig. 133.1

Exchanging the Motor

Continuation of sheet 113

Push the alignment collar of the assembly rig over the motor gear into the motor bearing with the suitable adapter. Before tightening the four screws of the motor bearing ensure that the chromium-plated screw on the motor terminal is at the bottom (see Fig. 133.1). Remove the alignment collar from the motor gear. Screw the intermediate wheel and washer onto the motor bearing.

3. Remove the motor from the assembly rig, solder the cables to the motor terminal. Place the motor on the plate and screw the motor bearing down. Fix the cover foil on the plate (see Sheet 10).
   Mount the film pressure plate (see Sheet 8).
   Test the motor speed (see Sheet 105).

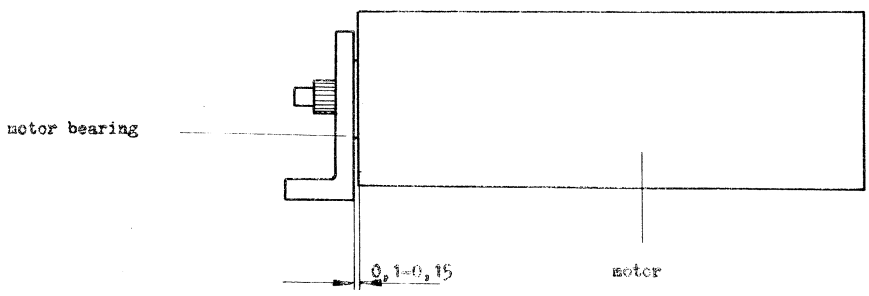

Fig. 134.1

Elimination of functional failures

Sheets 115 and 116

Tools

1. Assembly set 08-27.30-116 W1
2. Spanner 08-27.40- 66 W1
3. Screw driver

The following parts are necessary

Bearing shield (pair of) 08-27.300-165

Condition of Camera

If there is too much play in the bearings of the motors 302-050.041 and 302-050.042, the axis may be dislocated or the motor may be blocked when the motor is stopped.

Procedure

Remove the motor (see instruction page 34.1). Loosen the screws of the intermediate wheel and of the motor bearing and place the two halves of the shield into the appropriate insert, see figure 135.1. Enlarge the opening for the motor axis to 2.1 mm ∅. Place the shield onto the motor and slide the bearing on again. Care should be taken that the axis does not touch the edges of the opening of the shield. It is recommended that the two shield halves should be pressed outwards against the mould of the bearing.

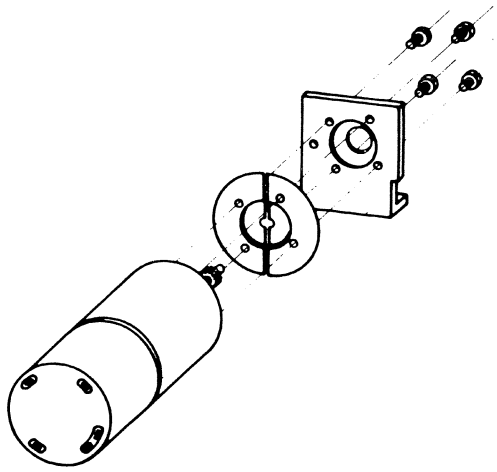

Fig. 135.1

Assemble the motor. (See servicing instructions sheet 34 and 35) Especially check the engagement of the intermediate gear.

Elimination of functional failures

Continuation of sheet 115

Remove the stop-switch and round off slightly the two edges of the micro-switch - stop-switch holder (see figure 136.1) as indicated. Clean off any lubricant and wind 6 mm wide TESA 108 tape twice around it. The adhesive tape has to stick on over the whole surface to avoid loosening.

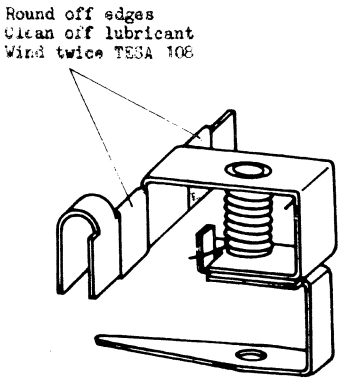

Fig. 136.1

Readjust stop- and micro-switch (see instructions page 4 - 6).

12. 1.68

Adjusting the Front Plate

Sheet 150 to 153

Tools, testers and accessories

1. Screw driver 3.5 ø
2. Spanner 5 mm
3. Test lamp 08-27.10 Z1 W 5
4. Reading instrument with resistance preselection 08-27.10 Z1 W13
5. Shield 08-30.10 Z1 W 6
6. Key 08-30.10-136 W2
7. Brass forceps
8. Soldering iron
9. Handle

Procedure

Calibrate the test lamp and reading instrument with resistance preselection (see Calibrating Instructions, Spare Parts List for the Leica M2, Sheet 6).
Replace the black square engraved 8 S on the front plate of the reading instrument by the plate engraved 8 V / 8 SV.
Unscrew the zoom control lever on the accessory lens. Unscrew the lens retaining ring with key 08-30.10-136 W2.
Remove the motor cover and the spool cover. Unscrew a hexagon nut with the 5 mm spanner (see Fig. 77.1).
Unscrew two cylindrical head screws with the screw driver 3.5 ø. Remove front plate.
Unscrew battery knob, take out battery. Set the DIN ring of the illuminating optics on a film speed of 15 ° DIN. Rotate the illuminating optics anticlockwise until the red line lies a few mm from the red circle; turn the illuminating optics back until it engages. Turn the speed control switch on 16 f.p.s.
Place the front plate support of the test lamp on the felt strip above the push buttons (see Fig. 221.1).

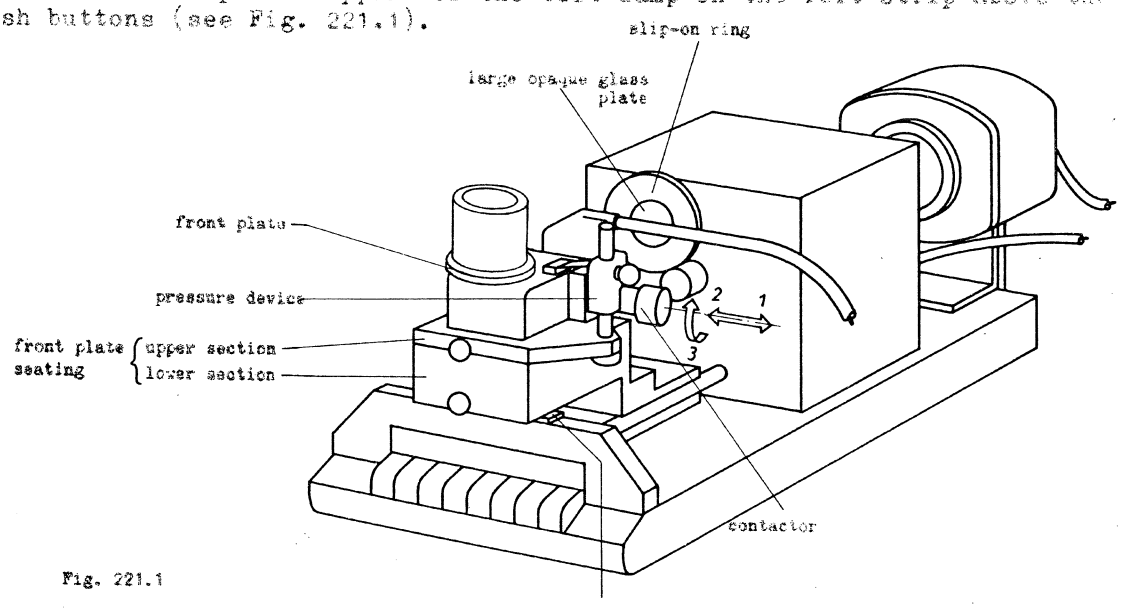

Fig. 221.1

Adjusting the Front Plate

Continuation to sheet 150

Pull the contactor in the direction of the arrow (1).
Place the front plate on the front plate support and clamp it by depressing the pressure device. Insert the contactor in the direction of the arrow (2) and lock (3).
Push the stop 08-30.10 Z1 W6 on the front plate.
Push the slip-on ring on the large opal disc (see Fig. 221.1).
Lift the top of the front plate support by the black knob and tilt against the stop.
Lift the bottom of the front plate support and fold it against the top.
Push the front plate support away from the observer, so that the stop just touches the large opal disc.

1. Checking the diaphragm aperture

1.1 Set the speed control switch on the front plate on RT. Look through the built-in lens into the open front plate to check whether the diaphragm aperture corresponds with Fig. 222.1.

1.2 It can be corrected by removing the diaphragm automatics and changing the two spool stops (see Sheet).

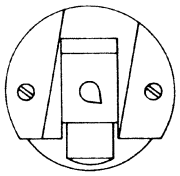

Fig. 222.1

2. Checking the resistance

2.1 Set the speed control switch on 16 f.p.s. Press knob 2 on the instrument.

2.2 Set the black knob on the bottom left of the front plate of the reading instrument on adjustment R 24, R 16.

2.3 Tap the front plate support gently with a wooden handle, until the pointer of the reading instrument rests on 0 (zero) ± 0.25.

2.4 Press push button 6.

2.5 Tap the front plate support gently with the wooden handle until the pointer of the reading instrument rests on 0 ± 0.25.

2.6 If it fails to do this remove the stop above the lens retaining ring, tilt the bottom of the front plate support in the direction of the push buttons.

2.7 Unsolder all resistances from the tag block.

2.8 Fold the bottom of the front plate support against the top.

3. Adjusting the resistance R 1

3.1 Solder the three wires of the connecting cable to the tag block (see Fig. 223.1).
Place the wires in the recess next to the black knob (on the top of the front plate support). Close the front plate support.

3.2 Set the black knob on adjustment R 1.
Turn the green dials to about 29.0 KΩ. Turn the centre dial slowly to the left until the spools of the diaphragm automatics just touch the stops.
The numbers vertically below the index (e.g. 15.0) indicate the values for R 1 in KΩ (see parts list of the spare parts list, sheet 9).
Have the resistance R 1 ready.

Adjusting the Front Plate

Continuation to sheet 150 and 151

3.3 Press the red button (engraved 1.2 V) to the left of the green dials; the spools must be seen to move about 1 mm away from the stops.

3.4 Push the stop over the lens retaining ring of the front plate, lift the front plate support, pushing it away from the observer.

4. Adjusting the resistances R 16, R 3, R 24

4.1 Press push button 2.

4.2 Steadily tap the front plate support with the wooden handle, and bring the pointer to 0 ± 0.25 by turning the yellow dial on the front plate of the reading instrument.

4.3 Press push button 6.
Steadily tap the front plate support with the wooden handle, and bring the pointer to 0 ± 0.25 by turning the black dials.

4.4 Repeat procedures 3.2 and 3.3 several times. Have the resistances R 16 and R 3 ready.

4.5 Turn the yellow dials until the pointer moves 1/2 stop to the right from 0. Have Resistance R 24 ready.

4.6 Open front plate support. Unsolder the three wires from the tag block. Solder the resistances R 1, R 3, R 24 and R 16 into the front plate block. Solder the resistances R 1, R 3, R 24 and R 16 into the front plate according to the determined values (see Fig. 224.1). Close the front plate support.

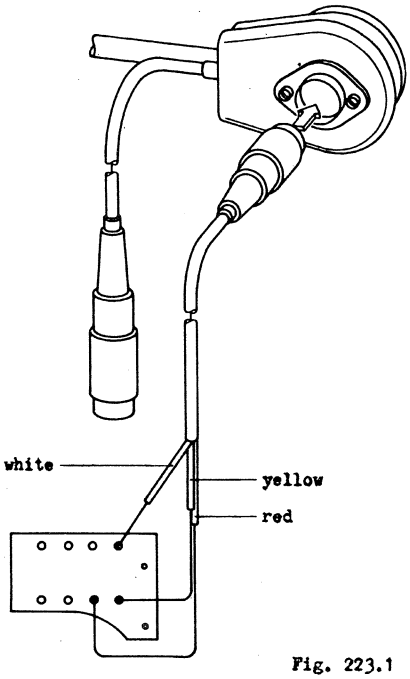

Fig. 223.1

5. Checking the resistances R 3, R 16

5.1 Press push button 2.

5.2 Steadily tap the front plate support with the wooden handle; check whether the pointer of the reading instrument rests on 0 ± 0.25.

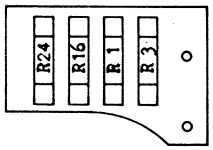

Fig. 224.1

5.3 If it fails to do this, open the front plate support and unsolder, e. g. resistance R 16. It will often be sufficient to replace it by another resistance of the same rating.
If this does not produce a more accurate pointer position a resistance of higher or lower rating should be used.

6. Checking the resistance R 24

6.1 Set the speed control switch on the front plate on 24 f. p. s.

TECHNISCHER KUNDENDIENST

Adjusting the Front Plate

Continuation to sheet 150 to 152

6.2 The pointer of the reading instrument must move through 0.5 stop to the right from 0.
Failing this the resistance R 24 must be exchanged.

6.3 If this does not correct the pointer position, the cable connections of the speed control switch in the front plate must be checked.

7. Checking the resistance R 1

7.1 Set the speed control switch on the front plate on RT. The spools of the diaphragm automatics must just move against the stops.

7.2 Failing this the resistance R 1 must be replaced.
Push the front plate support in the direction of the push buttons, remove the front plate.
Screw the battery knob with battery into the front plate. Set the speed control switch on 0 to save the battery. Check the stop indicator adjustment (see Sheet 154).
Mount the front plate.

Exchanging of the Zoom-Attachment

Sheet 154

Tools

1. Spanner 08-30.10-136 W2
2. Spanner 08-30.10-138 W3

Sequence of Operation

With spanner 08-30.10-136 W2 unscrew the screw ring 08-30.10-136 and carefully take out the zoom-attachment. Take off the distance ring 08-30.10-138 from the attachment with the key 08-30.10-138 W3 and take out the screw ring. Push the screw ring onto the new zoom-attachment, rub some safety lacquer onto the distance ring and screw on with the key 08-30.10-138.
Is the position, of the fixing slot not exactly 180 ° opposite the index for focal length and distance in must be sawn in afresh.
When fixing the zoom attachment the pin in the lens tube must be located in the fixing slats. Screw on the attachment with the key 08-30.10-136 W2 and align the objektiv.

TECHNISCHER KUNDENDIENST

Leicina 8 S	Motordeckel, Griff Motor Cover, Handle	1
Spulendeckel, Maskenrohr, Filmuhr, gültig auch für Leicina 8 V Spool Cover, Graduated Dial Tube, Film Counter, also correct for Leicina 8 V		2
Blendenautomatik, Objektiv, Fotowiderstände Diaphragm Automatic, Lens, Photoresistances		3
Frontplatte, Beleuchtungsoptik, Spiegelstuhl Front Plate, Illuminating Optics, Mirror Support		4
Platine, Blendenachse, gültig auch für Leicina 8 V Plate, Diaphragm Shaft, also correct for Leicina 8 V		5
Andruckplatte, Friktionshülse, gültig auch für Leicina 8 V Pressure Plate, Friction Sleeve, also correct for Leicina 8 V		6
Motor, Schalter Motor, Switch		7
Leicina 8 V	Motordeckel, Griff Motor Cover, Handle	8
Stufenschalter, Lötleiste, Fotowiderstände Speed Setting Switch, Soldering Ledge, Photoresistances		9
Blendenautomatik, Grundobjektiv, Spiegelstuhl, Objektivverstellung Diaphragm Automatic, Built-in Lens, Mirror Support, Lens-Focusing		10
Frontplatte, Beleuchtungsoptik, Variogon-Vorsatzobjektiv Front Plate, Illuminating Optics, Lens Attachment Variogon		11
Motor, Schalter Motor, Switch		12
Leicina 8 SV	Motordeckel, Griff Motor Cover, Handle	13
Spulendeckel, Maskenrohr, Filmuhr Spool Cover, Graduated Dial Tube, Film Counter		14
Blendenautomatik, Objektiv, Fotowiderstände Diaphragm Automatic, Lens, Photoresistances		15
Frontplatte, Beleuchtungsoptik, Spiegelstuhl Front Plate, Illuminating Optics, Mirror Support		16
Platine, Blendenachse Plate, Diaphragm Shaft		17
Andruckplatte, Friktionshülse Pressure Plate, Friction Sleeve		18
Motor, Schalter Motor, Switch		19

15. 3.65

1 Leicina 8 S — Motordeckel, Griff
Motor Cover, Handle

2 Spulendeckel, Maskenrohr
Spool Cover, Graduated Dial Tube

3 Blendenautomatik, Objektiv, Fotowiderstand
Diaphragm Automatic, Lens, Photoresistance

4 Frontplatte, Beleuchtungsoptik
Front Plate, Illuminating Optics

5 Platine, Blendenachse
Plate, Diaphragm Shaft

6 Andruckplatte, Friktionshülse
Pressure Plate, Friction Sleeve

7 Motor, Schalter
Motor, Switch

8 Leicina 8 V — Motordeckel, Griff
Motor Cover, Handle

9 Stufenschalter, Lötleiste
Speed Setting Switch, Soldering Ledge

10 Blendenautomatik, Grundobjektiv
Diaphragm Automatic, Built-in Lens

11 Frontplatte, Beleuchtungsoptik
Front Plate, Illuminating Optics

12 Motor, Schalter
Motor, Switch

13 Leicina 8 SV — Motordeckel, Griff
Motor Cover, Handle

14 Spulendeckel, Maskenrohr
Spool Cover, Graduated Dial Tube

15 Blendenautomatik, Objektiv
Diaphragm Automatic, Lens

16 Frontplatte, Beleuchtungsoptik
Front Plate, Illuminating Optics

17 Platine, Blendenachse
Plate, Diaphragm Shaft

18 Andruckplatte, Friktionshülse
Pressure Plate, Friction Sleeve

19 Motor, Schalter
Motor, Switch

Blatt / Sheet 1.2	LEICINA 8S Prüf 16 ...	

Bestell-Nr / Part-No	Benennung / Description	Leicina-Modell 8 S	8 V	[illegible]
1 x 12 DIN 1481	Spannstift, brüniert / tension pin, [illegible]	1	1	1
2,3 DIN 6799	Sicherungsscheibe / retaining washer	1	1	1
15-11.33-5	Mutter / nut	1		1
15-12.04-8/7	Unterlegscheibe / washer	1	1	1
16-14.042-20	Tellerfeder / cup spring	7	7	7

Blatt Sheet 1.2	LEICINA 8s Prüf 16 ...	Leitz WETZLAR		
Bestell-Nr Part-No	Benennung Description	Leicina-Modell 8 S	8 V	8 SV
08-27.40- 8	Schaltstange switching bar	1	1	1
08-27.40- 9	Druckfeder pressure spring	1	1	1
08-27.40-12	Auslösegriff release handle	1	1	1
08-27.40-20	Profilteil profile plate	1	-	1
08-27.40-30	Achse shaft	1	-	1
08-27.40-34	Abdeckplatte plate	1	1	1
08-27.40-40	Hülse sleeve	2	2	2
08-27.40-41	Druckstift pressure pin	2	2	2
08-27.40-42	Druckfeder pressure spring	2	2	2
08-27.40-43	Drahtauslösernippel, rot ausgelegt wire release nipple, red covered	1	1	1
08-27.40-43	Drahtauslösernippel wire release nipple	1	1	1
08-27.40-44	Anschlagring für Einzelbildschaltung flange ring for single-frame exposure	1	1	1
08-27.40-66	Befestigungsschraube screw	1	1	1
08-27.40-68	Sicherungsscheibe retaining washer	1	1	1
08-27.400-001	Motordeckel, kompl. engine cowl, compl.	1	-	-
08-27.400-007	Motordeckel engine cowl	1	-	-
08-27.400-025	Griff handle	1	-	-
08-27.400-047	Abdeckschraube screw	1	1	-
08-28.40-56	Schalthebel lever	1	-	-
08-28.40-57	Lagerbuchse bush	1	-	-
08-28.40-58	Drehfeder pressure spring	1	-	-
08-30.40-17	Rastriegel locking lever	1	-	1
08-30.40-27	Druckknopf press button	1	-	1
08-30.40-28	Riegelfeder locking spring	1	-	1
08-30.40-37	Rastnippel lock	1	1	1
1,5 m 6 x 14 DIN 7	Zylinderstift, brüniert cylindrical pin, burnished	1	-	1
2 x 18 DIN 1471	Kegelkerbstift pin	1	-	-
[illegible] x 5 DIN 1472	Paßkerbstift, brüniert pin, burnished	1	-	-
[illegible],5 x 10 DIN 1472	Paßkerbstift, verchromt pin, chrome-plated	2	-	2
1,4 x 3 DIN 1477	Senkkerbnagel, verchromt countersunk rivet, chrome-plated	2	2	2

TECHNISCHER KUNDEN

15. 3.65

Ernst Leitz GmbH Wetzlar	LEICINA 8s Prüf 16 ...	Blatt Sheet 1.2

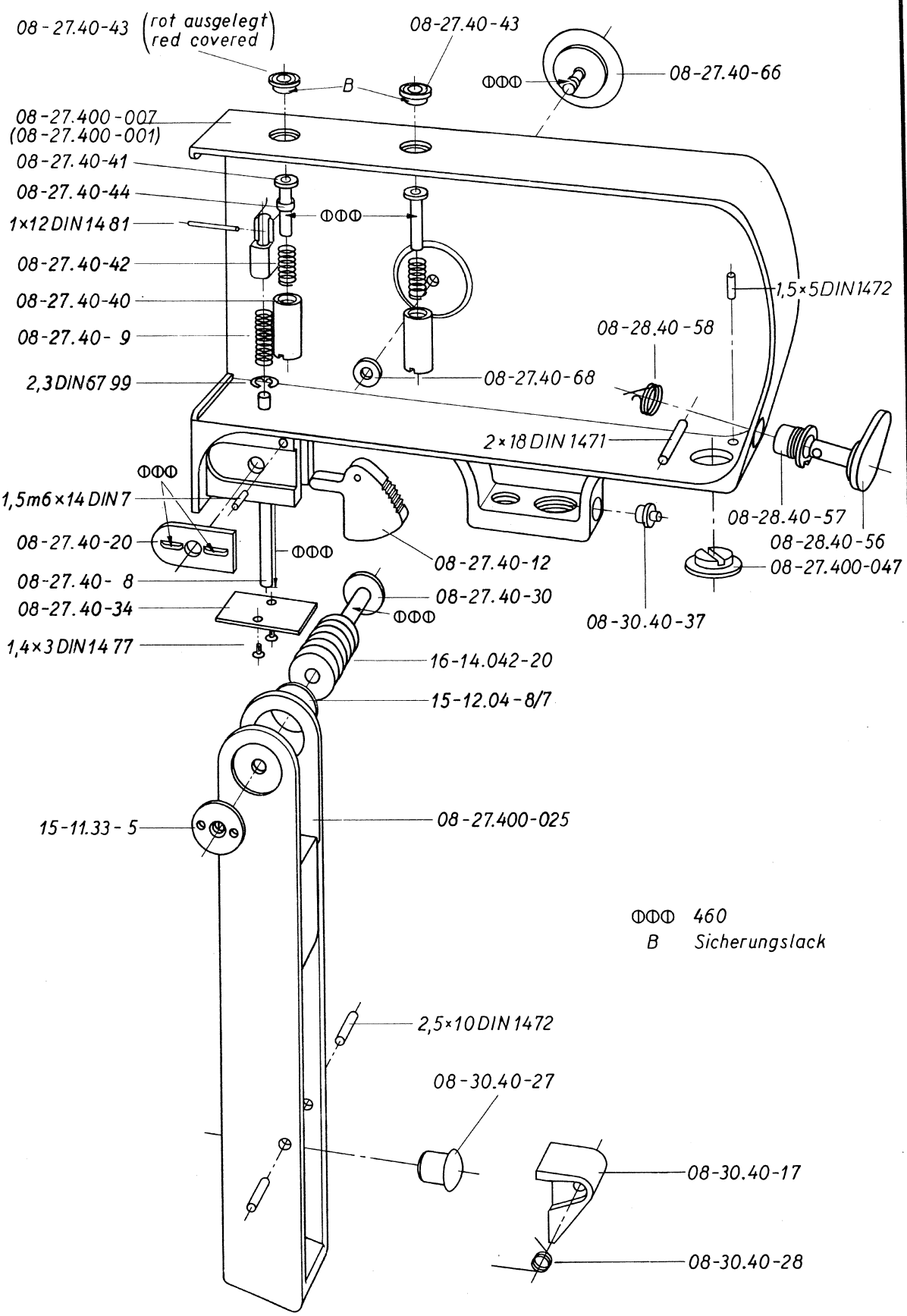

TECHNISCHER KUNDENDIENST

15. 3.65

Blatt Sheet 1.1	LEICINA 8S ohne without Prüf... Prüf 15	Ernst Leitz GmbH Wetzlar		
Bestell-Nr Part-No	Benennung Description	Leicina-Modell 8S	8 V	8 SV
08-27.40- 1	Motordeckel, kompl. engine cowl, compl.	1	-	-
08-27.40- 7	Motordeckel engine cowl	1	-	-
08-27.40- 8	Schaltstange switching bar	1	1	1
08-27.40- 9	Druckfeder pressure spring	1	1	1
08-27.40-12	Auslösegriff release handle	1	1	1
08-27.40-20	Profilteil profile plate	1	-	1
08-27.40-25	Griff handle	1	-	-
08-27.40-30	Achse shaft	1	-	1
08-27.40-34	Abdeckplatte plate	1	1	1
08-27.40-40	Hülse sleeve	2	2	2
08-27.40-41	Druckstift pressure pin	2	2	2
08-27.40-42	Druckfeder pressure spring	2	2	2
08-27.40-43	Drahtauslösernippel, rot ausgelegt wire release nipple, red covered	1	1	1
08-27.40-43	Drahtauslösernippel wire release nipple	1	1	1
08-27.40-44	Anschlagring für Einzelbildschaltung flange ring for single-frame exposure	1	1	1
08-27.40-49	Druckknopf press button	1	-	-
08-27.40-50	Buchse bush	1	-	-
08-27.40-51	Druckfeder pressure spring	1	-	-
08-27.40-52	Druckstück pressure piece	1	-	-
08-27.40-66	Befestigungsschraube / screw	1	1	1
08-27.40-68	Sicherungsscheibe retaining washer	1	1	1
15-11.33-5	Mutter / nut	1	1	1
15-12.04-8/7	Unterlegscheibe washer	1	1	1
10 x 4,2 x 0,4	Tellerfeder cup spring	7	-	-
1,5 m 6 x 14 DIN7	Zylinderstift, brüniert cylindrical pin, burnished	1	-	1
1,4 x 3 DIN 1477	Senkkerbnagel, verchromt countersunk rivet, chrome-plated	2	2	2
1 x 12 DIN 1481	Spannstift, brüniert tension pin, burnished	1	1	1
2,3 DIN 6799	Sicherungsscheibe retaining washer	1	1	1

TECHNISCHER KUNDENDIENST

15. 3.65

Ernst Leitz GmbH Wetzlar	LEICINA 8s ohne / without Prüf... Prüf 15	Blatt / Sheet 1.1

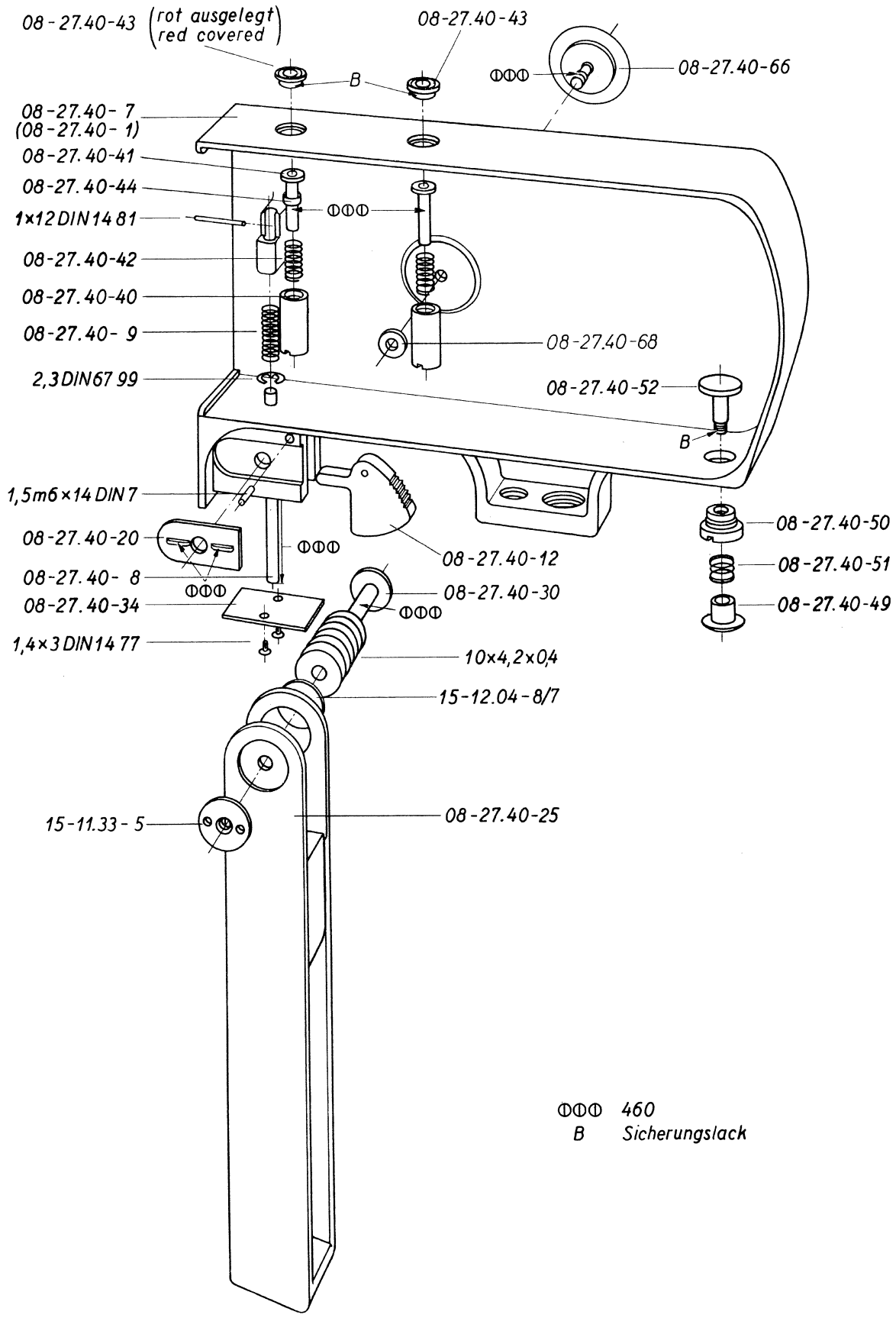

15. 3. 65

Ernst Leitz GmbH Wetzlar	LEICINA 8S Prüf 15...	Blatt Sheet 2.2		
Bestell-Nr Part-No	Benennung Description	Leicina-Modell 8 S	8 V	8 SV
08-27.20-100	Spulendeckel mit Typenschild „Leicina" spool cover with name plate	1	1	1
08-27.20-102	Riegelknopf locking knob	1	1	1
08-27.20-103	Griffstück handle piece	1	1	1
08-27.20-104	Riegel bar	1	1	1
08-27.20-105	Federscheibe spring washer	1	1	1
08-27.20-107	Zylinderstift cylindrical pin	1	1	1
08-27.200-060	Augenmuschel cup of the eyepiece	1	1	1
08-55.20- 1	Spulendeckel, komp1. (nur für Leicina 8 V) spool cover, compl. (for Leicina 8 V only)	-	1	-
M1,4 x 2,5 DIN 63	Senkschraube, brüniert countersunk screw, burnished	2	2	2
M1,7 x 2,5 DIN 551	Gewindestift, brüniert grub screw, burnished	3	3	3
M 2 x 3 DIN 551	Gewindestift, brüniert grub screw, burnished	1	1	1
M 2 x 6 DIN 551	Gewindestift, brüniert grub screw, burnished	2	2	2
M 2,6 x 4 DIN 551	Gewindestift, brüniert grub screw, burnished	1	1	1
15-12.06-40/4	Unterlegscheibe, brüniert washer, burnished	1	1	1
15-12.06-14/10	Unterlegscheibe washer	1	1	1
1 m 6 x 8 DIN 7	Zylinderstift, brüniert cylindrical pin, burnished	1	1	1
1 m 6 x 10 DIN 7	Zylinderstift, brüniert cylindrical pin, burnished	1	1	1
1,6 DIN 6799	Sicherungsscheibe retaining washer	2	2	2

Blatt Sheet 2.2	LEICINA 8S Prüf 15...	Ernst Leitz GmbH Wetzlar		
Bestell-Nr Part-No	Benennung Description	Leicina-Modell 8S	8 V	9 SV
08-27.20- 16	Typenschild "Leicina" name plate	1	1	1
08-27.20- 23	Dichtungswinkel, bei Bedarf light shield, when needed	1	1	1
08-27.20- 26	Maskenrohr, kompl. graduated dial tube, compl.	1	-	-
08-27.20- 27	Maskenrohr graduated dial tube	1	1	-
08-27.20- 28	Vorschraubring retaining ring	1	1	1
08-27.20- 30	Hülse sleeve	1	1	1
08-27.20- 31	Linse lens	1	1	1
08-27.20- 34	Nullinse zero lens	1	1	1
08-27.20- 35	Abstandsring, bei Bedarf distance ring, when needed	1	-	-
08-27.20- 36	Vorschraubring retaining ring	1	1	1
08-27.20- 39	Maskenscheibe graduated dial	1	1	-
08-27.20- 45	Filmuhr, kompl. mit Rolle, Drehfeder und Zylinderstifte film counter, compl. with roll, spring and cylindrical pins	1	1	1
08-27.20- 52	Rolle roll	1	1	1
08-27.20- 53	Drehfeder spring	1	1	1
08-27.20- 62	Haltering retaining ring	1	1	1
08-27.20- 65	Okular, kompl. ohne Augenmuschel und Haltering eyepiece, compl. without cup of the eyepiece and retaining ring	1	1	1
08-27.20- 66	Okularrohr eyepiece tube	1	1	1
08-27.20- 67	Linse lens	1	1	1
08-27.20- 70	Hülse sleeve	1	1	1
08-27.20- 71	Linse lens	1	1	1
08-27.20- 72	Vorschraubring retaining ring	1	1	1
08-27.20- 73	Bremsnippel brake nipple	1	1	1
08-27.20- 85	Stirnstütze head rest	1	1	1
08-27.20- 87	Druckfeder pressure spring	3	3	3
08-27.20- 89	Nummernschild, bei Bestellung Fabrikations-Nr. angeben number plate, when ordering this part the serial number must be staded	1	1	1
08-27.20- 90	Scheibe disc	2	2	2
08-27.20- 99	Spulendeckel, kompl. mit allen auf diesem Blatt dargestellten Teilen spool cover, compl. with all parts shown on this sheet	1	-	-

TECHNISCHER KUNDENDIENST

30. 9.65

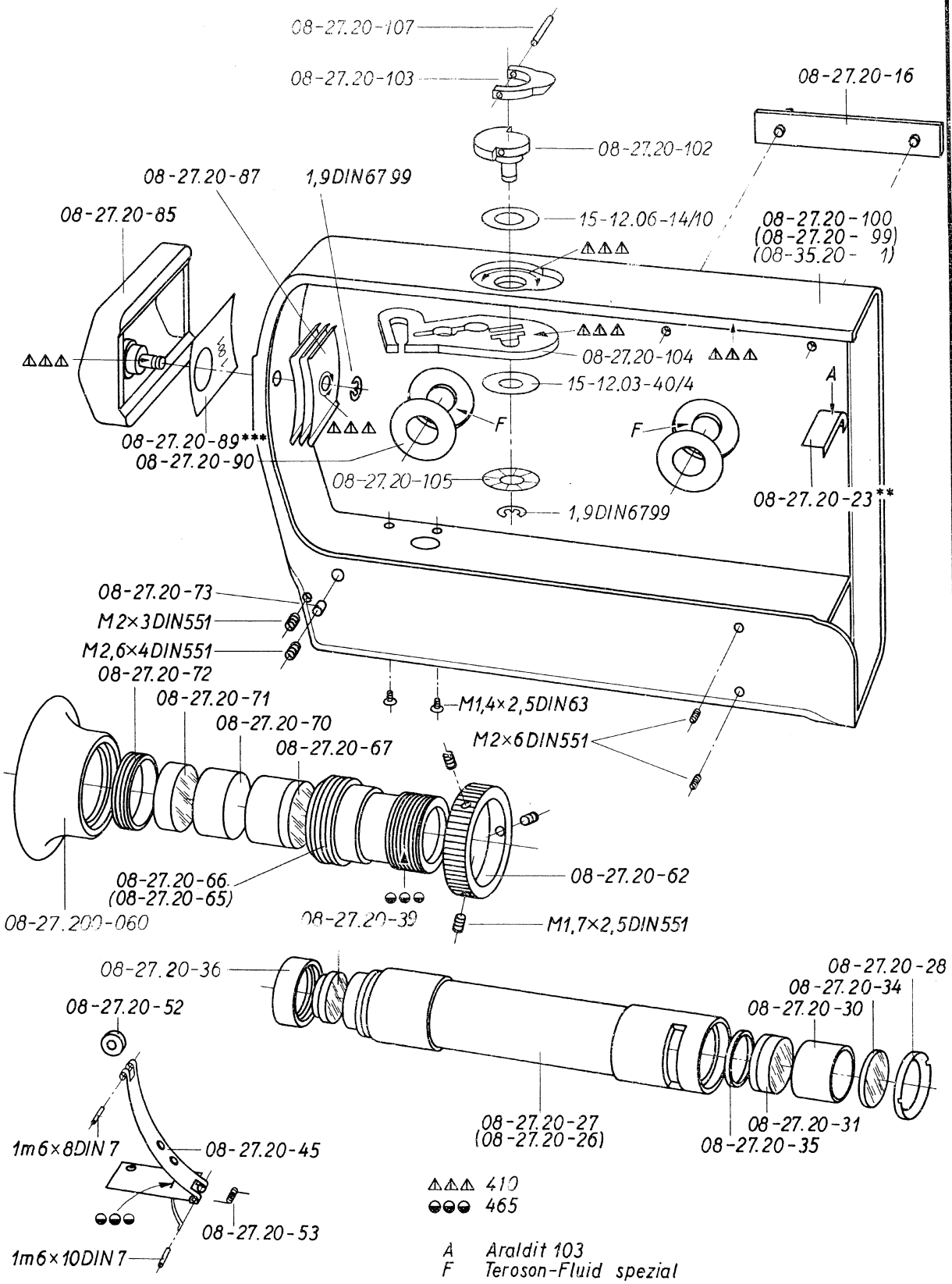

△△△ 410
◒◒◒ 465

A Araldit 103
F Teroson-Fluid spezial

* siehe Reparaturanleitung, Blatt 13
see servicing instruction, sheet 13

** siehe Reparaturanleitung, Blatt 51
see servicing instruction, sheet 51

*** bei Bestellung Kamera-Nummer angeben
when ordered this part, the number of the camera must be stated

Krü/Sa

TECHNISCHER KUNDENDIENST

30. 9. 65

Ernst Leitz GmbH Wetzlar	LEICINA 8S ohne without Prüf... Prüf 14	Blatt Sheet 2.1		
Ersatzteil-Nr. Part-No.	Benennung Description	Leicina-Modell 8 S	8 V	8 SV
08-27.20-73	Verschlußring retaining ring	1	1	1
08-27.20-75	Bremsnippel brake nipple	1	1	1
08-27.20-85	Stirnstütze head rest	1	1	1
08-27.20-87	Druckfeder pressure spring	3	3	3
08-27.20-69	Nummernschild number plate	1	1	1
08-27.20-90	Scheibe disc	2	2	2
08-27.200-060	Augenmuschel cup of the eyepiece	1	1	1
M1,7 x 2,5 DIN 63	Senkschraube, brüniert countersunk screw, burnished	2	2	2
M1,7 x 2,5 DIN551	Gewindestift, brüniert grub screw, burnished	3	3	3
M1,7 x 2,5 DIN921	Linsenschraube, brüniert oval head screw, burnished	1	-	-
M 2 x 3 DIN 551	Gewindestift, brüniert grub screw, burnished	1	1	1
M 2 x 6 DIN 551	Gewindestift, brüniert grub screw, burnished	2	2	2
M 2,5 x 4 DIN 551	Gewindestift, brüniert grub screw, burnished	1	1	1
15-12.06-70/5	Unterlegscheibe washer	1	-	-
15-12.06-35/1	Unterlegscheibe washer	2	-	-
1 m 6 x 8 DIN 7	Zylinderstift, brüniert cylindrical pin, burnished	1	1	1
1 m 6 x 10 DIN 7	Zylinderstift, brüniert cylindrical pin, burnished	1	1	1
1,9 DIN 6799	Sicherungsscheibe retaining washer	1	2	2

Blatt Sheet 2.1	LEICINA 8S ohne without Prüf... Prüf 14	Ernst Leitz GmbH Wetzlar		
Bestell-Nr Part-No	Benennung Description	Leicina-Modell 8 S	8 V	8 SV
08-27.20- 1	Spulendeckel, kompl. spool cover, compl.	1	-	-
08-27.20- 7	Spulendeckel spool cover	1	-	-
08-27.20- 9	Riegel, kompl. mit Andruckfeder bar. compl. with lifting spring	1	-	-
08-27.20-13	Knopfachse toggle shaft	1	-	-
08-27.20-14	Griffteil handle	1	-	-
08-27.20-16	Typenschild "Leicina" name plate	1	1	1
08-27.20-19	Hülse sleeve	1	-	-
08-27.20-20	Anschlagpuffer stop buffer	1	-	-
08-27.20-21	Puffer buffer	1	-	-
08-27.20-23	Dichtungswinkel, bei Bedarf light shield, when needed	1	1	1
08-27.20-26	Maskenrohr, kompl. graduated dial tube, compl.	1	-	-
08-27.20-27	Maskenrohr graduated dial tube	1	1	-
08-27.20-28	Vorschraubring retaining ring	1	1	1
08-27.20-30	Hülse sleeve	1	1	1
08-27.20-31	Linse lens	1	1	1
08-27.20-34	Nullinse zero lens	1	1	1
08-27.20-35	Abstandsring, bei Bedarf distance ring, when needed	1	-	-
08-27.20-36	Vorschraubring retaining ring	1	1	1
08-27.20-39	Maskenscheibe graduated dial	1	1	-
08-27.20-45	Filmuhr, kompl. mit Rolle, Drehfeder und Zylinderstifte film counter, compl. with roll, spring and cylindrical pins	1	1	1
08-27.20-52	Rolle roll	1	1	1
08-27.20-53	Drehfeder spring	1	1	1
08-27.20-62	Haltering retaining ring	1	1	1
08-27.20-65	Okular, kompl. ohne Augenmuschel und Haltering eyepiece, compl. without cup of the eyepiece and retaining ring	1	1	1
08-27.20-66	Okularrohr eyepiece tube	1	1	1
08-27.20-67	Linse lens	1	1	1
08-27.20-70	Hülse sleeve	1	1	1
08-27.20-71	Linse lens	1	1	1

TECHNISCHER KUNDENDIENST

10.9.65

Ernst Leitz GmbH Wetzlar	LEICINA 8S ohne / without Prüf... Prüf 14	Blatt / Sheet 2.1

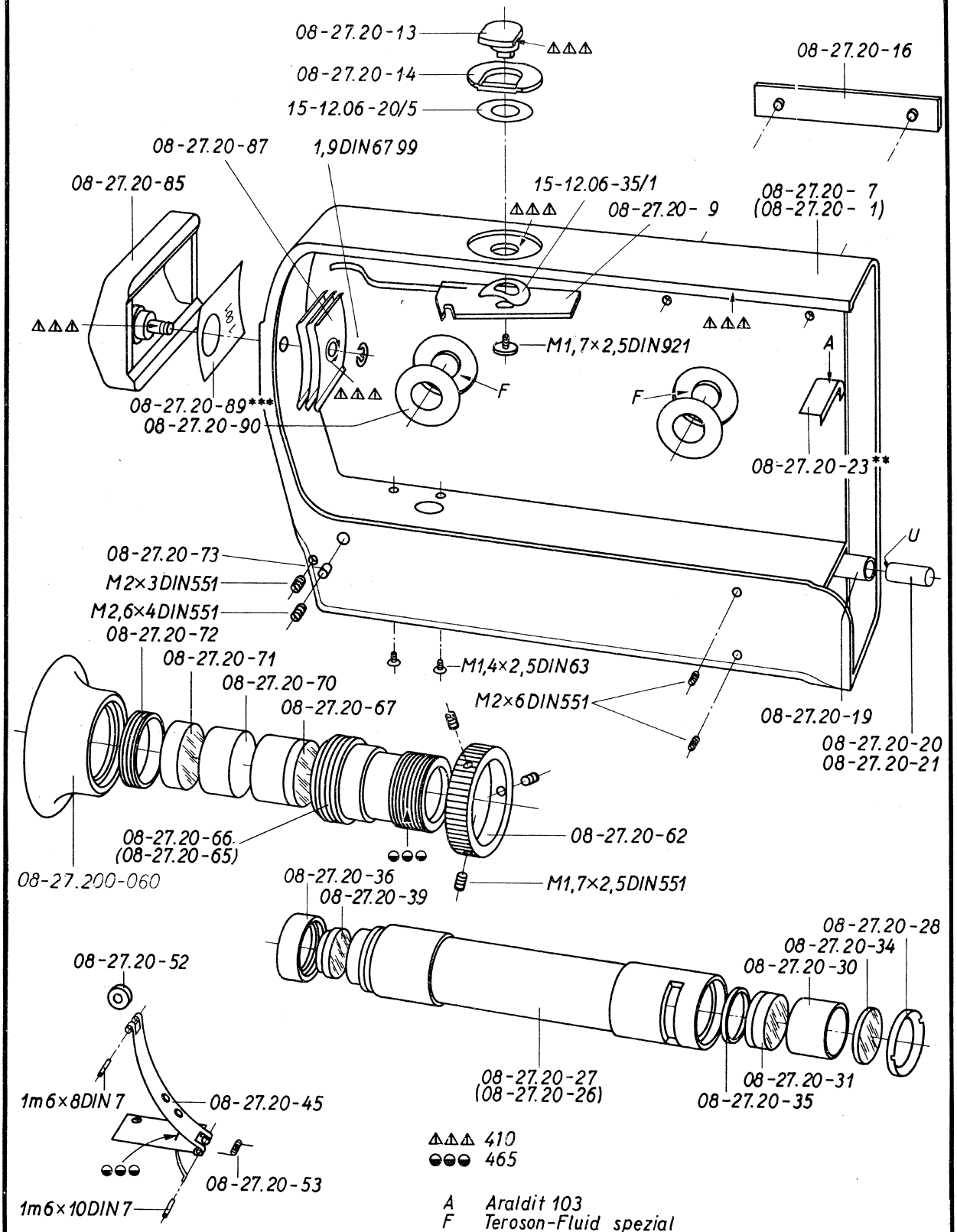

△△△ 410
◒◒◒ 465

A Araldit 103
F Teroson-Fluid spezial
U UHU-hart

* siehe Reparaturanleitung, Blatt 13
see servicing instruction, sheet 13

** siehe Reparaturanleitung, Blatt 51
see servicing instruction, sheet 51

*** bei Bestellung Kamera-Nummer angeben
when ordered this part, the number of the camera must be stated

30. 9. 65

3.3	LEICINA 8s Prüf 15...	Leitz WETZLAR		
	Benennung Description	Leicina-Modell		
		8 S	8 V	8 SV
[illegible]0-37	Batteriehalter battery holder	1	1	1
[illegible].10-45	Batterieknopf battery knob	1	1	1
[illegible]4-27.10-48	Halter mit Fotowiderstand (dunkel lagern) holder with photoresistance (store in a dark place)	1	-	1
08-27.10-[illegible]	Anschlagschraube stop screw	1	-	-
08-27.10-121	Beilage, 0.1 mm dick, nach Bedarf spacer, 0.1 mm thick, when needed		-	
08-27.10-125	Lötleiste soldering ledge	1	-	-
08-27.10-132	Schaftschraube shank screw	1	-	-
08-27.10-157	Steckerteil, kompl. mit Kontaktfedern, Steckerteil und Isolierplatte plug piece, compl. with contact springs, plug part and insulation plate	1	1	1
08-27.10-158	Steckerteil plug part	1	1	1
08-27.10-[illegible]	Kontaktfeder contact spring	6	6	6
08-27.10-[illegible]	Isolierplatte insulation plate	1	1	1
08-27.100-02[illegible]	Druckknopf / pressure knob	1	-	-
08-27.100-[illegible]	Riegel / locking clamp	1	-	-
08-27.100-04[illegible]	Grundobjektiv mit Prismenfassung built-in lens with prism mounting	1	-	-
08-27.100-0[illegible]	Prismenfassung mit Prismen prism mounting with prism	1	-	-
08-27.100-051	Rastetück, außen / outer rest piece	1	-	-
08-27.100-055	Rastetück, innen / inner rest piece	1	-	-
08-27.100-058	Zugfeder tension spring	1	-	-
08-27.100-059	Vorschraubring retaining ring	1	-	-
08-27.10 E5	Kabelbaum, kompl. mit Isolierschlauch und Widerstand R 2 cable duct, compl. with insulating spaghetti and resistance R 2	1	-	-
08-28.10-15	Stehbolzen bolt	1	1	1
305-24.28-01	Blendenmeßwerk diaphragm autonatic	1	-	-
M 1,4x4 DIN 84 Ms	Zylinderschraube cylindrical head screw	2	-	2
M 1,4 x 6 DIN 84	Zylinderschraube, brüniert cylindrical head screw, burnished	2	2	2
M 2 x 2,5 DIN 84	Zylinderschraube, brüniert cylindrical head screw, burnished	1	-	-
M 2 x 3,5 DIN 84Ms	Zylinderschraube cylindrical head screw	2	-	-
M 1,4 DIN 546 Ms	Schlitzmutter, gebeizt slotted nut, corroded	2	2	2
M 2 x 4,5 LN 120 19 Ms	Zylinderschraube, brüniert cylindrical head screw, burnished	1	-	-
M 3 x 6,5 LN 120 19 Ms	Zylinderschraube cylindrical head screw	3	-	-

TECHNISCHER KUNDENDIENST

30. 9. 65

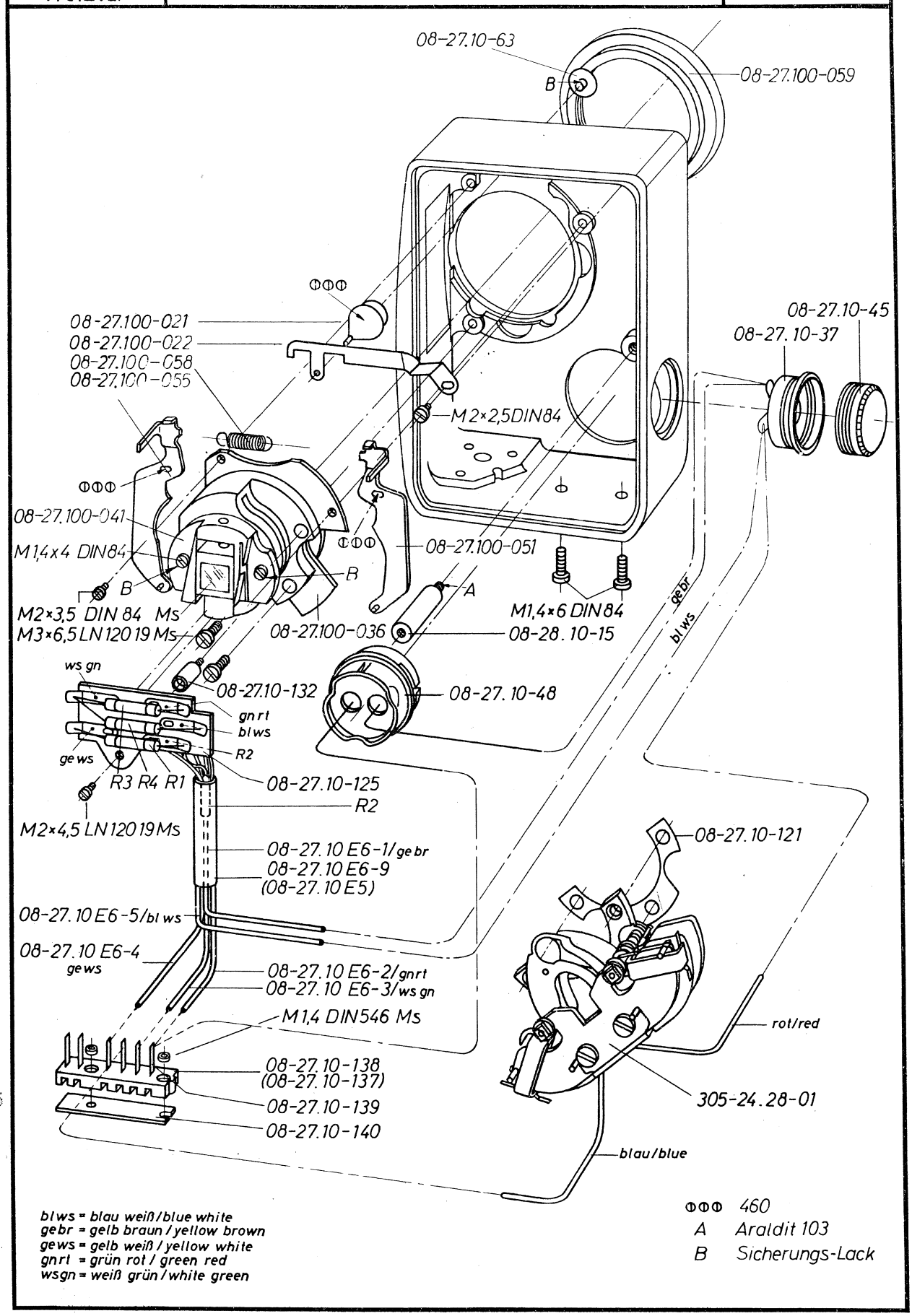

TECHNISCHER KUNDENDIENST

30. 9.65

Blatt Sheet 3.2	LEICINA 8s Prüf 15 ...	Leitz WETZLAR		
Bestell-Nr Part-No	Benennung Description	Leicina-Modell 8 S	8 V	8 SV
08-27.10- 37	Batteriehalter battery holder	1	1	1
08-27.10- 45	Batterieknopf battery knob	1	1	1
08-27.10- 48	Halter mit Fotowiderstand (dunkel lagern) holder with photoresistance (store in a dark place)	1	-	1
08-27.10- 60	Druckknopf pressure knob	1	-	-
08-27.10- 61	Riegel locking clamp	1	-	-
08-27.10- 63	Anschlagschraube stop screw	1	-	-
08-27.10- 80	Feder spring	1	-	-
08-27.10-121	Beilage, 0,1 mm dick, nach Bedarf spacer, 0.1 mm thick, when needed		-	
08-27.10-125	Lötleiste soldering ledge	1	-	-
08-27.10-132	Schaftschraube shank screw	1	-	-
08-27.10-137	Steckdose, kompl. mit Kontaktfedern, Steckerteil und Isolierplatte plug ledge, compl. with contact springs, plug part and insulation plate	1	1	1
08-27.10-138	Steckerteil plug part	1	1	1
08-27.10-139	Kontaktfeder contact spring	6	6	6
08-27.10-140	Isolierplatte insulation plate	1	1	1
08-27.10.170	Grundobjektiv built-in lens	1	-	-
08-27.10-174	Raststück, außen, mit Stift outer rest piece with pin	1	-	-
08-27.10-178	Raststück, innen, mit Stift outer rest piece with pin	1	-	-
08-27.10 E5	Kabelbaum, kompl. mit Isolierschlauch und Widerstand R 2 cable duct, compl. with insulating spaghetti and resistance R 2	1	-	-
08-28.10- 15	Stehbolzen bolt	1	1	1
305-24.28-01	Blendenmeßwerk diaphragm automatic	1	-	-
M1,4 x 2 DIN 84	Zylinderschraube, brüniert, bei Bedarf cylindrical head screw, burnished, when needed	1	-	-
M1,4 x 6 DIN 84	Zylinderschraube, brüniert cylindrical head screw, burnished	2	2	2
M 2 x 2,5 DIN 84	Zylinderschraube, brüniert cylindrical head screw, burnished	1	-	-
M1,4 DIN 546 Ms	Schlitzmutter, gebeizt slotted nut, corroded	2	2	2
M2x3,5 LN 120 19 Ms	Zylinderschraube cylindrical head screw	2	-	-
M2x4,5 LN 120 19 Ms	Zylinderschraube, brüniert cylindrical head screw, burnished	1	-	-
M3x6,5 LN 120 19 Ms	Zylinderschraube cylindrical head screw	3	-	-
RL 3220 b / 2.5	Lötöse, bei Bedarf soldering eye, when needed	1	-	-

TECHNISCHER KUNDENDIENST

15. 3.65

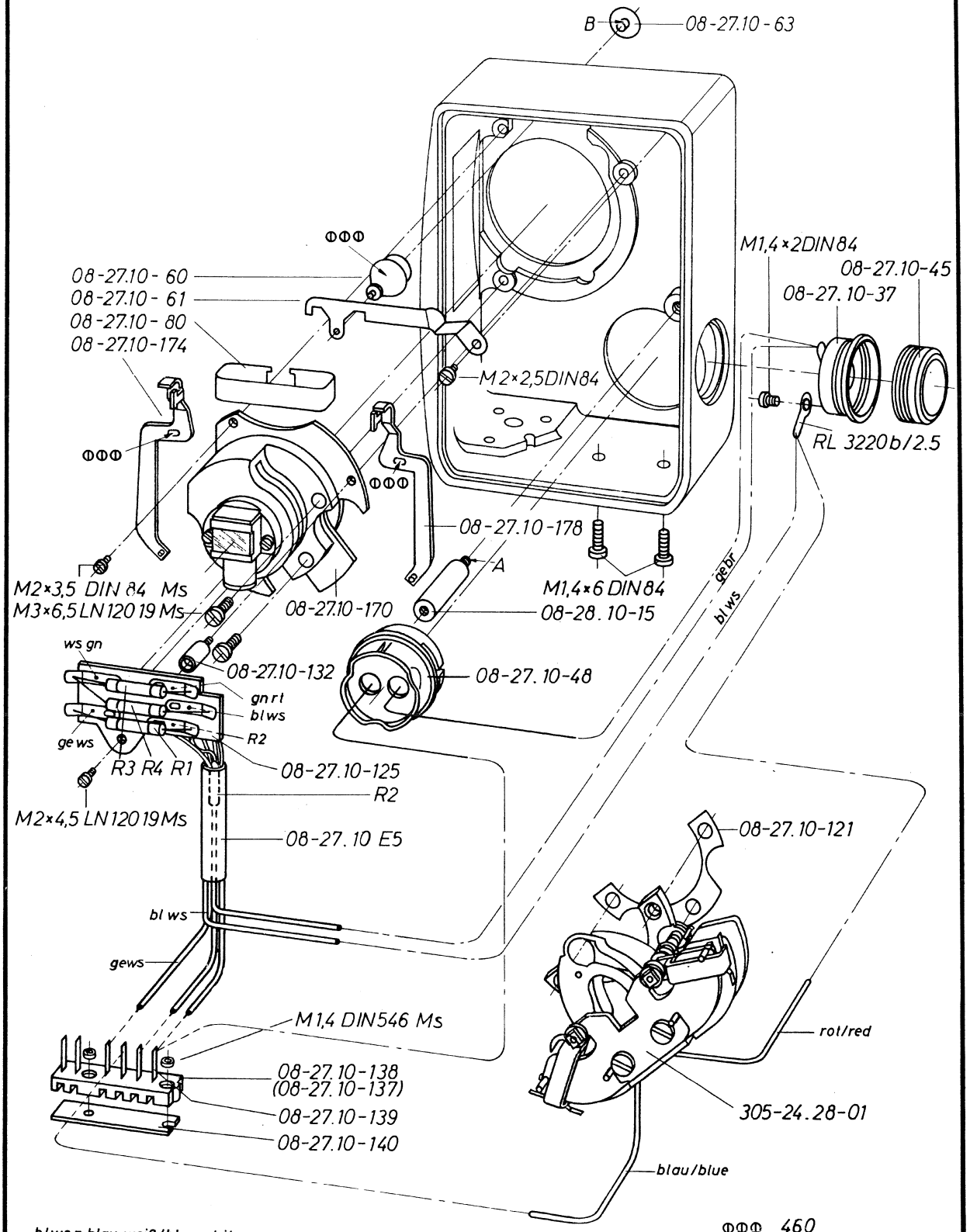

TECHNISCHER KUNDENDIENST

15. 3.65

blws = blau weiß/blue white
gebr = gelb braun/yellow brown
gews = gelb weiß/yellow white
gnrt = grün rot/green red
wsgn = weiß grün/white green

* siehe Reparaturanleitung, Blatt 24
see servicing instruction, sheet 24

ΦΦΦ 460
A Araldit 103
B Sicherungs-Lack

Ernst Leitz GmbH Wetzlar	LEICINA 8S ohne / without Prüf... Prüf 14	Blatt / Sheet 3.1		
Bestell-Nr / Part-No	Benennung / Description	Leicina-Modell 8 S	8 V	8 SV
M2 x 3,5 DIN 84 Ms	Zylinderschraube / cylindrical head screw	2	-	-
M2x4,5 LN 120 19Ms	Zylinderschraube, brünniert / cylindrical head screw, burnished	1	-	-
M2x6,5 LN 120 19Ms	Zylinderschraube / cylindrical head screw	1	-	-
RL 3220 b / 2.5	Lötöse, bei Bedarf / soldering eye, when needed	1	-	-

Blatt Sheet 3.1	LEICINA 8S ohne without Prüf... Prüf 14	Ernst Leitz GmbH Wetzlar		
Bestell-Nr Part-No	Benennung Description	Leicina-Modell 8 S	8 V	8 SV
08-27.10- 37	Batteriehalter battery holder	1	1	1
08-27.10- 45	Batterieknopf battery knob	1	1	1
08-27.10- 49	Halter mit Fotowiderstand (dunkel lagern) holder with photoresistance (store in a dark place)	1	-	1
08-27.10- 60	Druckknopf pressure knob	1	-	-
08-27.10- 61	Riegel locking clamp	1	-	-
08-27.10- 65	Anschlagschraube stop screw	1	-	-
08-27.10- 78	Raststück, außen outer rest piece	1	-	-
08-27.10- 79	Raststück, innen inner rest piece	1	-	-
08-27.10- 80	Feder spring	1	-	-
08-27.10- 82	Grundobjektiv built-in lens	1	-	-
08-27.10-121	Beilage, 0,1 mm dick, nach Bedarf spacer, 0.1 mm thick, when needed		-	-
08-27.10-125	Lötleiste soldering ledge	1	-	-
08-27.10-132	Schaftschraube shank screw	1	-	-
08-27.10-137	Steckdose, kompl. mit Kontaktfedern und Steckerteil plug ledge, compl. with contact springs and plug part	1	1	1
08-27.10-138	Steckerteil plug part	1	1	1
08-27.10-139	Kontaktfeder contact spring	6	6	6
08-27.10-140	Isolierplatte insulation plate	1	1	1
08-27.10 E5	Kabelbaum, kompl. mit Isolierschlauch und Widerstand R 2 cable duct, compl. with insulating spaghetti und resistance R 2	1	-	-
08-28.10- 15	Stehbolzen bolt	1	1	1
305-24.28-01	Blendenmeßwerk diaphragm automatic	1	-	-
M1,4 x 2 DIN 84	Zylinderschraube, brüniert, bei Bedarf cylindrical head screw, burnished, when needed	1	-	-
M1,4 x 6 DIN 84	Zylinderschraube, brüniert cylindrical head screw, burnished	2	2	2
M 1,4 DIN 546 Ms	Schlitzmutter, brüniert slotted nut, burnished	2	2	2
M 2 x 2,5 DIN 84	Zylinderschraube, brüniert cylindrical head screw, burnished	1	-	-

TECHNISCHER KUNDENDIENST

15. 3.65

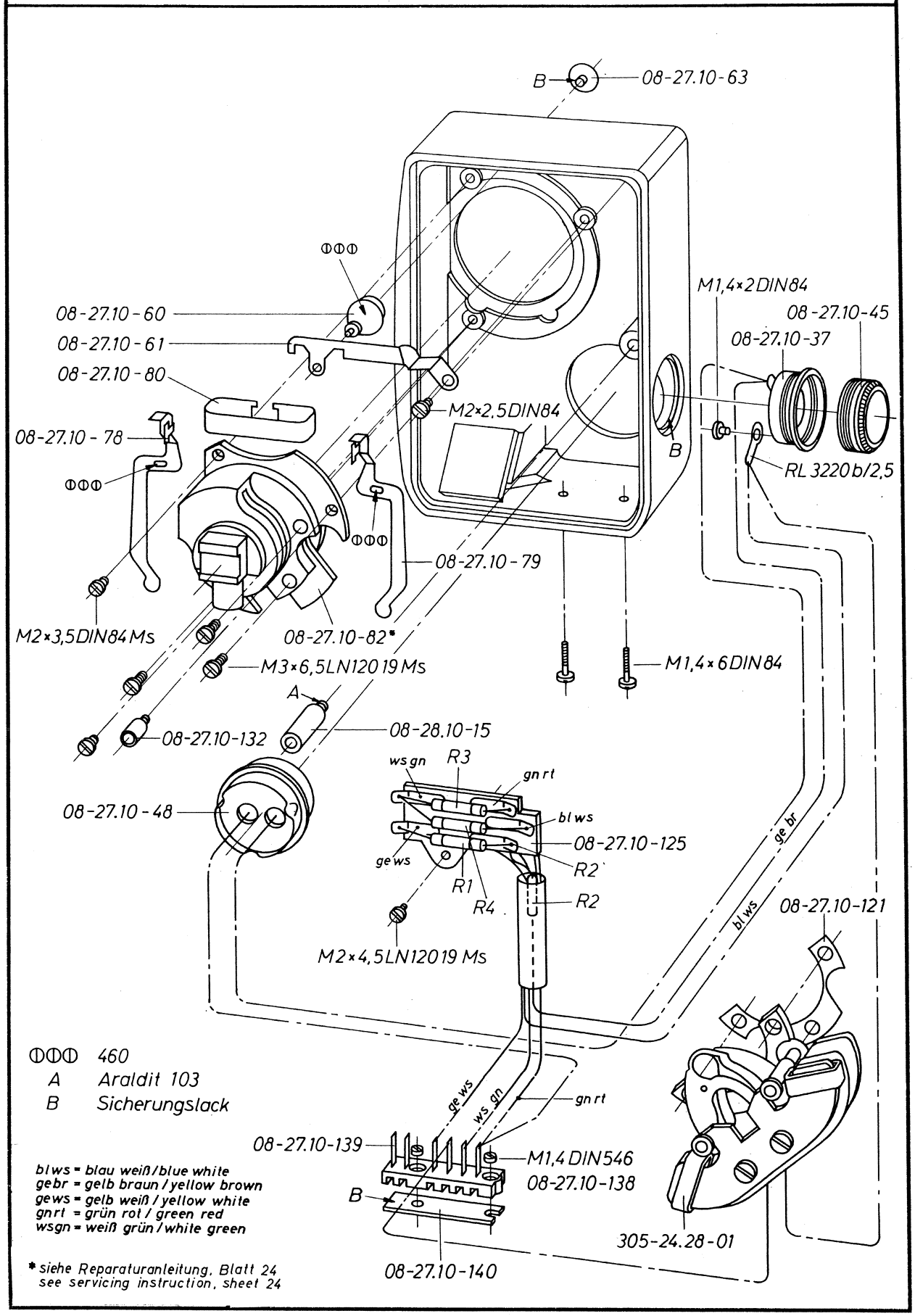

ΦΦΦ 460
A Araldit 103
B Sicherungslack

15. 3.65

bl ws = blau weiß / blue white
ge br = gelb braun / yellow brown
ge ws = gelb weiß / yellow white
gn rt = grün rot / green red
ws gn = weiß grün / white green

* siehe Reparaturanleitung, Blatt 24
see servicing instruction, sheet 24

Blatt Sheet 4.2

LEICINA 8S Prüf 17...

Leitz WETZLAR

Bestell-Nr Part-No	Benennung Description	Leicina-Modell 8 S	8 V	8 SV
08-27.10-10	Beleuchtungsoptik, kompl. (alle Teile vor der Frontplatte) illuminating optics, compl. (all parts in front of the front plate)	1	1	1
08-27.10-11	Innenteil inner part	1	-	-
08-27.10-12	Lamelle leaf	6	-	-
08-27.10-16	Steuerring diaphragm leaf guide ring	1	-	-
08-27.10-20	Drahtring wire ring	1	-	-
08-27.10-22	Augenlinse eyelens	1	-	-
08-27.10-23	Vorschraubring retaining ring	1	-	-
08-27.10-26	Gegenring counterring	1	-	-
08-27.10-27	Rändelring knurled ring	1	-	-
08-27.10-29	DIN-Ring DIN-ring	1	-	-
08-27.10-31	Rastfeder spring catch	1	-	-
08-27.10-34	Haltering retaining ring	1	-	1
08-27.10-64	Spiegelstuhl, kompl. mit Spiegel mirror support, compl. with mirror	1	-	1
08-27.10-67	Spiegel mirror	1	-	1
08-27.10-68	Spiegelstuhl mirror support	1	-	1
08-27.10-71	Kegel-Druckfeder pressure spring	1	-	1
08-27.10-73	Kalotte calotte	1	-	1
08-27.10-75	Abdeckblech cover plate	1	-	1
08-27.100-006*	Frontplatte front plate	1	-	-
M 2,6 x 5 DIN 553	Gewindestift, brüniert grub screw, burnished	3	-	3
15-10.20 -8	Zylinderkopfschraube, brüniert cylindrical head cap screw, burnished	1	-	1
15-10.264-8	Senkschraube, gebeizt countersunk screw, corroded	1	-	1
15-12.20-8/1	Scheibe washer	1	-	1
15-12.21-5/1	Federscheibe spring disk	1	-	1
2 Ø III DIN 5401	Kugel 2 Ø mm ball 2 Ø mm	1	-	-

* bei Bestellung bitte Fabrikations-Nummer angeben
when ordering this part the serial number must be stated

TECHNISCHER KUNDENDIENST

30. 9.65

Ernst Leitz GmbH Wetzlar	LEICINA 8s Prüf 17...	Blatt Sheet 4.2

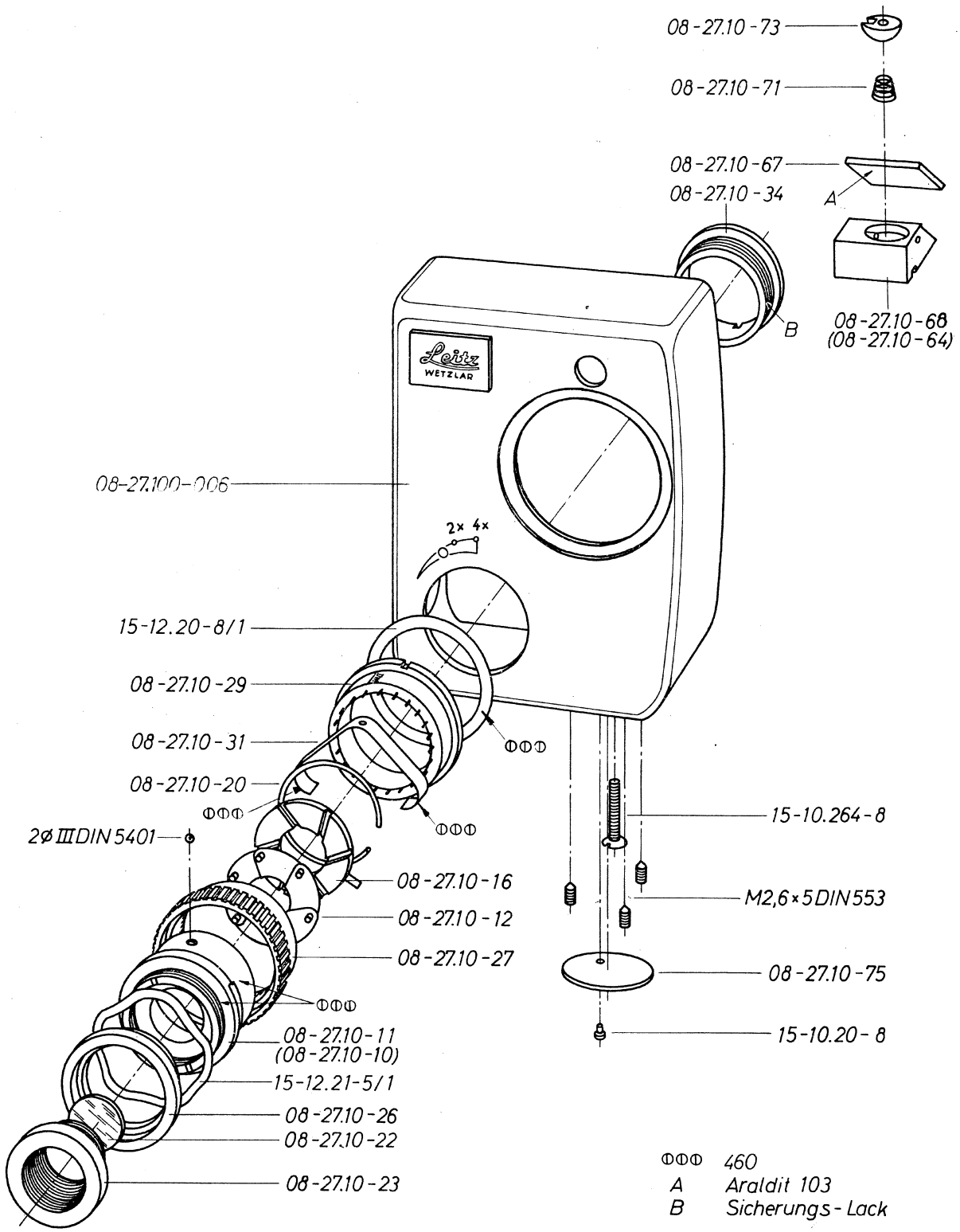

ΦΦΦ 460
A Araldit 103
B Sicherungs-Lack

TECHNISCHER KUNDENDIENST

30.9.65

Krü/Sa

Blatt Sheet 4.1	LEICINA 8S ohne without Prüf...	Ernst Leitz GmbH Wetzlar		
Bestell-Nr Part-No	Benennung Description	Leicina-Modell 8 S	8 V	8 SV
08-27.10- 6 *	Frontplatte front plate	1	-	-
08-27.10-10	Beleuchtungsoptik, kompl. (alle Teile vor der Frontplatte) illuminating optics, compl. (all parts in front of the front plate)	1	1	1
08-27.10-11	Innenteil inner part	1	-	-
08-27.10-12	Lamelle leaf	6	-	-
08-27.10-16	Steuerring diaphragm leaf guide ring	1	-	-
08-27.10-20	Drahtring wire ring	1	-	-
08-27.10-22	Augenlinse eyelens	1	-	-
08-27.10-23	Vorschraubring retaining ring	1	-	-
08-27.10-26	Gegenring counterring	1	-	-
08-27.10-27	Rändelring knurled ring	1	-	-
08-27.10-29	DIN-Ring DIN-ring	1	-	-
08-27.10-31	Rastfeder spring catch	1	-	-
08-27.10-34	Haltering retaining ring	1	-	1
08-27.10-64	Spiegelstuhl, kompl. mit Spiegel mirror support, compl. with mirror	1	-	1
08-27.10-67	Spiegel mirror	1	-	1
08-27.10-68	Spiegelstuhl mirror support	1	-	1
08-27.10-71	Kegel-Druckfeder pressure spring	1	-	1
08-27.10-73	Kalotte calotte	1	-	1
08-27.10-75	Abdeckblech cover plate	1	-	1
M2,6 x 5 DIN 553	Gewindestift, brüniert grub screw, burnished	3	-	3
15-10.20 -8	Zylinderkopfschraube, brüniert cylindrical head cap screw, burnished	1	-	1
15-10.264-8	Senkschraube, gebeizt countersunk screw, corroded	1	-	1
15-12.20-8/1	Scheibe washer	1	-	1
15-12.21-5/1	Federscheibe spring disk	1	-	-
2 ø III DIN 5401	Kugel 2 ø mm ball 2 ø mm	1	-	-
*	bei Bestellung bitte Fabrikations-Nummer angeben when ordering this part the serial number must be stated			

TECHNISCHER KUNDENDIENST

30. 9.65

Ernst Leitz GmbH Wetzlar	LEICINA 8S ohne / without Prüf...	Blatt / Sheet 4.1

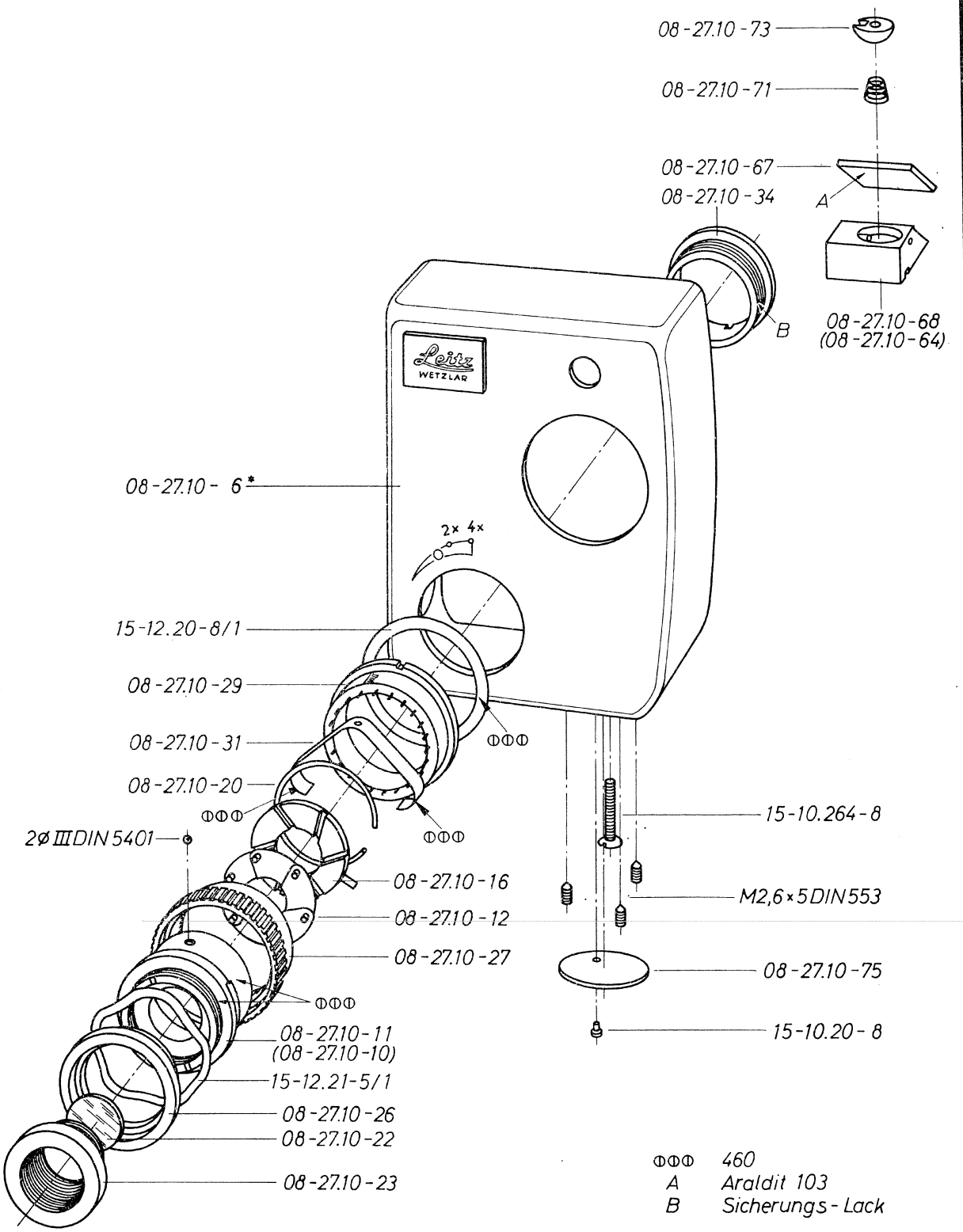

ΦΦΦ	460
A	Araldit 103
B	Sicherungs-Lack

* bei Bestellung bitte Fabrikations-Nummer angeben
when ordering this part the serial number must be stated

TECHNISCHER KUNDENDIENST

30. 9.65

Krü/Se

Leitz WETZLAR	LEICINA 8S Prüf 16 ...	Blatt Sheet 5.3		
Bestell-Nr Part-No	Benennung Description	Leicina-Modell 8 S	8 V	8 SV
15-12.03-32/7	Unterlegscheibe, 0,3 mm dick, bei Bedarf, gebeizt washer, 0.3 mm thick, when needed, corroded	1	1	1
15-12.03-32/8	Unterlegscheibe, 0,5 mm dick, bei Bedarf, gebeizt washer, 0.5 mm thick, when needed, corroded	1	1	1

Blatt Sheet 5.3	LEICINA 8S Prüf 16...	Leitz WETZLAR		
Bestell-Nr Part-No	Benennung Description	Leicina-Modell 8 S	8 V	8 SV
08-27.30- 60	Blendenlager, hinten bearing of the diaphragm shaft, behind	1	1	1
08-27.30- 64	Blendenlagerbuchse bush of the diaphragm shaft	1	1	1
08-27.30- 83	Greiferfeder claw spring	1	1	1
08-27.30- 84	Abdeckung guard plate	1	1	1
08-27.30-104	Blendenlager, vorn bearing of the diaphragm shaft, ahead	1	1	1
08-27.30-176	Plüschstreifen plush strip	1	1	1
08-27.30-177	Plüschstreifen plush strip	1	1	1
08-27.30-192	Abdeckblech protective cover	1	1	1
08-27.30-203	Hebel lever	1	1	1
08-27.30-208	Drehfeder tension spring	1	1	1
08-27.30-262	Abdeckfolie, selbstklebend corer foil, self-sealing	1	1	1
08-27.30-267	Platine plate	1	1	1
08-27.30-280	Blendenachse, Ø des Blendenritzels = 11,4 mm, nur in Verbindung mit 08-27.30-289 und 302-050.031-2 (siehe Blatt 7) diaphragm shaft, dia. mm of the diaphragm gear = 11.4, only together with 08-27.30-289 and 302-050.031-2 (see sheet 7)	1	1	1
08-27.300-124	Abdeckblech protective cover	1	-	-
M 3 x 6 DIN 63	Senkschraube, brüniert countersunk screw, burnished	1	1	1
M 1,7 x 2 DIN 84	Zylinderschraube, gebeizt cylindrical head screw, corroded	1	1	1
M 1,7 x 3 DIN 84	Zylinderschraube, brüniert cylindrical head screw, burnished	1	1	1
M 1,7 x 4 DIN 84	Zylinderschraube, brüniert cylindrical head screw, burnished	3	3	3
M 2,6 x 12 DIN 84	Zylinderschraube, brüniert cylindrical head screw, burnished	2	2	2
M 3 x 6 DIN 84	Zylinderschraube, brüniert cylindrical head screw, burnished	1	1	1
M 2 x 4 DIN 551	Gewindestift, brüniert grub screw, burnished	1	1	1
M 2,6 x 15 DIN 931	Sechskantschraube, gebeizt hexagon screw, corroded	1	1	1
1,5 x 5 DIN 1472	Paßkerbstift, brüniert notched dowel pin, burnished	4	4	4
1,5 x 10 DIN 1472	Paßkerbstift, brüniert notched dowel pin, burnished	2	4	4
1 x 5 DIN 1481	Spannstift split pin	1	1	1
M2,6x28 LN 120 19	Zylinderschraube, brüniert cylindrical head screw, burnished	2	2	2
M 3 x 28 LN 120 19	Zylinderschraube, brüniert, bei Bedarf cylindrical head screw, burnished, when needed	2	2	-
15-12.03-32/6	Unterlegscheibe, 0,2 mm dick, bei Bedarf, gebeizt washer, 0.2 mm thick, when needed, corroded	1	1	1

TECHNISCHER KUNDENDIENST

15. 3.65

Ernst Leitz GmbH Wetzlar	LEICINA 8s Prüf 16 ...	Blatt Sheet 5.3

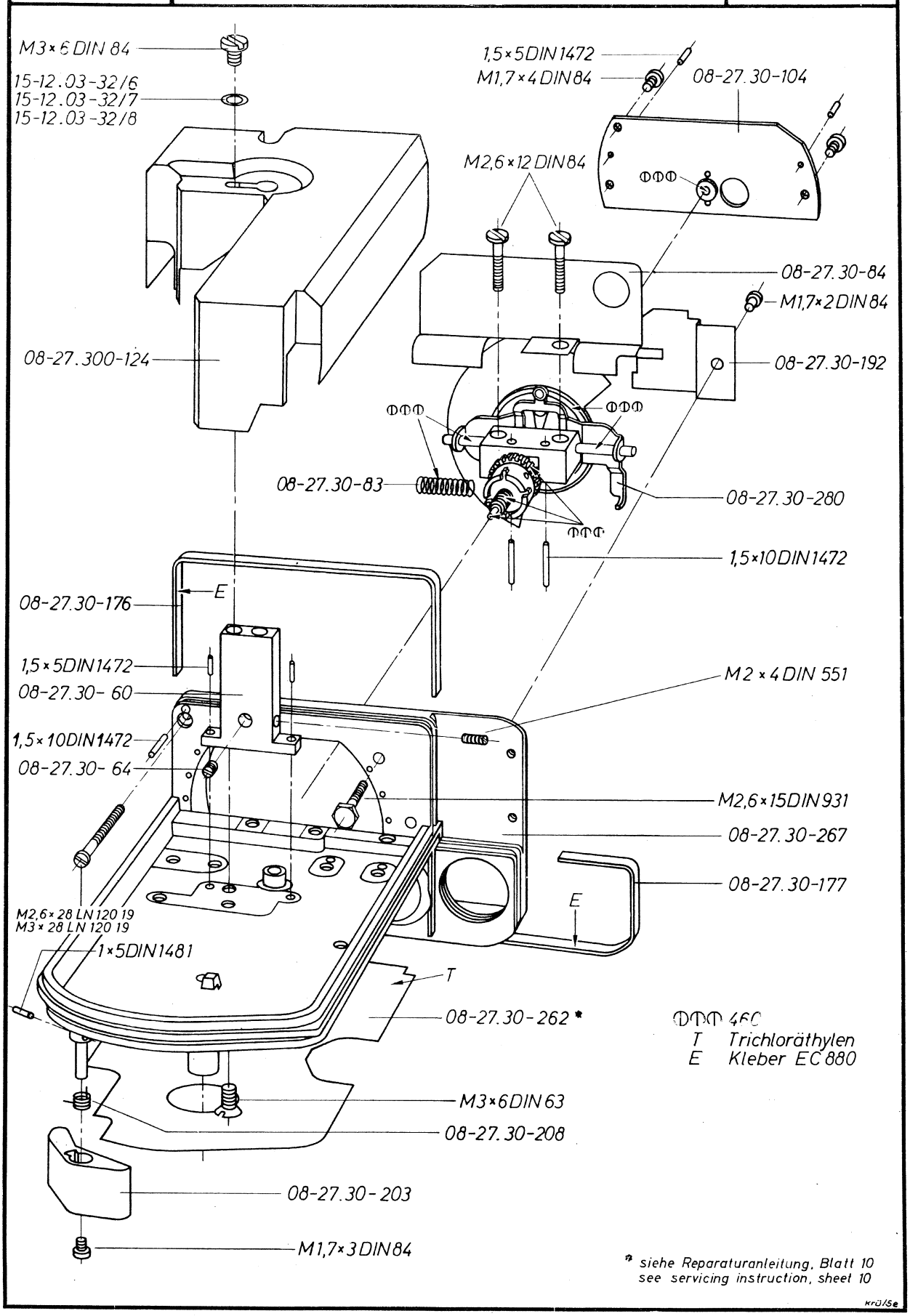

TECHNISCHER KUNDENDIENST

15. 3.65

Ernst Leitz GmbH Wetzlar	LEICINA 8S Prüf 15	Blatt Sheet 5.2		
Bestell-Nr. Part No.	Benennung Description	Leicina-Modell 8 S	8 V	8 SV
M 2,6 x 12 DIN 84	Zylinderschraube, brüniert cylindrical head screw, burnished	2	2	2
M 3 x 8 DIN 63	Senkschraube, brüniert countersunk screw, burnished	1	1	1
1,5 x 5 DIN 1472	Paßkerbstift, brüniert notched dowel pin, burnished	4	4	4
1,5 x 10 DIN 1472	Paßkerbstift, brüniert notched dowel pin, burnished	2	4	4
1 x 5 DIN 1481	Spannstift split pin	1	1	1
M 2,6 x 15 DIN 931	Sechskantschraube, gebeizt hexagon screw, corroded	1	1	1

Blatt Sheet 5.2	LEICINA 8S Prüf 15	Ernst Leitz GmbH Wetzlar		
Bestell-Nr Part-No	Benennung Description	Leicina-Modell 8 S	8 V	8 SV
08-27.30- 60	Blendenlager, hinten bearing of the diaphragm shaft, behind	1	1	1
08-27.30- 64	Blendenlagerbuchse bush of the diaphragm shaft	1	1	1
08-27.30- 69	Blendenachse, Ø des Blendenritzels = 11,1 mm, nur in Verbindung mit 08-27.30-121 und 302-050.031-1 (siehe Blatt 7) diaphragm shaft, dia. mm of the diaphragm gear = 11.1, only together with 08-27.30-121 and 302-050.031-1 (see sheet 7)	1	-	-
08-27.30- 83	Greiferfeder claw spring	1	1	1
08-27.30- 84	Abdeckung guard plate	1	1	1
08-27.30-104	Blendenlager, vorn bearing of the diaphragm shaft, ahead	1	1	1
08-27.30-176	Plüschstreifen plush strip			
08-27.30-177	Plüschstreifen plush strip	1	1	1
08-27.30-192	Abdeckblech protective cover	1	1	1
08-27.30-203	Hebel lever	1	1	1
08-27.30-208	Drehfeder tension spring	1	1	1
08-27.30-262	Abdeckfolie, selbstklebend corer foil, self-sealing	1	1	1
08-27.30-267	Platine plate	1	1	1
08-27.300-124	Abdeckblech protective cover	-	-	-
15-12.03-32/6	Unterlegscheibe, 0,2 mm dick, bei Bedarf, gebeizt washer, 0.2 mm thick, when needed, corroded	1	1	1
15-12.03-32/7	Unterlegscheibe, 0,3 mm dick, bei Bedarf, gebeizt washer, 0.3 mm thick, when needed, corroded	1	1	1
15-12.03-32/8	Unterlegscheibe, 0,5 mm dick, bei Bedarf, gebeizt washer, 0.5 mm thick, when needed, corroded	1	1	1
M1,7x2 DIN 84	Zylinderschraube, gebeizt cylindrical head screw, corroded	1	1	1
M 1,7 x 3 DIN 84	Zylinderschraube, brüniert cylindrical head screw, burnished	1	1	1
M 1,7 x 4 DIN 84	Zylinderschraube, brüniert cylindrical head screw, burnished	3	3	3
M 3 x 6 DIN 84	Zylinderschraube, brüniert cylindrical head screw, burnished	1	1	1
M 2 x 4 DIN 551	Gewindestift, brüniert grub screw, burnished	1	1	1
M2,6x28 LN 120 19	Zylinderschraube, brüniert cylindrical head screw, burnished	2	2	2
M 3 x 28 LN 120 19	Zylinderschraube, brüniert, bei Bedarf cylindrical head screw, burnished, when needed	2	2	2

TECHNISCHER KUNDENDIENST

15. 3.65

Ernst Leitz GmbH Wetzlar	LEICINA 8s Prüf 15	Blatt Sheet 5.2

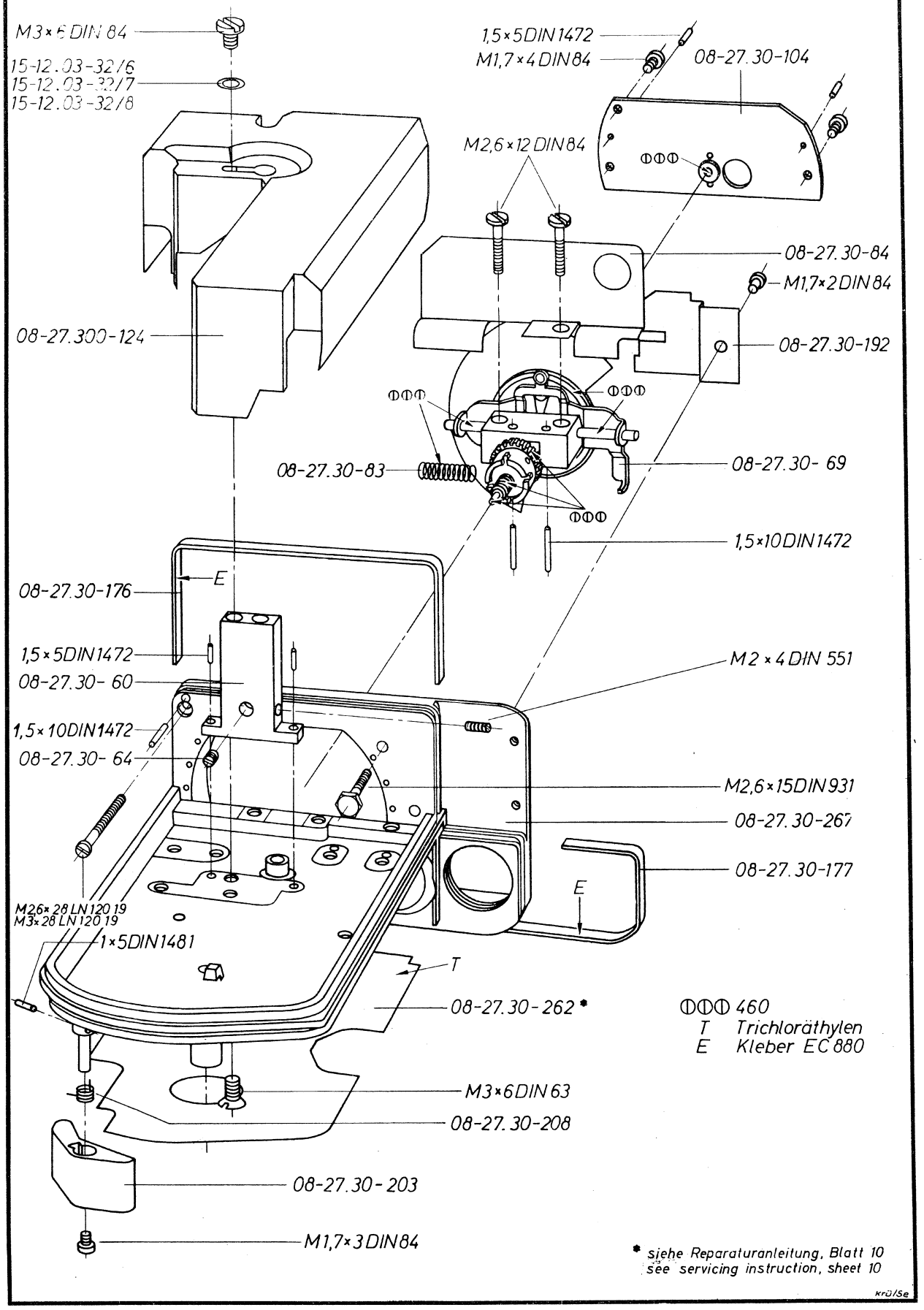

TECHNISCHER KUNDENDIENST

15. 3.65

Ernst Leitz GmbH Wetzlar	LEICINA 8S ohne without Prüf...Prüf 14	Blatt Sheet 5.1		
Bauteil-Nr Part-No	Benennung Description	Leicina-Modell 8 S	8 V	8 SV
M 1,7 x 4 DIN 551	Gewindestift, brüniert, bei Bedarf grub screw, burnished, when needed	1	-	-
M 2 x 4 DIN 551	Gewindestift, brüniert, bei Bedarf grub screw, burnished, when needed	1	1	1
M2,6x12 DIN 931	Sechskantschraube, gebeizt hexagon screw, stained	1	1	1
1,5 x 5 DIN 1472	Zylinderstift, brüniert cylindrical pin, burnished	4	4	4
1,5 x 10 DIN 1472	Zylinderstift, brüniert cylindrical pin, burnished	2	4	4
1 x 5 DIN 1481	Spannstift split pin	1	1	1
M2,6x28 LN 120 19	Zylinderschraube, brüniert cylindrical head screw, burnished	2	2	2
M 3 x 28 LN 120 19	Zylinderschraube, brüniert, bei Bedarf cylindrical head screw, burnished, when needed	2	2	2

LEICINA 8S ohne / without Prüf... Prüf 14

Ernst Leitz GmbH Wetzlar

Bestell-Nr / Part-No	Benennung / Description	Leicina-Modell 8 S	8 V	8 SV
08-27.30- 6	Platine, genietet plate, riveted	1	-	-
08-27.30- 60	Blendenlager, hinten bearing of the diaphragm shaft, behind	1	1	1
08-27.30- 64	Blendenlagerbuchse bush of the diaphragm shaft	1	1	1
08-27.30- 69	Blendenachse, kompl. mit Greiferfeder, ø des Blendenritzels = 11,1 mm, nur in Verbindung mit 08-27.30-121 und 302-050.031-1 (siehe Blatt 7) diaphragm shaft, compl. with claw spring, dia. mm of the diaphragm gear = 11.1, only together with 08-27.30-289 and 302-050.031-1 (see sheet 7)	1	-	-
08-27.30- 83	Greiferfeder claw spring	1	1	1
08-27.30- 84	Abdeckung guard plate	1	1	1
08-27.30-104	Blendenlager, vorn bearing of the diaphragm shaft, ahead	1	1	1
08-27.30-171	Abdeckblech protective cover	1	-	-
08-27.30-176	Plüschstreifen plush strip	1	1	1
08-27.30-177	Plüschstreifen plush strip	1	1	1
08-27.30-192	Abdeckblech protective cover	1	1	1
08-27.30-203	Hebel lever	1	1	1
08-27.30-204	Achse mit Spannstift shaft with split pin	1	1	1
08-27.30-208	Drehfeder tension spring	1	1	1
08-27.30-262	Abdeckfolie, selbstklebend corer foil, self-sealing	1	1	1
15-12.03-32/6	Unterlegscheibe, 0,2 mm dick, bei Bedarf, gebeizt washer, 0.2 mm thick, when needed, corroded	1	1	1
15-12.03-32/7	Unterlegscheibe, 0,3 mm dick, bei Bedarf, gebeizt washer, 0.3 mm thick, when needed, corroded	1	1	1
15-12.03-32/8	Unterlegscheibe, 0,5 mm dick, bei Bedarf, gebeizt washer, 0.5 mm thick, when needed, corroded	1	1	1
M 3 x 6 DIN 63	Senkschraube, brüniert countersunk screw, burnished	1	1	1
M 1,7 x 2 DIN 84	Zylinderschraube, brüniert cylindrical head screw, burnished	1	1	1
M 1,7 x 3 DIN 84	Zylinderschraube, brüniert cylindrical head screw, burnished	1	1	1
M 1,7 x 4 DIN 84	Zylinderschraube, brüniert cylindrical head screw, burnished	3	3	3
M 2,6 x 12 DIN 84	Zylinderschraube, brüniert cylindrical head screw, burnished	2	2	2
M 3 x 6 DIN 84	Zylinderschraube, brüniert cylindrical head screw, burnished	1	1	1

TECHNISCHER KUNDENDIENST

15. 3. 65

Ernst Leitz GmbH Wetzlar	LEICINA 8S ohne / without Prüf... Prüf 14	Blatt / Sheet 5.1

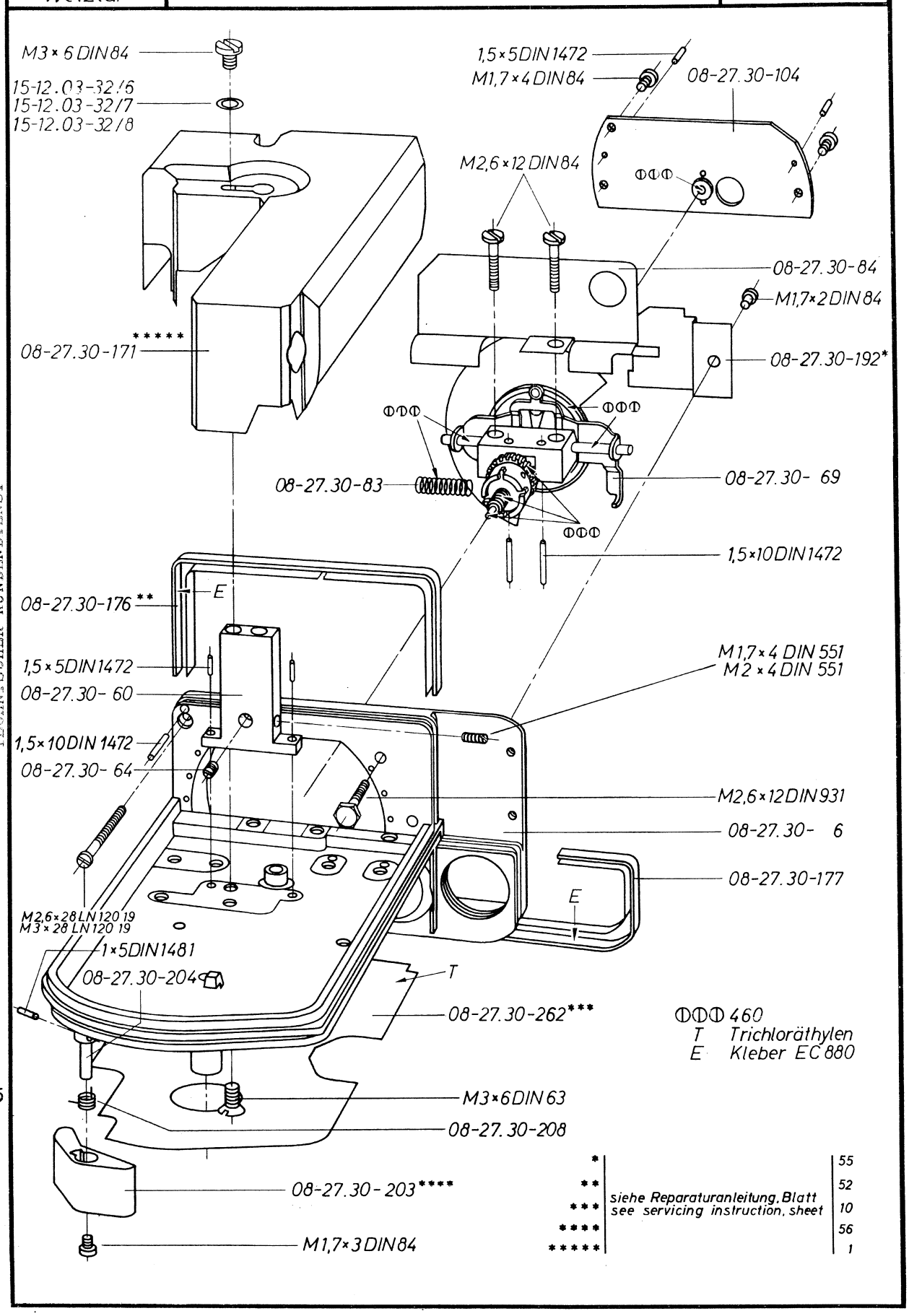

ΦΦΦ 460
T Trichloräthylen
E Kleber EC 880

*	siehe Reparaturanleitung, Blatt / see servicing instruction, sheet	55
**		52
***		10
****		56
*****		1

TECHNISCHER KUNDENDIENST

15. 3.65

Ernst Leitz GmbH Wetzlar	LEICINA 8s Prüf 15...	Blatt Sheet 6.2		
Bestell-Nr. Part-No.	Benennung Description	Leicina-Modell 8 S	8 V	8 SV
M 1,7 x 2,5 DIN 920	Zylinderschraube, brüniert cylindrical head screw, burnished	1	1	1
1,5 DIN 6799	Sicherungsscheibe, brüniert retaining washer, burnished	3	3	3
1,9 DIN 6799	Sicherungsscheibe, brüniert retaining washer, burnished	2	2	2
M 1,7 x 2,5 DIN 120 [illegible]	Zylinderschraube, brüniert cylindrical head screw, burnished	1	1	1

Blatt Sheet 6.2	LEICINA 8S Prüf 15...	Ernst Leitz GmbH Wetzlar		
Bestell-Nr Part-No	Benennung Description	Leicina-Modell 8 S	8 V	8 SV
08-27.30- 12	Umlenkrolle guide roller	1	1	1
08-27.30- 29	Reibungsfeder friction spring	1	1	1
08-27.30- 30	Mutter nut	1	1	1
08-27.30- 35	Scheibe washer	5	5	5
08-27.30- 37	Andruckplatte, kompl. pressure plate, compl.	1	1	1
08-27.30- 38	Andruckplatte pressure plate	1	1	1
08-27.30- 42	Andruckfeder pressure spring	1	1	1
08-27.30- 43	Schwenkklappe swivel carriage	1	1	1
08-27.30- 44	Laufrolle roller	2	2	2
08-27.30- 45	Druckfeder pressure spring	1	1	1
08-27.30- 46	Raststift drop-in pin	1	1	1
08-27.30-180	Fassung mit Linse, 10 mm lang mount with lens, 10 mm long	1	-	1
08-27.30-197	Leitblech / film leader	1	1	1
08-27.30-202	Unterlage für Filmkanal / metal-pad for film track			
08-27.30-253	Bolzen bolt	1	1	1
08-27.30-254	Filmkanal film track	1	1	1
08-27.30-255	Führungsfeder guide spring	1	1	1
08-27.30-256	Unterlegblech intermediate plate	1	1	1
08-27.30-264	Friktionshülse, kompl. friction socket, compl.	1	1	1
08-27.30-265	Aufwickelachse winding shaft	1	1	1
08-27.30-266	Friktionshülse friction socket	1	1	1
08-27.30-270	Aufwickelritzel take-up pinion	1		1
08-28.30- 13	Fassung mit Linse, 25 mm lang (nur für Leicina 8 V) mount with lens, 25 mm long (for Leicina 8 V only)	-	1	-
08-35.30-100	Vorschraubring (nur für Leicina 8 V und 8 SV) retaining ring (for Leicina 8 V and 8 SV only)	-	1	1
15-10.170-20	Zylinderschraube, brüniert cylindrical head screw, burnished	3	3	3
15-12.02-28/2	Unterlegscheibe, brüniert washer, burnished	1	1	1
15-12.03-21/1	Unterlegscheibe, brüniert washer, burnished	1	1	1
1,8 DIN 125	Unterlegscheibe, schwarz halbmatt washer, black semimat	1	1	1
M 2 DIN 546	Schlitzmutter, brüniert slotted nut, burnished	1	1	1
M 1,7 x 2 DIN 553	Gewindestift, brüniert grub screw, burnished	2	2	2

30. 9.65

Ernst Leitz GmbH Wetzlar	LEICINA 8s Prüf 15...	Blatt Sheet 6.2

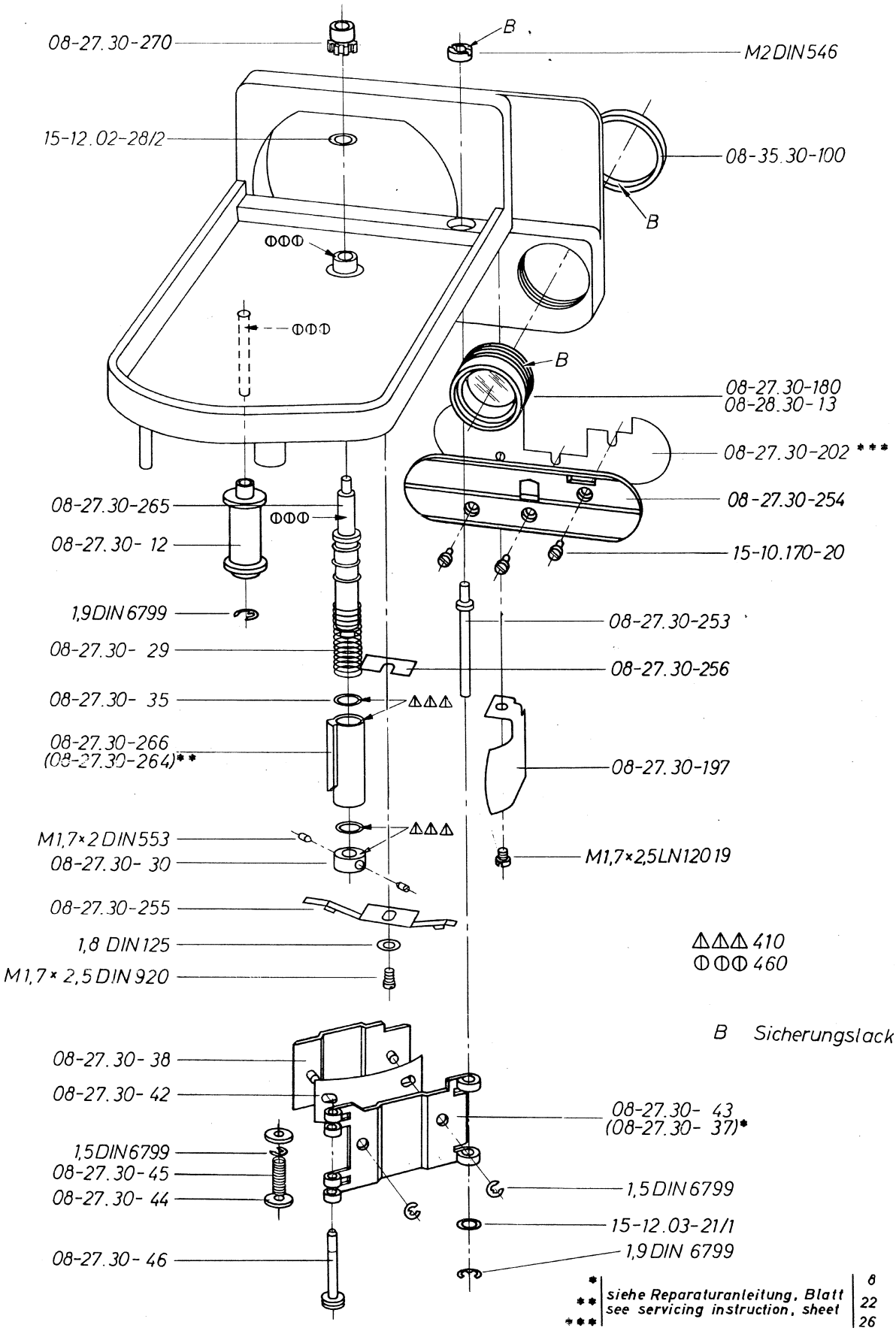

TECHNISCHER KUNDENDIENST

30. 9. 65

Blatt / Sheet 6.1	LEICINA 8S ohne / without Prüf... Prüf 14	Ernst Leitz GmbH Wetzlar		
Bestell-Nr / Part-No	Benennung / Description	Leicina-Modell 8 S	8 V	8 SV
08-27.30- 12	Umlenkrolle / guide roller	1	1	1
08-27.30- 20	Filmkanal / film track	1	-	-
08-27.30- 21	Führungsfeder / guide spring	1	-	-
08-27.30- 29	Friktionsfeder / friction spring	1	1	1
08-27.30- 30	Mutter / nut	1	1	1
08-27.30- 35	Scheibe / washer	5	5	5
08-27.30- 37	Andruckplatte, kompl. / pressure plate, compl.	1	1	1
08-27.30- 38	Andruckplatte / pressure plate	1	1	1
08-27.30- 42	Andruckfeder / pressure spring	1	1	1
08-27.30- 43	Schwenkklappe / swivel carriage	1	1	1
08-27.30- 44	Laufrolle / roller	2	2	2
08-27.30- 45	Druckfeder / pressure spring	1	1	1
08-27.30- 46	Raststift / drop-in pin	1	1	1
08-27.30-180	Fassung mit Linse / mount with lens	1	-	1
08-27.30-197	Leitblech / film leader	1	1	1
08-27.30-202	Unterlage für Filmkanal, bei Bedarf / metal-pad for film track, when needed	1	1	1
08-27.30-264	Friktionshülse, kompl. / friction socket, compl.	1	1	1
08-27.30-265	Aufwickelachse / take-up shaft	1	1	1
08-27.30-266	Friktionshülse / friction socket	1	1	1
08-27.30-270	Aufwickelritzel / take-up pinion	1	1	1
08-27.30-291	Distanzscheibe / intermediate disc	1	1	-
08-27.30-999	Führungssteg / guide ledge	1	1	1
15-10.170-20	Zylinderschraube, brüniert / cylindrical head screw, burnished	2	3	3
15-12.03-21/1	Scheibe, brüniert / washer, burnished	1	1	1
M1,7 x 2 DIN 553	Gewindestift / grub screw	2	2	2
M1,7x2,5 LN 120 19	Zylinderschraube, brüniert / cylindrical head screw, burnished	1	1	1
1,5 DIN 6799	Sicherungsscheibe, brüniert / retaining washer, burnished	3	3	3
1,9 DIN 6799	Sicherungsscheibe, brüniert / retaining washer, burnished	2	2	2

TECHNISCHER KUNDENDIENST

30. 9.65

Ernst Leitz GmbH Wetzlar	LEICINA 8S ohne / without Prüf... Prüf 14	Blatt / Sheet 6.1

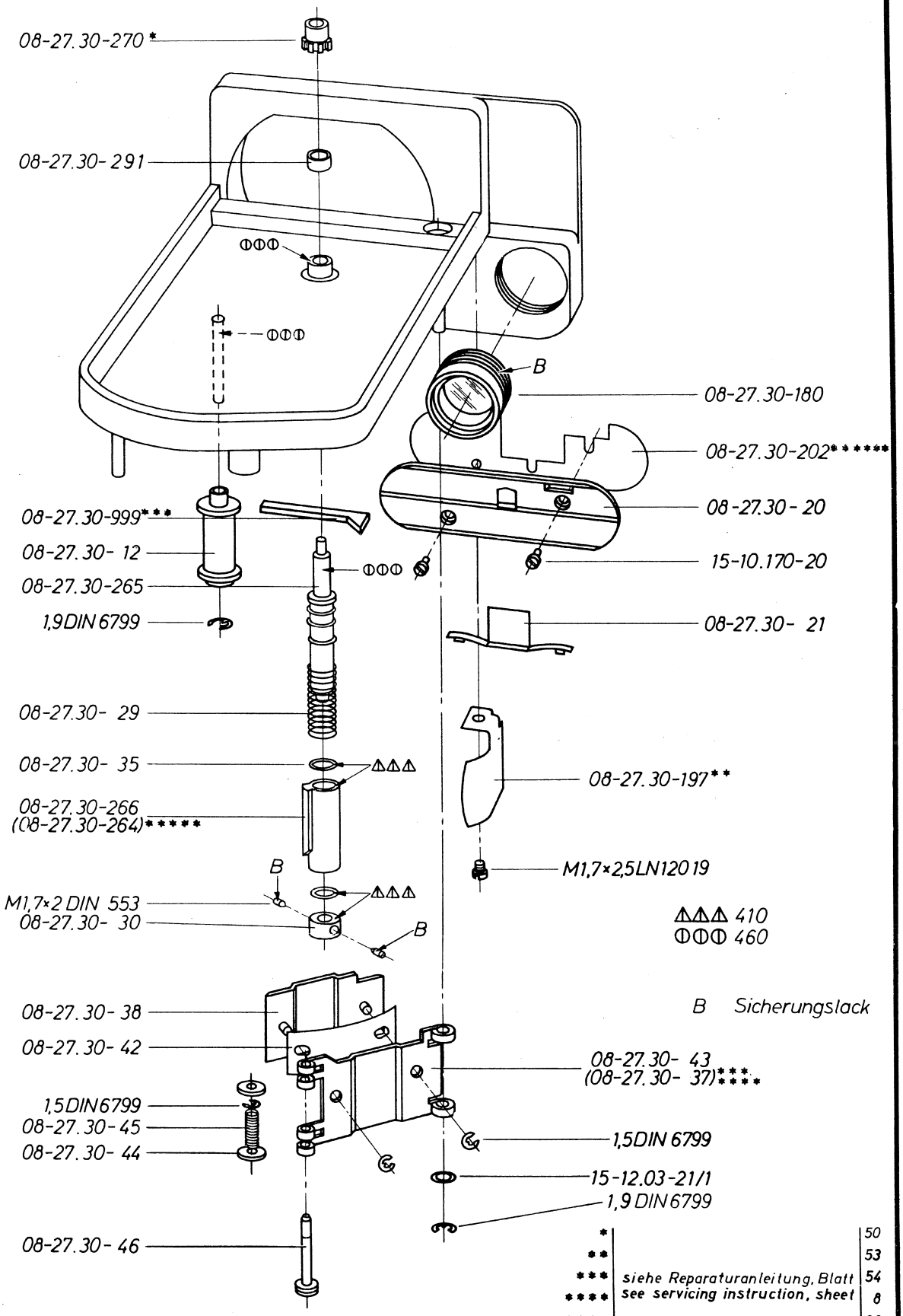

30. 9. 65

Leitz WETZLAR	LEICINA 8S ohne without Prüf...	Blatt Sheet 7.2		
Bestell-Nr Part-No	Benennung Description	Leicina-Modell 8 S	8 V	8 SV
305-024.027-001	Drehmagnetmeßwerk moving-needle measuring instrument	1	1	1
M 1,7 x 4 DIN 84	Zylinderschraube, brüniert cylindrical head screw, burnished	4	-	(4)
M 1,7 x 7 DIN 84	Zylinderschraube, brüniert cylindrical head screw, burnished	4	4	4
M 1,7 x 2,5 DIN 920	Linsenschraube, brüniert oval head screw, burnished	2	2	2
M 2 x 2 DIN 923	Linsenschraube mit Ansatz, brüniert oval head screw, burnished	1	1	1
1,5 x 5 DIN 1473	Paßkerbstift, brüniert notched dowel pin, burnished	2	2	2
1,5 DIN 6799	Sicherungsscheibe retaining washer	1	1	1
A 1,2 x 0,2 x 4,5 DIN 7340	Rohrniet rivet	2	2	2
M 2,6 x 4 LN 120 19	Zylinderschraube, brüniert cylindrical head screw, burnished	6	6	6
M 2,6 x 10 LN 120 19	Zylinderschraube, brüniert cylindrical head screw, burnished	2	-	-
15-12.01-11/3	Unterlegscheibe washer	4	4	4
15-12.02-17/1	Unterlegscheibe washer	1	-	(1)
15-12.02-19/1	Unterlegscheibe washer	1	1	1
15-12.03-21/1	Unterlegscheibe washer	1	1	1

Blatt / Sheet 7.2	LEICINA 8S ohne / without Prüf...	Leitz WETZLAR		
Bestell-Nr / Part-No	Benennung / Description	Leicina-Modell 8 S	8 V	8 SV
08-27.30 E8-19	Isolierschlauch / insulating spaghetti	1	-	-
08-27.30 E6- 1	Kabel, weiß-grün / cable, white-green	1	-	-
08-27.30 E6- 2	Kabel, gelb-braun / cable, yellow-brown	1	-	-
08-27.30 E6- 3	Kabel, blau-weiß / cable, blue-white	1	-	-
08-27.30 E6- 7	Kabel, grün-rot / cable, green-red	1	-	-
08-27.30 E6- 9	Kabel, gelb-weiß / cable, yellow-white	2	-	-
08-27.30 E6-11	Kabel, gelb-weiß / cable, yellow-white	2	-	-
08-27.30 E6-12	Kabel, gelb-braun / cable, yellow-brown	1	-	-
08-27.30 E6-14	Kabel, weiß-grün / cable, white-green	1	-	-
08-27.300 E6 - 1	Kabel, schwarz / cable, black	1	-	-
08-27.300 E6 - 2	Kabel, gelb-braun / cable, yellow-brown	1	-	-
08-27.300 E6 - 3	Kabel, blau-weiß / cable, blue-white	1	-	-
08-27.300 E6 - 5	Kabel, gelb-rot / cable, yellow-red	1	-	-
08-27.30- 54	Stecker / plug	1	-	-
08-27.30-130	Unterlegblech, magnetisiert / plate, magnetized	1	1	-
08-27.30-134	Schalterträger / switch frame	1	1	-
08-27.30-135	Schalterträger, kompl. mit Mikroschalter / switch frame, compl. with micro switch	1	1	-
08-27.30-138	Stopper-Schaltarm / stopper switch arm	1	1	-
08-27.30-139	Feder / spring	1	1	-
08-27.30-144	Isolierfolie / insulation foil	1	1	1
08-27.30-146	Stopper / stopper	1	1	1
08-27.30-152	Unterlage / sleeve	1	-	-
08-27.30-160	Kontakthalter / contact holder	1	1	1
08-27.300-070	Motorlager mit Motor / motor bearing with motor	1	-	-
08-27.300-071	Motorlager / motor bearing	1	-	(1)
08-27.300-074	Zwischenrad / intermediate wheel	1	-	(1)
302-23.45-4	Mikroschalter / micro switch	2	2	2
302-023.092-001	Schiebeschalter / sliding switch	1	-	-
302-050.042	Motor / motor	1	-	-
302-051.003-001	RC-Kombination mit Kabel, gelb-weiß / RC-combination with cable, yellow-white	1	-	-

TECHNISCHER KUNDENDIENST

30. 9.65

Ernst Leitz GmbH Wetzlar	LEICINA 8S ohne / without Prüf...	Blatt / Sheet 7.2

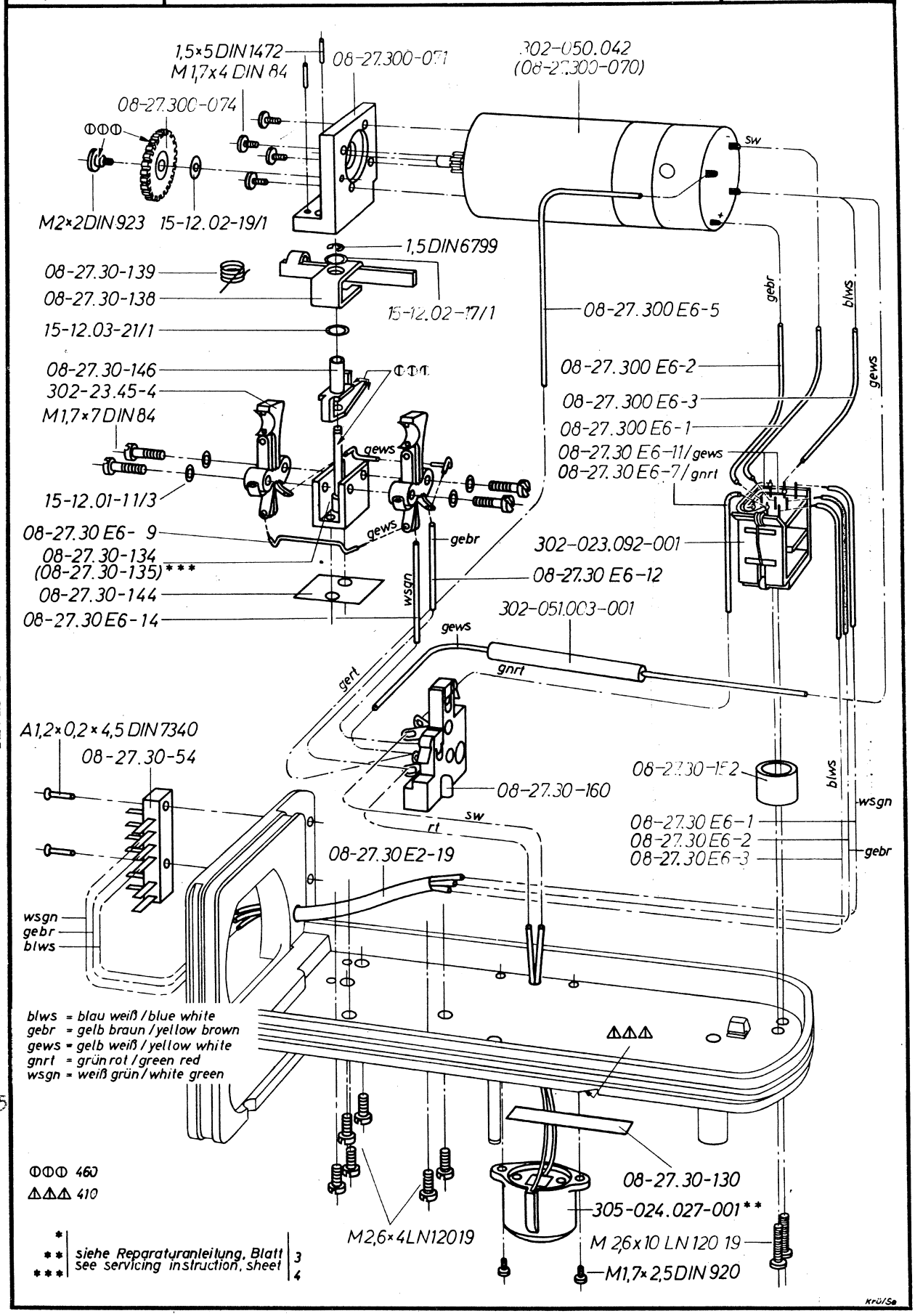

TECHNISCHER INFORMDIENST

30. 9. 65

Ernst Leitz GmbH Wetzlar	LEICINA 8S ohne / without Prüf...	Blatt / Sheet 7.1		
Bestell-Nr / Part-No	Benennung / Description	Leicina-Modell 8 S	8 V	8 SV
08-27.30-144	Isolierfolie insulation foil	1	1	1
08-27.30-146	Stopper stopper	1	1	1
08-27.30-152	Unterlage sleeve	1	-	-
08-27.30-160	Kontakthalter contact holder	1	1	1
08-27.30-286	Motorlager, kompl. mit Motor (ø des Motorritzels = 4,8 mm) und Zwischenrad (ø = 14,3 mm) nur in Verbindung mit 08-27.30-280 (siehe Blatt 5) motor bearing, compl. with motor (dia. mm of the motor gear = 4.8 mm) and intermediate wheel (dia. mm = 14.3 mm) only together with 08-27.30-280 (see sheet 5)	1	-	-
08-27.30-289	Zwischenrad, ø = 14,3 mm, nur in Verbindung mit 302-050.031-2 und 08-27.30-280 (siehe Blatt 5) intermediate wheel, dia. mm = 14.3 mm, only together with 302-050.031-2 and 08-27.30-280 (see sheet 5)	1	1	1
302-23.45-4	Mikroschalter / micro switch	2	2	2
302-023.092-001	Schiebeschalter / sliding switch	1	-	-
302-050.031-1	Motor, ø des Motorritzels = 4,5 mm, nur in Verbindung mit 08-27.30-121 und 08-27.30-69 (siehe Blatt 5) motor, dia. mm of the motor gear = 4.5 mm, only together with 08-27.30-121 and 08-27.30-69 (see sheet 5)	1	-	-
302-050.031-2	Motor, ø des Motorritzels = 4,8 mm, nur in Verbindung mit 08-27.30-289 und 08-27.30-280 (siehe Blatt 5) motor, dia. mm of the motor gear = 4.8 mm, only together with 08-27.30-289 and 08-27.30-280 (see sheet 5)	1	-	-
305-051.003-001	RC-Kombination mit Kabel, gelb-weiß RC-combination with cable, yellow-white	1	-	-
305-024.027-001	Drehmagnetmeßwerk moving-needle measuring instrument	1	1	1
M1,7x2,5 DIN920	Linsenschraube, brüniert oval head screw, burnished	2	2	2
M1,7 x 7 DIN 84	Zylinderschraube, brüniert cylindrical head screw, burnished	4	4	4
M 2 x 2 DIN 923	Linsenschraube mit Ansatz, brüniert oval head screw, burnished	1	1	1
M 2 x 4 DIN 84	Zylinderschraube, brüniert cylindrical head screw, burnished	4	4	4
M2,6 x 4 LN 120 19	Zylinderschraube, brüniert cylindrical head screw, burnished	6	6	6
M2,6 x 10 LN 12019	Zylinderschraube, brüniert cylindrical head screw, burnished	2	-	-
15-10.170-27	Zylinderschraube, gebeizt cylindrical head screw, corroded	2	-	-
15-12.01-11/3	Unterlegscheibe / washer	4	4	4
15-12.02-19/1	Unterlegscheibe / washer	1	1	1
15-12.03-21/1	Unterlegscheibe / washer	1	1	1
1,5 x 5 DIN 1472	Paßkerbstift, brüniert notched dowel pin, burnished	2	2	2
1,5 DIN 6799	Sicherungsscheibe / retaining washer	1	1	1
A 1,2 x 0,2 x 4,5 DIN 7340	Rohrniet rivet	2	2	2

Blatt Sheet 7.1	LEICINA 8S ohne without Prüf...	Ernst Leitz GmbH Wetzlar		
Bestell-Nr Part-No	Benennung Description	Leicina-Modell 8 S	8 V	8 SV
08-27.30 E2-19	Isolierschlauch insulating spaghetti	1	-	-
08-27.30 E2-20	Isolierschlauch insulating spaghetti	1	-	-
08-27.30 E6- 1	Kabel, weiß-grün cable, white-green	1	-	-
08-27.30 E6- 2	Kabel, gelb-braun cable, yellow-brown	1	-	-
08-27.30 E6- 3	Kabel, blau-weiß cable, blue-white	1	-	-
08-27.30 E6- 7	Kabel, grün-rot cable, green-red	1	-	-
08-27.30 E6- 9	Isolierschlauch insulating spaghetti	2	-	-
08-27.30 E6-11	Kabel, gelb-weiß cable, yellow-white	2	-	-
08-27.30 E6-12	Kabel, gelb-braun cable, yellow-brown	1	-	-
08-27.30 E6-14	Kabel, weiß-grün cable, white-green	1	-	-
08-27.30 E6-26	Kabel, rot cable, red	1	-	-
08-27.30 E6-27	Kabel, gelb cable, yellow	1	-	-
08-27.30 E6-28	Kabel, grün cable, green	1	-	-
08-27.30 E6-29	Kabel, weiß cable, white	1	-	-
08-27.30 E52	Isolierschlauch mit RC-Komb. und Kabel, grün-rot insulating spaghetti with RC-comb. and cable, green-red	1	-	-
08-27.30- 54	Stecker plug	1	-	-
08-27.30-116	Motorlager, kompl. mit Motor (Ø des Motorritzels = 4,5 mm) und Zwischenrad (Ø = 14,7 mm) nur in Verbindung mit 302-050.031-1 und 08-27.30-69 (siehe Blatt 5) motor bearing, compl. with motor (dia. mm of the motor gear = 4.5 mm) and intermediate wheel (dia.mm = 14.7 mm) only together with 302-050.031-1 and 08-27.30-69 (see sheet 5)	1	-	-
08-27.30-117	Motorlager motor bearing	1	1	1
08-27.30-120	Klebestreifen adhesive strip	2	-	-
08-27.30-121	Zwischenrad Ø = 14,7 mm, nur in Verbindung mit 302-050.031-1 und 08-27.30-69 (siehe Blatt 5) intermediate wheel dia. mm = 14.7 mm, only together with 302-050.031-1 and 08-27.30-69 (see sheet 5)	1	-	-
08-27.30-130	Unterlegblech, magnetisiert plate, magnetized	1	1	-
08-27.30-134	Schalterträger switch frame	1	1	-
08-27.30-135	Schalterträger, kompl. mit Mikroschalter switch frame, compl. with micro switch	1	1	-
08-27.30-138	Stopper-Schaltarm stopper switch arm	1	1	-
08-27.30-139	Feder spring	1	1	-

TECHNISCHER KUNDENDIENST

5.12.63

Ernst Leitz GmbH Wetzlar	LEICINA 8S ohne / without Prüf...	Blatt / Sheet 7.1

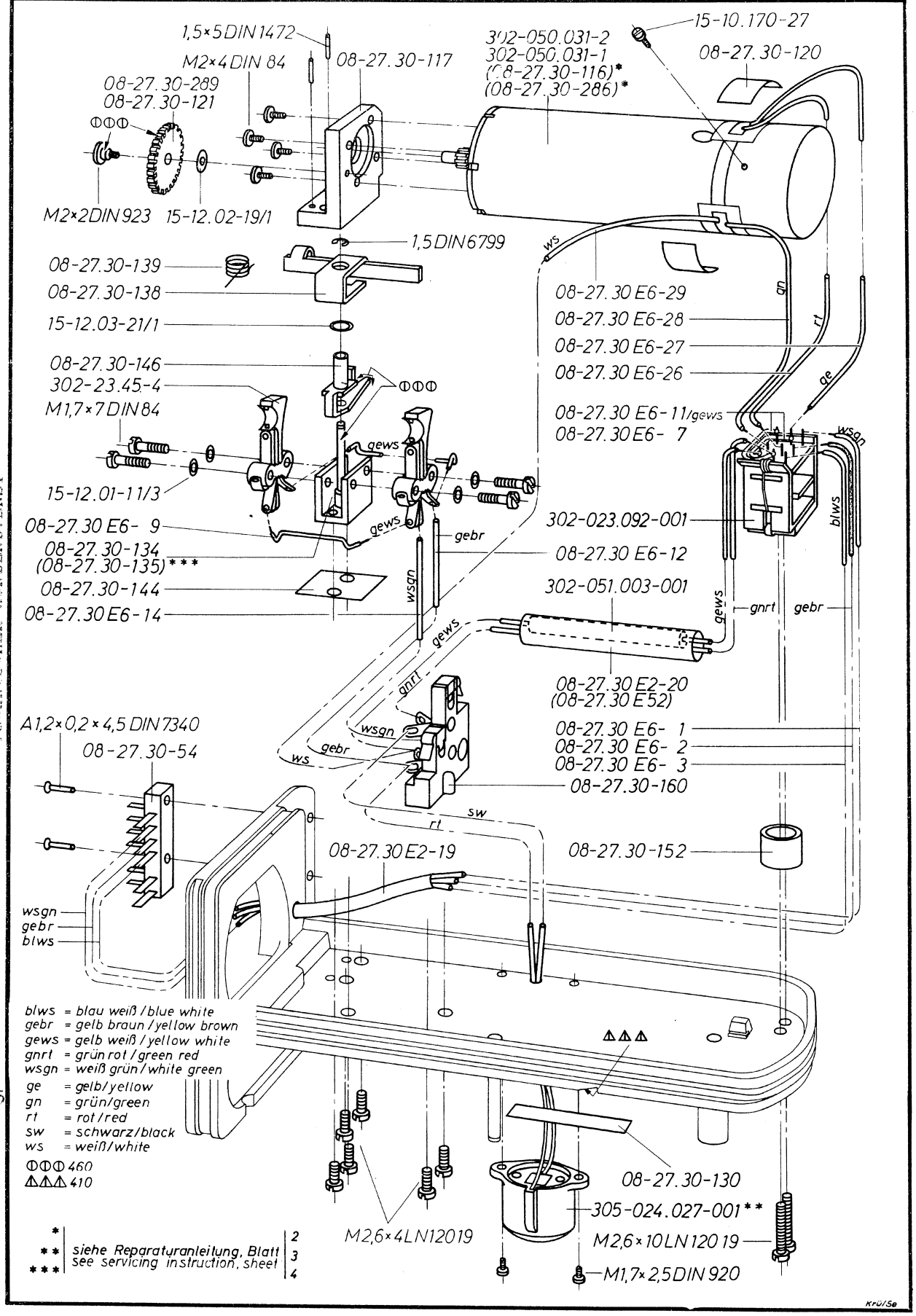

TECHNISCHER KUNDENDIENST

15. 3.65

Blatt Sheet 8.1	LEICINA 8V	Ernst Leitz GmbH Wetzlar		
Bestell-Nr Part-No	Benennung Description	Leicina-Modell 8 V	8 S	8 SV
08-27.40- 8	Schaltstange switching bar	1	1	1
08-27.40- 9	Druckfeder pressure spring	1	1	1
08-27.40-12	Auslösegriff release handle	1	1	1
08-27.40-34	Abdeckplatte plate	1	1	1
08-27.40-40	Hülse sleeve	2	2	2
08-27.40-41	Druckstift pressure pin	2	2	2
08-27.40-42	Druckfeder pressure spring	2	2	2
08-27.40-43	Drahtauslösernippel, rot ausgelegt wire release nipple, red covered	1	1	1
08-27.40-43	Drahtauslösernippel wire release nipple	1	1	1
08-27.40-44	Anschlagring für Einzelbildschaltung flange ring for single-frame exposure	1	1	1
08-27.40-66	Befestigungsschraube screw	1	1	1
08-27.40-68	Sicherungsscheibe washer	1	1	1
08-28.40-20	Raststück rest piece	1	-	1
08-28.40-25	Griff handle	1	-	-
08-28.40-35	Rastnippel engaging pin	1	-	-
08-28.40-37	Achse shaft	1	-	-
08-30.40-52	Abdeckschraube, bei Bedarf screw, when needed	1	-	1
08-35.40- 1	Motordeckel, kompl. mit allen auf diesem Blatt dargestellten Teilen engine cowl, compl. with all parts shown on this sheet	1	-	-
08-35.40- 7	Motordeckel engine cowl	1	-	1
15-11.33-5	Mutter nut	1	1	1
15-12.04-6/7	Unterlegscheibe, brüniert washer, burnished	1	1	1
16-14.042-20	Tellerfeder cup spring	7	-	7
1,5 x 12 DIN 1472	Paßkerbstift, brüniert notched dowel pin, burnished	1	-	1
1,4 x 3 DIN 1477	Senkkerbnagel, verchromt countersunk rivet, chrome-plated	2	2	2
1 x 12 DIN 1481	Spannhülse, brüniert tension, burnished	1	1	1
2,3 DIN 6799	Sicherungsscheibe retaining washer	1	1	1

TECHNISCHER KUNDENDIENST

5.12.63

Ernst Leitz GmbH Wetzlar	LEICINA 8V	Blatt Sheet 8.1

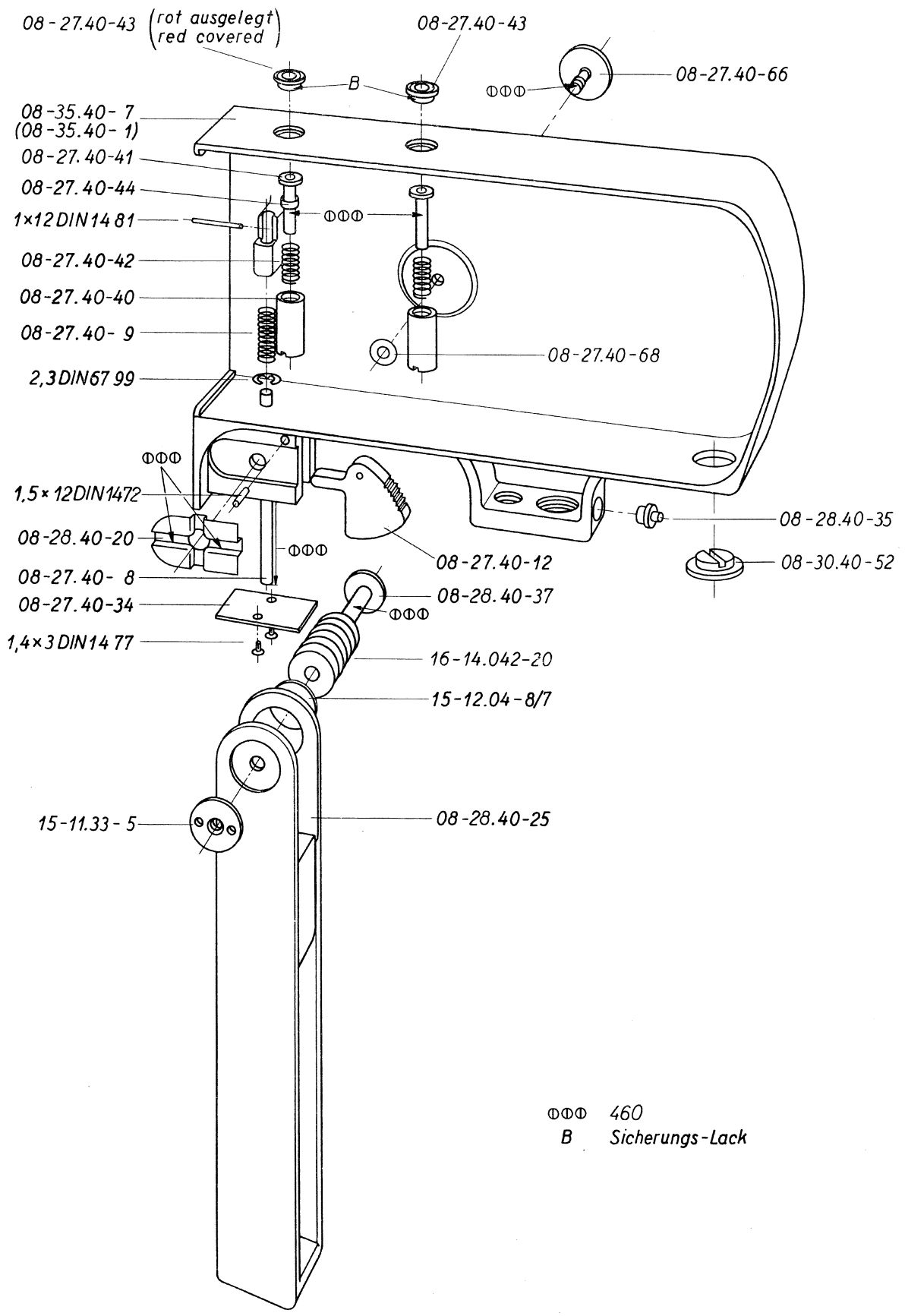

TECHNISCHER KUNDENDIENST

15. 3.65

Krö/Se

Bestell-Nr Part-No	Benennung Description	Leicina-Modell 8 V	8 S	8 SV
43 KΩ 5 % 5 DIN 41 399	Schichtwiderstand R 16, R 24 (je nach Meßergebnis wird 1 Stück von 4,7 KΩ bis 1 MΩ benötigt) Layer resistance R 16, R 24 (according to the respective measurement result, 1 piece 4,7 to 1 MΩ is required)	nach Bedarf when needed	-	nach Bedarf when needed
47 KΩ 5 % 5 DIN 41 399			-	
51 KΩ 5 % 5 DIN 41 399			-	
56 KΩ 5 % 5 DIN 41 399			-	
62 KΩ 5 % 5 DIN 41 399			-	
68 KΩ 5 % 5 DIN 41 399			-	
75 KΩ 5 % 5 DIN 41 399			-	
82 KΩ 5 % 5 DIN 41 399			-	
91 KΩ 5 % 5 DIN 41 399			-	
100 KΩ 5 % 5 DIN 41 399			-	
120 KΩ 5 DIN 41 399			-	
150 KΩ 5 DIN 41 399			-	
180 KΩ 5 DIN 41 399			-	
220 KΩ 5 DIN 41 399			-	
270 KΩ 5 DIN 41 399			-	
330 KΩ 5 DIN 41 399			-	
390 KΩ 5 DIN 41 399			-	
470 KΩ 5 DIN 41 399			-	
560 KΩ 5 DIN 41 399			-	
680 KΩ 5 DIN 41 399			-	
820 KΩ 5 DIN 41 399			-	
1 MΩ 5 DIN 41 399			-	

Blatt Sheet 9.1	LEICINA 8V	Ernst Leitz GmbH Wetzlar

Bestell-Nr Part-No	Benennung Description	Leicina-Modell 8 V	8 S	8 SV
1,0 KΩ 5 % 5 DIN 41 399	Schichtwiderstand R 1 (je nach Meßergebnis wird 1 Stück von 1 KΩ bis 13 KΩ benötigt) Layer resistance R 1 (according to the respective measurement result, 1 piece 1 KΩ to 13 KΩ is required)	nach Bedarf when needed	-	nach Bedarf when needed
1,1 KΩ 5 % 5 DIN 41 399			-	
1,2 KΩ 5 % 5 DIN 41 399			-	
1,3 KΩ 5 % 5 DIN 41 399			-	
1,5 KΩ 5 % 5 DIN 41 399			-	
1,6 KΩ 5 % 5 DIN 41 399			-	
1,8 KΩ 5 % 5 DIN 41 399			-	
2,0 KΩ 5 % 5 DIN 41 399			-	
2,2 KΩ 5 % 5 DIN 41 399			-	
2,4 KΩ 5 % 5 DIN 41 399			-	
2,7 KΩ 5 % 5 DIN 41 399			-	
3,0 KΩ 5 % 5 DIN 41 399			-	
3,3 KΩ 5 % 5 DIN 41 399			-	
3,6 KΩ 5 % 5 DIN 41 399			-	
3,9 KΩ 5 % 5 DIN 41 399			-	
4,3 KΩ 5 % 5 DIN 41 399			-	
4,7 KΩ 5 % 5 DIN 41 399			-	
5,1 KΩ 5 % 5 DIN 41 399			-	
5,6 KΩ 5 % 5 DIN 41 399			-	
6,2 KΩ 5 % 5 DIN 41 399			-	
6,8 KΩ 5 % 5 DIN 41 399			-	
7,5 KΩ 5 % 5 DIN 41 399			-	
8,2 KΩ 5 % 5 DIN 41 399			-	
9,1 KΩ 5 % 5 DIN 41 399			-	
10 KΩ 5 % 5 DIN 41 399			-	
11 KΩ 5 % 5 DIN 41 399			-	
12 KΩ 5 % 5 DIN 41 399			-	
13 KΩ 5 % 5 DIN 41 399			-	
16 KΩ 0,25 W ± 10 % Klasse 5 axial	Schichtwiderstand R 2 layer resistance R 2	1	1	1
13 KΩ 5 % 5 DIN 41 399	Schichtwiderstand R 3 (je nach Meßergebnis wird 1 Stück von 13 KΩ bis 39 KΩ benötigt) Layer resistance R 3 (according to the respective measurement result, 1 piece 13 KΩ to 39 KΩ is required)	nach Bedarf when needed		
15 KΩ 5 % 5 DIN 41 399				
16 KΩ 5 % 5 DIN 41 399				
18 KΩ 5 % 5 DIN 41 399				
20 KΩ 5 % 5 DIN 41 399				
22 KΩ 5 % 5 DIN 41 399				
24 KΩ 5 % 5 DIN 41 399				
27 KΩ 5 % 5 DIN 41 399				
30 KΩ 5 % 5 DIN 41 399				
33 KΩ 5 % 5 DIN 41 399				
36 KΩ 5 % 5 DIN 41 399				
39 KΩ 5 % 5 DIN 41 399				
4,7 KΩ 5 % 5 DIN 41 399	Schichtwiderstand R 16, R 24 (je nach Meßergebnis wird 1 Stück von 4,7 KΩ bis 1 MΩ benötigt) Layer resistance R 16, R 24 (according to the respective measurement result, 1 piece 4,7 to 1 MΩ is required)	nach Bedarf when needed	-	nach Bedarf when needed
5,1 KΩ 5 % 5 DIN 41 399			-	
5,6 KΩ 5 % 5 DIN 41 399			-	
6,2 KΩ 5 % 5 DIN 41 399			-	
6,8 KΩ 5 % 5 DIN 41 399			-	
7,5 KΩ 5 % 5 DIN 41 399			-	
8,2 KΩ 5 % 5 DIN 41 399			-	
9,1 KΩ 5 % 5 DIN 41 399			-	
10 KΩ 5 % 5 DIN 41 399			-	
11 KΩ 5 % 5 DIN 41 399			-	
12 KΩ 5 % 5 DIN 41 399			-	
13 KΩ 5 % 5 DIN 41 399			-	
15 KΩ 5 % 5 DIN 41 399			-	
16 KΩ 5 % 5 DIN 41 399			-	
43 KΩ 5 % 5 DIN 41 399			-	

TECHNISCHER KUNDENDIENST

5.12.63

Blatt Sheet 9.1	LEICINA 8V	Ernst Leitz GmbH Wetzlar		
Bestell-Nr Part-No	Benennung Description	Leicina-Modell 8 V	8 S	8 SV
08-27.10- 37	Batteriehalter battery holder	1	1	1
08-27.10- 45	Batterieknopf battery knob	1	1	1
08-27.10-138	Kontakthalter contact holder	1	1	1
08-27.10-139	Kontaktfeder contact spring	6	6	6
08-27.10-140	Isolierplatte insulation plate	1	1	1
08-28.10- 55	Halter für Fotowiderstand (dunkel lagern) holder for photoresistance (store in a dark place)	1	-	-
08-28.10-143	Lötleiste soldering ledge	1	-	-
08-30.10-115	Befestigungswinkel angle	1	-	1
08-30.10-117	Verstellknopf adjusting knob	1	-	-
08-30.10-118	Abdeckfolie, selbstklebend corer foil, self-sealing	1	-	1
08-30.10-119	Rastfeder spring catch	1	-	1
08-30.10-150	Vorschraubring retaining ring	1	-	1
08-30.10-151	Anschlagschraube stop screw	1	-	1
08-35.10 E5	Kabelbaum mit Isolierschlauch cable duct with insulating spaghetti	1	-	-
08-35.10-194	Stufenschalter, kompl. mit Kabelbaum und Lötleiste speed setting switch, compl. with cable duct and soldering ledge	1	-	-
302-23.90-01	Stufenschalter speed setting switch	1	-	1
	Tesamoll, weiß, 3 x 35 mm Tesamoll, white, 3 x 35 mm	1	-	1
	Tesafix, schwarz, 19 x 40 mm Tesafix, black, 19 x 40 mm	1	-	-
15-12.02-17/6	Unterlegscheibe, Zelluloid washer, celluloid	4	-	-
M 1,4 x 6 DIN 84	Zylinderschraube, verchromt cylindrical head screw, chrome-plated	2	2	2
M 1,4 DIN 546	Schlitzmutter, gebeizt slotted nut, corroded	2	2	2
M 1,7 x 20 DIN 920	Linsenschraube oval head screw	1	-	1
M 2 x 5 DIN 920	Linsenschraube, brüniert oval head screw, burnished	1	-	-

TECHNISCHER KUNDENDIENST

15. 3.65

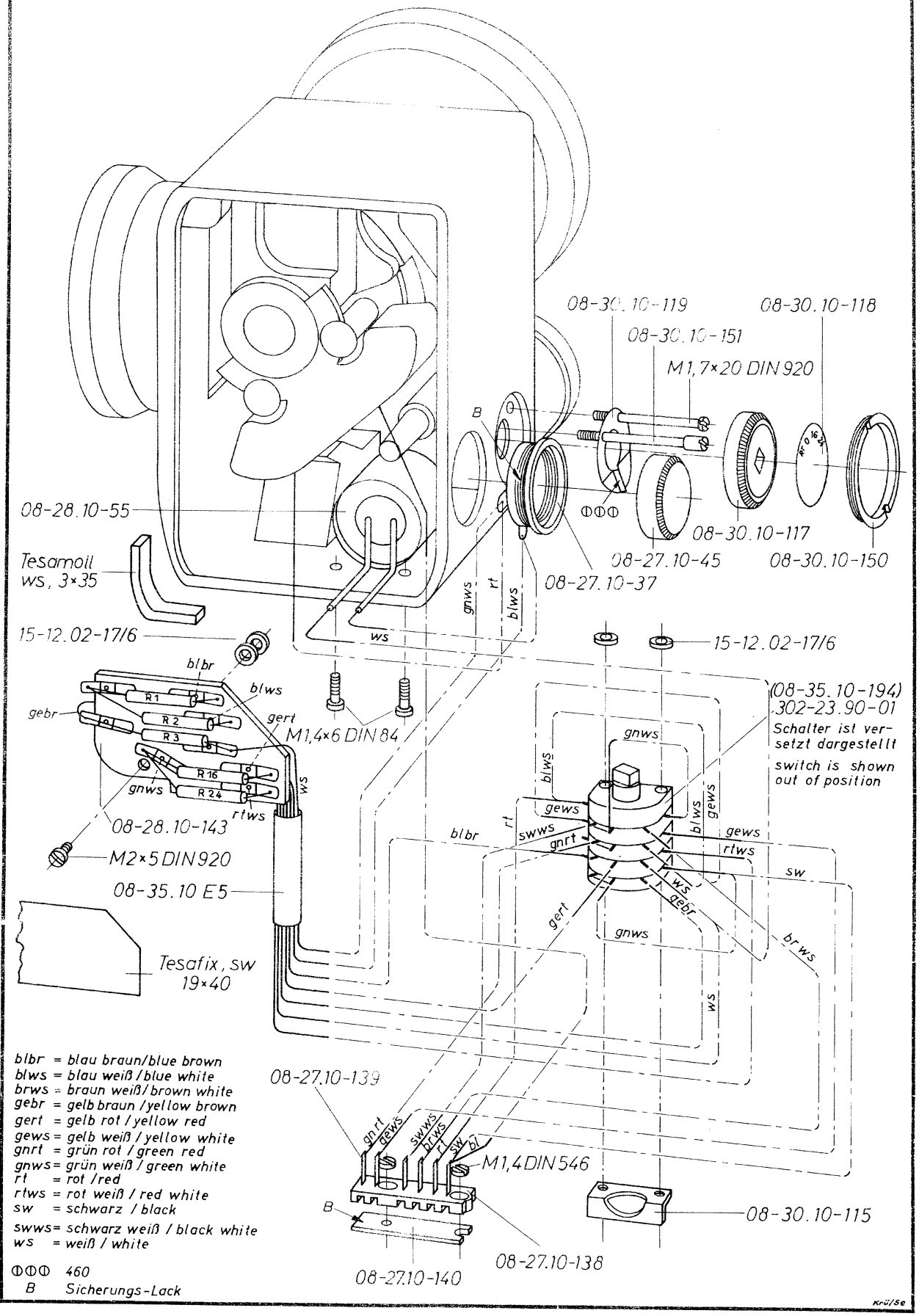

blbr = blau braun/blue brown
blws = blau weiß / blue white
brws = braun weiß / brown white
gebr = gelb braun / yellow brown
gert = gelb rot / yellow red
gewS = gelb weiß / yellow white
gnrt = grün rot / green red
gnws = grün weiß / green white
rt = rot / red
rtws = rot weiß / red white
sw = schwarz / black
swws = schwarz weiß / black white
ws = weiß / white

ΦΦΦ 460
B Sicherungs-Lack

5.12.63

Krü/Se

Ernst Leitz GmbH Wetzlar	LEICINA 8V	Blatt Sheet 10.1		
Bestell-Nr Part-No	Benennung Description	Leicina-Modell 8 V	8 S	8 SV
15-10.20-15	Zylinderschraube, brüniert cylindrical head screw, burnished	2	-	-
15-12.03-17/1	Federscheibe 0,15 dick, brüniert spring disk 0.15 thick, burnished	1	-	-
15-12.03-21/2	Unterlegscheibe 0,1 mm dick, bei Bedarf washer 0.1 mm thick, when needed		-	
15-12.03-21/3	Unterlegscheibe 0,06 mm dick, bei Bedarf washer 0.06 mm thick, when needed		-	
M 1,4 x 10 DIN 84	Zylinderschraube, brüniert cylindrical head screw, burnished	2	-	-
M 2 x 5 DIN 84 MS	Zylinderschraube, brüniert cylindrical head screw, burnished	6	-	-
M1,4 x 2 DIN 553	Gewindestift, brüniert grub screw, burnished	1	-	-
M1,4 x 3 DIN 553	Gewindestift, brüniert grub screw, burnished	1	-	-
M 2 x 6 LN 120 19	Zylinderschraube, verchromt cylindrical head screw, chrome-plated	2	-	-
M1,4 x 2,5 LN 120 43	Gewindestift, brüniert grub screw, burnished	3	-	-

Blatt Sheet 10.1	LEICINA 8V	Ernst Leitz GmbH Wetzlar		
Bestell-Nr Part-No	Benennung Description	Leicina-Modell 8 V	8 S	8 SV
08-27.10- 75	Abdeckblech protective cover	1	1	1
08-27.10-121	Beilage, bei Bedarf spacer, when needed			
08-28.10- 15	Stehbolzen bolt	1	1	1
08-28.10- 43	Abdeckklappe cover shield	1	-	-
08-28.10- 44	Gewindestift grub screw	1	-	-
08-28.10- 45	Riegel bar	1	-	-
08-28.10- 48	Rändelknopf knurled knob	1	-	-
08-28.10- 49	Zugfeder tension spring	1	-	-
08-28.10- 60	Scherenprisma prism	1	-	-
08-28.10- 79	Exzenter mit Ansatz eccenter with shoulder	1	-	-
08-28.10- 80	Exenter eccenter	1	-	-
08-28.10- 98	Grundobjektiv built-in lens	1	-	-
08-28.10- 99	Sucherabgang viewfinder exit	1	-	-
08-28.10-161	Abdeckring cover ring	1	-	-
08-28.10-163	Stirnrad, bei Bedarf, Kennzeichen: eingeritztes X auf der Innenfläche, gehört zu Skalenring 08-28.10-168 gear, when needed, mark: engraved X on the inside of the gear, belongs to scale ring 08-28.10-168	1	-	-
08-28.10-164	Führungsring guide ring	1	-	-
08-28.10-165	Führungsbuchse guide bush	1	-	-
08-28.10-166	Konterring / counter ring	1	-	-
08-28.10-168	Skalenring, bei Bedarf, Gravur in Meter und Feet, Kennzeichen: roter Punkt auf der Innenfläche, gehört zu Stirnrad 08-28.10-163 scale ring, when needed, engraved with meters and feet, mark: red point on the inside of the scale ring, belongs to head gear 08-28.10-163	1	-	-
08-28.10-201	Stirnrad, bei Bedarf, gehört zu Skalenring 08-28.10-205 head gear, when needed, belongs to scale ring 08-28.10-205	1	-	-
08-28.10-205	Skalenring, bei Bedarf. Gravur in Meter und Feet, gehört zu Stirnrad 08-28.10-201 scale ring, when needed, engraved with meters and feet, belongs to head gear 08-28.10-201	1	-	-
08-35.10-101	Zwischenring, bei Bedarf intermediate ring, when needed	1	-	-
08-35.10-167	Zapfenschraube screw with pin	1	-	-
305-24.29-1	Blendenmeßwerk diaphragm automatic	1	-	-
15-10.20-8	Zylinderschraube, verchromt cylindrical head screw, chrome-plated	1	1	1

TECHNISCHER KUNDENDIENST

15. 3.65

Ernst Leitz GmbH Wetzlar	LEICINA 8V	Blatt Sheet 10.1

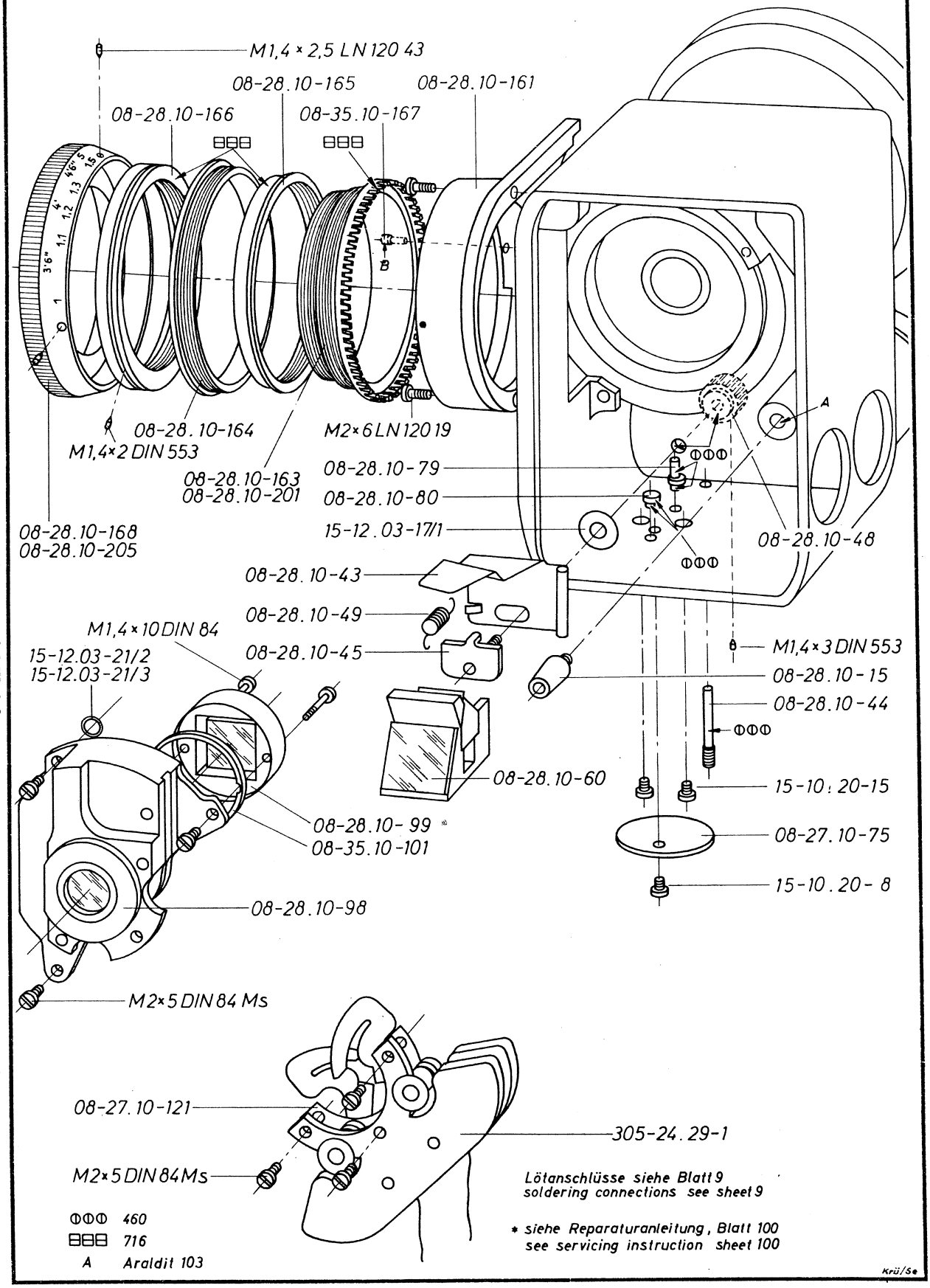

TECHNISCHER KUNDENDIENST

15. 3.65

LEICINA 8V

Ernst Leitz GmbH Wetzlar

Bestell-Nr / Part-No	Benennung / Description	Leicina-Modell 8 V	8 S	8 SV
08-27.10- 10	Beleuchtungsoptik illuminating optics	1	1	1
08-28.10- 16	Beleuchtungsoptik, kompl. illuminating optics, compl.	1	-	-
08-28.10- 35	Zwischenring intermediate ring	1	-	-
08-28.10- 36	Indexring index ring	1	-	-
08-28.10- 54	Haltering retaining ring	1	-	-
08-28.10- 92	Anschlußstutzen locking ring	1	-	-
08-28.10- 93	Sonnenblende, Vorderteil lens hood, front part	1	-	-
08-28.10- 95	Variogon-Vorsatzobjektiv 1:1,8 / 8 - 48 mm lens attachment Variogon 1:1,8 / 8 - 48 mm	1	-	-
08-28.10- 96	Äußerer Objektivtubus outer lens tube	1	-	-
08-28.10-169	Typengravurring, bei Bedarf, bei Bestellung bitte Fabrikations-Nummer angeben engraved ring, when needed, when ordering state serial No	1	-	-
08-28.10-170	Typengravurring, bei Bedarf, bei Bestellung bitte Fabrikations-Nummer angeben engraved ring, when needed, when ordering state serial No	1	-	-
08-28.10-187	Schraube, brüniert screw, burnished	3	-	-
08-28.10-189	Skalenring für Brennweitenverstellung scale ring for adjusting the focus	1	-	-
08-28.10-190	Schutzring protecting ring	1	-	-
08-28.10-191	Zweilochschraube double hole screw	1	-	-
08-35.10- 6	Frontplatte, bei Bestellung bitte Fabrikations-Nummer angeben front plate, when ordering state serial No.	1	-	-
M 1,7 x 2 DIN 553	Gewindestift, brüniert grub screw, burnished	8	-	-

TECHNISCHER KUNDENDIENST

15. 3.65

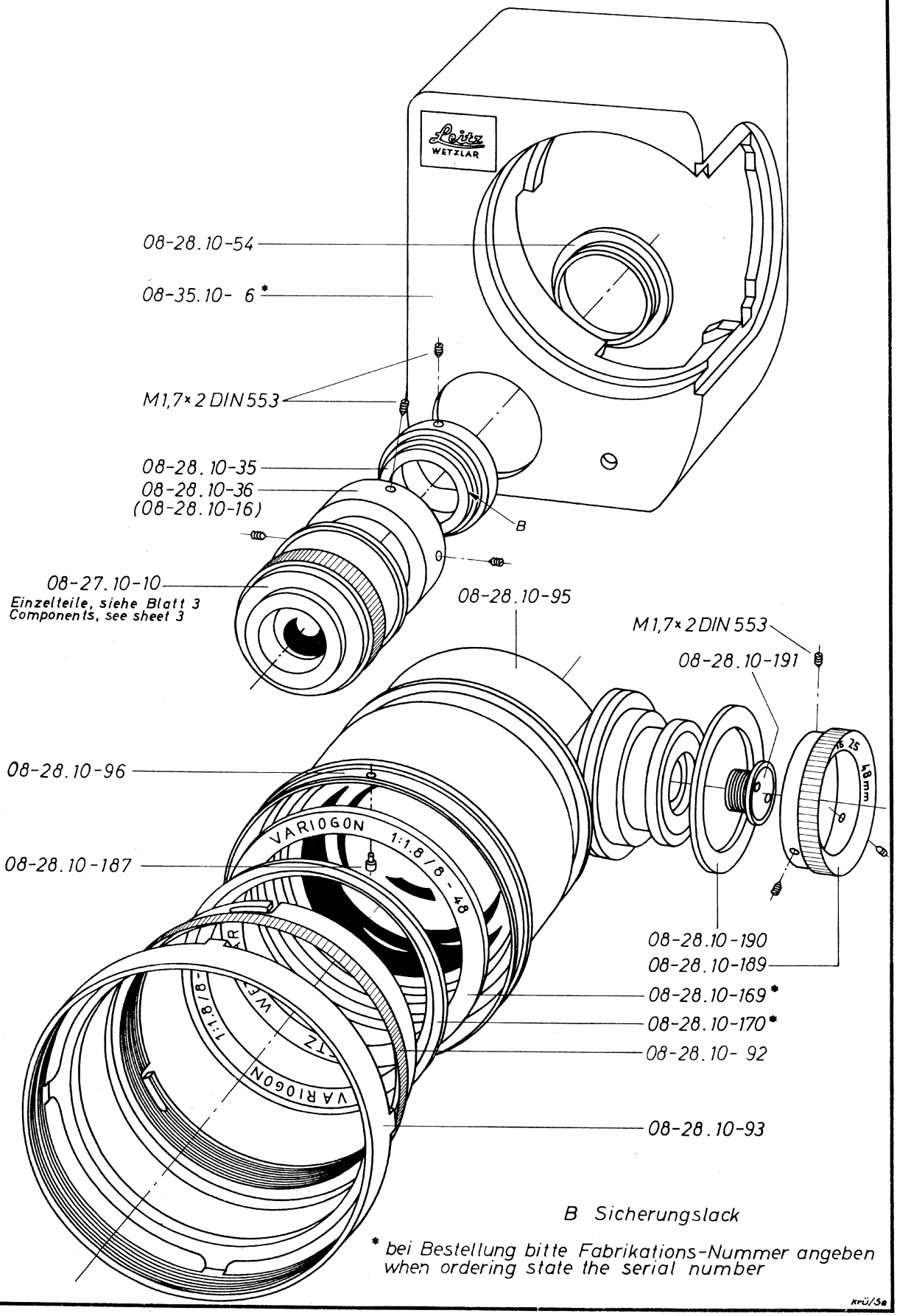

B Sicherungslack

* bei Bestellung bitte Fabrikations-Nummer angeben
when ordering state the serial number

KRÜ/5a

15. 3.65

Ernst Leitz GmbH Wetzlar	LEICINA 8V	Blatt Sheet 12.1		
Bestell-Nr Part-No	Benennung Description	Leicina-Modell 8 V	8 S	8 SV
	Tesafilm 104, schwarz, 15 x 130 mm Tesafilm 104, black, 15 x 130 mm	1	-	1
M 1,7 x 7 DIN 84	Zylinderschraube, brüniert cylindrical head screw, burnished	4	4	4
M 2 x 4 DIN 84	Zylinderschraube, brüniert cylindrical head screw, burnished	4	4	4
M 1,7x2,5 DIN 920	Linsenschraube, brüniert oval head screw, burnished	2	2	2
M 2 x 2 DIN 923	Linsenschraube mit Ansatz, brüniert oval head screw, burnished	1	1	1
1,5 x 5 DIN 1472	Paßkerbstift, brüniert notched dowel pin, burnished	2	2	2
1,5 DIN 6799	Sicherungsscheibe retaining washer	1	1	1
A1,2 x 0,2 x 4,5 DIN 7340	Rohrniet rivet	2	2	2
M2,6x4 LN 120 19	Zylinderschraube, brüniert cylindrical head screw, burnished	6	6	6
15-12.01-11/3	Unterlegscheibe washer	4	4	4
15-12.02-19/1	Unterlegscheibe washer	1	1	1
15-12.03-21/1	Unterlegscheibe washer	1	1	1

Blatt Sheet 12.1	LEICINA 8V	Ernst Leitz GmbH Wetzlar		
Bestell-Nr Part-No	Benennung Description	Leicina-Modell 8 V	8 S	8 SV
08-27.30- 54	Stecker plug	1	1	1
08-27.30-117	Motorlager motor bearing	1	1	1
08-27.30-130	Unterlegblech, magnetisiert plate, magnetized	1	1	1
08-27.30-134	Schalterträger switch frame	1	1	1
08-27.30-135	Schalterträger, kompl. mit Mikroschalter switch frame, compl. with micro switch	1	1	1
08-27.30-138	Stopper-Schaltarm stopper switch arm	1	1	1
08-27.30-139	Feder spring	1	1	1
08-27.30-144	Isolierfolie insulation foil	1	1	1
08-27.30-146	Stopper stopper	1	1	1
08-27.30-160	Kontakthalter contact holder	1	1	1
08-27.30-289	Zwischenrad intermediate wheel	1	1	1
08-30.30 E5	Kabelbaum mit zwei Isolierschläuche cable conduit with two insulating spaghetti	1	-	1
08-30.30 E6- 1	Kabel, blau weiß cable, blue white	1	-	1
08-30.30 E6- 2	Kabel, gelb rot cable, yellow red	1	-	1
08-30.30 E6- 3	Kabel, weiß grün cable, white green	1	-	1
08-30.30 E6- 4	Kabel, grün rot cable, green red	1	-	1
08-30.30 E6- 5	Kabel, gelb braun cable, yellow brown	1	-	1
08-30.30 E6- 6	Kabel, blau braun cable, blue brown	1	-	1
08-30.30 E6- 7	Röhrchen small tube	1	-	1
08-30.30 E6- 8	Kabel, gelb weiß cable, yellow white	2	2	2
08-30.30 E6-10	Kabel, gelb braun cable, yellow brown	1	-	1
08-30.30 E6-11	Kabel, weiß grün cable, white green	1	-	1
08-30.30 E6-14	Isolierschlauch, schwarz insulating spaghetti, black	2	1	2
08-30.30-50	Motorlager mit Motor motor bearing with motor	1	-	1
302-004.038-001	Isolierfolie insulating foil	1	-	1
302-23.45-4	Mikroschalter micro switch	2	2	2
302-050.025-01	Motor, gelötet, mit Kondensator und Widerständen motor, soldered, with condenser and resistances	1	-	1
305-024.027-001	Drehmagnetmeßwerk moving-needle measuring instrument	1	1	1
6,4 µF / 15 V, EL 6,4 /15 D	Kondensator condenser	1	-	1
50 0,3 W ± 10 % Kl 5 ax	Widerstand resistance	2	-	2

TECHNISCHER KUNDENDIENST

15. 3.65

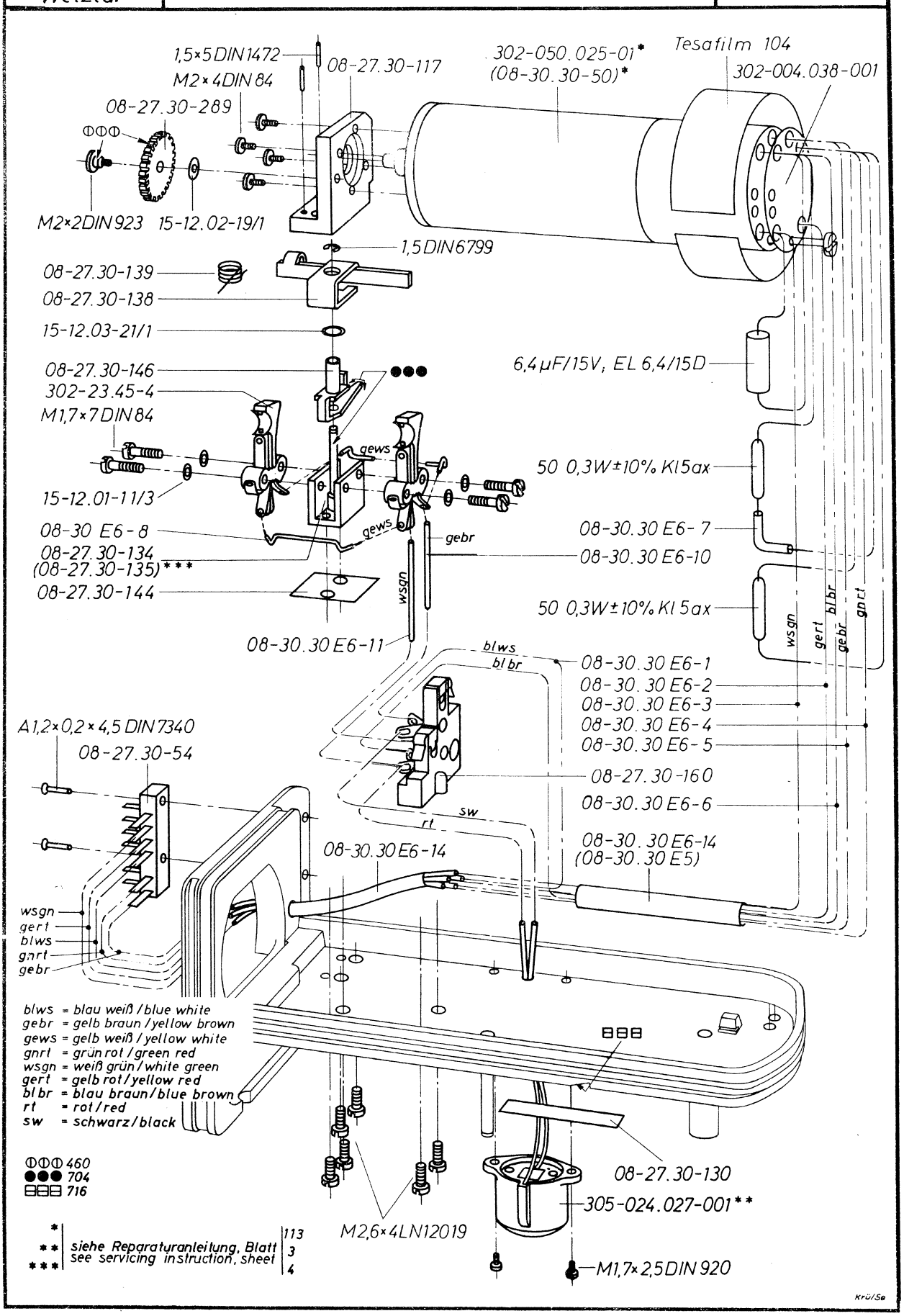

TECHNISCHER KUNDENDIENST

5.12.63

Blatt Sheet 13.2	LEICINA 8SV Prüf 2 ...	Leitz WETZLAR		
Bestell-Nr Part-No	Benennung Description	Leicina-Modell 8 SV	8 S	8 V
08-27.40- 8	Schaltstange switching bar	1	1	1
08-27.40- 9	Druckfeder pressure spring	1	1	1
08-27.40-12	Auslösegriff release handle	1	1	1
08-27.40-20	Profilteil profile plate	1	1	-
08-27.40-30	Achse shaft	1	1	-
08-27.40-34	Abdeckplatte plate	1	1	1
08-27.40-40	Hülse sleeve	2	2	2
08-27.40-41	Druckstift pressure pin	2	2	2
08-27.40-42	Druckfeder pressure spring	2	2	2
08-27.40-43	Drahtauslösernippel, rot ausgelegt wire release nipple, red covered	1	1	1
08-27.40-43	Drahtauslösernippel wire release nipple	1	1	1
08-27.40-44	Anschlagring für Einzelbildschaltung flange ring for single-frame exposure	1	1	1
08-27.40-66	Befestigungsschraube screw	1	1	1
08-27.40-68	Sicherungsscheibe retaining washer	1	1	1
08-27.400-025	Griff handle	1	1	-
08-30.40-17	Rastriegel locking lever	1	1	-
08-30.40-27	Druckknopf press button	1	1	-
08-30.40-28	Riegelfeder locking spring	1	1	-
08-30.400-001	Motordeckel, kompl. engine cowl, compl.	1	-	-
08-30.400-007	Motordeckel engine cowl	1	-	-
15-11.33-5	Mutter nut	1	1	1
15-12.04-8/7	Unterlegscheibe washer	1	1	1
16-14.042-20	Tellerfeder cup spring	7	7	7
1,5 x 6 x 14 DIN 7	Zylinderstift, brüniert cylindrical pin, burnished	1	1	-
2,5 x 10 DIN 1472	Paßkerbstift, verchromt notched dowel pin, chrome-plated	2	2	-
1,4 x 3 DIN 1477	Senkkerbnagel, verchromt countersunk rivet, chrome-plated	2	2	2
1 x 12 DIN 1481	Spannstift, brüniert tension pin, burnished	1	1	1
2,3 DIN 6799	Sicherungsscheibe retaining washer	1	1	1

TECHNISCHER KUNDENDIENST

15. 3.65

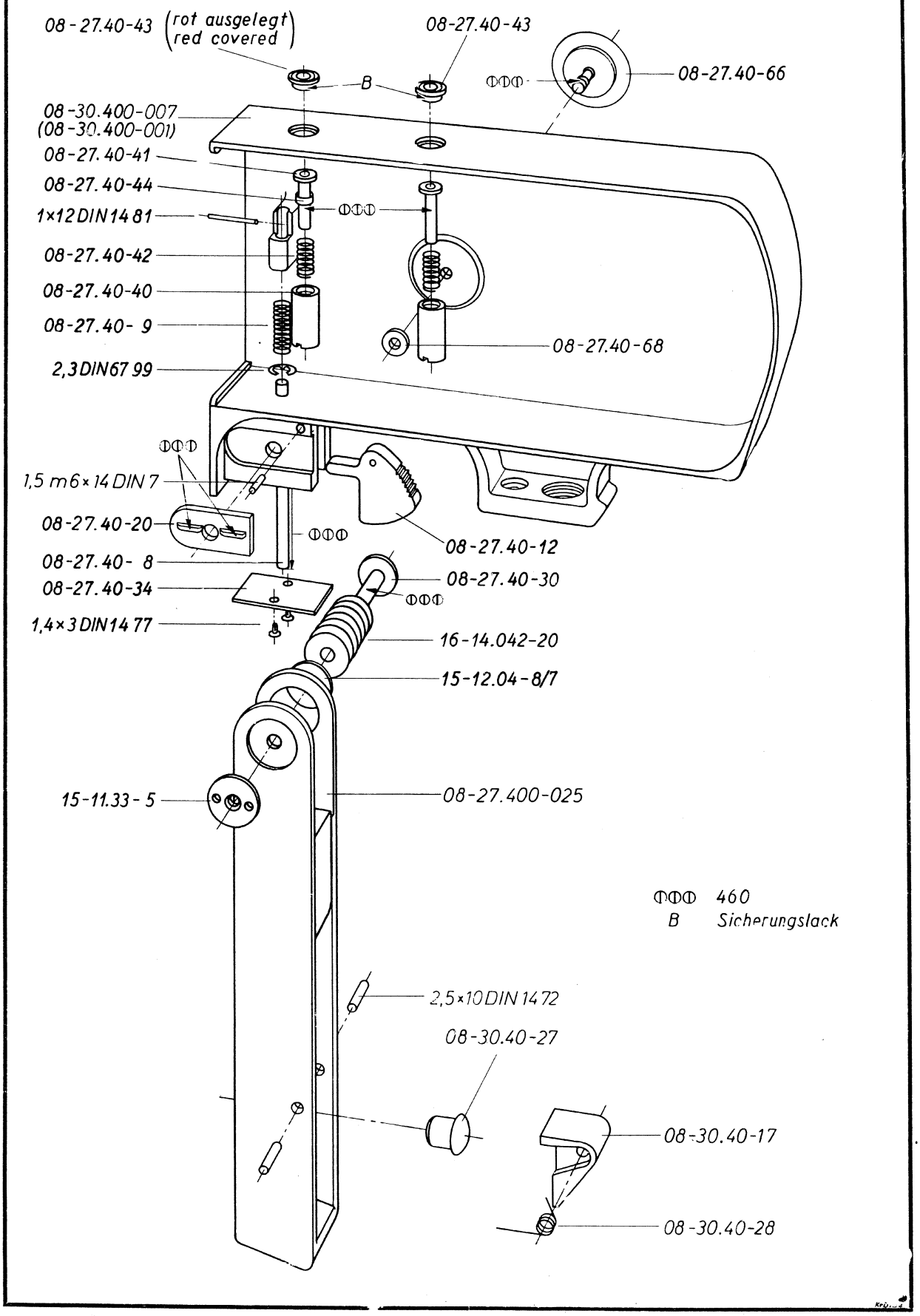

TECHNISCHER KUNDENDIENST

15. 3.65

Blatt / Sheet 13.1

LEICINA 8SV Prüf 1

Leitz WETZLAR

Bestell-Nr Part-No	Benennung Description	Leicina-Modell 8 SV	8 S	8 V
08-27.40- 8	Schaltstange switching bar	1	1	1
08-27.40- 9	Druckfeder pressure spring	1	1	1
08-27.40-12	Auslösegriff release handle	1	1	1
08-27.40-20	Profilteil profile plate	1	1	-
08-27.40-30	Achse shaft	1	1	-
08-27.40-34	Abdeckplatte plate	1	1	1
08-27.40-40	Hülse sleeve	2	2	2
08-27.40-41	Druckstift pressure pin	2	2	2
08-27.40-42	Druckfeder pressure spring	2	2	2
08-27.40-43	Drahtauslösernippel, rot ausgelegt wire release nipple, red covered	1	1	1
08-27.40-43	Drahtauslösernippel wire release nipple	1	1	1
08-27.40-44	Anschlagring für Einzelbildschaltung flange ring for single-frame exposure	1	1	1
08-27.40-66	Befestigungsschraube screw	1	1	1
08-27.40-68	Sicherungsscheibe retaining washer	1	1	1
08-27.400-025	Griff handle	1	1	-
08-30.40- 1	Motordeckel, kompl. engine cowl, compl.	1	-	-
08-30.40- 7	Motordeckel engine cowl	1	-	-
08-30.40-17	Rastriegel locking lever	1	1	-
08-30.40-27	Druckknopf pressure spring	1	1	-
08-30.40-28	Riegelfeder locking spring	1	1	-
08-30.40-37	Rastnippel lock	1	1	1
15-11.33-5	Mutter nut	1	1	1
15-12.04-8/7	Unterlegscheibe washer	1	1	1
16-14.042-20	Tellerfeder cup spring	7	7	7
1,5 m 6 x 14 DIN7	Zylinderstift, brüniert cylindrical pin, burnished	1	1	-
2,5 x 10 DIN 1472	Paßkerbstift, verchromt notched dowel pin, chrome-plated	2	2	-
1,4 x 3 DIN 1477	Senkkerbnagel, verchromt countersunk rivet, chrome-plated	2	2	2
1 x 12 DIN 1481	Spannstift, brüniert tension pin, burnished	1	1	1
2,3 DIN 6799	Sicherungsscheibe retaining washer	1	1	1

TECHNISCHER KUNDENDIENST

15. 3.65

Ernst Leitz GmbH Wetzlar	LEICINA 8SV Prüf 1	Blatt Sheet 13.1

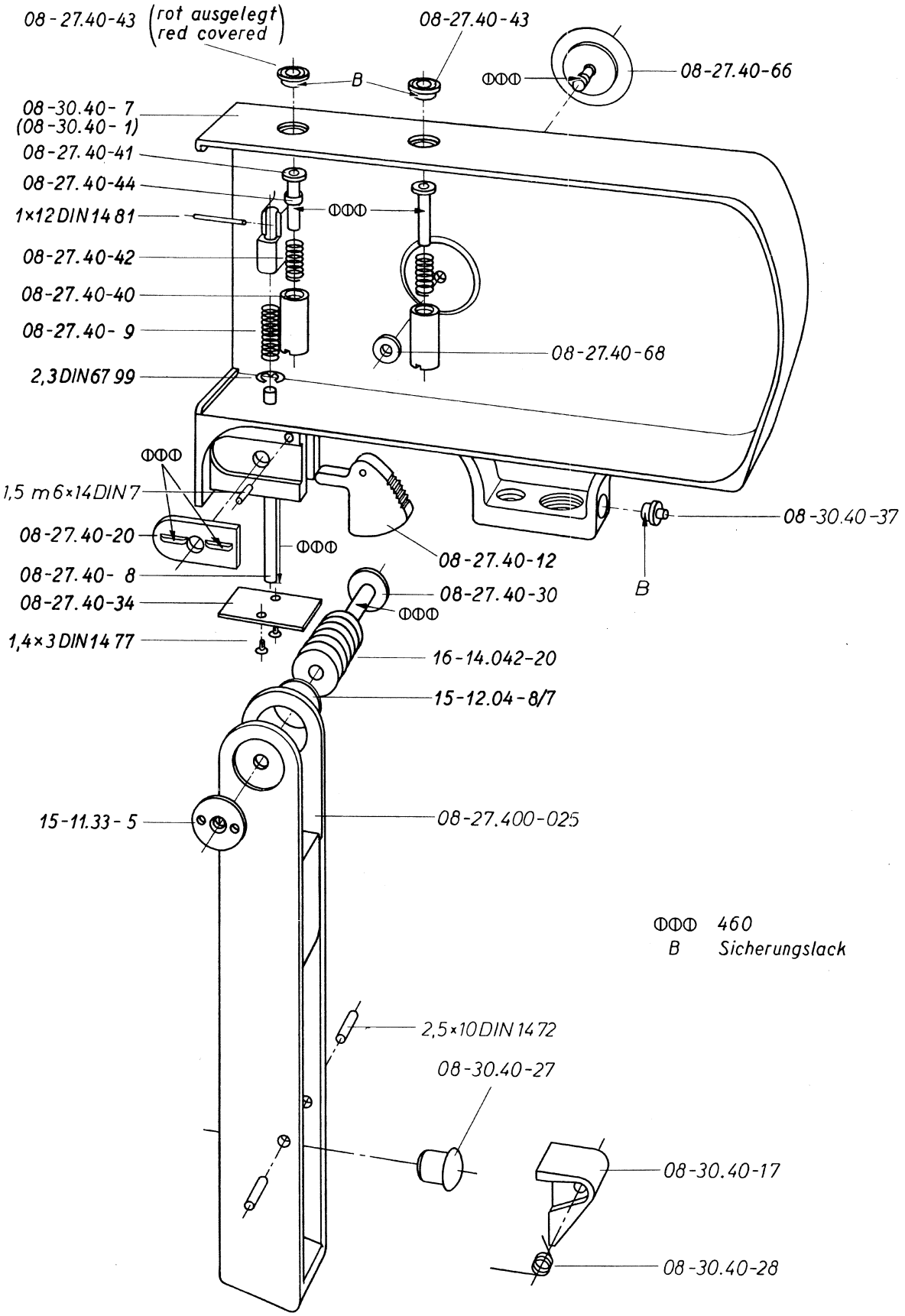

TECHNISCHER KUNDENDIENST

15. 3.65

Leitz WETZLAR

LEICINA 8SV Prüf 2...

Blatt / Sheet 14.2

Bestell-Nr / Part-No	Benennung / Description	Leicina-Modell 8 SV	8 S	8 V
08-30.20-20	Maskenrohr graduated dial tube	1	-	-
08-30.20-22	Hülse sleeve	1	-	-
08-30.20-25	Maskenscheibe (nur für Leicina 8 SV) graduated dial (for Leicina 8 SV only)	1	-	-
08-30.200-1	Spulendeckel, kompl. mit allen auf diesem Blatt dargestellten Teilen spool cover, compl. with all parts shown on this sheet	1	-	-
1 m 6 x 8 DIN 7	Zylinderstift, brüniert cylindrical pin, burnished	1	1	1
1 m 6 x 10 DIN 7	Zylinderstift, brüniert cylindrical pin, burnished	1	1	1
M1,4 x 2,5 DIN65	Senkschraube, brüniert countersunk screw, burnished	2	2	2
M1,4 x 3,5 DIN65	Senkschraube, brüniert countersunk screw, burnished	1	-	-
M 1,7 x 2,5 DIN 551	Gewindestift, brüniert grub screw, burnished	3	3	3
M 2 x 3 DIN 551	Gewindestift, brüniert grub screw, burnished	1	1	1
M 2 x 6 DIN 551	Gewindestift, brüniert grub screw, burnished	2	2	2
M 2,6 x 4 DIN 551	Gewindestift, brüniert grub screw, burnished	1	1	1
1,9 DIN 6799	Sicherungsscheibe retaining washer	2	2	2
15-12.03-40/4	Unterlegscheibe, brüniert washer, burnished	1	1	1
1[illegible]-12.06-14.12	Unterlegscheibe washer	1	1	1

TECHNISCHER KUNDENDIENST

Blatt Sheet 14.2	LEICINA 8SV Prüf 2 ...	Leitz WETZLAR		
Bestell-Nr Part-No	Benennung Description	Leicina-Modell 8 SV	8 S	8 V
08-27.20- 16	Typenschild „Leicina" name plate	1	1	1
08-27.20- 28	Vorschraubring retaining ring	1	1	1
08-27.20- 31	Linse lens	1	1	1
08-27.20- 34	Nullinse zero lens	1	1	1
08-27.20- 36	Vorschraubring retaining ring	1	1	1
08-27.20- 52	Rolle roll	1	1	1
08-27.20- 53	Drehfeder spring	1	1	1
08-27.20- 67	Linse lens	1	1	1
08-27.20- 70	Hülse sleeve	1	1	1
08-27.20- 71	Linse lens	1	1	1
08-27.20- 72	Vorschraubring retaining ring	1	1	1
08-27.20- 73	Bremsnippel brake nipple	1	1	1
08-27.20- 85	Stirnstütze head rest	1	1	1
08-27.20- 87	Druckfeder pressure spring	3	3	3
08-27.20- 89	Nummernschild, bei Bestellung Fabrikations-Nr. angeben number plate, when ordering this part the serial number must be staded	1	1	1
08-27.20- 90	Scheibe disc	2	2	2
08-27.20-102	Riegelknopf locking knob	1	1	1
08-27.20-103	Griffstück handle piece	1	1	1
08-27.20-104	Riegel [illegible] bar	1	1	1
08-27.20-105	[illegible]	1	1	1
08-27.20-107	Zylinderstift cylindrical pin	1	1	1
08-27.200-005	Spulendeckel mit Typenschild „Leicina" spool cover with name plate	1	-	-
08-27.200-045	Filmuhr, kompl. mit Rolle, Drehfeder und Zylinderstifte film counter, compl. with roll, spring and cylindrical pins	1	-	-
08-27.200-060	Augenmuschel cup of the eyepiece	1	1	1
08-27.200-061	Haltering retaining ring	1	-	-
08-27.200-065	Okular, kompl. ohne Augenmuschel und Haltering eyepiece, compl. without cup of the eyepiece and retaining ring	1	-	-
08-27.200-066	Okularrohr eyepiece tube	1	-	-
08-30.20-19	Maskenrohr, kompl. graduated dial tube, compl.	1	-	-

TECHNISCHER KUNDENDIENST

30. 9. 65

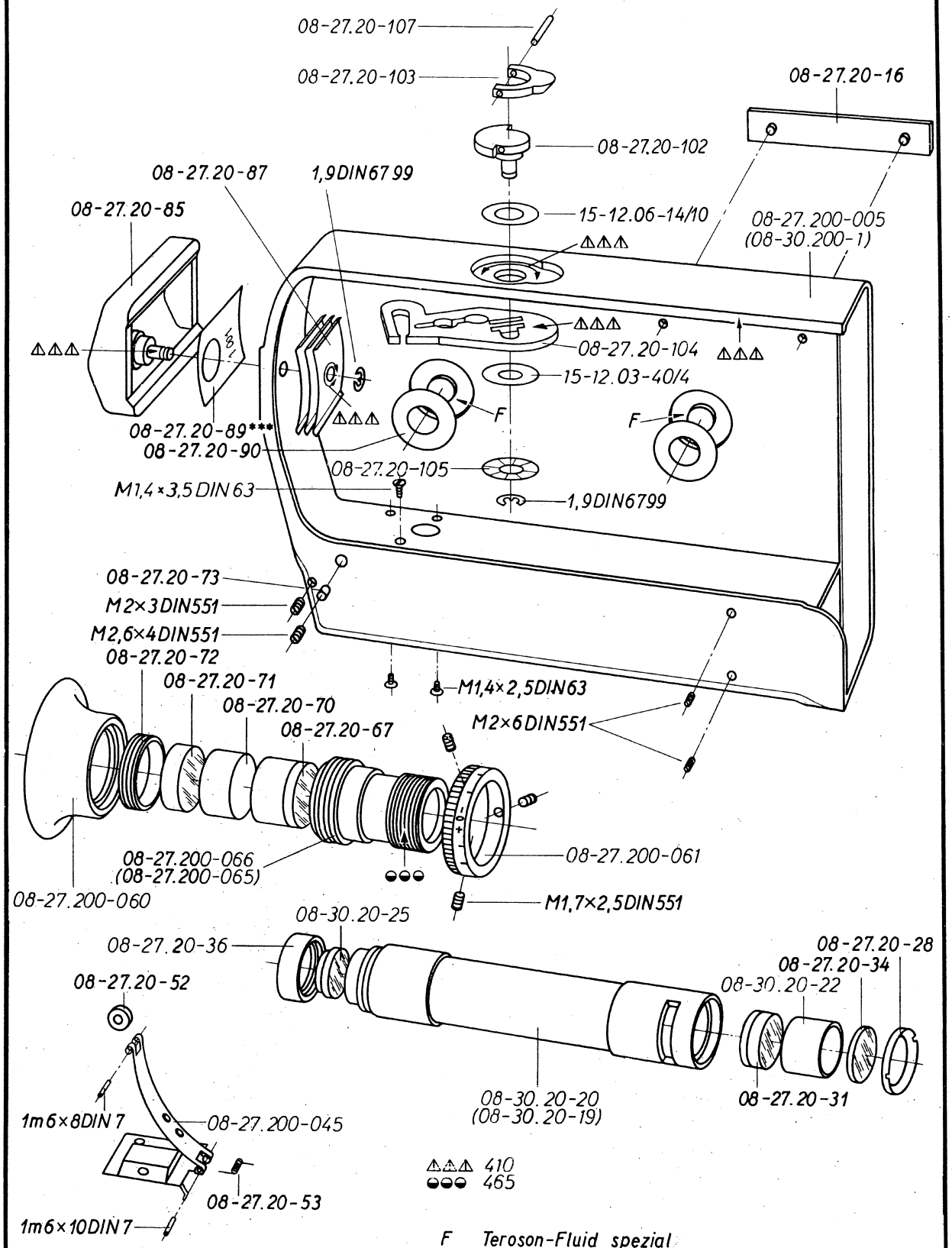

△△△ 410
●●● 465

F Teroson-Fluid spezial

* siehe Reparaturanleitung, Blatt 13
see servicing instruction, sheet 13

** siehe Reparaturanleitung, Blatt 51
see servicing instruction, sheet 51

*** bei Bestellung Kamera-Nummer angeben
when ordered this part, the number of the camera must be stated

Krü/50

30. 9. 65

Leitz WETZLAR

LEICINA 8SV Prüf 1

Blatt / Sheet 14.1

Bestell-Nr / Part-No	Benennung / Description	Leicina-Modell 8 SV	8 S	8 V
08-30.20-1	Spulendeckel, kompl. mit allen auf diesem Blatt dargestellten Teilen spool cover, compl. with all parts shown on this sheet	1	-	-
08-30.20-19	Maskenrohr, kompl. graduated dial tube, compl.	1	-	-
08-30.20-20	Maskenrohr graduated dial tube	1	-	-
08-30.20-22	Hülse sleeve	1	-	-
08-30.20-25	Maskenscheibe (nur für Leicina 8 SV) graduated dial (for Leicina 8 SV only)	1	-	-
1 m 6 x 8 DIN 7	Zylinderstift, brüniert cylindrical pin, burnished	1	1	1
1 m 6 x 10 DIN 7	Zylinderstift, brüniert cylindrical pin, burnished	1	1	1
M1,4x2,5 DIN 63	Senkschraube, brüniert countersunk screw, burnished	2	2	2
M1,7 x2,5 DIN 551	Gewindestift, brüniert grub screw, burnished	3	3	3
M 2 x 3 DIN 551	Gewindestift, brüniert grub screw, burnished	1	1	1
M 2 x 6 DIN 551	Gewindestift, brüniert grub screw, burnished	2	2	2
M2,6x4 DIN 551	Gewindestift, brüniert grub screw, burnished	1	1	1
1,9 DIN 6799	Sicherungsscheibe retaining washer	2	2	2
15-12,03-40/4	Unterlegscheibe, brüniert washer, burnished	1	1	1
15-12,03-1-/10	Unterlegscheibe washer	1	1	1

Blatt Sheet 14.1	LEICINA 8SV Prüf 1	Leitz WETZLAR		
Bestell-Nr Part-No	Benennung Description	Leicina-Modell 8 SV	8 S	8 V
08-27.20- 16	Typenschild „Leicina" name plate	1	1	1
08-27.20- 23	Dichtungswinkel, bei Bedarf light shield, when needed	1	1	1
08-27.20- 28	Vorschraubring retaining ring	1	1	1
08-27.20- 31	Linse lens	1	1	1
08-27.20- 34	Nullinse zero lens	1	1	1
08-27.20- 36	Vorschraubring retaining ring	1	1	1
08-27.20- 45	Filmuhr, kompl. mit Rolle, Drehfeder und Zylinderstifte film counter, compl. with roll, spring and cylindrical pins	1	1	1
08-27.20- 52	Rolle roll	1	1	1
08-27.20- 53	Drehfeder spring	1	1	1
08-27.20- 62	Haltering retaining ring	1	1	1
08-27.20- 65	Okular, kompl. ohne Augenmuschel und Haltering eyepiece, compl. without cup of the eyepiece and retaining ring	1	1	1
08-27.20- 66	Okularrohr eyepiece tube	1	1	1
08-27.20- 67	Linse lens	1	1	1
08-27.20- 70	Hülse sleeve	1	1	1
08-27.20- 71	Linse lens	1	1	1
08-27.20- 72	Vorschraubring retaining ring	1	1	1
08-27.20- 73	Bremsnippel brake nipple	1	1	1
08-27.20- 85	Stirnstütze head rest	1	1	1
08-27.20- 87	Druckfeder pressure spring	3	3	3
08-27.20- 89	Nummernschild, bei Bestellung Fabrikations-Nr. angeben number plate, when ordering this part the serial number must be stated	1	1	1
08-27.20- 90	Scheibe disc	2	2	2
08-27.20-100	Spulendeckel mit Typenschil „Leicina" spool cover with name plate	1	1	1
08-27.20-102	Riegelknopf locking knob	1	1	1
08-27.20-103	Griffstück handle piece	1	1	1
08-27.20-104	Riegel / bar	1	1	1
08-27.20-105	Federscheibe / spring washer	1	1	1
08-27.20-107	Zylinderstift cylindrical pin	1	1	1
08-27.20-060	Augenmuschel cup of the eyepiece	1	1	1

TECHNISCHER KUNDENDIENST

30. 9.65

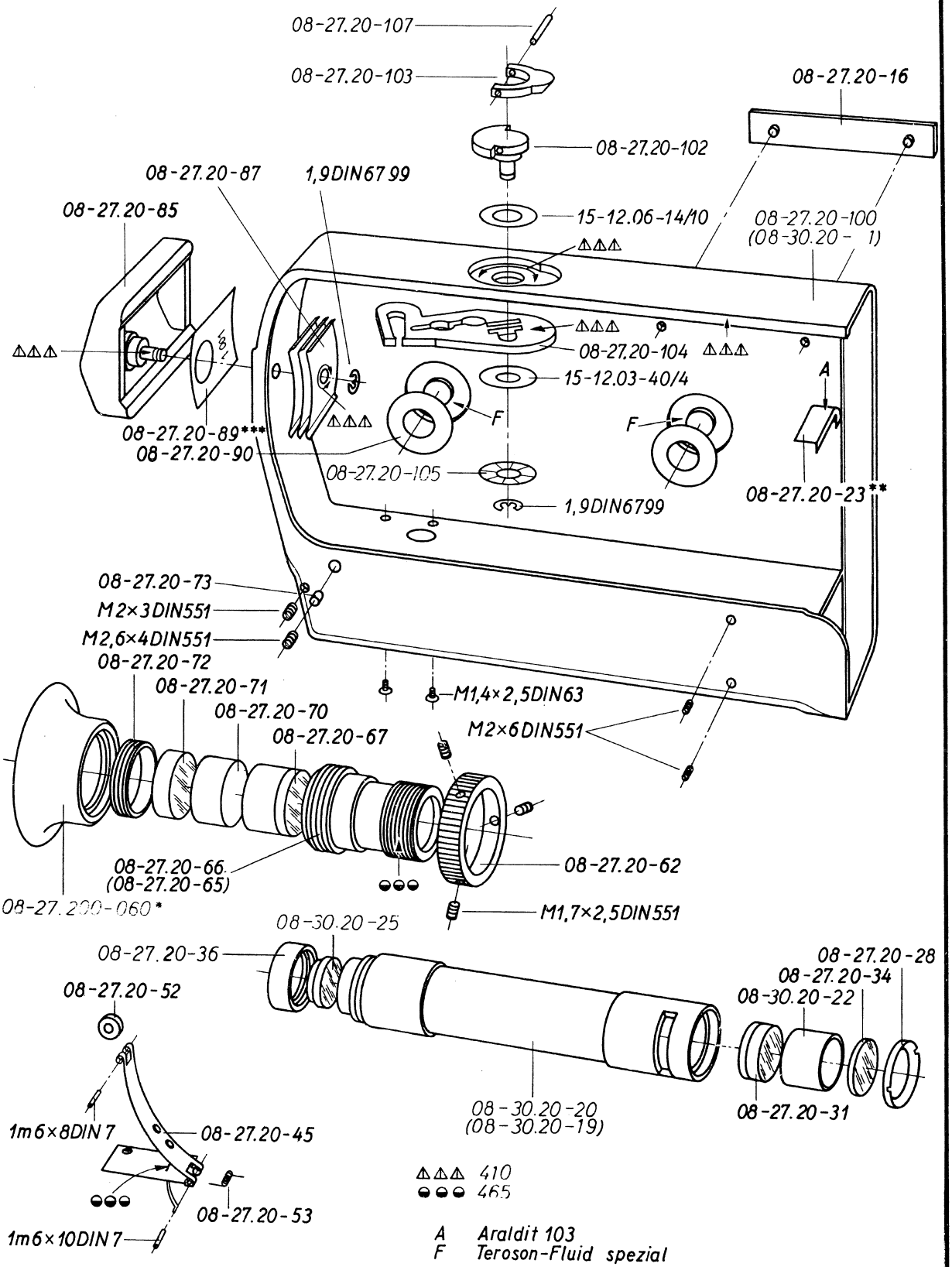

TECHNISCHER KUNDENDIENST

30. 9. 65

△△△ 410
◒◒◒ 465

A Araldit 103
F Teroson-Fluid spezial

* siehe Reparaturanleitung, Blatt 13
see servicing instruction, sheet 13

** siehe Reparaturanleitung, Blatt 51
see servicing instruction, sheet 51

*** bei Bestellung Kamera-Nummer angeben
when ordered this part, the number of the camera must be stated

KrÜ/Se

Blatt Sheet 15.3	LEICINA 8SV Prüf 3...	Leitz WETZLAR		
Bestell-Nr Part-No	Benennung Description	Leicina-Modell 8 SV	8 S	8 V
08-27.10- 37	Batteriehalter battery holder	1	1	1
08-27.10- 45	Batterieknopf battery knob	1	1	1
08-27.10- 48	Halter mit Fotowiderstand (dunkel lagern) holder with photoresistance (store in a dark place)	1	1	-
08-30.10- 85	Objektivrohr mounting for built-in lens	1	-	-
08-30.10- 88	Grundobjektiv built-in lens	1	-	-
08-30.10-109	Vorschraubring retaining ring	1	-	-
08-30.10-117	Verstellknopf adjusting knob	1	-	-
08-30.10-118	Abdeckfolie, selbstklebend corer foil, self-sealing	1	-	1
08-30.10-119	Rastfeder spring catch	1	-	1
08-30.10-150	Vorschraubring retaining ring	1	-	1
08-30.10-151	Anschlagschraube stop screw	1	-	1
08-30.100- 89	Objektivrohr mit Grundobjektiv und Prismenfassung lens mounting with built-in lens and prism mounting	1	-	-
08-30.100- 92	Prismenfassung mit Prismen prism mounting with pirsm	1	-	-
08-30.102-110	Gedruckte Schaltung printed circuit	1	-	-
305-024.030-1	Blendenmeßwerk diaphragm automatic	1	-	-
M1,4 x 4 DIN 84	Zylinderschraube, brüniert cylindrical head screw, burnished	2	-	-
M 2 x 6 DIN 84 Ms	Zylinderschraube, gebeizt cylindrical head screw, corroded	1	-	-
M1,7 x 20 DIN 920	Linsenschraube oval head screw	1	-	1
2 x 6 DIN 1472	Paßkerbstift, brüniert notched dowel pin, burnished	2	-	-

TECHNISCHER KUNDENDIENST

30. 9.65

Ernst Leitz GmbH Wetzlar	LEICINA 8SV Prüf 3 ...	Blatt Sheet 15.3

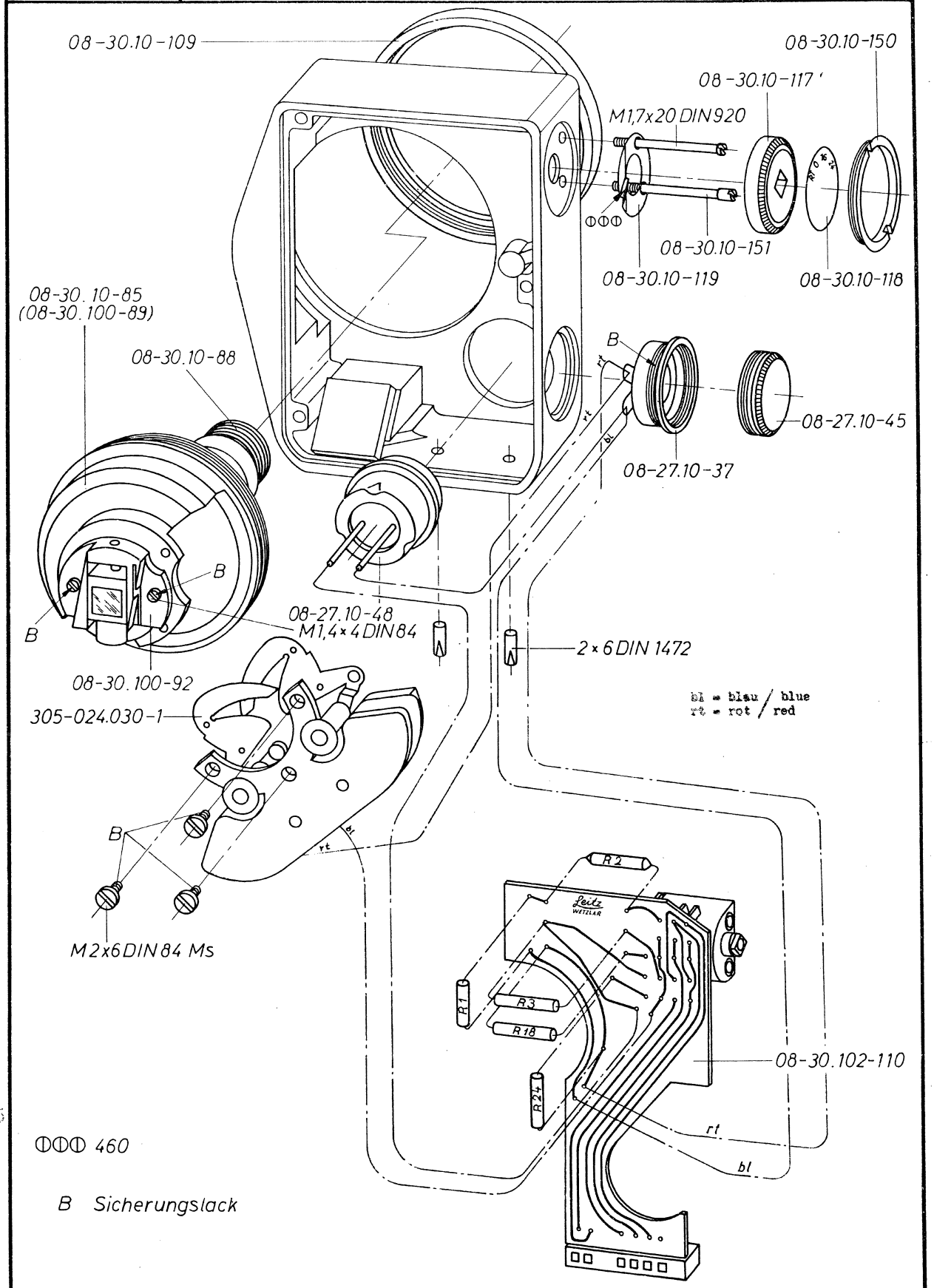

30. 9.65

⦶⦶⦶ 460

B Sicherungslack

Blatt Sheet 15.2	LEICINA 8SV Prüf 2	Leitz WETZLAR		
Bestell-Nr Part-No	Benennung Description	Leicina-Modell 8 SV	8 S	8 V
08-27.10- 37	Batteriehalter battery holder	1	1	1
08-27.10- 45	Batterieknopf battery knob	1	1	1
08-27.10- 48	Halter mit Fotowiderstand (dunkel lagern) holder with photoresistance (store in a dark place)	1	1	-
08-27.10-138	Kontakthalter contact holder	1	1	1
08-27.10-139	Kontaktfeder contact spring	6	6	6
08-27.10-140	Isolierplatte isulation plate	1	1	1
08-30.10- 85	Objektivrohr mounting for built-in lens	1	-	-
08-30.10- 88	Grundobjektiv built-in lens	1	-	-
08-30.10-109	Vorschraubring retaining ring	1	-	-
08-30.10-114	Befestigungswinkel mit Lötleiste angle with soldering ledge	1	-	-
08-30.10-117	Verstellknopf adjusting knob	1	-	-
08-30.10-118	Abdeckfolie, selbstklebend corer foil, self-sealing	1	-	1
08-30.10-119	Rastfeder spring catch	1	-	1
08-30.10-128	Tesaband / cello	1	-	1
08-30.10-150	Vorschraubring / retaining ring	1	-	1
08-30.10-151	Anschlagschraube stop screw	1	-	1
08-30.100- 89	Objektivrohr mit Grundobjektiv und Prismenfassung lens mounting with built-in lens and prism	1	-	-
08-30.100- 92	Prismenfassung mit Prismen mounting prism mounting with prism	1	-	-
08-30.100-112	Stufenschalter mit Kabelbaum und Befestigungswinkel speed setting switch with cable conduit and angle	1	-	-
302-23.90-01	Stufenschalter speed setting switch	1	-	1
305-024.030-1	Blendenmeßwerk diaphragm automatic	1	-	-
M1,4 x 4 DIN 84	Zylinderschraube, brüniert cylindrical head screw, burnished	2	-	-
M1,4 x 6 DIN 84	Zylinderschraube, brüniert cylindrical head screw, burnished	2	2	2
M 2 x 6 DIN 84 Ms	Zylinderschraube, gebeizt cylindrical head screw, corroded	1	-	-
M 1,4 DIN 546	Schlitzmutter, gebeizt slotted nut, corroded	2	2	2
M1,7 x 20 DIN 920	Linsenschraube oval head screw	1	-	1
15-12.02-17/6	Unterlegscheibe, Zelluloid washer, celluloid	2	-	4

TECHNISCHER KUNDENDIENST

30. 9.65

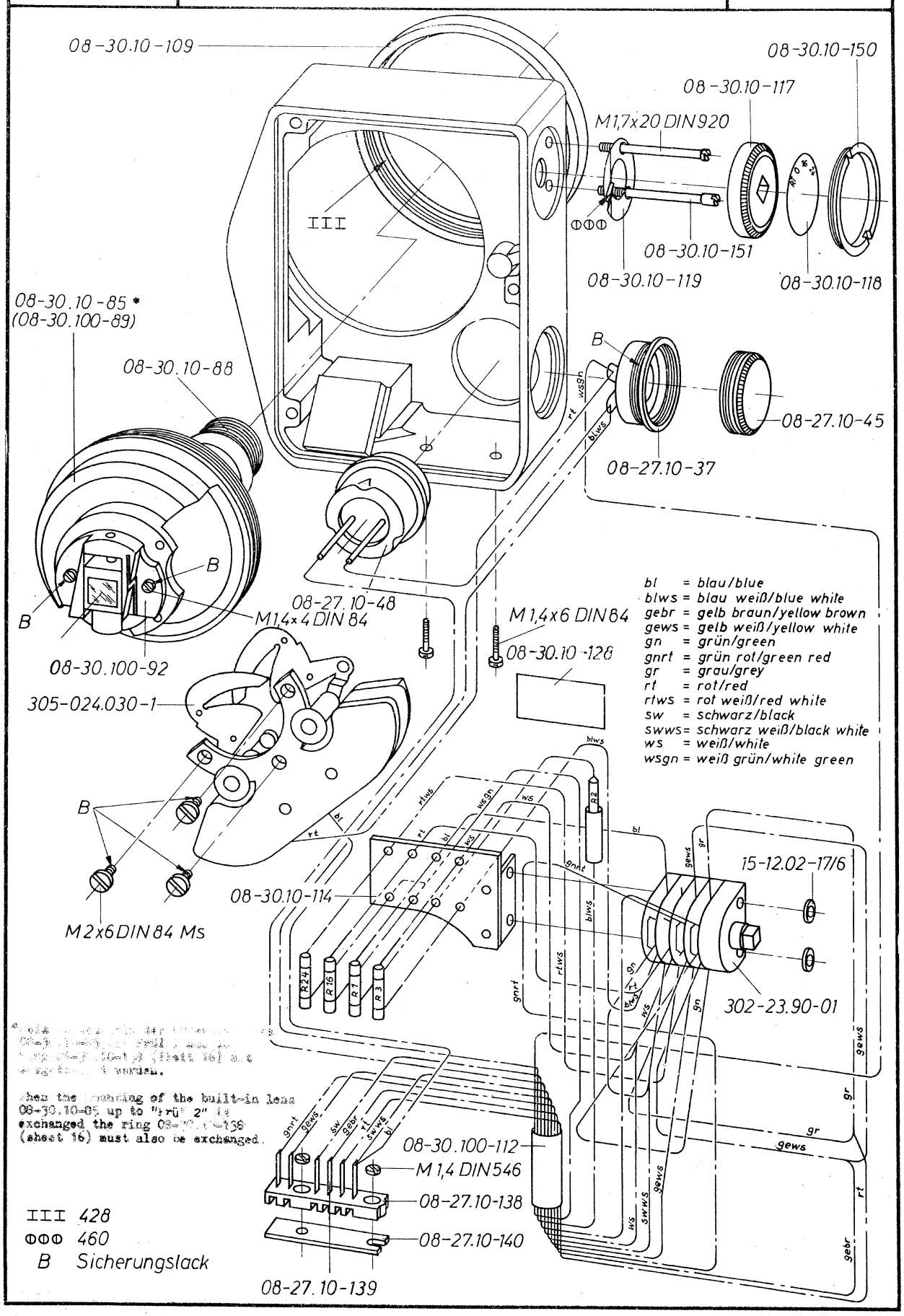

TECHNISCHER KUNDENDIENST

30. 9. 65

When the mounting of the built-in lens 08-30.10-85 up to "Prüf 2" is exchanged the ring 08-[illegible]-138 (sheet 16) must also be exchanged.

Leitz WETZLAR

LEICINA 8SV Prüf 1...

Blatt / Sheet 15.1

Bestell-Nr / Part-No	Benennung / Description	Leicina-Modell 8 SV	8 S	8 V
560 KΩ 5 % 5 DIN 41 399				
680 KΩ 5 % 5 DIN 41 399				
820 KΩ 5 % 5 DIN 41 399				
1 MΩ 5 DIN 41 399				

Blatt Sheet 15.1	LEICINA 8SV Prüf 1...	Leitz WETZLAR

Bestell-Nr Part-No	Benennung Description	Leicina-Modell 8 SV	8 S	8 V
16 KΩ 0,33 W LCA 0,33 ± 10 % Klasse 5 axial	Schichtwiderstand R 2 Layer resistance R 2	1	-	-
1,0 KΩ 5 % 5 DIN 41 399	Schichtwiderstand R 1 (je nach Meßergebnis wird 1 Stück von 1 KO bis 13 KO benötigt) Layer resistance R 1 (according to the respective measurement result, 1 piece 1 KO to 13 KO is required)	nach Bedarf when needed		
1,1 KΩ 5 % 5 DIN 41 399				
1,2 KΩ 5 % 5 DIN 41 399				
1,3 KΩ 5 % 5 DIN 41 399				
1,5 KΩ 5 % 5 DIN 41 399				
1,6 KΩ 5 % 5 DIN 41 399				
1,8 KΩ 5 % 5 DIN 41 399				
2,0 KΩ 5 % 5 DIN 41 399				
2,2 KΩ 5 % 5 DIN 41 399				
2,4 KΩ 5 % 5 DIN 41 399				
2,7 KΩ 5 % 5 DIN 41 399				
3,0 KΩ 5 % 5 DIN 41 399				
3,3 KΩ 5 % 5 DIN 41 399				
3,6 KΩ 5 % 5 DIN 41 399				
3,9 KΩ 5 % 5 DIN 41 399				
4,3 KΩ 5 % 5 DIN 41 399				
4,7 KΩ 5 % 5 DIN 41 399				
5,1 KΩ 5 % 5 DIN 41 399				
5,6 KΩ 5 % 5 DIN 41 399				
6,2 KΩ 5 % 5 DIN 41 399				
6,8 KΩ 5 % 5 DIN 41 399				
7,5 KΩ 5 % 5 DIN 41 399				
8,2 KΩ 5 % 5 DIN 41 399				
9,1 KΩ 5 % 5 DIN 41 399				
10 KΩ 5 % 5 DIN 41 399				
11 KΩ 5 % 5 DIN 41 399				
12 KΩ 5 % 5 DIN 41 399				
13 KΩ 5 % 5 DIN 41 399	Schichtwiderstand R 3 (je nach Meßergebnis wird 1 Stück von 13 KO bis 39 KO benötigt) Layer resistance R 3 (according to the respective measurement result, 1 piece 13 KO to 39 KO is required)	nach Bedarf when needed		
15 KΩ 5 % 5 DIN 41 399				
16 KΩ 5 % 5 DIN 41 399				
18 KΩ 5 % 5 DIN 41 399				
20 KΩ 5 % 5 DIN 41 399				
22 KΩ 5 % 5 DIN 41 399				
24 KΩ 5 % 5 DIN 41 399				
27 KΩ 5 % 5 DIN 41 399				
30 KΩ 5 % 5 DIN 41 399				
33 KΩ 5 % 5 DIN 41 399				
36 KΩ 5 % 5 DIN 41 399				
39 KΩ 5 % 5 DIN 41 399				
43 KΩ 5 % 5 DIN 41 399	Schichtwiderstand R 16, R 24 (je nach Meßergebnis wird 1 Stück von 4,7 KO bis 1 MO benötigt) Layer resistance R 16, R 24 (according to the respective measurement result, 1 piece 4.7 KO to 1 MO is required)	nach Bedarf when needed		
47 KΩ 5 % 5 DIN 41 399				
51 KΩ 5 % 5 DIN 41 399				
56 KΩ 5 % 5 DIN 41 399				
62 KΩ 5 % 5 DIN 41 399				
68 KΩ 5 % 5 DIN 41 399				
75 KΩ 5 % 5 DIN 41 399				
82 KΩ 5 % 5 DIN 41 399				
91 KΩ 5 % 5 DIN 41 399				
100 KΩ 5 % 5 DIN 41 399				
120 KΩ 5 % 5 DIN 41 399				
150 KΩ 5 % 5 DIN 41 399				
180 KΩ 5 % 5 DIN 41 399				
220 KΩ 5 % 5 DIN 41 399				
270 KΩ 5 % 5 DIN 41 399				
330 KΩ 5 % 5 DIN 41 399				
390 KΩ 5 % 5 DIN 41 399				
470 KΩ 5 % 5 DIN 41 399				

TECHNISCHER KUNDENDIENST

15. 3.65

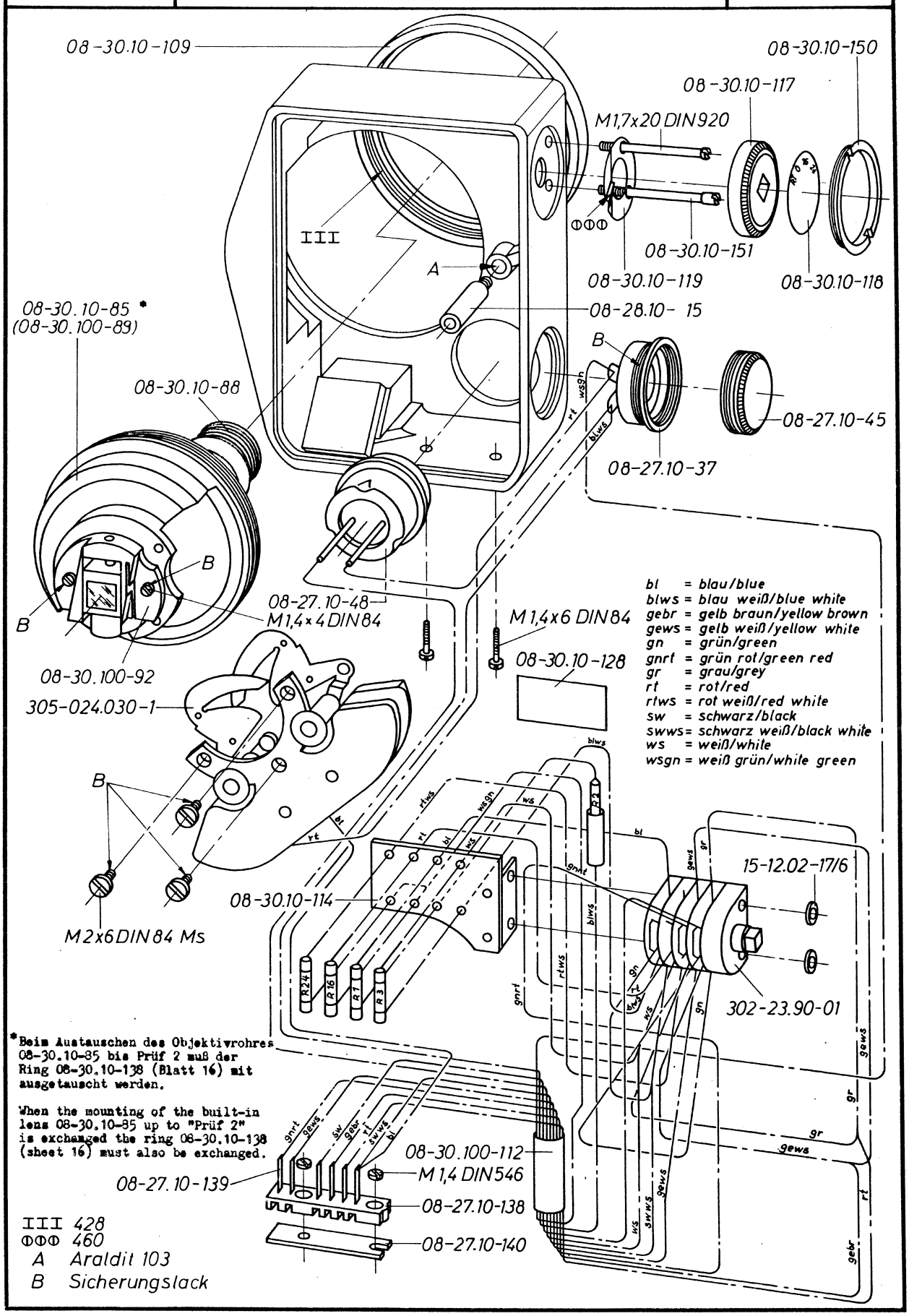

*Beim Austauschen des Objektivrohres 08-30.10-85 bis Prüf 2 muß der Ring 08-30.10-138 (Blatt 16) mit ausgetauscht werden.

When the mounting of the built-in lens 08-30.10-85 up to "Prüf 2" is exchanged the ring 08-30.10-138 (sheet 16) must also be exchanged.

TECHNISCHER KUNDENDIENST

30. 9. 65

Blatt / Sheet 16.2

LEICINA 8SV Prüf 2

Leitz WETZLAR

Bestell-Nr Part-No	Benennung Description	Leicina-Modell 8 SV	8 S	8 V
08-27.10- 10	Beleuchtungsoptik, kompl. illuminating optics, compl.	1	1	-
08-27.10- 34	Haltering retaining ring	1	1	-
08-27.10- 64	Spiegelstuhl, kompl. mit Spiegel mirror support, compl. with mirror	1	1	-
08-27.10- 67	Spiegel mirror	1	1	-
08-27.10- 68	Spiegelstuhl mirror support	1	1	-
08-27.10- 71	Kegel-Druckfeder pressure spring	1	1	-
08-27.10- 73	Kalotte calotte	1	1	-
08-27.10- 75	Abdeckblech cover plate	1	1	-
08-30.10-136	Vorschraubring retaining ring	1	-	-
08-30.10-138	Zwischenring intermediate ring	1	-	-
08-30.90-004	Filterhalter filter holder	1	-	-
08-30.90-005	Gegenlichtblende lens hood	1	-	-
08-30.90-006	Objektiv-Deckel lens cover	1	-	-
08-30.100-006	Frontplatte SV front plate SV	1	-	-
08-30.100-078	Variovorsatz, schwarz, ohne 08-30.10-136 und 08-30.10-138 zoom-attachment, black, without 08-30.10-136 and 08-30.10-138	1	-	-
101-22 V 142	Gewindestift / grub screw	3	-	-
101-22 V 241	Gewindestift / grub screw	3	-	-
101-58.25 429	Feineinstellring fine adjusting ring	1	-	-
101-58.25 431	Gravurring zum Fokussieren engraved ring	1	-	-
101-58.25 432	Schaltring zum Fokussieren focusing ring	1	-	-
101-58.25 434	Schalthebel zum Fokussieren focusing lever	1	-	-
15-10.20-8	Zylinderkopfschraube, brüniert cylindrical head cap screw, burnished	1	1	-
15-10.264-8	Senkschraube, gebeizt countersunk screw, corroded	1	1	-
15-12.20-8/1	Scheibe washer	1	1	-
M2,6 x 5 DIN 553	Gewindestift, brüniert grub screw, burnished	3	3	-

TECHNISCHER KUNDIENST

30. 9.65

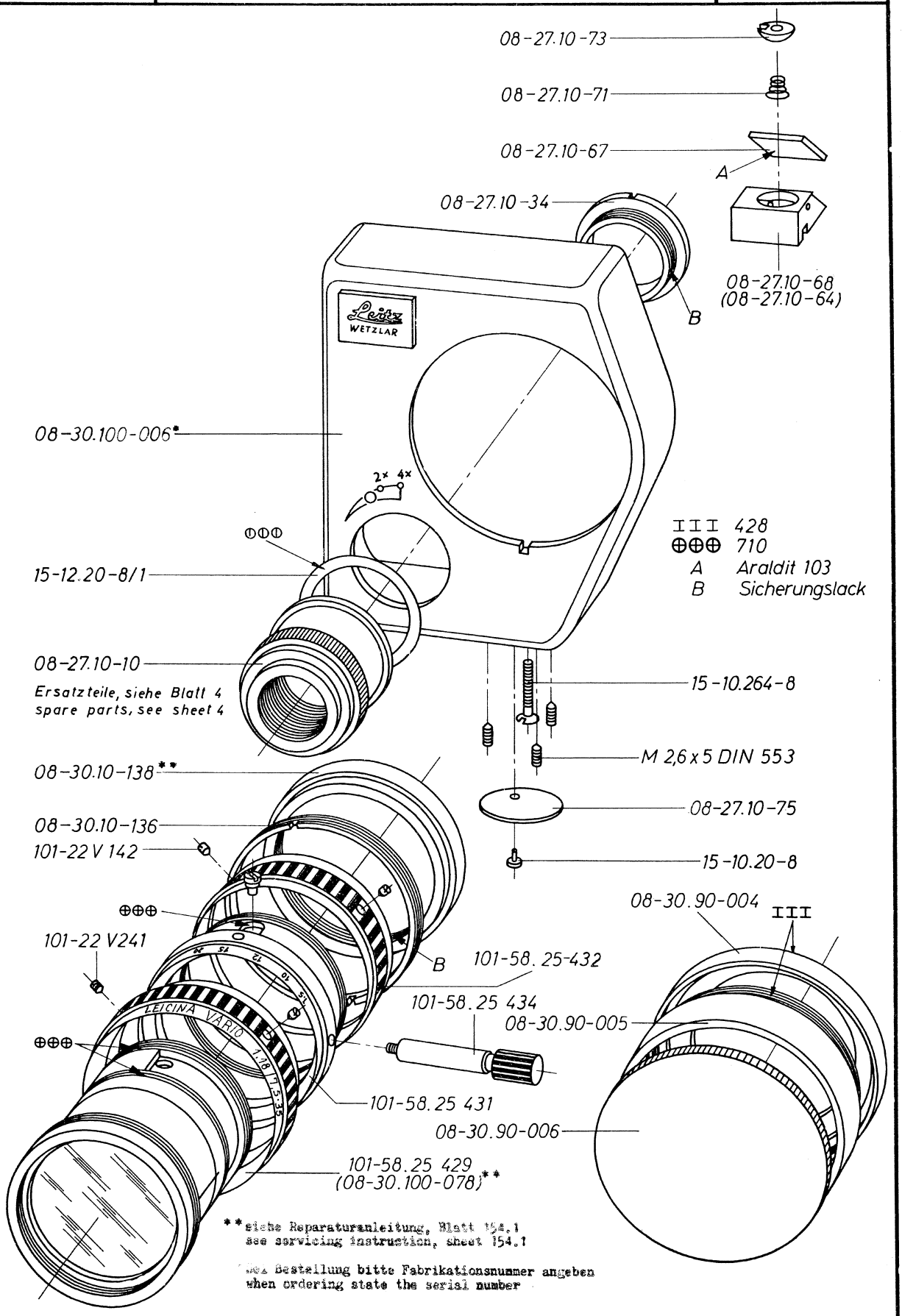

** siehe Reparaturanleitung, Blatt 154.1
see servicing instruction, sheet 154.1

Bei Bestellung bitte Fabrikationsnummer angeben
when ordering state the serial number

30. 9.65

Blatt Sheet 16.1	LEICINA 8SV Prüf 1	Leitz WETZLAR		
Bestell-Nr Part-No	Benennung Description	Leicina-Modell 8 SV	8 S	8 V
08-27.10- 10	Beleuchtungsoptik, kompl. illuminating optics, compl.	1	1	-
08-27.10- 34	Haltering retaining ring	1	1	-
08-27.10- 64	Spiegelstuhl, kompl. mit Spiegel mirror support, compl. with mirror	1	1	-
08-27.10- 67	Spiegel mirror	1	1	-
08-27.10- 68	Spiegelstuhl mirror support	1	1	-
08-27.10- 71	Kegel-Druckfeder pressure spring	1	1	-
08-27.10- 73	Kalotte calotte	1	1	-
08-27.10- 75	Abdeckblech cover plate	1	1	-
08-30.10- 6	Frontplatte SV front plate SV	1	-	-
08-30.10-134	Variovorsatz, Chromausführung ist nicht mehr lieferbar. Bei Neubestellung Variovorsatz, schwarz 08-30.100-078 (Blatt 16.2) bestellen zoom-attachment in chrome is not available anymore. Please order zoom-attachment, black 08-30.100-078 (sheet 16.2)	1	-	-
08-30.10-136	Vorschraubring / retaining ring	1	-	-
08-30.10-138	Zwischenring / intermediate ring	1	-	-
08-30.90-005	Gegenlichtblende lens hood	1	-	-
08-30.90-006	Objektiv-Deckel lens cover	1	-	-
101-22.20 626	Feineinstellring fine adjusting ring	1	-	-
101-22.20 636	Gravurring zum Fokussieren engraved ring	1	-	-
101-22.21 633	Schalthebel zum Fokussieren focusing lever	1	-	-
101-22.22 972	Schaltring zum Fokussieren focusing ring	1	-	-
101-22 V 142	Gewindestift grub screw	3	-	-
101-22 V 241	Gewindestift grub screw	3	-	-
15-10.20-8	Zylinderkopfschraube, brüniert cylindrical head cap screw, burnished	1	1	-
15-10.264-8	Senkschraube, gebeizt countersunk screw, corroded	1	1	-
15-12.20-8/1	Scheibe washer	1	1	-
M 2,6 x 5 DIN 553	Gewindestift, brüniert grub screw, burnished	3	3	-

TECHNISCHER KUNDENDIENST

30. 9.65

Ernst Leitz GmbH Wetzlar	LEICINA 8SV Prüf 1	Blatt Sheet 16.1

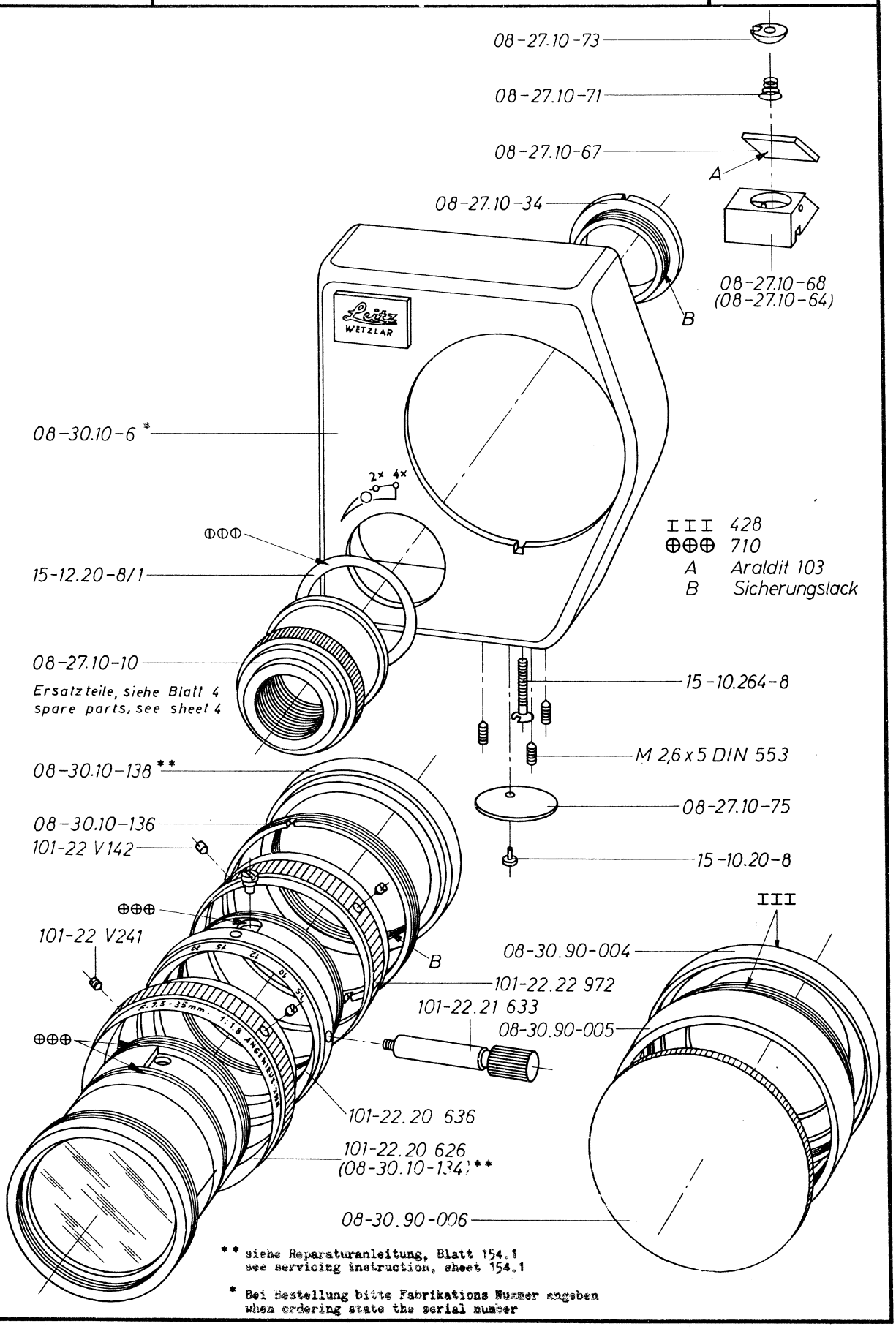

** siehe Reparaturanleitung, Blatt 154.1
see servicing instruction, sheet 154.1

* Bei Bestellung bitte Fabrikations Nummer angeben
when ordering state the serial number

TECHNISCHER KUNDENDIENST

30. 9. 65

Blatt / Sheet 17.3 LEICINA 8SV Prüf 3...

Leitz WETZLAR

Teile-Nr. / Part-No.	Benennung / Description	Leicina-Modell 8 SV	8 S	8 V
08-27.30-50	Blendenhebel, hinten bearing of the diaphragm shaft, behind	1	1	1
08-27.30-84	Blendenlagerbuchse bush of the diaphragm shaft	1	1	1
08-27.30-93	Stahlfeder flat spring	1	1	1
08-27.30-94	Sperrung pawl plate	1	1	1
08-27.30-100	Blendenlager, vorn bearing of the diaphragm shaft, ahead	1	1	1
08-27.30-176	Filzschnurstreifen plush strip	1	1	1
08-27.30-177	Filzschnurstreifen plush strip	1	1	1
08-27.30-192	Schutzblech protective cover	1	1	1
08-27.30-203	Hebel lever	1	1	1
08-27.30-205	Drehfeder tension spring	1	1	1
08-27.30-260	Blendenachse diaphragm shaft	1	1	1
08-30.302-008	Platine plate	1	-	-
08-30.302-155	Abdeckfolie, selbstklebend cover foil, self-sealing	1	1	1
M 3 x 6 DIN 63	Senkschraube, brüniert countersunk screw, burnished	1	1	1
M 1,7 x 2 DIN 84	Zylinderschraube, gebeizt cylindrical head screw, corroded	1	1	1
M 1,7 x 3 DIN 84	Zylinderschraube, brüniert cylindrical head screw, burnished	1	1	1
M 1,7 x 4 DIN 84	Zylinderschraube, brüniert cylindrical head screw, burnished	3	3	3
M 2,5 x 12 DIN 84	Zylinderschraube, brüniert cylindrical head screw, burnished	2	2	2
M 3 x 6 DIN 84	Zylinderschraube, brüniert cylindrical head screw, burnished	1	1	1
M 2 x 4 DIN 551	Gewindestift, brüniert grub screw, burnished	1	1	1
M 2,6 x 15 DIN 933	Sechskantschraube, brüniert hexagon screw, burnished	1	1	1
1,5 x 5 DIN 1472	Kerbstift, brüniert notched dowel pin, burnished	4	4	4
1,5 x 10 DIN 1472	Kerbstift, brüniert notched dowel pin, burnished	4	2	4
1 x 5 DIN 1481	Spannstift split pin	1	1	1
M2,6x08 LN 120 19	Zylinderschraube, brüniert cylindrical head screw, burnished	2	2	2
M1 x 28 LN 120 19	Zylinderschraube, brüniert, bei Bedarf cylindrical head screw, burnished, when needed			

TECHNISCHER KUNDENDIENST

30. 9.65

Ernst Leitz GmbH Wetzlar	LEICINA 8SV Prüf 3...	Blatt Sheet 17.3

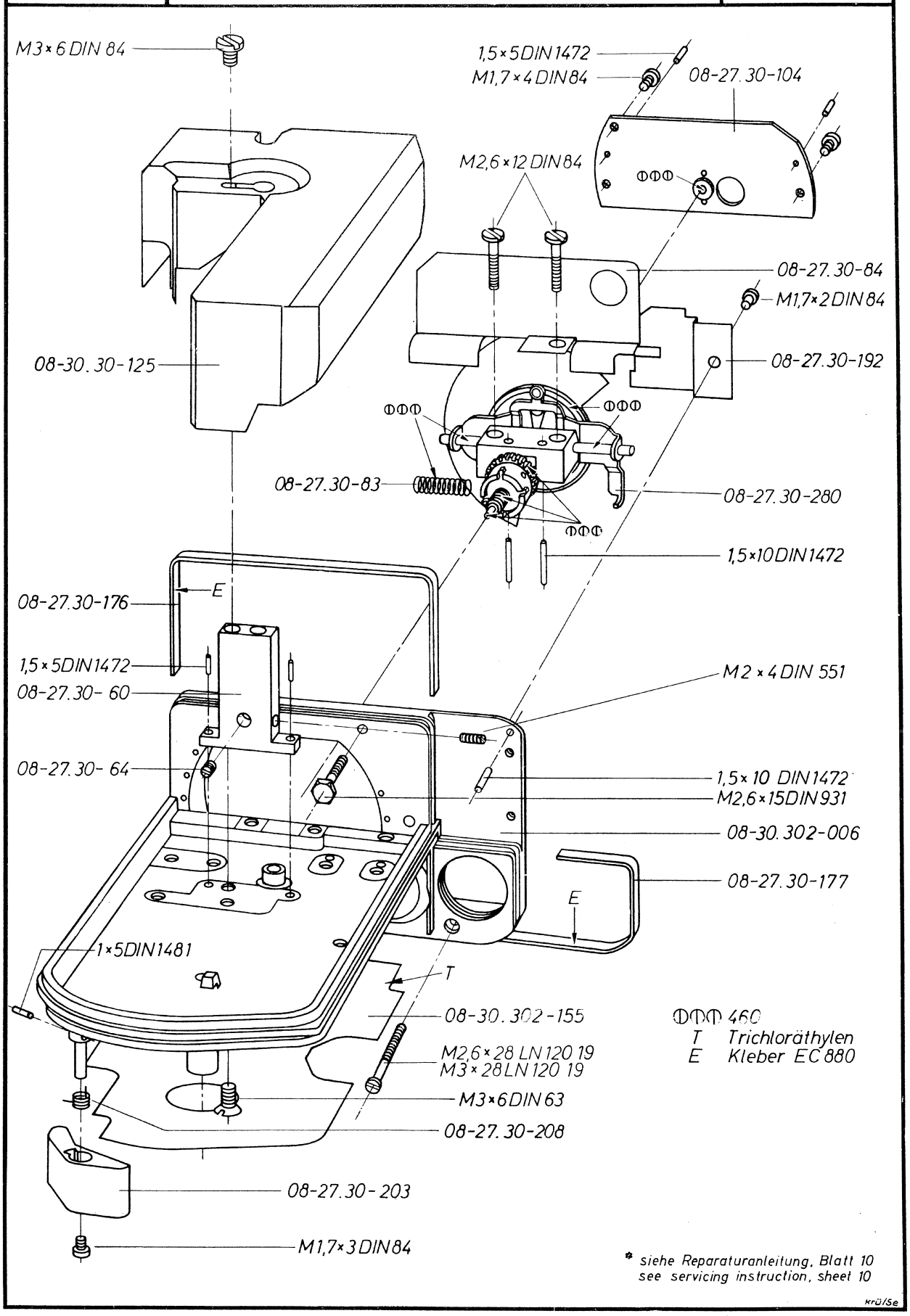

15. 3. 65

Blatt Sheet 17.2	LEICINA 8SV Prüf 2	Leitz WETZLAR		
Bestell-Nr Part-No	Benennung Description	Leicina-Modell 8 SV	8 S	8 V
08-27.30- 60	Blendelager, hinten bearing of the diaphragm shaft, behind	1	1	1
08-27.30- 64	Blendenlagerbuchse bush of the diaphragm shaft	1	1	1
08-27.30- 83	Greiferfeder claw spring	1	1	1
08-27.30- 84	Abdeckung guard plate	1	1	1
08-27.30-104	Blendenlager, vorn bearing of the diaphragm shaft, ahead	1	1	1
08-27.30-176	Plüschstreifen plush strip	1	1	1
08-27.30-177	Plüschstreifen plush strip	1	1	1
08-27.30-192	Abdeckblech protective cover	1	1	1
08-27.30-203	Hebel lever	1	1	1
08-27.30-208	Drehfeder tension spring	1	1	1
08-27.30-262	Abdeckfolie, selbstklebend corer foil, self-sealing	1	1	1
08-27.30-280	Blendenachse diaphragm shaft	1	1	1
08-27.301-006	Platine plate	1	-	-
08-30.30-125	Abdeckblech protective cover	1	-	1
M1,7x2 DIN 84	Zylinderschraube, gebeizt cylindrical head screw, corroded	1	1	1
M 1,7 x 3 DIN 84	Zylinderschraube, brüniert cylindrical head screw, burnished	1	1	1
M 1,7 x 4 DIN 84	Zylinderschraube, brüniert cylindrical head screw, burnished	3	3	3
M 3 x 6 DIN 84	Zylinderschraube, brüniert cylindrical head screw, burnished	1	1	1
M 2 x 4 DIN 551	Gewindestift, brüniert grub screw, burnished	1	1	1
M2,6x28 LN 120 19	Zylinderschraube, brüniert cylindrical head screw, burnished	2	2	2
M 3 x 28 LN 120 19	Zylinderschraube, brüniert, bei Bedarf cylindrical head screw, burnished, when needed			
M2,6x12 DIN 84	Zylinderschraube, brüniert cylindrical head screw, burnished	2	2	2
M 3 x 6 DIN 63	Senkschraube, brüniert countersunk screw, burnished	1	1	1
1,5 x 5 DIN 1472	Paßkerbstift, brüniert notched dowel pin, burnished	4	4	4
1,5 x 10 DIN 1472	Paßkerbstift, brüniert notched dowel pin, burnished	4	2	4
1 x 5 DIN 1481	Spannstift split pin	1	1	1
M2,6x15 DIN 931	Sechskantschraube, brüniert hexagon screw, burnished	1	1	1

TECHNISCHER KUNDENDIENST

30. 9.65

Ernst Leitz GmbH Wetzlar	LEICINA 8SV Prüf 2	Blatt Sheet 17.2

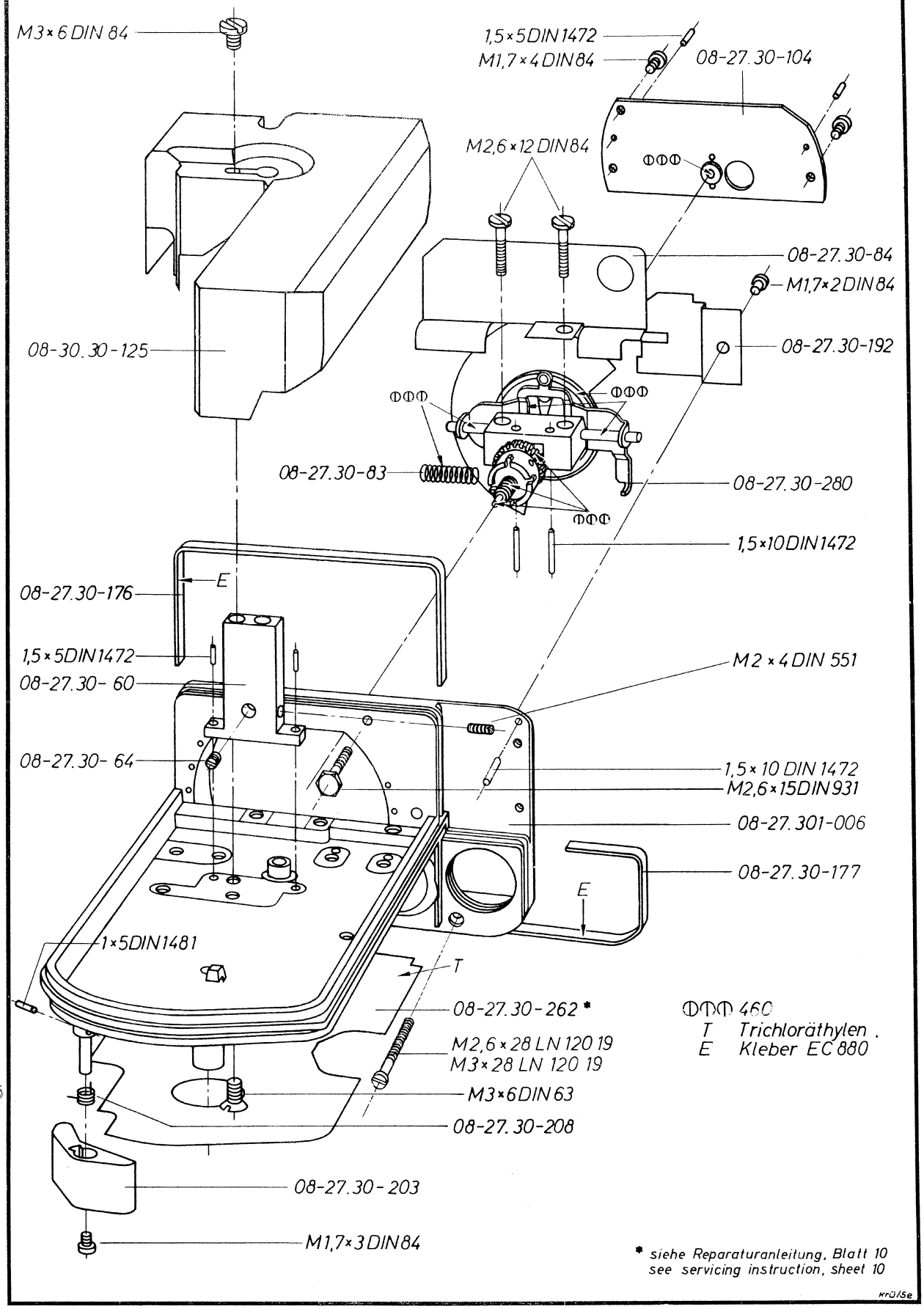

15. 3. 65

Blatt Sheet 17.1	LEICINA 8SV Prüf 1	Leitz WETZLAR		
Bestell-Nr Part-No	Benennung Description	Leicina-Modell 8SV	8 S	8 V
08-27.30- 60	Blendenlager, hinten bearing of the diaphragm shaft, behind	1	1	1
08-27.30- 64	Blendenlagerbuchse bush of the diaphragm shaft	1	1	1
08-27.30- 83	Greiferfeder claw spring	1	1	1
08-27.30- 84	Abdeckung guard plate	1	1	1
08-27.30-104	Blendenlager, vorn bearing of the diaphragm shaft, ahead	1	1	1
08-27.30-176	Plüschstreifen plush strip	1	1	1
08-27.30-177	Plüschstreifen plush strip	1	1	1
08-27.30-192	Abdeckblech protective cover	1	1	1
08-27.30-203	Hebel lever	1	1	1
08-27.30-208	Drehfeder tension spring	1	1	1
08-27.30-262	Abdeckfolie, selbstklebend cover foil, self-sealing	1	1	1
08-27.30-267	Platine plate	1	1	1
08-27.30-280	Blendenachse diaphragm shaft	1	1	1
08-30.50-185	Abdeckblech (nur für Leicina 8 V und 8 SV) protective cover (for Leicina 8 V and 8 SV only)	1	-	1
15-12.03-32/6	Unterlegscheibe, 0,2 mm dick, bei Bedarf, gebeizt washer, 0.2 mm thick, when needed, corroded	1	1	1
15-12.03-32/7	Unterlegscheibe, 0,3 mm dick, bei Bedarf, gebeizt washer, 0.3 mm thick, when needed, corroded	1	1	1
15-12.03-32/8	Unterlegscheibe, 0,5 mm dick, bei Bedarf, gebeizt washer, 0.5 mm thick, when needed, corroded	1	1	1
M 3 x 6 DIN 63	Senkschraube, brüniert countersunk screw, burnished	1	1	1
M 1,7 x 2 DIN 84	Zylinderschraube, gebeizt cylindrical head screw, corroded	1	1	1
M 1,7 x 3 DIN 84	Zylinderschraube, brüniert cylindrical head screw, burnished	1	1	1
M 1,7 x 4 DIN 84	Zylinderschraube, brüniert cylindrical head screw, burnished	3	3	3
M2,6 x 12 DIN 84	Zylinderschraube, brüniert cylindrical head screw, burnished	2	2	2
M 3 x 6 DIN 84	Zylinderschraube, brüniert cylindrical head screw, burnished	1	1	1
M 2 x 4 DIN 551	Gewindestift, brüniert grub screw, burnished	1	1	1
M2,6x15 DIN 931	Sechskantschraube, brüniert hexagon screw, burnished	1	1	1
1,5 x 5 DIN 1472	Paßkerbstift, brüniert notched dowel pin, burnished	4	4	4
1,5 x 10 DIN 1472	Paßkerbstift, brüniert notched dowel pin, burnished	4	2	4
1 x 5 DIN 1481	Spannstift split pin	1	1	1
M2,6x28 LN 120 19	Zylinderschraube, brüniert cylindrical head screw, burnished	2	2	2
M 3 x 28 LN 120 19	Zylinderschraube, brüniert, bei Bedarf cylindrical head screw, burnished, when needed			

TECHNISCHER KUNDENDIENST

30. 9.65

Ernst Leitz GmbH Wetzlar	LEICINA 8SV Prüf 1	Blatt Sheet 17.1

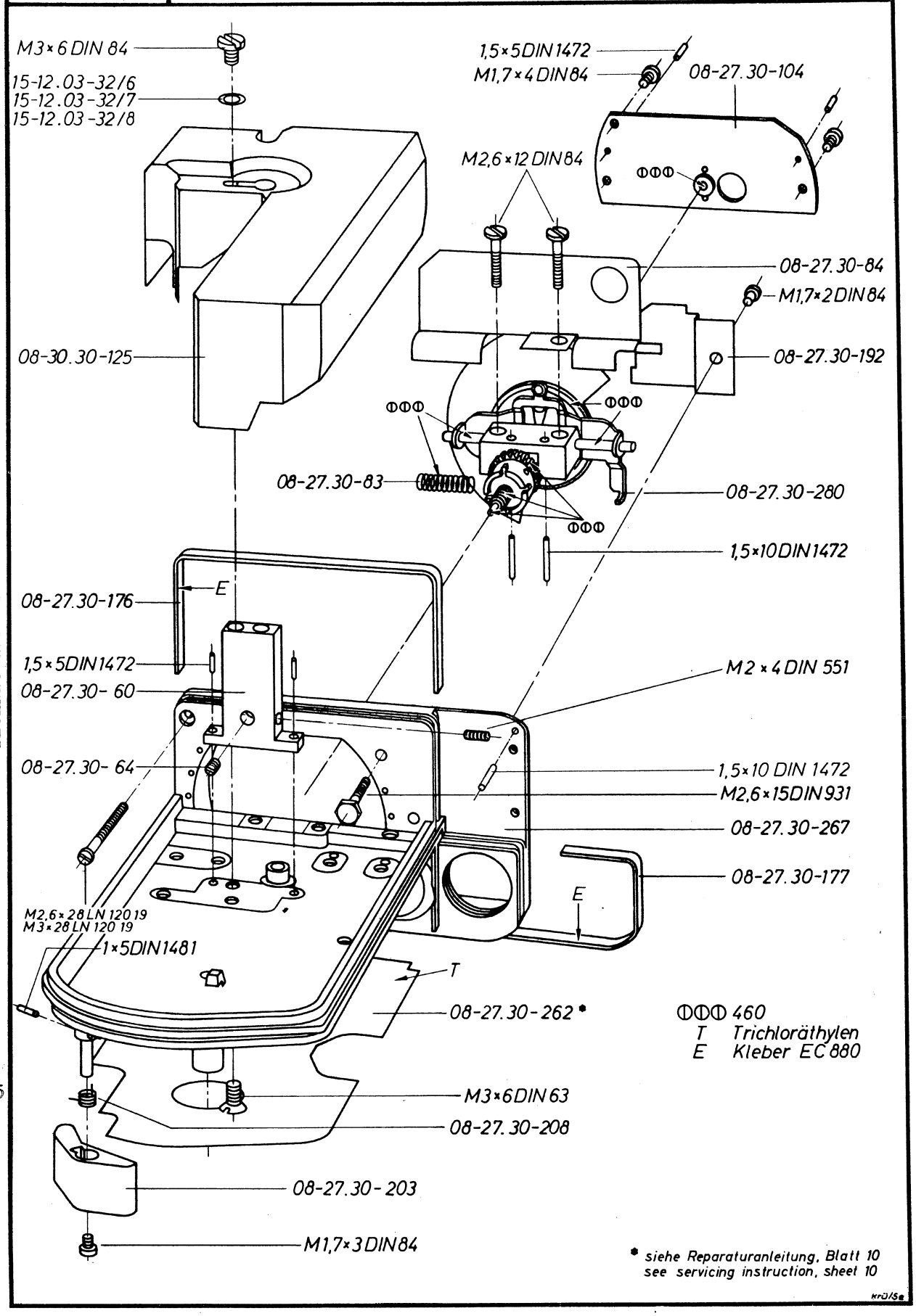

TECHNISCHER KUNDENDIENST

15. 3.65

Leitz WETZLAR	LEICINA 8SV *Prüf 3...*	Blatt Sheet 18.2		
Bestell-Nr Part-No	Benennung Description	Leicina-Modell 8 SV	8 S	8 V
M 1,7 x 2,5 DIN 920	Zylinderschraube, brüniert cylindrical head screw, burnished	1	1	1
1,5 DIN 6799	Sicherungsscheibe, brüniert retaining washer, burnished	3	3	3
1,9 DIN 6799	Sicherungsscheibe, brüniert retaining washer, burnished	2	2	2
M 1,7 x 2,5 LN 120 19	Zylinderschraube, brüniert cylindrical head screw, burnished	1	1	1
15-10.170-20	Zylinderschraube, brüniert cylindrical head screw, burnished	3	3	3
15-12.02-28/2	Unterlegscheibe, brüniert washer, burnished	1	1	1
15-12.03-21/1	Unterlegscheibe, brüniert washer, burnished	1	1	1

Blatt Sheet 18.2	LEICINA 8SV Prüf 3 ...	Leitz WETZLAR		
Bestell-Nr Part-No	Benennung Description	Leicina-Modell 8 SV	8 S	8 V
08-27.30- 12	Umlenkrolle guide roller	1	1	1
08-27.30- 29	Friktionsfeder friction spring	1	1	1
08-27.30- 30	Mutter nut	1	1	1
08-27.30- 35	Scheibe, bei Bedarf washer, when needed	6	6	6
08-27.30- 37	Andruckplatte, kompl. pressure plate, compl.	1	1	1
08-27.30- 38	Andruckplatte pressure plate	1	1	1
08-27.30- 42	Andruckfeder pressure spring	1	1	1
08-27.30- 43	Schwenkklappe swivel carriage	1	1	1
08-27.30- 44	Laufrolle roller	2	2	2
08-27.30- 45	Druckfeder pressure spring	1	1	1
08-27.30- 46	Raststift drop-in pin	1	1	1
08-27.30-180	Fassung mit Linse, 10 mm lang mount with lens, 10 mm long	1	-	1
08-27.30-253	Lagerstift bolt	1	1	1
08-27.30-254	Filmkanal film track	1	1	1
08-27.30-255	Führungsfeder guide spring	1	1	1
08-27.30-256	Unterlegblech intermediate plate	1	1	1
08-27.30-265	Aufwickelachse winding shaft	1	1	1
08-27.30-270	Aufwickelritzel take-up pinion	1	1	1
08-30.302-030	Friktionshülse, kompl. friction socket, compl.	1	1	1
08-30.302-032	Friktionshülse / friction socket	1	1	1
08-30.302-037	Distanzhülse /distance sleeve	1	-	-
08-30.302-144	Leitblech film leader	1	1	1
08-30.302-146	Anschlagwinkel evaluation angle	1	1	1
08-30.302-147	Schwenkblech mit Federn und Achse swing arm with springs and shaft	1	1	1
08-30.302-148	Lagerstift bolt	1	1	1
08-30.302-149	Drehfeder tension spring	1	1	1
08-30.302-151	Schwenkblech swing arm	1	1	1
08-35.30-100	Vorschraubring (nur für Leicina 8 V und 8 SV) retaining ring (for Leicina 8 V and 8 SV only)	1	-	1
1,8 DIN 125	Unterlegscheibe, schwarz halbmatt washer, black semimat	1	1	1
M 2 DIN 546	Schlitzmutter, brüniert slotted nut, burnished	1	1	1
M 1,7 x 2 DIN 553	Gewindestift, brüniert grub screw, burnished	2	2	2

TECHNISCHER KUNDENDIENST

30.9.65

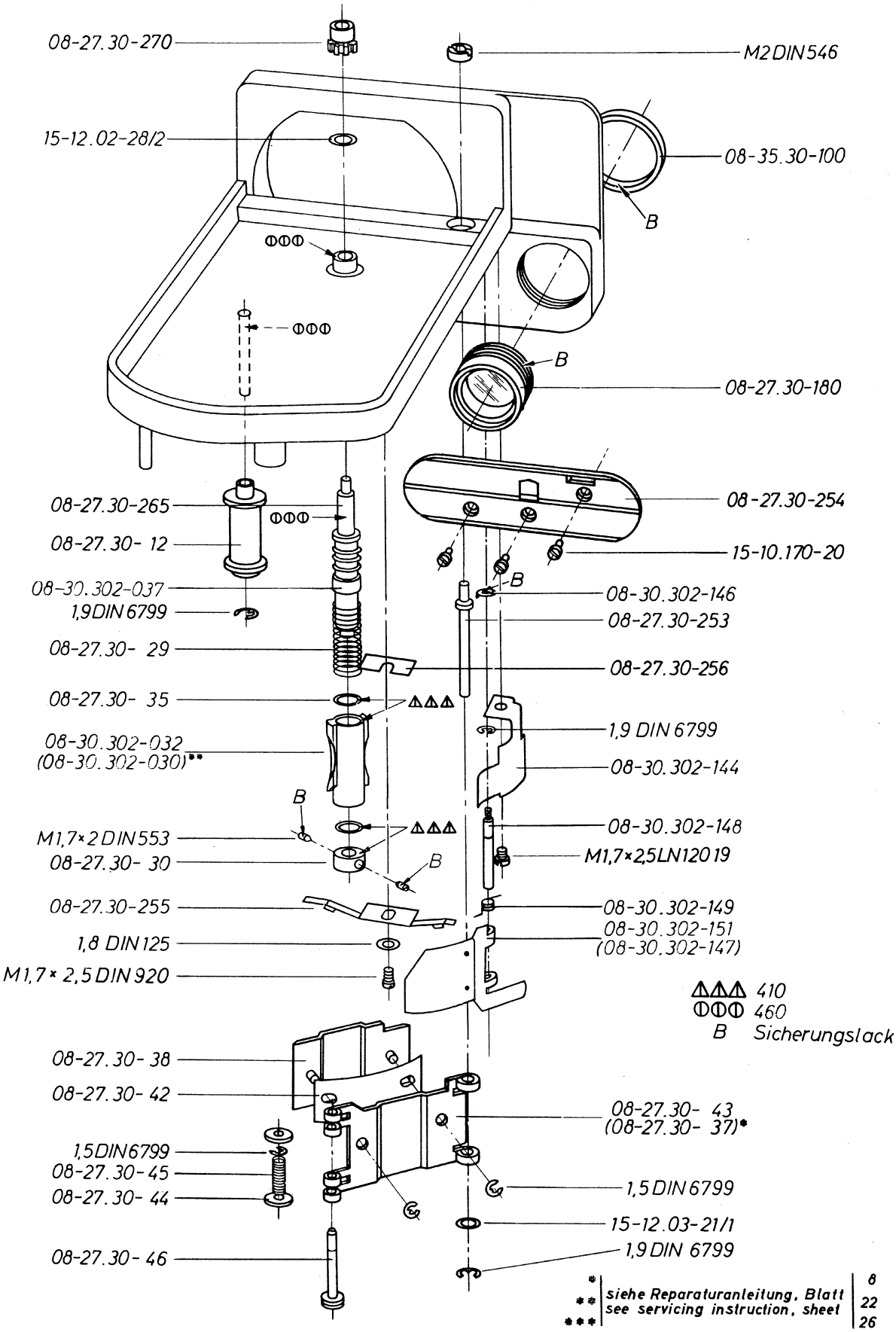
08-27.30-270
M2 DIN 546
15-12.02-28/2
08-35.30-100
B
ΦΦΦ
ΦΦΦ
B
08-27.30-180
08-27.30-265
ΦΦΦ
08-27.30-254
08-27.30- 12
15-10.170-20
B
08-30.302-037
08-30.302-146
1,9 DIN 6799
08-27.30-253
08-27.30- 29
08-27.30-256
08-27.30- 35
ΔΔΔ
1,9 DIN 6799
08-30.302-032
(08-30.302-030)**
08-30.302-144
B
ΔΔΔ
08-30.302-148
M1,7×2 DIN 553
08-27.30- 30
B
M1,7×2,5 LN 12019
08-27.30-255
08-30.302-149
1,8 DIN 125
08-30.302-151
(08-30.302-147)
M1,7 × 2,5 DIN 920
ΔΔΔ 410
ΦΦΦ 460
B Sicherungslack
08-27.30- 38
08-27.30- 42
08-27.30- 43
(08-27.30- 37)*
1,5 DIN 6799
08-27.30-45
08-27.30- 44
1,5 DIN 6799
15-12.03-21/1
08-27.30- 46
1,9 DIN 6799
* siehe Reparaturanleitung, Blatt 8
** see servicing instruction, sheet 22
*** 26

30.9.65

Leitz WETZLAR	LEICINA 8SV Prüf 1... Prüf 2	Blatt Sheet 18.1		
Bestell-Nr Part-No	Benennung Description	Leicina-Modell 8 SV	8 S	8 V
15-12.02-28/2	Unterlegscheibe, brüniert washer, burnished	1	1	1
15-12.03-21/1	Unterlegscheibe, brüniert washer, burnished	1	1	1

TECHNISCHER KUNDENDIENST

Blatt / Sheet 18.1	LEICINA 8SV Prüf 1 ... Prüf 2	Leitz WETZLAR		
Bestell-Nr / Part-No	Benennung / Description	Leicina-Modell 8 SV	8 S	8 V
08-27.30- 12	Umlenkrolle / guide roller	1	1	1
08-27.30- 29	Friktionsfeder / friction spring	1	1	1
08-27.30- 30	Mutter / nut	1	1	1
08-27.30- 35	Scheibe / washer	4	4	4
08-27.30- 37	Andruckplatte, kompl. / pressure plate, compl.	1	1	1
08-27.30- 38	Andruckplatte / pressure plate	1	1	1
08-27.30- 42	Andruckfeder / pressure spring	1	1	1
08-27.30- 43	Schwenkklappe / swivel carriage	1	1	1
08-27.30- 44	Laufrolle / roller	2	2	2
08-27.30- 45	Druckfeder / pressure spring	1	1	1
08-27.30- 46	Raststift / drop-in pin	1	1	1
08-27.30-180	Fassung mit Linse, 10 mm lang / mount with lens, 10 mm long	1	-	1
08-27.30-197	Leitblech / film leader	1	1	1
08-27.30-253	Lagerstift / bolt	1	1	1
08-27.30-254	Filmkanal / film track	1	1	1
08-27.30-255	Führungsfeder / guide spring	1	1	1
08-27.30-256	Unterlegblech / intermediate plate	1	1	1
08-27.30-264	Friktionshülse, kompl. / friction socket, compl.	1	1	1
08-27.30-265	Aufwickelachse / winding shaft	1	1	1
08-27.30-266	Friktionshülse / friction socket	1	1	1
08-27.30-270	Aufwickelritzel / take-up pinion	1	1	1
08-35.30-100	Vorschraubring (nur für Leicina 8 V und 8 SV) / retaining ring (for Leicina 8 V and 8 SV only)	1	-	1
1,8 DIN 125	Unterlegscheibe, schwarz halbmatt / washer, black semimat	1	1	1
M 2 DIN 546	Schlitzmutter, brüniert / slotted nut, burnished	1	1	1
M1,7x2 DIN 553	Gewindestift, brüniert / grub screw, burnished	2	2	2
M 1,7 x 2,5 DIN 920	Zylinderschraube, brüniert / cylindrical head screw, burnished	1	1	1
1,5 DIN 6799	Sicherungsscheibe, brüniert / retaining washer, burnished	3	3	3
1,9 DIN 6799	Sicherungsscheibe, brüniert / retaining washer, burnished	2	2	2
M 1,7 x 2,5 LN 120 19	Zylinderschraube, brüniert / cylindrical head screw, burnished	1	1	1
15-10.170-20	Zylinderschraube, brüniert / cylindrical head screw, burnished	3	3	3

TECHNISCHER KUNDENDIENST

15. 3.65

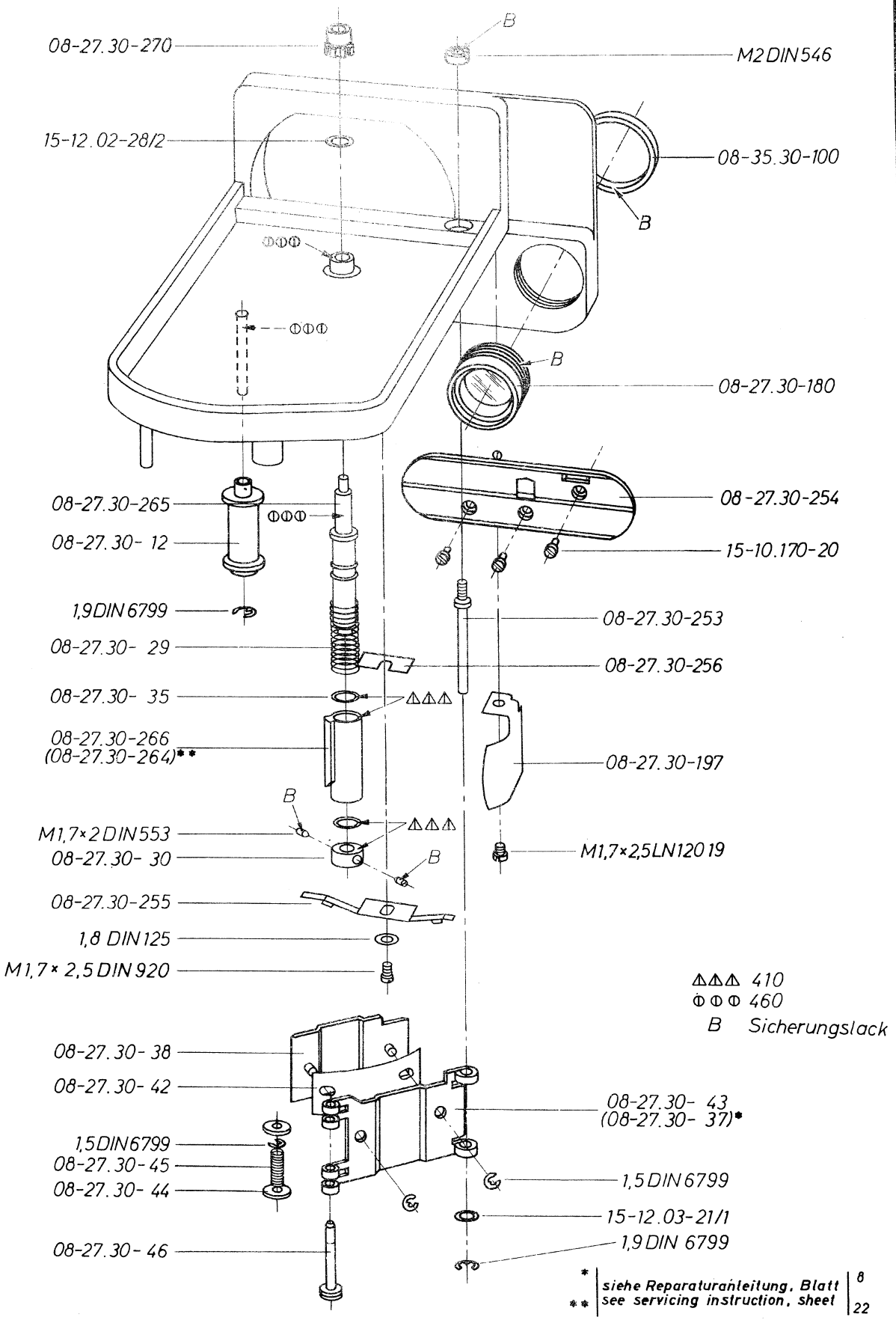

* siehe Reparaturanleitung, Blatt 8
** see servicing instruction, sheet 22

TECHNISCHER KUNDENDIENST

15. 3.65

Leitz WETZLAR	LEICINA 8SV Prüf 1...	Blatt Sheet 19.2		
Bestell-Nr Part-No	Benennung Description	Leicina-Modell 8 SV	8 S	8 V
M1,7 x 2,5 DIN 920	Linsenschraube, brüniert oval head screw, burnished	2	2	2
M 2 x 2 DIN 923	Linsenschraube mit Ansatz, brüniert oval head screw, burnished	1	1	1
1,5 x 5 DIN 1472	Paßkerbstift, brüniert notched dowel pin, burnished	2	2	2
1,5 DIN 6799	Sicherungsscheibe retaining washer	1	1	1
A1,2 x 0,2 x 4,5 DIN 7340	Rohrniet rivet	2	2	2
M2,6 x 4 LN 120 19	Zylinderschraube, brüniert cylindrical head screw, burnished	6	6	6
15-12.01-11/3	Unterlegscheibe washer	4	4	4
15-12.02-17/1	Unterlegscheibe washer	1	1	1
15-12.02-19/1	Unterlegscheibe washer	1	1	1
15-12.03-21/1	Unterlegscheibe washer	1	1	1

Blatt Sheet 19.2	LEICINA 8SV Prüf 1...	Leitz WETZLAR		
Bestell-Nr Part-No	Benennung Description	Leicina-Modell 8 SV	8 S	8 V
08-27.30- 54	Stecker plug	1	1	1
08-27.30-130	Unterlegblech, magnetisiert plate, magnetized	1	1	1
08-27.30-134	Schalterträger switch frame	1	1	1
08-27.30-135	Schalterträger, kompl. mit Mikroschalter switch frame, compl. with micro switch	1	1	1
08-27.30-138	Stopper-Schaltarm stopper switch arm	1	1	1
08-27.30-139	Feder spring	1	1	1
08-27.30-144	Isolierfolie insulation foil	1	1	1
08-27.30-146	Stopper stopper	1	1	1
08-27.30-158	Unterlage distance plate	1	1	1
08-27.30-160	Kontakthalter / contact holder	1	1	1
08-27.300-071	Motorlager / motor bearing	1	1	1
08-27.300-074	Zwischenrad intermediate wheel	1	1	1
08-30.30 E5	Kabelbaum mit zwei Isolierschläuche cable conduit with two insulating spaghetti	1	-	1
08-30.30 E6- 1	Kabel, blau weiß cable, blue white	1	-	1
08-30.30 E6- 2	Kabel, gelb rot cable, yellow red	1	-	1
08-30.30 E6- 3	Kabel, weiß grün cable, white green	1	-	1
08-30.30 E6- 4	Kabel, grün rot cable, green red	1	-	1
08-30.30 E6- 5	Kabel, grün braun cable, green brown		-	
08-30.30 E6- 6	Kabel, blau braun cable, blue brown			
08-30.30 E6- 8	Kabel, gelb weiß cable, yellow white			
08-30.30 E6-10	Kabel, gelb braun cable, yellow brown			
08-30.30 E6-11	Kabel, weiß grün cable, white green			
08-30.30 E6-14	Isolierschlauch, schwarz insulating spaghetti, black			
08-30.301-049	Motor mit Lager und Kabelbaum motor with motor bearing and cable conduit			
08-30.301-050	Motorlager mit Motor motor bearing with motor			
08-30.301-120	Funkenlöschglied spark quenching device			
302-27.45-4	Mikroschalter micro switch			
302-050.041	Motor motor			
305-024.027-001	Drehmagnetmeßwerk moving-needle measuring instrument			
M1,7 x 4 DIN 84	Zylinderschraube, brüniert cylindrical head screw, burnished			
M1,7 x 7 DIN 84	Zylinderschraube, brüniert cylindrical head screw, burnished			

SCHWEDISCHER KUNDENDIENST

30. 9.65

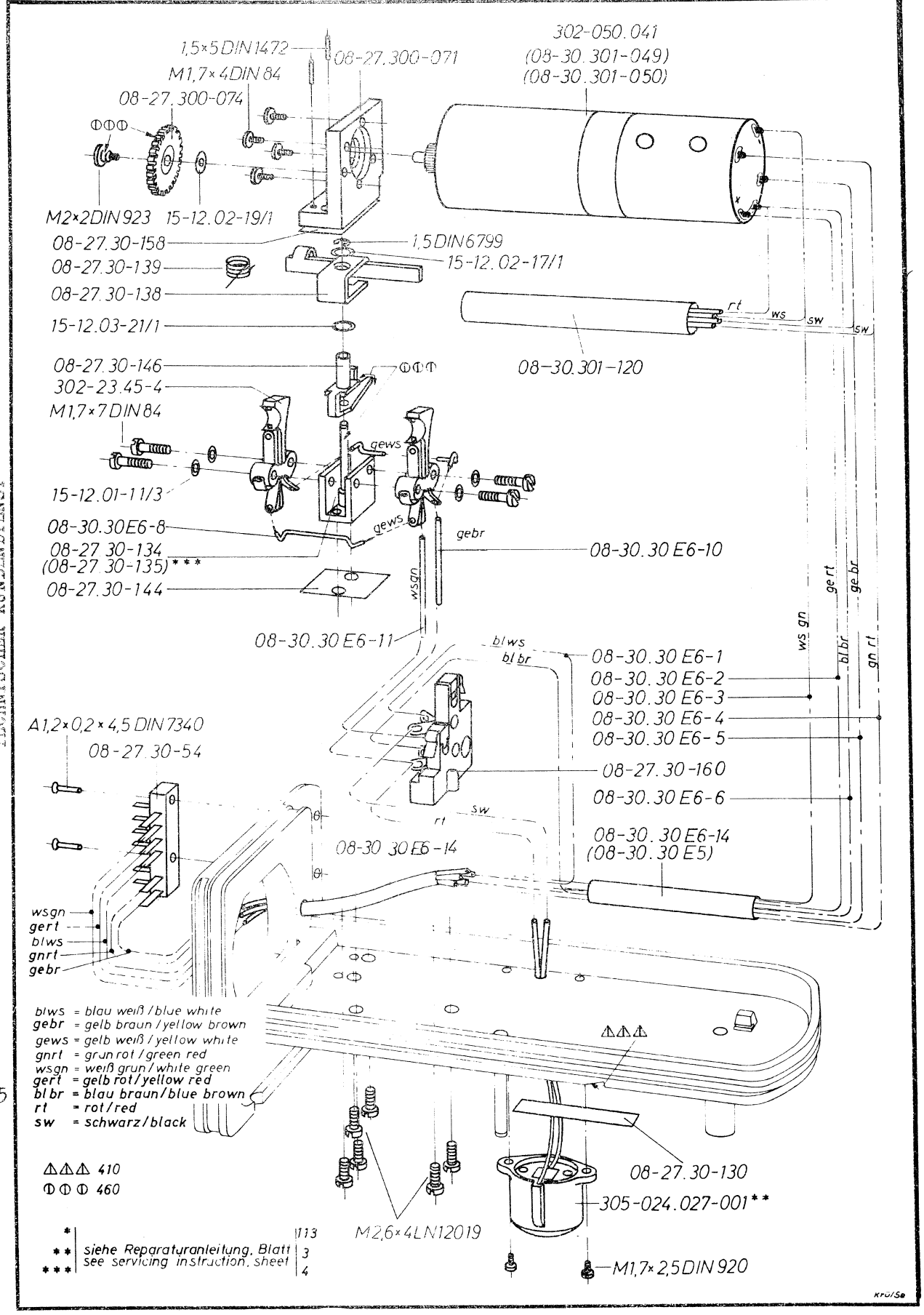

TECHNISCHER KUNDENDIENST

30. 9. 65

Leitz WETZLAR

LEICINA 8SV Prüf 1...

Blatt / Sheet 19.1

Bestell-Nr / Part-No	Benennung / Description	Leicina-Modell 8 SV	8 S	8 V
305-024.027-001	Drehmagnetmeßwerk moving-needle measuring instrument	1	1	1
	Tesafilm 104, schwarz, 19 x 130 mm adhesive tape 104, black, 19 x 130 mm	1	-	1
M1,7 x 7 DIN 84	Zylinderschraube, brüniert cylindrical head screw, burnished	4	4	4
M 2 x 4 DIN 84	Zylinderschraube, brüniert cylindrical head screw, burnished	4	4	4
M1,7 x 2,5 DIN 920	Linsenschraube, brüniert oval head screw, burnished	2	2	2
M 2 x 2 DIN 923	Linsenschraube mit Ansatz, brüniert oval head screw, burnished	1	1	1
1,5 x 5 DIN 1472	Paßkerbstift, brüniert notched dowel pin, burnished	2	2	2
1,5 DIN 6799	Sicherungsscheibe retaining washer	1	1	1
A1,2 x 0,2 x 4,5 DIN 7340	Rohrniet rivet	2	2	2
M2,6 x 4 LN 120 19	Zylinderschraube, brüniert cylindrical head screw, burnished	6	6	6
15-12.01-11/3	Unterlegscheibe washer	4	4	4
15-12.02-17/1	Unterlegscheibe washer	1	1	1
15-12.02-19/1	Unterlegscheibe washer	1	1	1
15-12.03-21/1	Unterlegscheibe washer	1	1	1
15-12.10-26/5	Scheibe, bei Bedarf, 0,1 mm dick washer, when needed, 0.1 mm thick	1	-	1
15-12.10-26/6	Scheibe, bei Bedarf, 0,2 mm dick washer, when needed, 0.2 mm thick	1	-	1

TECHNISCHER KUNDENDIENST

Blatt Sheet 19.1	LEICINA 8SV Prüf 1 ...	Leitz WETZLAR		
Bestell-Nr Part-No	Benennung Description	Leicina-Modell 8 SV	8 S	8 V
08-27.30- 54	Stecker plug	1	1	1
08-27.30-117	Motorlager motor bearing	1	1	1
08-27.30-130	Unterlegblech, magnetisiert plate, magnetized	1	1	1
08-27.30-134	Schalterträger switch frame	1	1	1
08-27.30-135	Schalterträger, kompl. mit Mikroschalter switch frame, compl. with micro switch	1	1	1
08-27.30-138	Stopper-Schaltarm stopper switch arm	1	1	1
08-27.30-139	Feder spring	1	1	1
08-27.30-144	Isolierfolie insulation foil	1	1	1
08-27.30-146	Stopper stopper	1	1	1
08-27.30-158	Unterlage distance plate	1	1	1
08-27.30-160	Kontakthalter contact holder	1	1	1
08-27.30-289	Zwischenrad intermediate wheel	1	1	1
08-30.30 E5	Kabelbaum mit zwei Isolierschläuche cable conduit with two insulating spaghetti	1	-	1
08-30.30 E6- 1	Kabel, blau weiß cable, blue white	1	-	1
08-30.30 E6- 2	Kabel, gelb rot cable, yellow red	1	-	1
08-30.30 E6- 3	Kabel, weiß grün cable, white green	1	-	1
08-30.30 E6- 4	Kabel, grün rot cable, green red	1	-	1
08-30.30 E6- 5	Kabel, gelb braun cable, yellow brown	1	-	1
08-30.30 E6- 6	Kabel, blau braun cable, blue brown	1	-	1
08-30.30 E6- 7	Röhrchen small tube	1	-	1
08-30.30 E6- 8	Kabel, gelb weiß cable, yellow white	2	2	2
08-30.30 E6-10	Kabel, gelb braun cable, yellow brown	1	-	1
08-30.30 E6-11	Kabel, weiß grün cable, white green	1	-	1
08-30.30 E6-14	Isolierschlauch, schwarz insulating spaghetti, black	2	1	2
08-30.30-50	Motorlager mit Motor motor bearing with motor	1	-	1
08-30.300-51	Widerstand 47 Ohm 4 A DIN 41 424 resistance 47 Ohm 4 A DIN 41 424	1	-	1
08-30.300-52	Widerstand 47 Ohm 4 A DIN 41 424 resistance 47 Ohm 4 A DIN 41 424	1	-	1
08-30.300-53	Kondensator 6,4 u F / 15 V EL 6,4 / 15 D condenser 6.4 u F / 15 V EL 6.4 / 15 D	1	-	1
302-004.038-001	Isolierfolie / insulating foil	1	-	1
302-23.45-4	Mikroschalter / micro switch	2	2	2
302-050.025-01	Motor, gelötet, mit Kondensator und Widerständen motor, soldered, with condenser and resistances	1	-	1

TECHNISCHER KUNDENDIENST

30. 9.65

Ernst Leitz GmbH Wetzlar

LEICINA 8SV Prüf 1...

Blatt / Sheet 19.1

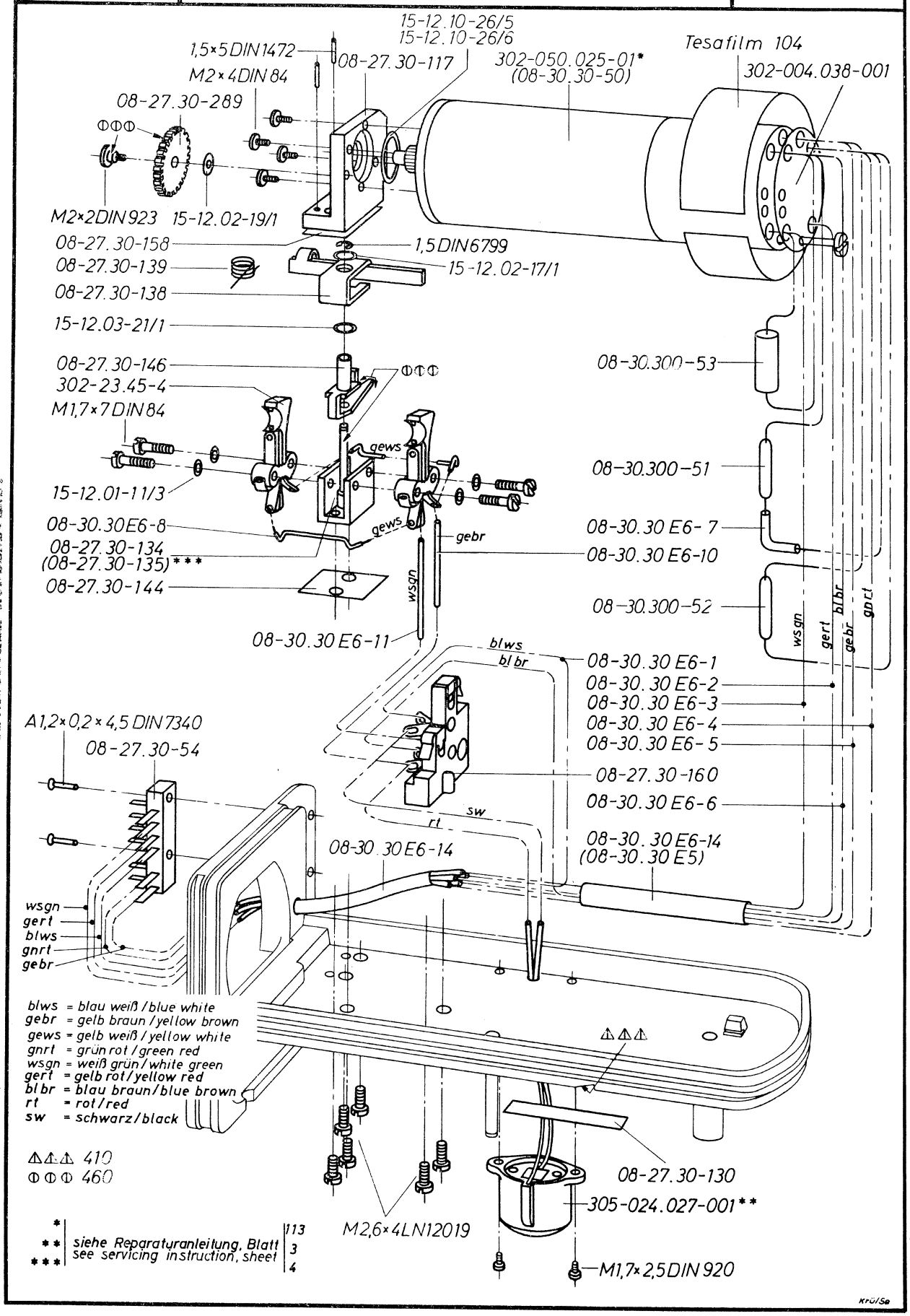

30. 9. 65

Krü/Se