WIRING DIAGRAM MANUAL

FILMOSOUND PROJECTORS

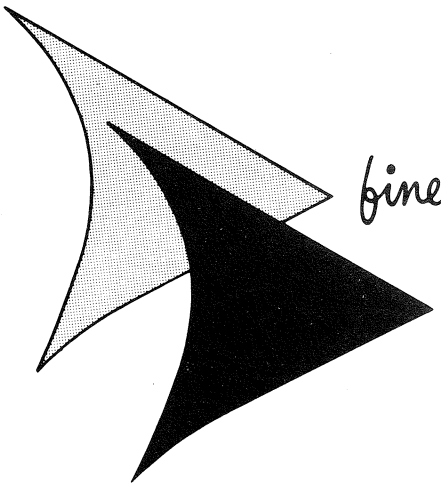

finer products through imagination

Bell & Howell

GENERAL SERVICE DEPT.
7125 N. KIMBALL AVE.
CHICAGO 45, ILLINOIS

PRINTED IN U.S.A.

INTRODUCTION

This manual has been prepared especially for the Bell & Howell Service Stations. It is assumed that the repair man performing repairs has a thorough knowledge of sound amplifiers and the operation of all Filmosounds. If the repair man is not familar with Filmosound operation, reference should be made to the Instruction Book and Manual of Operation which accompanies each machine.

Index

Index

Index

Index

SECTION A

GENERAL INFORMATION

AMPLIFIERS.

Amplifier circuits are all conventional or adaptations of conventional tube circuits. An oscillating vacuum tube supplies energy for the exciter lamp. Frequencies range from 22KC to 100KC, depending on the model. Volume is usually controlled at two places: first, by varying the voltage on the oscillator tube causing a change of oscillation intensity, and second, by varying the voltage to the photocell. On older models this is accomplished by one control which is placed in the cathode circuit of the oscillator tube. A lead from the cathode side of this control connects to one side of the photocell and the voltage drop is used to neutralize the voltage on the opposite side of the photocell when the control is in the minimum position. Therefore, if the two voltages are not equal the volume will not shut off completely. Another method is used on the later Design 138, Model R and Design 156, Model A and D amplifiers. This consists of a dual control, one section of which varies the voltage on the photocell, and the other changes the degree of feedback in the oscillator tube.

EXCITER LAMP VOLTAGE.

Exciter lamp voltage or current cannot be measured with any meter other than a vacuum tube voltmeter or a radio frequency ammeter. Many modern testing units are not vacuum tube voltmeters on the A.C. scales.

SPEAKERS.

Speakers have specially designed cones whose frequency characteristics blend in with those of the associated amplifier; therefore, do not have damaged cones replaced by any company other than Bell & Howell.

PARTS.

Parts should always be ordered by the "A" number and description. If the number is unknown give the projector serial number and a brief description of the part.

TUBES.

Tubes used must be very low in microphonic qualities, otherwise vibration of the running motor will be reproduced in the speaker.

MODEL DESIGNATION.

On all old model Filmosounds the model designation appears on the projector name plate. On late model Filmosounds the amplifier part number appears on an individual plate attached to the amplifier. Be sure to give the serial number of the projector and, when possible, the part number of the amplifier in correspondence concerning an amplifier.

On models manufactured since 1943 the design number and model designation appear on the name plates of projector and speaker case.

RESISTOR COLOR CODE.

The following resistor color code is given as means of determining the resistance values of the resistors.

Color	(A) Body	(B) Tip	(C) Dot
Black	0	0	
Brown	1	1	0
Red	2	2	00
Orange	3	3	000
Yellow	4	4	0000
Green	5	5	00000
Blue	6	6	000000
Violet	7	7	
Grey	8	8	
White	9	9	

EXAMPLE:

_____ Red Body (A)

_____ Green Tip (B)

_____ Yellow Dot (C)

The resistance value of this resistor would be:

Red Body, Green Tip, Yellow Dot

---2----------5----------0000---

which is 250,000 ohms.

Later resistors are marked with 3 consecutive bands. A fourth band is used for tolerance percentage. A gold band indicates a 5% tolerance and a silver band indicates a 10% tolerance. Absence of a fourth band indicates a 20% tolerance. The bands are read 1 - 2 - 3 toward the percentage band.

SECTION B

FILMOSOUND MONITOR SPEAKER

The Filmosound monitor speaker is supplied with a monitor volume control. Permanently attached to this box is a short cord which should be plugged into the amplifier receptacle to which the speaker cable is ordinarily connected.

Connect the speaker cable to the receptacle provided in the monitor speaker case.

The volume of the monitor speaker will always be proportional to the volume of the stage speaker, and experimentation will quickly indicate the correct position of the monitor volume control to provide the proper volume of sound in the projection booth when the stage speaker is delivering the desired output in the auditorium.

Do not connect or disconnect the monitor speaker until the Filmosound amplifier has been turned off.

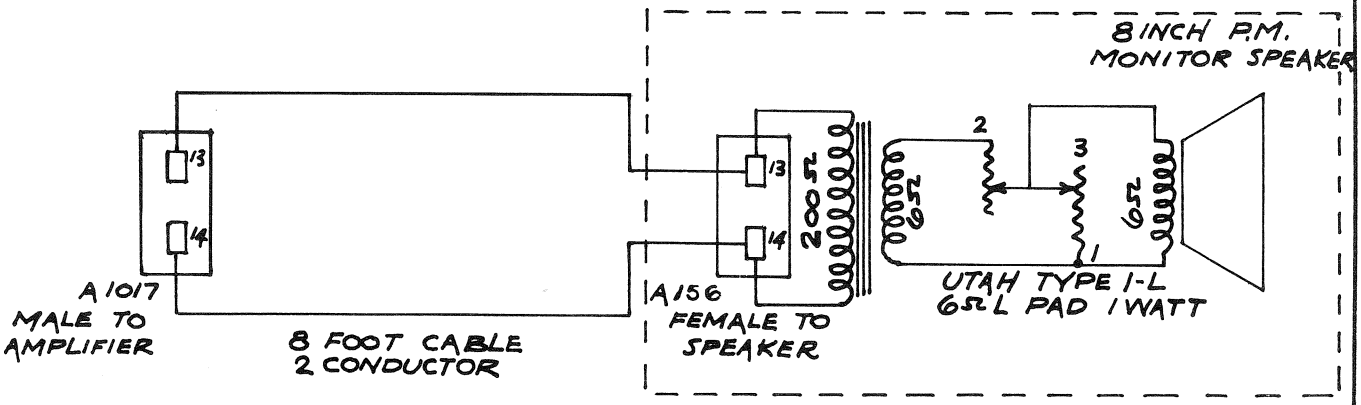

MODELS 130G, GB, E, EB, - 140 A, E, G, H, AB, EB, GB, HB,
142 B, BB, C, CB, 120 J-K

SERVICE DATA	
MONITOR SPEAKER	
	DATE 9-8-45

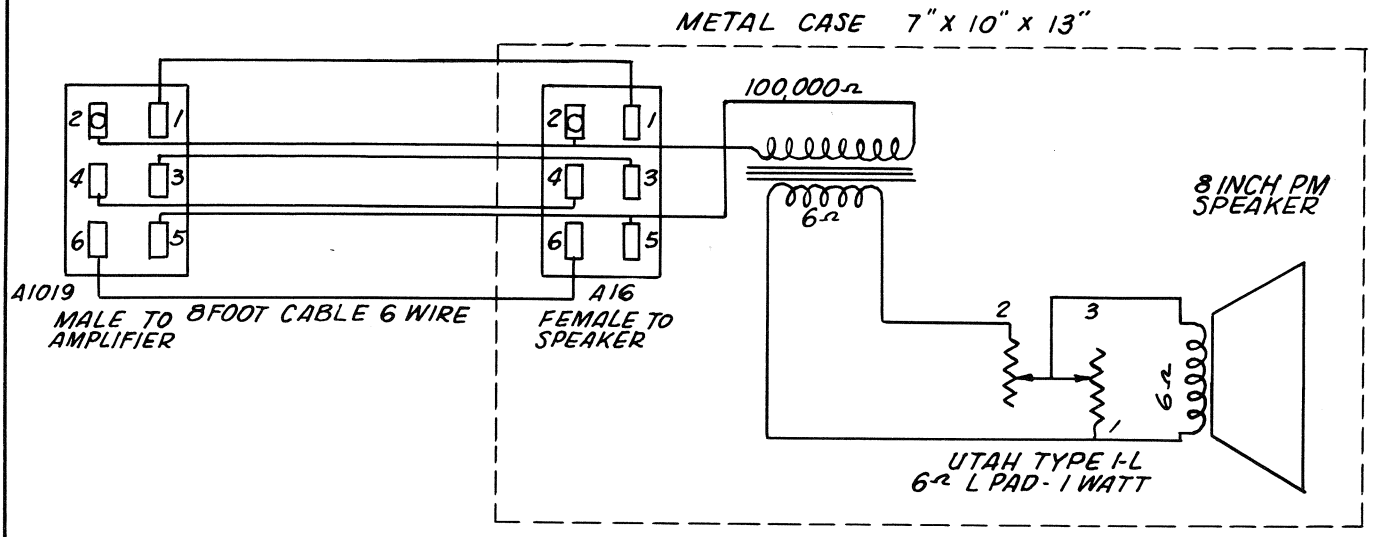

SERVICE DATA	
MONITOR SPEAKER	
MONITOR SPEAKER MODELS 138QTOZ	
	DATE

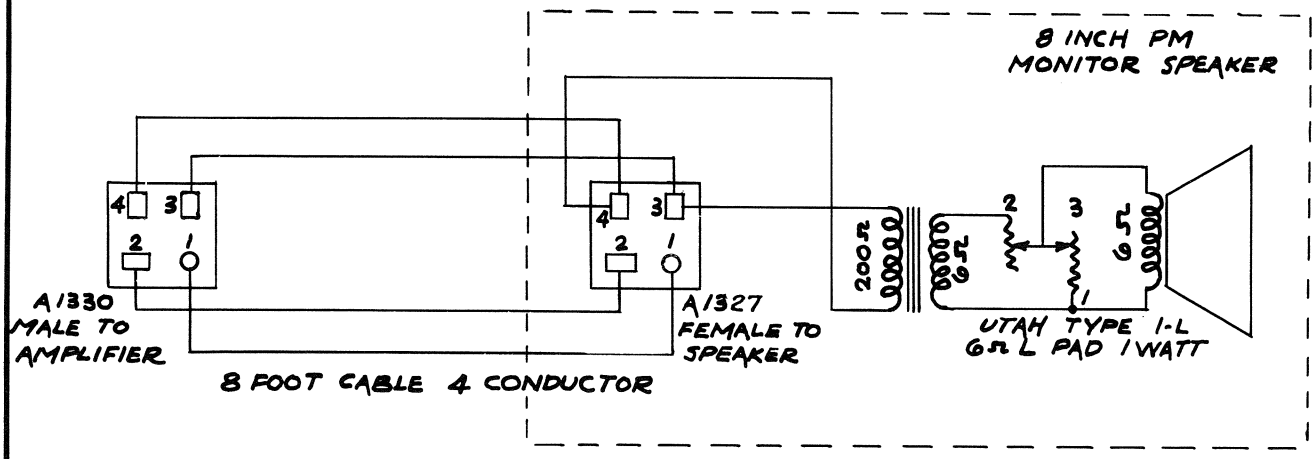

SERVICE DATA	
MONITOR SPEAKER	
MODELS 142 D & DB	
	DATE 9-8-45

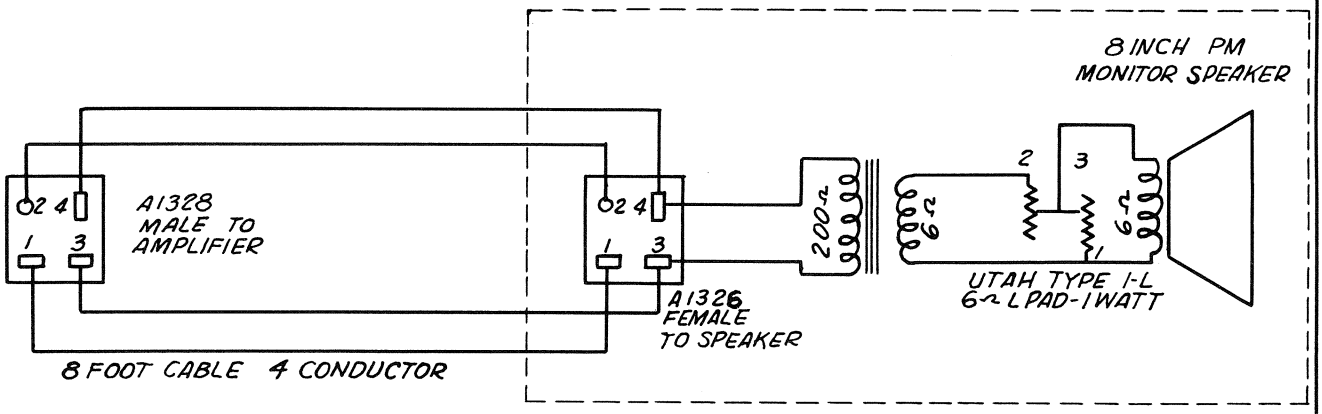

SERVICE DATA	
MONITOR SPEAKER	
MONITOR SPEAKER MODELS 156A,B,C,D, & 156V	
	DATE

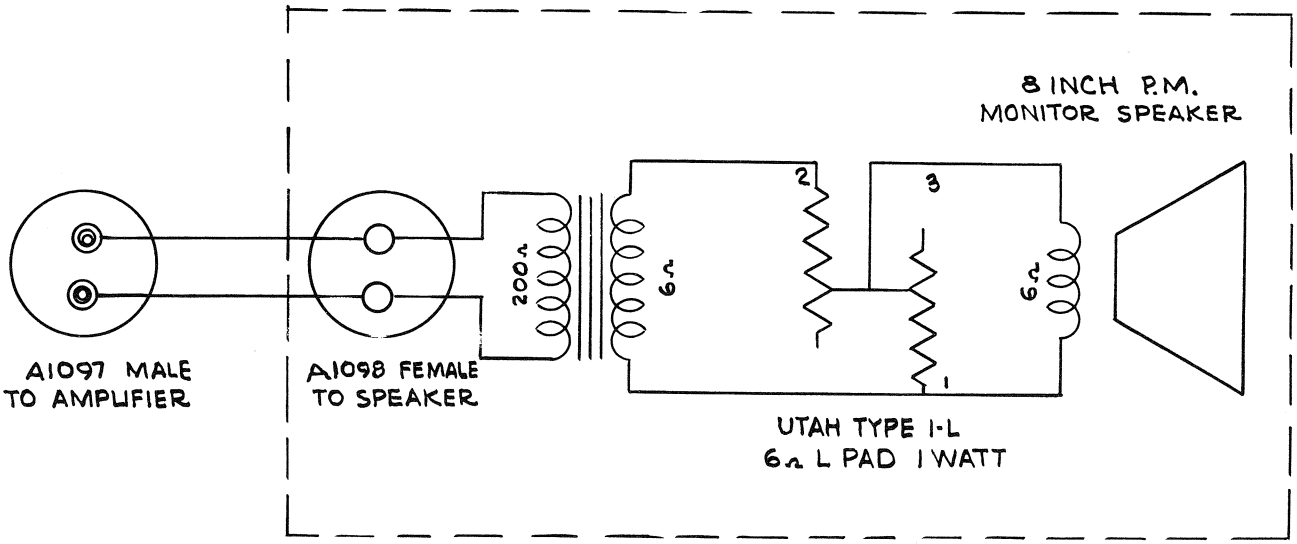

SERVICE DATA
WIRING DIAGRAM
MONITOR SPEAKER MODELS 156 G,H MODELS 179 A,B
DATE: 1-5-46

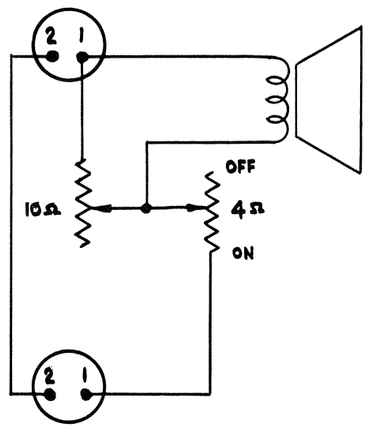

PART 21241

MONITOR SPEAKER FOR USE ON SYSTEMS
UP TO 15 WATTS OUTPUT

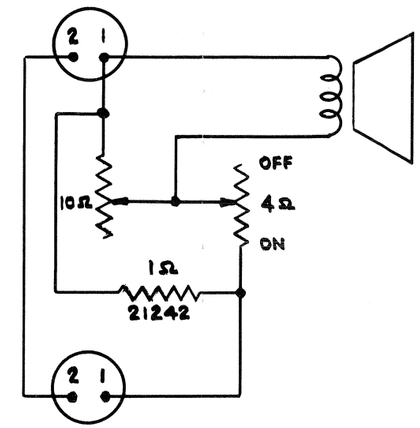

PART 05400

MONITOR SPEAKER FOR USE ON SYSTEMS
FROM 16 WATTS TO 50 WATTS OUTPUT

SERVICE DATA	
MONITOR SPEAKER WIRING DIAGRAMS	
FOR USE WITH PARTS 05400 AND 21241	4-19-51

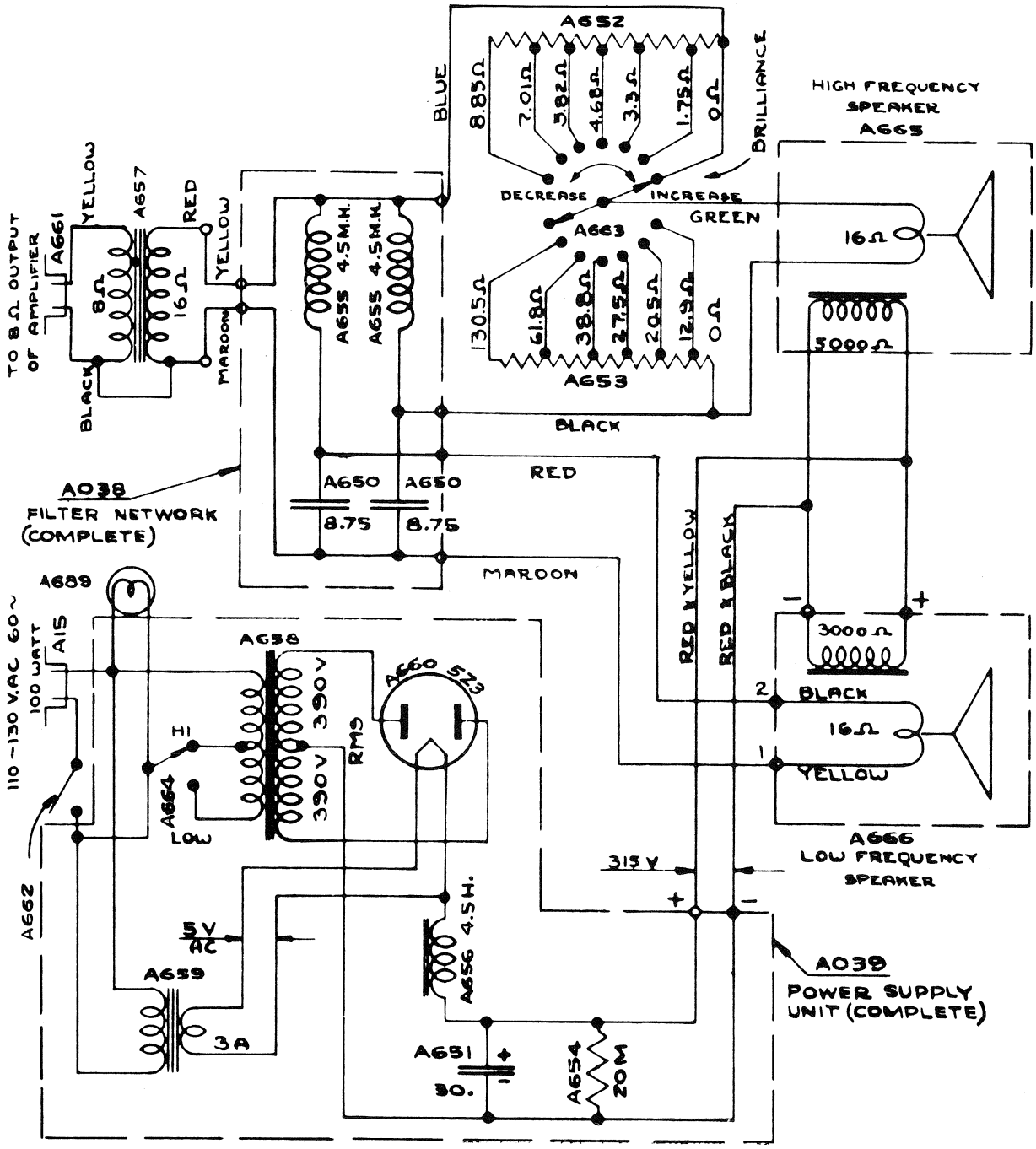

SERVICE DATA	
SPEAKER WIRING DIAGRAM	
ORCHESTRICON	
DATE OF ORIGINAL DRAWING	12-21-39
REVISED	10-15-45

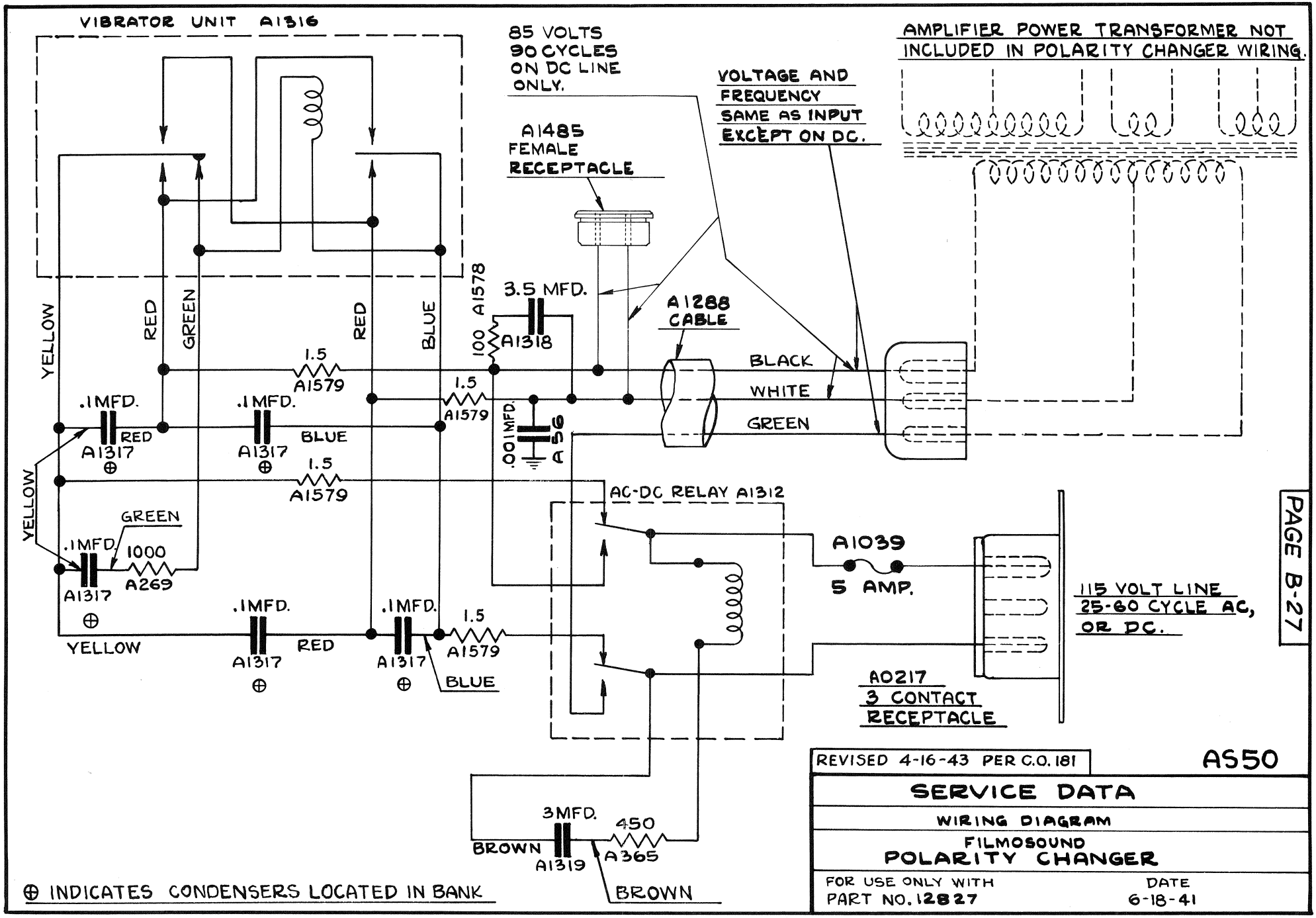
VIBRATOR UNIT A1316
85 VOLTS
90 CYCLES
ON DC LINE
ONLY.
VOLTAGE AND
FREQUENCY
SAME AS INPUT
EXCEPT ON DC.
AMPLIFIER POWER TRANSFORMER NOT
INCLUDED IN POLARITY CHANGER WIRING.
A1485
FEMALE
RECEPTACLE
A1288
CABLE
3.5 MFD.
100 A1578
A1318
YELLOW
RED
GREEN
RED
BLUE
1.5
A1579
.1MFD.
A1317
BLUE
.001MFD.
50
BLACK
WHITE
GREEN
AC-DC RELAY A1312
A1039
5 AMP.
115 VOLT LINE
25-60 CYCLE AC,
OR DC.
GREEN
1000
A269
YELLOW
A0217
3 CONTACT
RECEPTACLE
3MFD.
450
A365
A1319
BROWN
⊕ INDICATES CONDENSERS LOCATED IN BANK
REVISED 4-16-43 PER C.O. 181
A550
SERVICE DATA
WIRING DIAGRAM
FILMOSOUND
POLARITY CHANGER
FOR USE ONLY WITH
PART NO. 12827
DATE
6-18-41

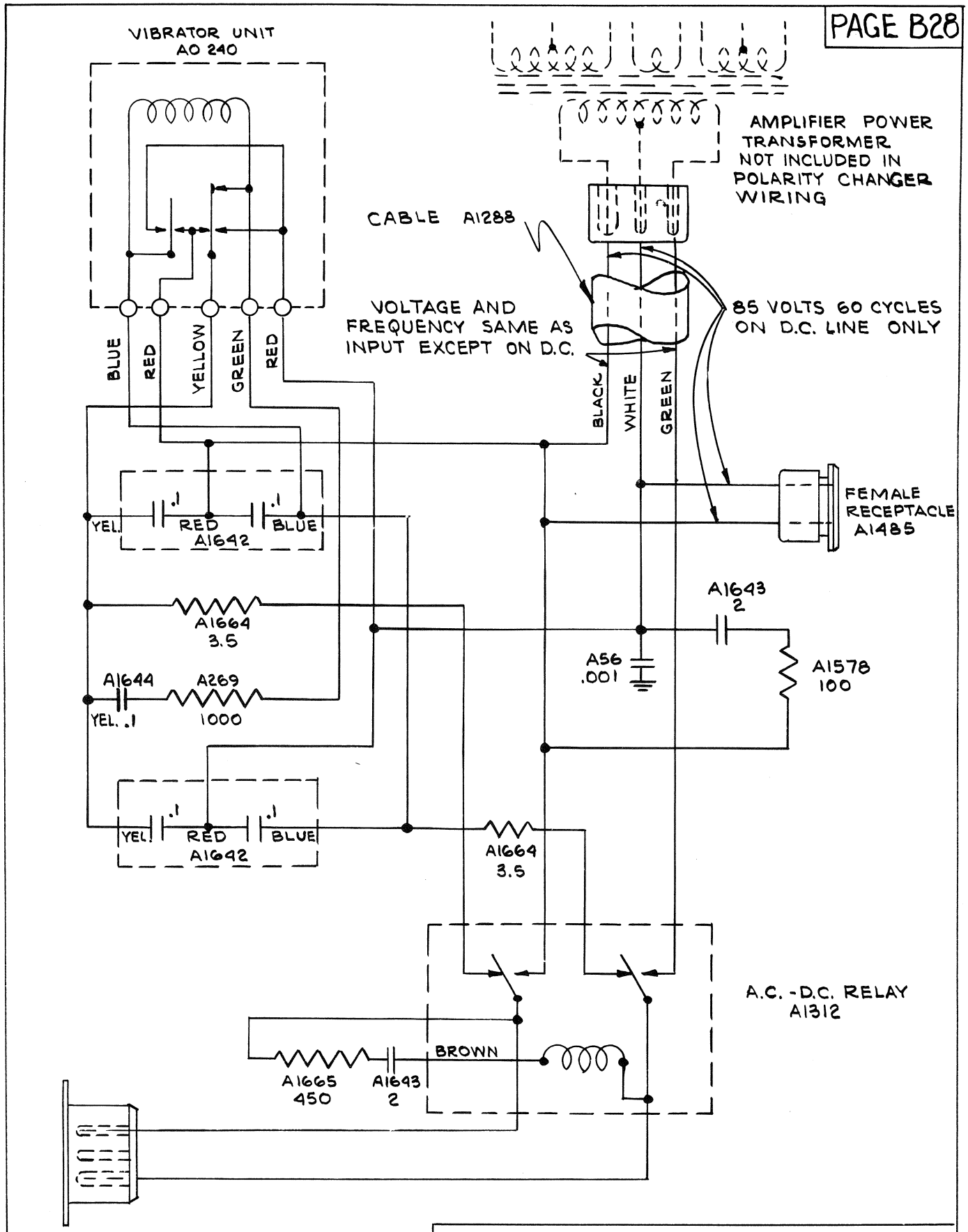

115 VOLT LINE A.C. OR D.C.
25-60 CYCLE A.C.
3 CONTACT RECEPTACLE
AO 217

SERVICE DATA
WIRING DIAGRAM
FILMOSOUND POLARITY CHANGER
FOR USE ONLY WITH PART 13931 — DATE: 1-7-46

B 29

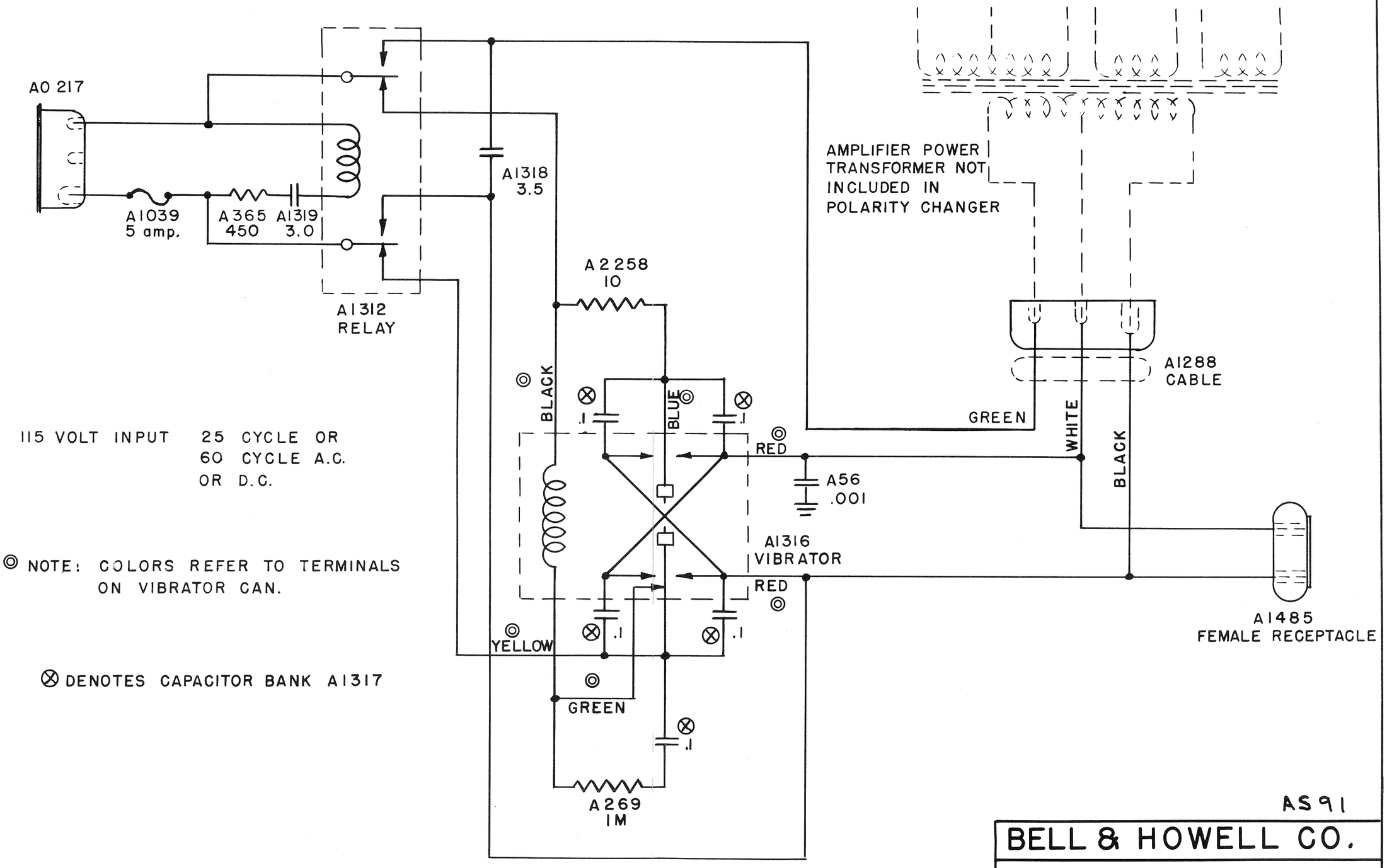

115 VOLT INPUT 25 CYCLE OR 60 CYCLE A.C. OR D.C.

◎ NOTE: COLORS REFER TO TERMINALS ON VIBRATOR CAN.

⊗ DENOTES CAPACITOR BANK A1317

AS91

BELL & HOWELL CO.		
POLARITY CHANGER		
DATE 5-20-46	SERVICE DATA	DRN EWT APVD

PART 12827 REVISED

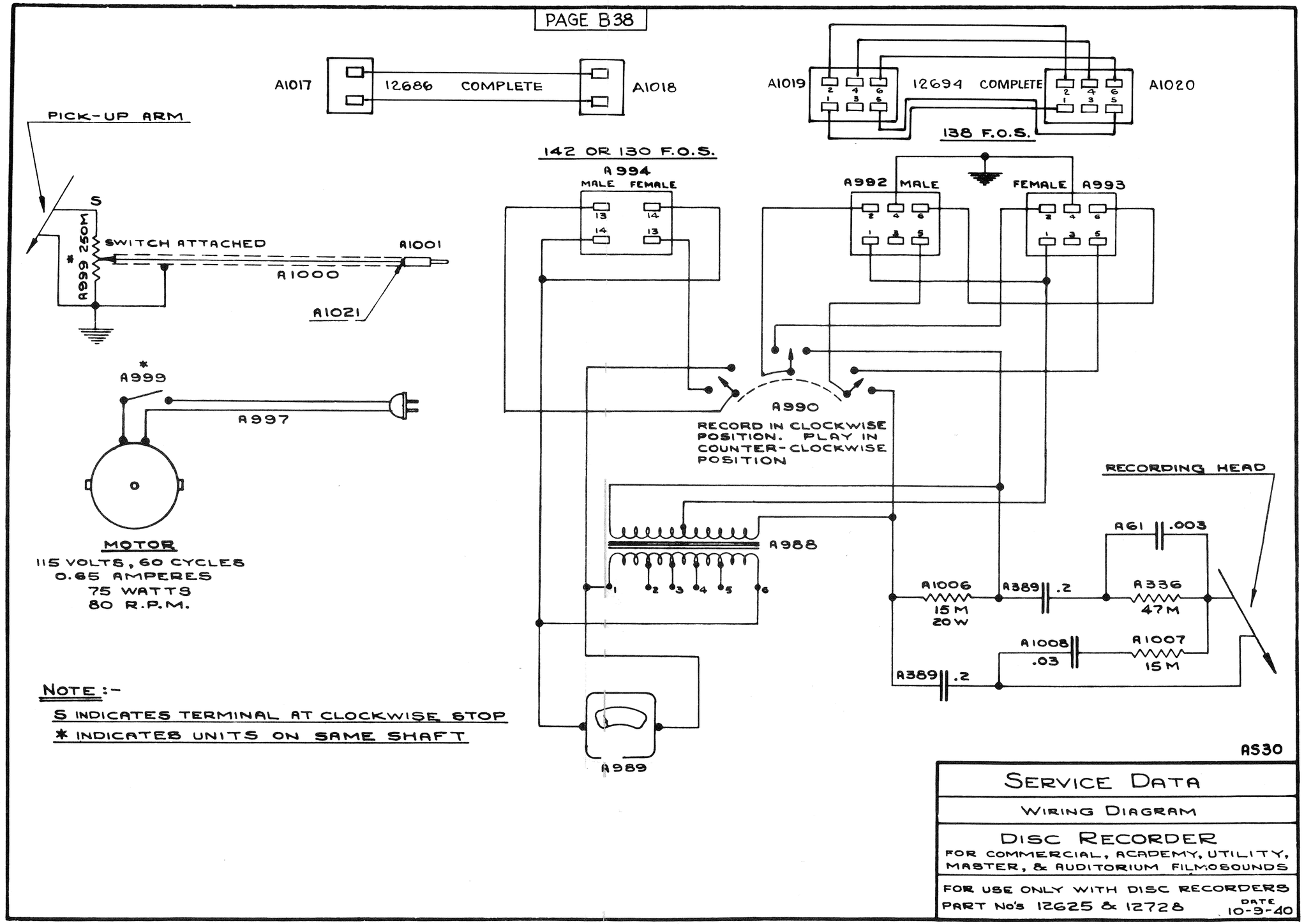

SERVICE DATA

WIRING DIAGRAM

DISC RECORDER

FOR COMMERCIAL, ACADEMY, UTILITY, MASTER, & AUDITORIUM FILMOSOUNDS

FOR USE ONLY WITH DISC RECORDERS

PART No's 12625 & 12728

DATE 10-9-40

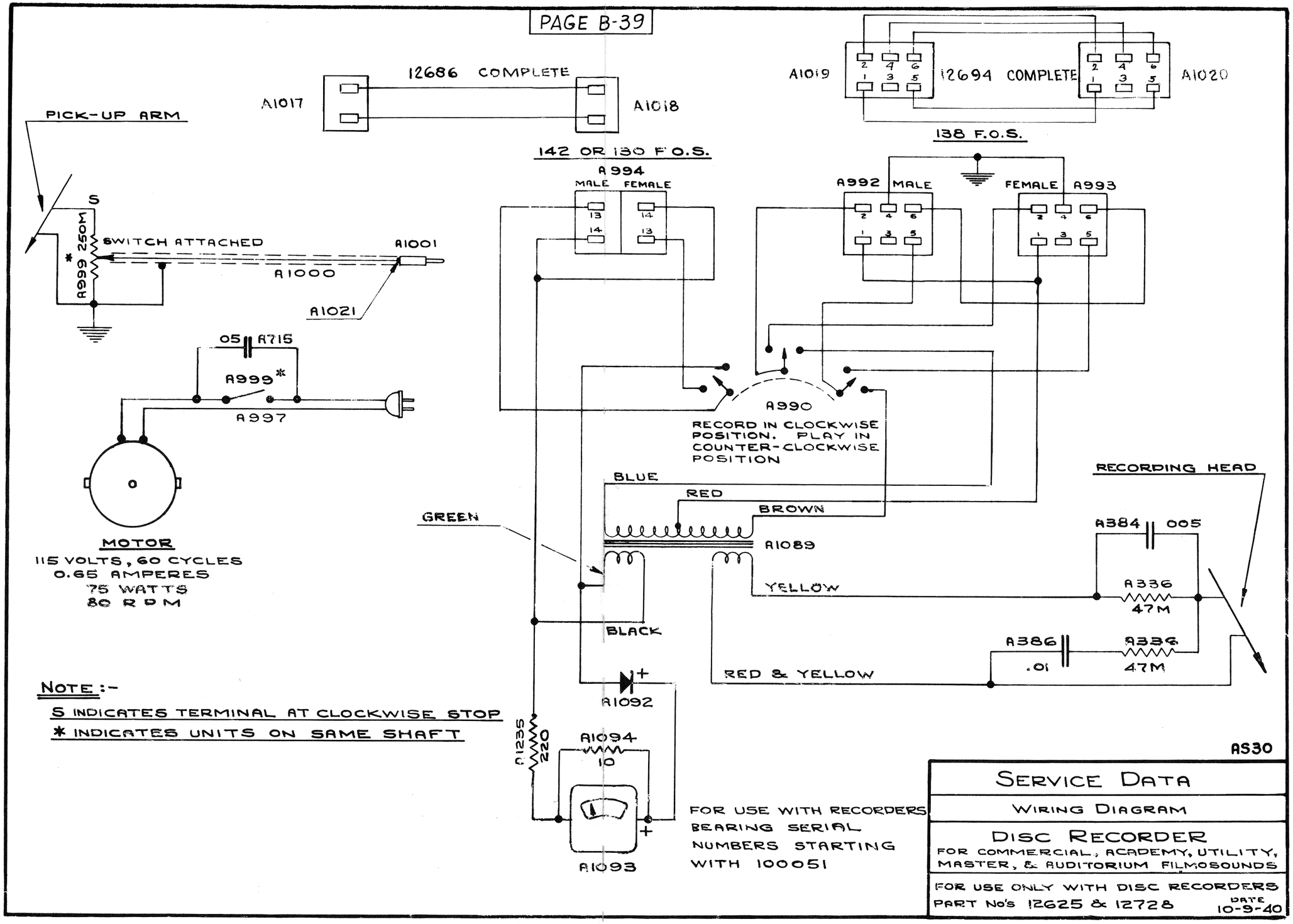
12686 COMPLETE
A1017
A1018
142 OR 130 F.O.S.
A1019
12694 COMPLETE
A1020
138 F.O.S.
PICK-UP ARM
S
A999 250M
SWITCH ATTACHED
A1001
A1000
A1021
A994
MALE
FEMALE
A992
MALE
FEMALE
A993
05
A715
A999*
A997
A990
RECORD IN CLOCKWISE POSITION. PLAY IN COUNTER-CLOCKWISE POSITION
RECORDING HEAD
BLUE
RED
BROWN
GREEN
A1089
A384
005
YELLOW
A336
47M
BLACK
A386
.01
A336
47M
RED & YELLOW
A1092
A1235
220
A1094
10
A1093
MOTOR
115 VOLTS, 60 CYCLES
0.65 AMPERES
75 WATTS
80 RPM
NOTE:-
S INDICATES TERMINAL AT CLOCKWISE STOP
* INDICATES UNITS ON SAME SHAFT
FOR USE WITH RECORDERS BEARING SERIAL NUMBERS STARTING WITH 100051
A530
SERVICE DATA
WIRING DIAGRAM
DISC RECORDER
FOR COMMERCIAL, ACADEMY, UTILITY, MASTER, & AUDITORIUM FILMOSOUNDS
FOR USE ONLY WITH DISC RECORDERS
PART No's 12625 & 12728
DATE 10-9-40

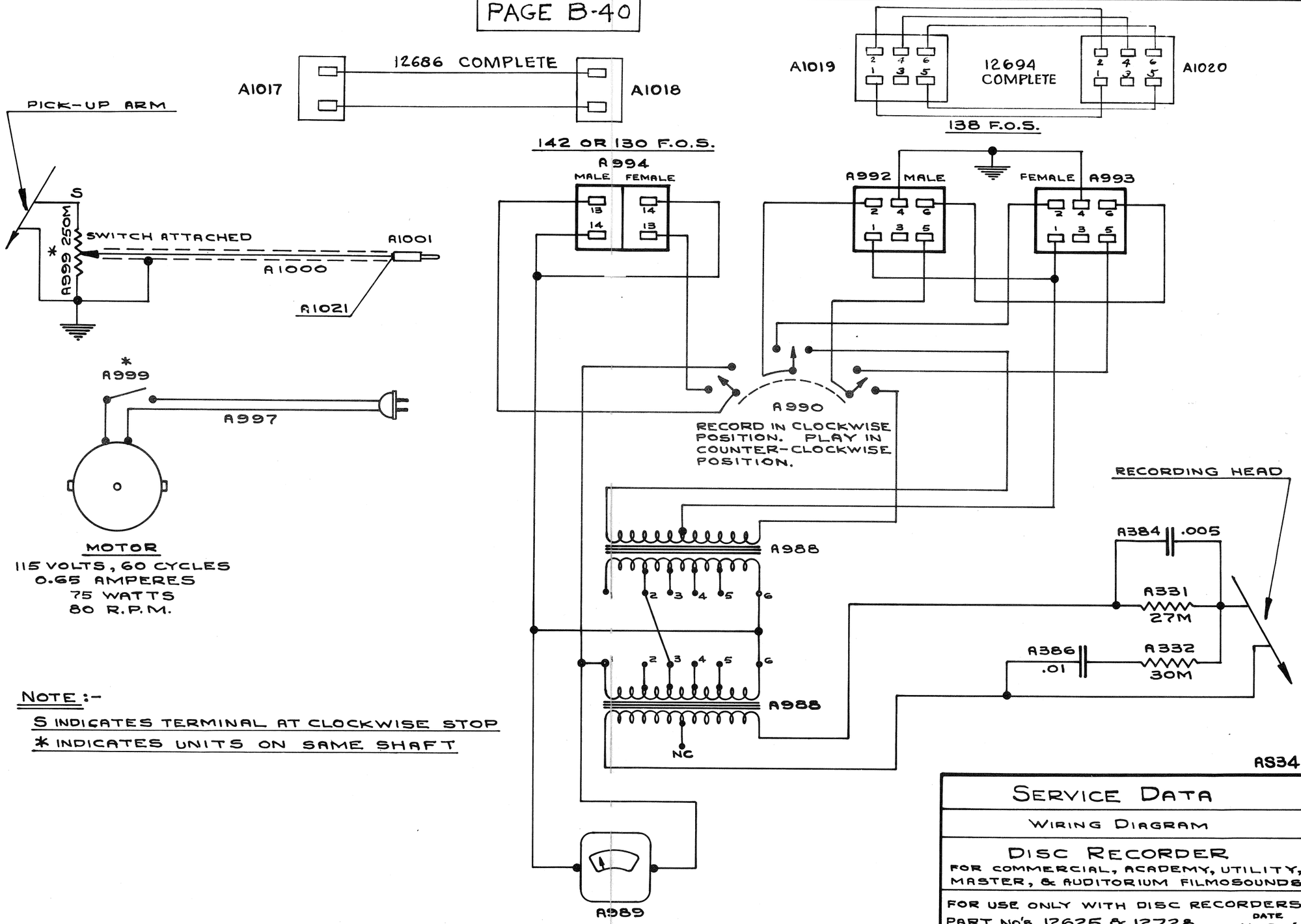

MOTOR
115 VOLTS, 60 CYCLES
0.65 AMPERES
75 WATTS
80 R.P.M.

NOTE:-
S INDICATES TERMINAL AT CLOCKWISE STOP
* INDICATES UNITS ON SAME SHAFT

SERVICE DATA

WIRING DIAGRAM

DISC RECORDER
FOR COMMERCIAL, ACADEMY, UTILITY, MASTER, & AUDITORIUM FILMOSOUNDS

FOR USE ONLY WITH DISC RECORDERS
PART No's 12625 & 12728

DATE
11-8-40

B 50

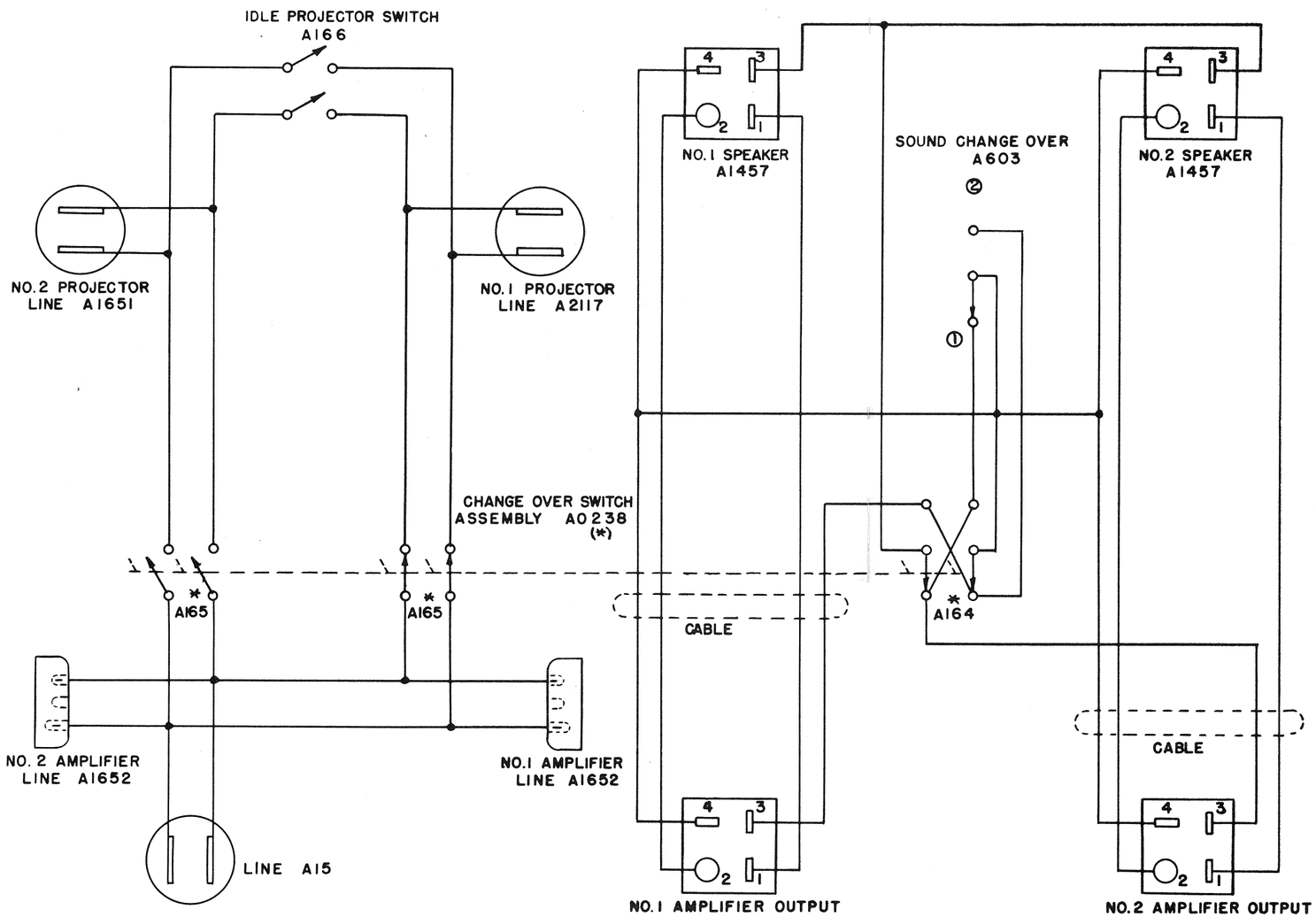

SWITCHES SHOWN IN PROJECTOR NO. 1 POSITION

AS102

BELL & HOWELL CO.		
CHANGE OVER BOX		
DATE 5-13-46	SERVICE DATA	DRAWN E.M.J. APVD

DES. 156A-D, V

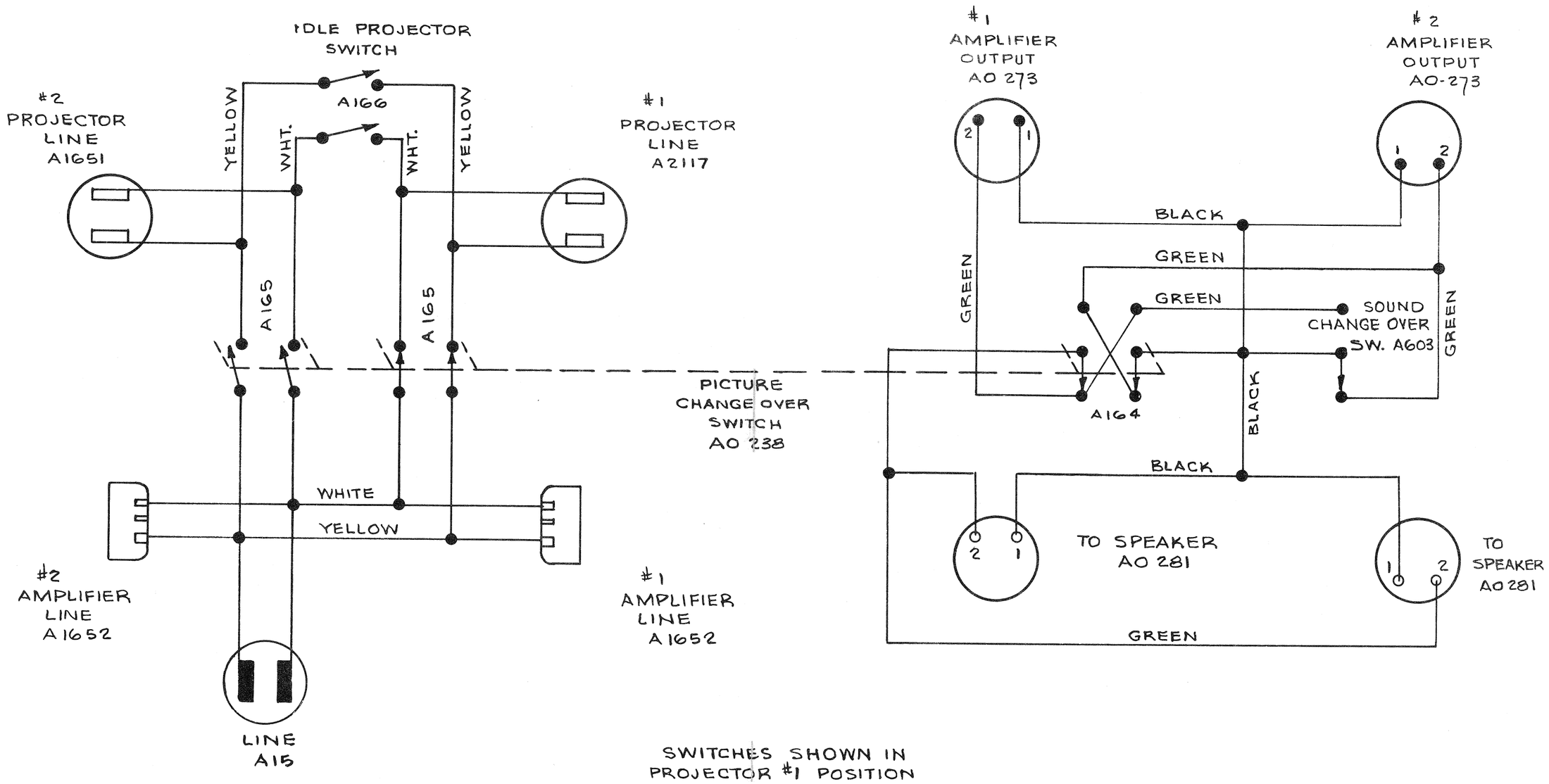

SERVICE DATA
CHANGE-OVER BOX
BELL & HOWELL CO., CHICAGO
PART: 13987 APVD. F.C.A.

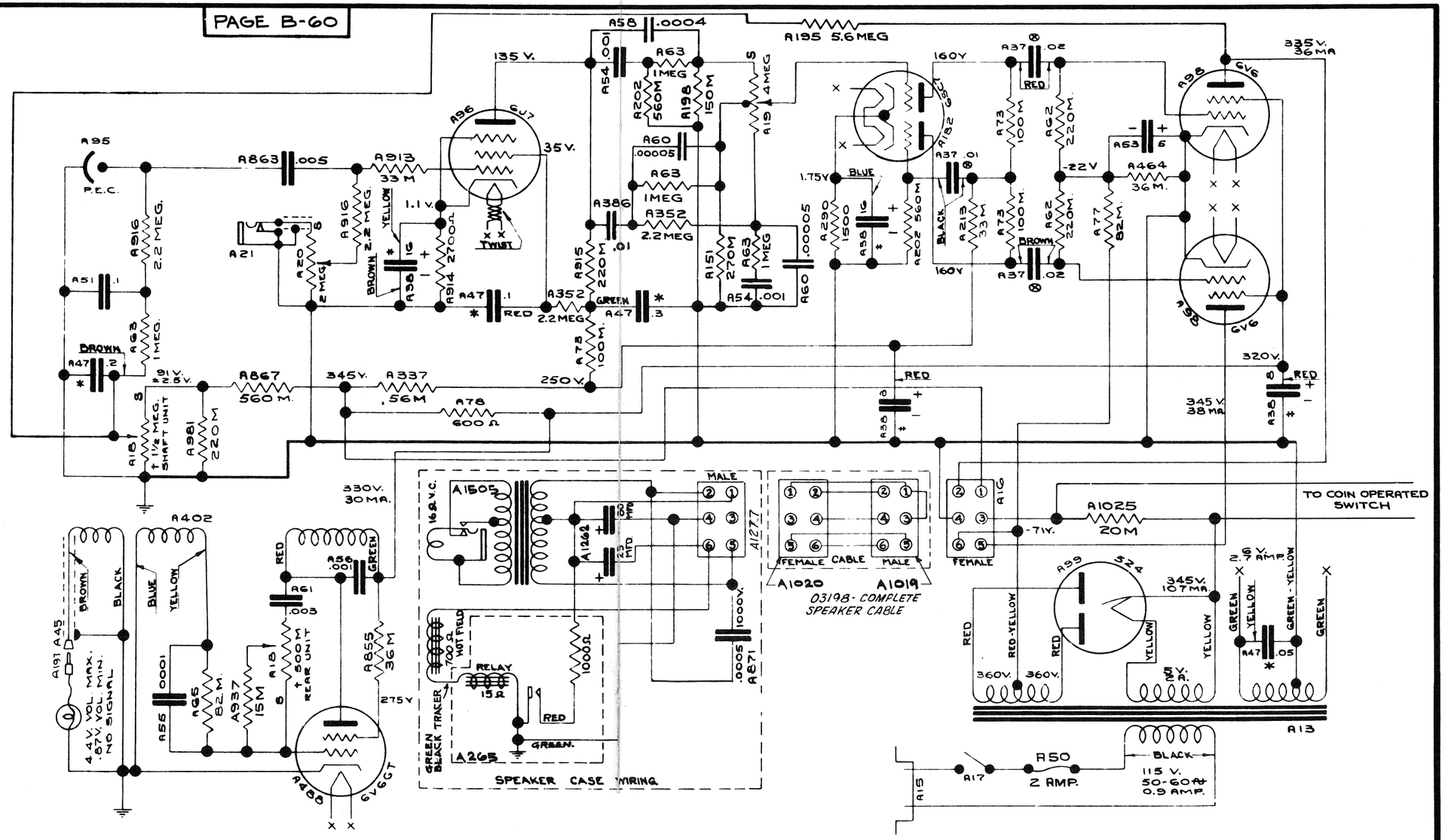

"S" INDICATES TERMINAL AT CLOCKWISE STOP. ALL VOLTAGES MEASURED WITH EXCITER LAMP FULL ON AND NO SIGNAL AT 115 V. LINE. ALL VOLTAGES MEASURED TO GROUND	
* ‡ ⊕ DENOTE CAPACITORS LOCATED IN BANK.	
‡ INDICATED CONTROLS ON SAME SHAFT	
WIRING COLOR CODE	
WHITE - GROUND	BROWN - SCREEN
YELLOW - CATHODE	BLUE - PLATE
RED - B+	BLACK - HEATER
GREEN - GRID	

A542

SERVICE DATA

AMPLIFIER WIRING DIAGRAM

60 CYCLE PHONOVISION FILMOSOUND

FOR USE ONLY WITH AMPLIFIER PART NO. AM12

DATE 8-5-40

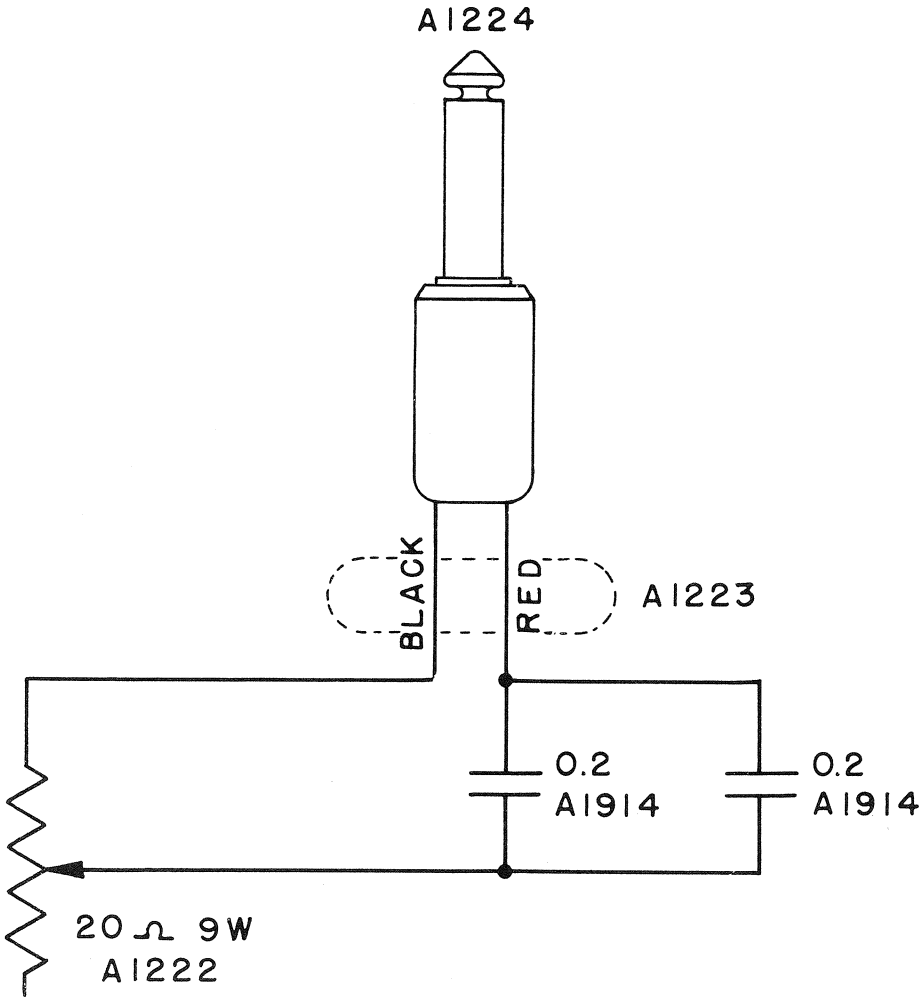

AS 103

SERVICE DATA
REMOTE VOLUME CONTROL
B & H #12828
5-1-46

B 70

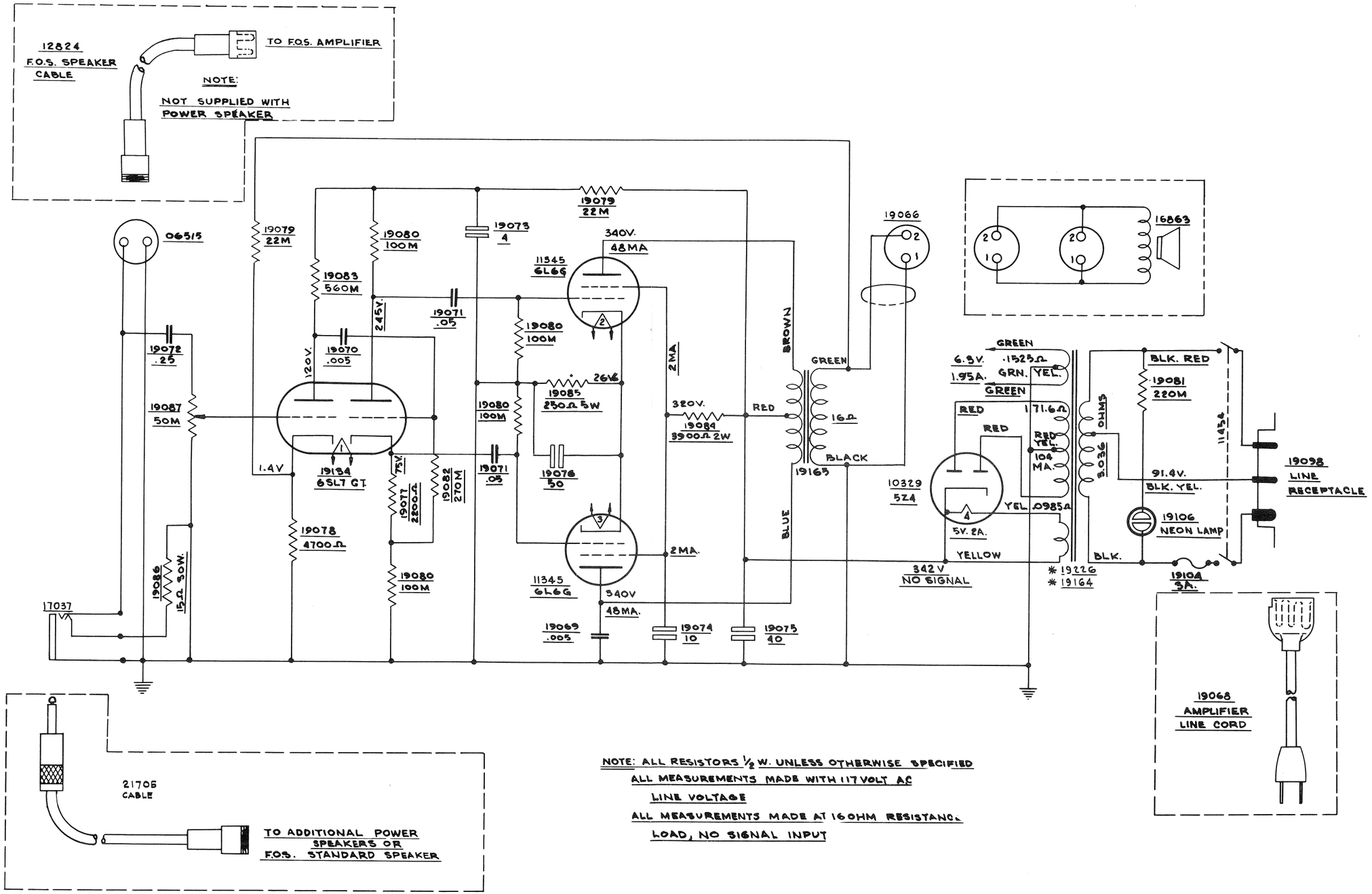

NOTE: ALL RESISTORS ½ W. UNLESS OTHERWISE SPECIFIED
ALL MEASUREMENTS MADE WITH 117 VOLT AC LINE VOLTAGE
ALL MEASUREMENTS MADE AT 16 OHM RESISTANCE LOAD, NO SIGNAL INPUT

* WIRING FOR 25 TO 60 CYCLE AND 50 TO 60 CYCLE POWER SPEAKERS IS THE SAME EXCEPT FOR THE FOLLOWING:
25 TO 60 ~ POWER TRANSFORMER PART # 19226
50 TO 60 ~ POWER TRANSFORMER PART # 19164

BELL & HOWELL CO. CHICAGO U.S.A.

25 WATT 60 CYCLE POWER SPEAKER SCHEMATIC

FOR USE WITH 06528 & 06517 AMPLIFIERS ONLY

DATE: 1-12-49	SERVICE DATA	DRAWN EG APVD:

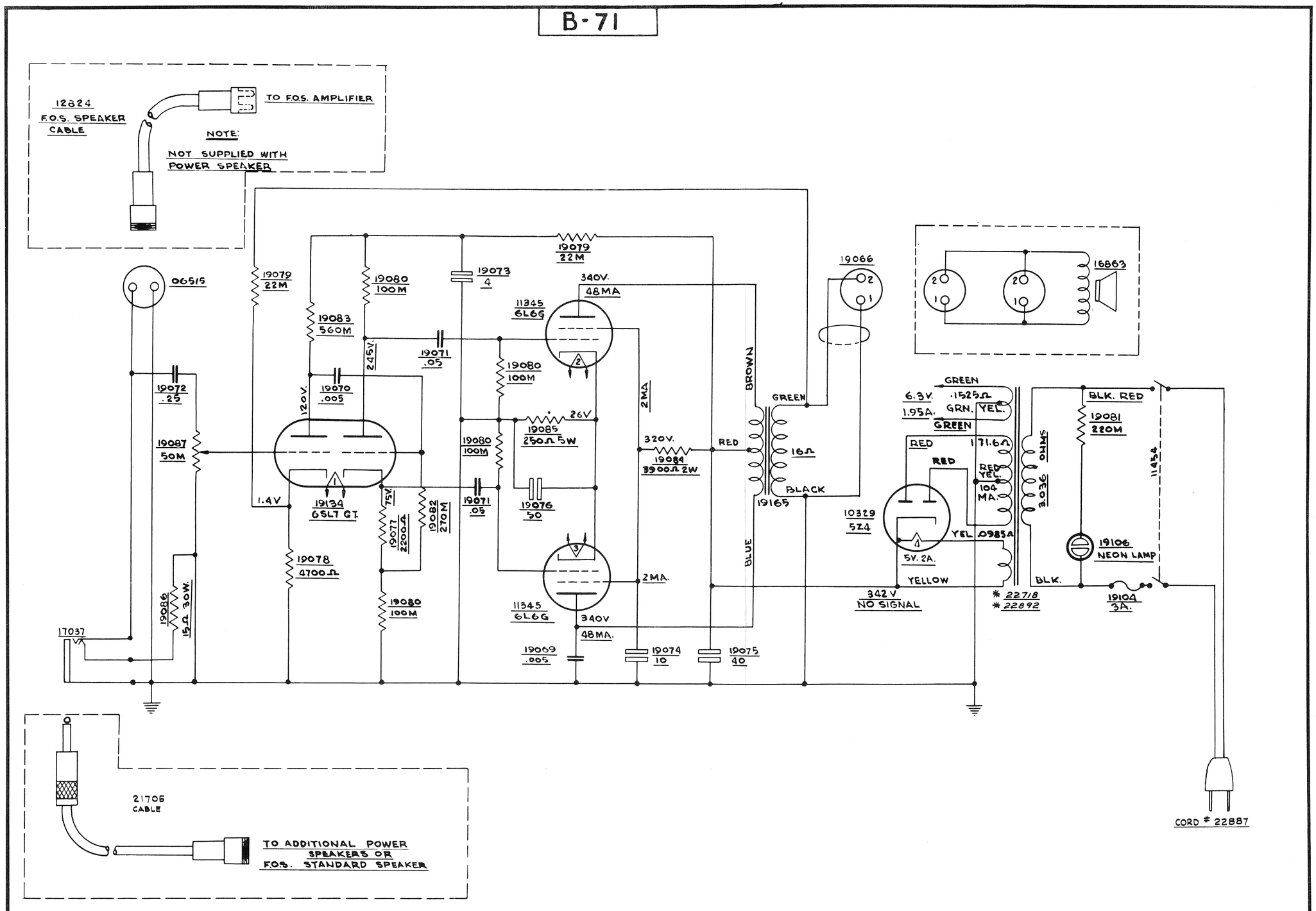

* WIRING FOR 25 TO 60 CYCLE AND 50 TO 60 CYCLE POWER SPEAKERS IS THE SAME EXCEPT FOR THE FOLLOWING:
25 TO 60 ~ POWER TRANSFORMER PART # 22892
50 TO 60 ~ POWER TRANSFORMER PART # 22718

REVISED 6-20-51

BELL & HOWELL CO. CHICAGO U.S.A.

25 WATT 60 CYCLE POWER SPEAKER
SCHEMATIC
FOR USE WITH 06517 & 06528 AMPLIFIERS ONLY

DATE: 5-23-51	SERVICE DATA	DRAWN wk APVD:

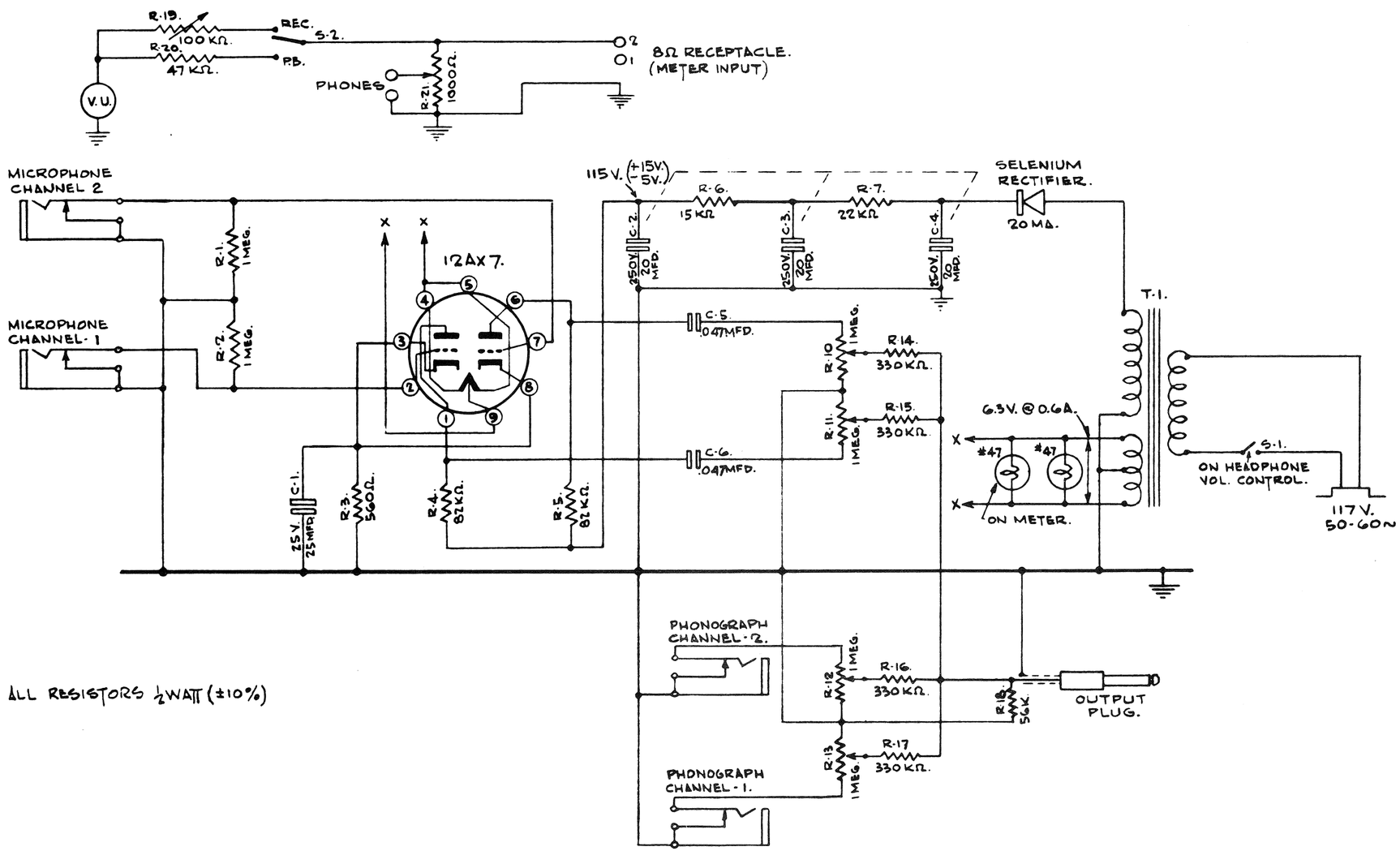

ALL RESISTORS ½WATT (±10%)

SERVICE DATA	
WIRING DIAGRAM	
MONITOR MIXER DESIGN 202	MODELS-ALL
FOR USE ONLY WITH PART NO. 25996	DATE 11-30-55

SECTION C

DESIGN 120, Models A, B, C, D

GENERAL INFORMATION.

The amplifier uses 2A3 tubes in the output. Filmosounds with serial numbers up to 161595 and from 162157 to 165485 inclusive are of this type. These amplifiers contain a microphone transformer with a 200-ohm primary and use a double-button carbon microphone with a Western Electric No. 110 or a Kellogg No. 191 plug. The voltage for the microphone is obtained from the 45 oscillator tube. The tone control and microphone volume control are mounted on the same shaft. The tone control is disconnected when the plug is inserted.

FILM VOLUME.

Film volume is controlled by changing the voltage on the oscillator tube. This in turn controls the voltage on the exciter lamp and the bucking voltage supplied to the phototube. As this bucking voltage is decreased, the positive voltage on the anode remaining constant, the effective voltage on the phototube is increased and the volume is higher. The 45 tube oscillates at a frequency of approximately 25,000 cycles.

SPEAKER.

Note that the speaker field is connected in the "B" negative lead. The voltage divider across the field provides the negative voltage for the bias on the 56 and 2A3 tubes. The 991 neon lamp, A709, acting through the 40,000-ohm resistor, maintains a constant bias voltage on

the 2A3 tubes. The 4 mfd condenser, A53, prevents flickering of the neon lamp and reduces hum. The voice coil impedance required is 15 ohms, and the plate load impedance is 10,000 ohms. The power output of each of these models is 10 watts.

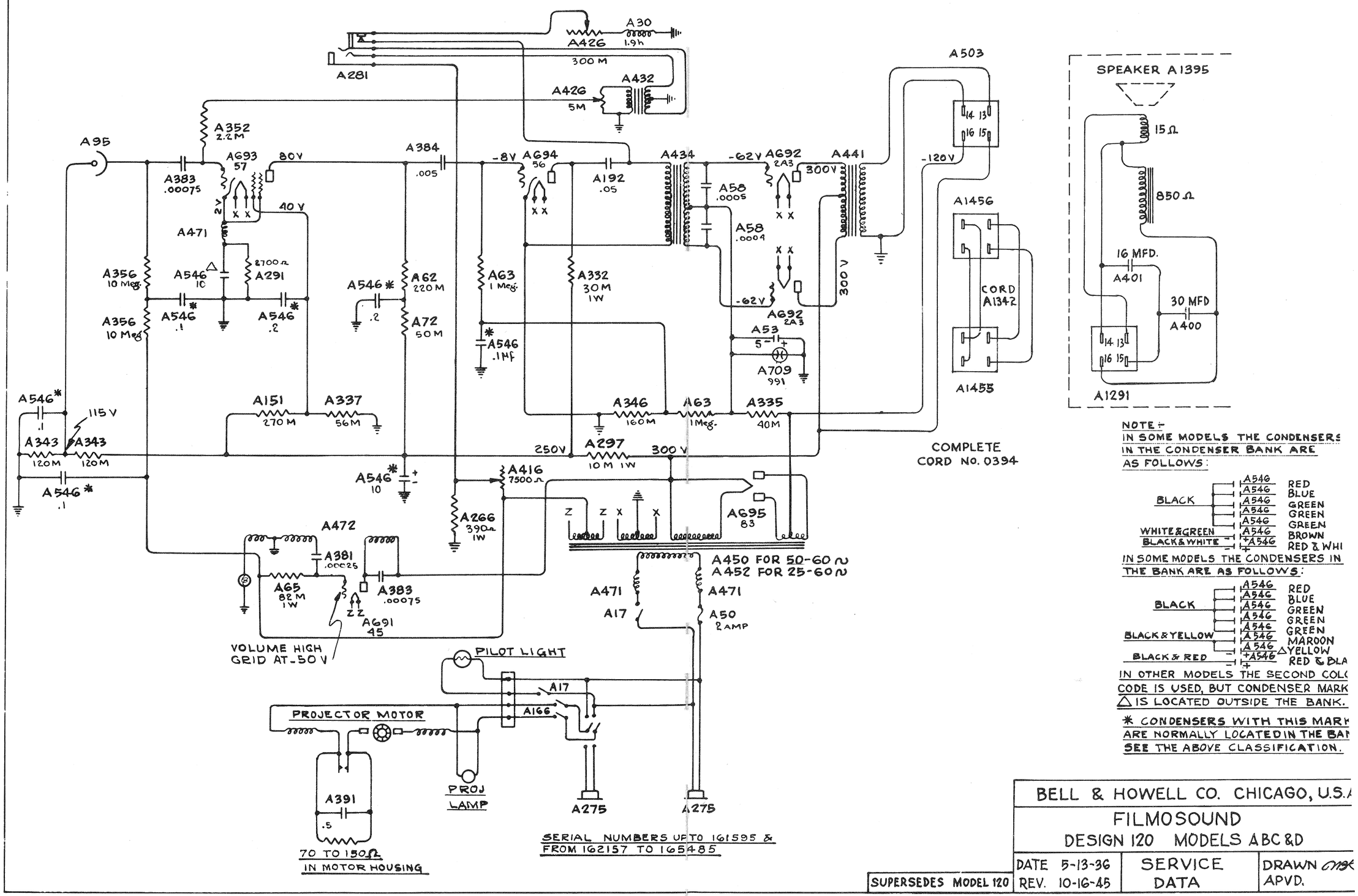

NOTE:-
IN SOME MODELS THE CONDENSERS IN THE CONDENSER BANK ARE AS FOLLOWS:

BLACK	A546	RED
	A546	BLUE
	A546	GREEN
	A546	GREEN
	A546	GREEN
WHITE & GREEN	A546	BROWN
BLACK & WHITE	+A546	RED & WHI

IN SOME MODELS THE CONDENSERS IN THE BANK ARE AS FOLLOWS:

BLACK	A546	RED
	A546	BLUE
	A546	GREEN
	A546	GREEN
BLACK & YELLOW	A546	GREEN
	A546	MAROON
BLACK & RED	+A546 △	YELLOW
		RED & BLA

IN OTHER MODELS THE SECOND COL CODE IS USED, BUT CONDENSER MARK △ IS LOCATED OUTSIDE THE BANK.

* CONDENSERS WITH THIS MARK ARE NORMALLY LOCATED IN THE BA SEE THE ABOVE CLASSIFICATION.

BELL & HOWELL CO. CHICAGO, U.S.A

FILMOSOUND
DESIGN 120 MODELS ABC & D

DATE 5-13-36	SERVICE DATA	DRAWN
REV. 10-16-45		APVD.

SUPERSEDES MODEL 120

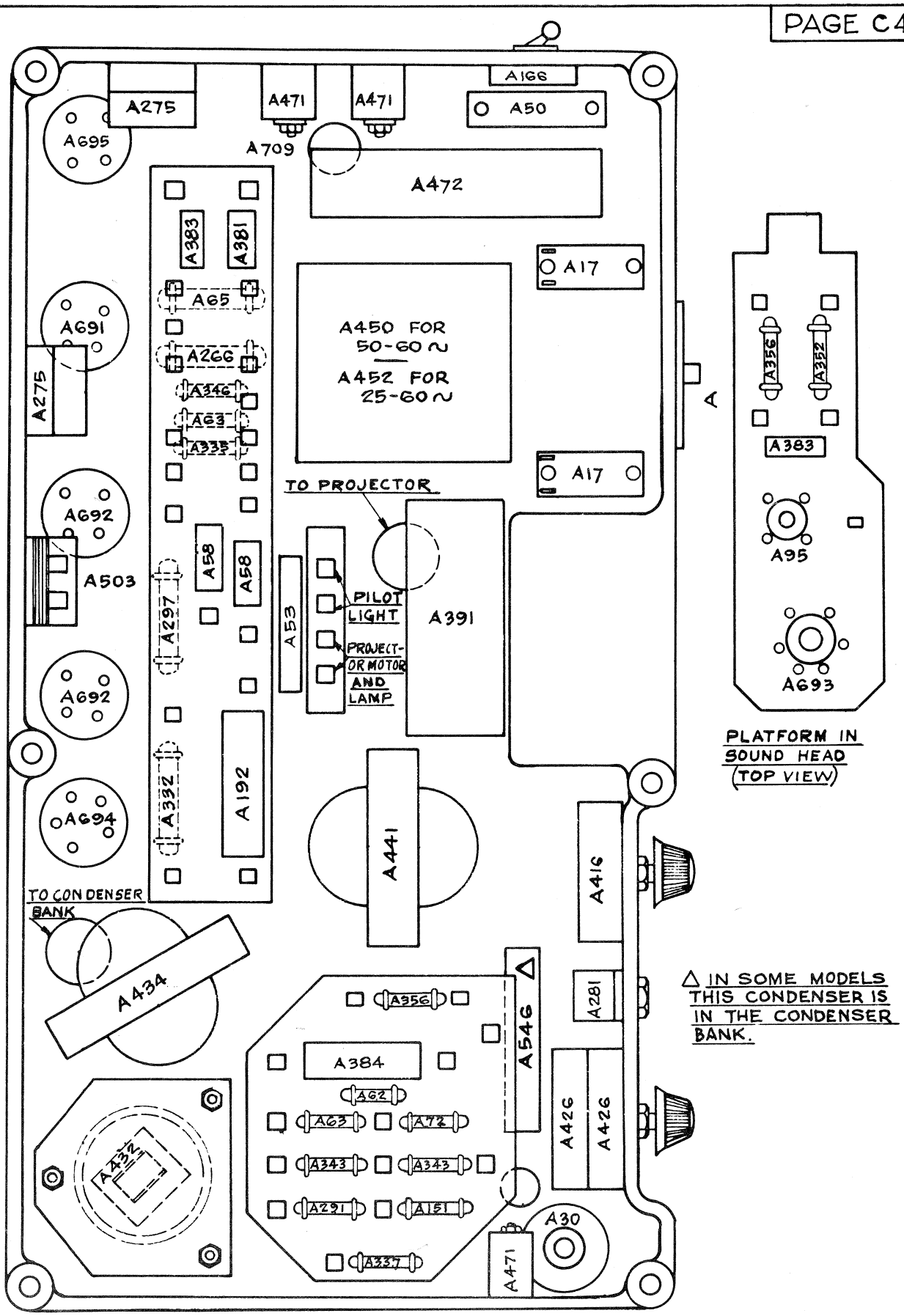

SERVICE DATA

BOTTOM VIEW OF AMPLIFIER

FILMOSOUND

DESIGN 120 — MODELS A B C & D

FOR USE ONLY WITH PART NO. 01849 — DATE 5-13-36 REV. 10-16-45

SUPERSEDES MODEL 120

DESIGN 120, SPECIAL ERPI MODEL

GENERAL INFORMATION.

This projector has a standard Design 120 mechanism but has only a pre-amplifier which terminates in a low impedance line. The final amplifier was manufactured by Western Electric. It is located in the speaker and uses Western Electric special parts and tubes. Due to the special design of the final amplifiers, we have never serviced them and recommend that you do not attempt their repair.

VOLUME REGULATION.

Complaints of poor volume regulation can be corrected by changing the original output circuit to the one shown on the schematic diagram, page C-6. Parts are obtainable from Bell & Howell Company.

TESTING.

For testing, the output may be connected into the microphone input of a standard Filmosound of almost any model. The upper and lower right terminals of the output receptacle when connected together will form the sleeve connection to the microphone plug, and the lower left terminal, the tip connection. Headphones may also be used but the output will be extremely low.

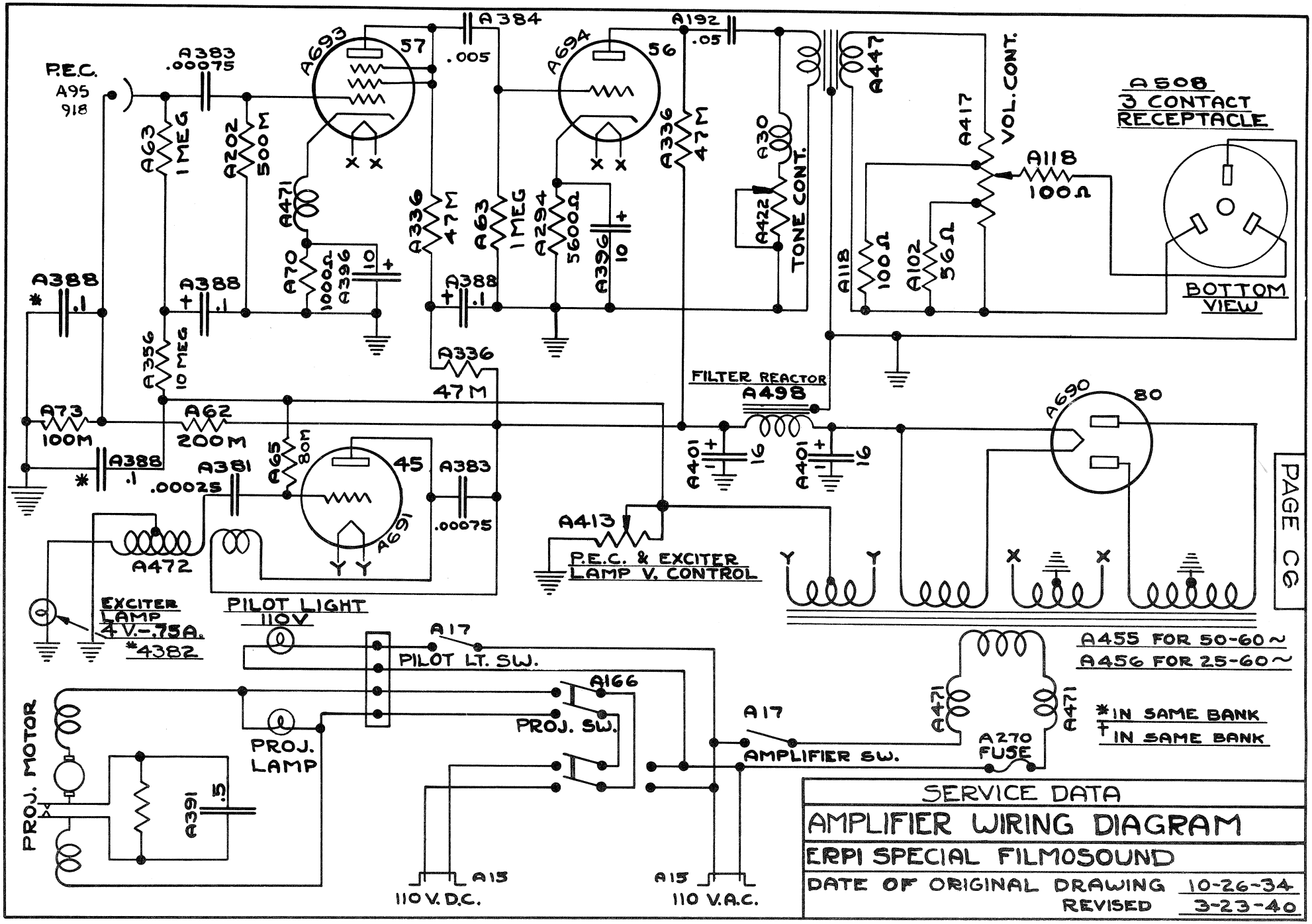

SERVICE DATA

AMPLIFIER WIRING DIAGRAM

ERPI SPECIAL FILMOSOUND

DATE OF ORIGINAL DRAWING 10-26-34

REVISED 3-23-40

DESIGN 120, MODELS B, D

(with hum balancer and adjustment on phototube voltage)

- - - - - - - - - - -

GENERAL INFORMATION.

This amplifier uses 2A3 tubes in the output. Filmosounds with serial numbers from 161963 to 161965, 161967 to 161991, 161993 to 161999, 162010 to 162054, 165486 to 165493, and 171468 to 171479 are of this type. These Filmosounds can be distinguished by the hum balancing control mounted on top of the amplifier casting between the amplifier and pilot light switches, and the phototube voltage control on top of the casting above the volume control.

There is no microphone transformer in this amplifier. A 5,000-ohm input is used, and voltage is supplied on the ring contact of the jack. A double-button carbon microphone with an external transformer is used. A Western Electric No. 110 or Kellogg No. 191 plug should be used.

FILM VOLUME.

Film volume is controlled by varying the voltage on the exciter lamp with a variable series resistor. Thus, the oscillator is not changed. The voltage on the phototube is adjusted by control A425. Thus, the phototube is not controlled by the volume control and will pick up any light reaching it, producing a hum in the speaker. Turning the volume control down will not eliminate this hum. It is important that the phototube in these Filmosounds be shielded from 60-cycle light if this hum is to be avoided.

The hum balancer adjusts the bias on the 2A3 tubes, and, in this way, compensates for unmatched tubes having different plate currents.

The bias voltage for the 2A3 tubes is obtained from the oscillator, by the drop in resistor A333. As in the other amplifier using 2A3 tubes, the 991 neon lamp regulates the bias voltage by acting through resistor A332. However, in this amplifier, if the 991 neon lamp does not function the bias becomes so high that the tubes will not operate. Sometimes the oscillator will not start if the amplifier is turned on with the volume control advanced. Under these conditions the 2A3 tubes have no bias and the fuse will blow. This point should be watched.

SPEAKER.

Note that the speaker field and resistor A380 are connected across the "B" supply. The current through this circuit, plus the plate current of the oscillator tube, furnishes the field excitation. Filtering is accomplished by condensers as no filter choke is used.

WARNING

Do not press on resistor A380 when handling this amplifier. It will last indefinitely if not disturbed but will not withstand any flexing.

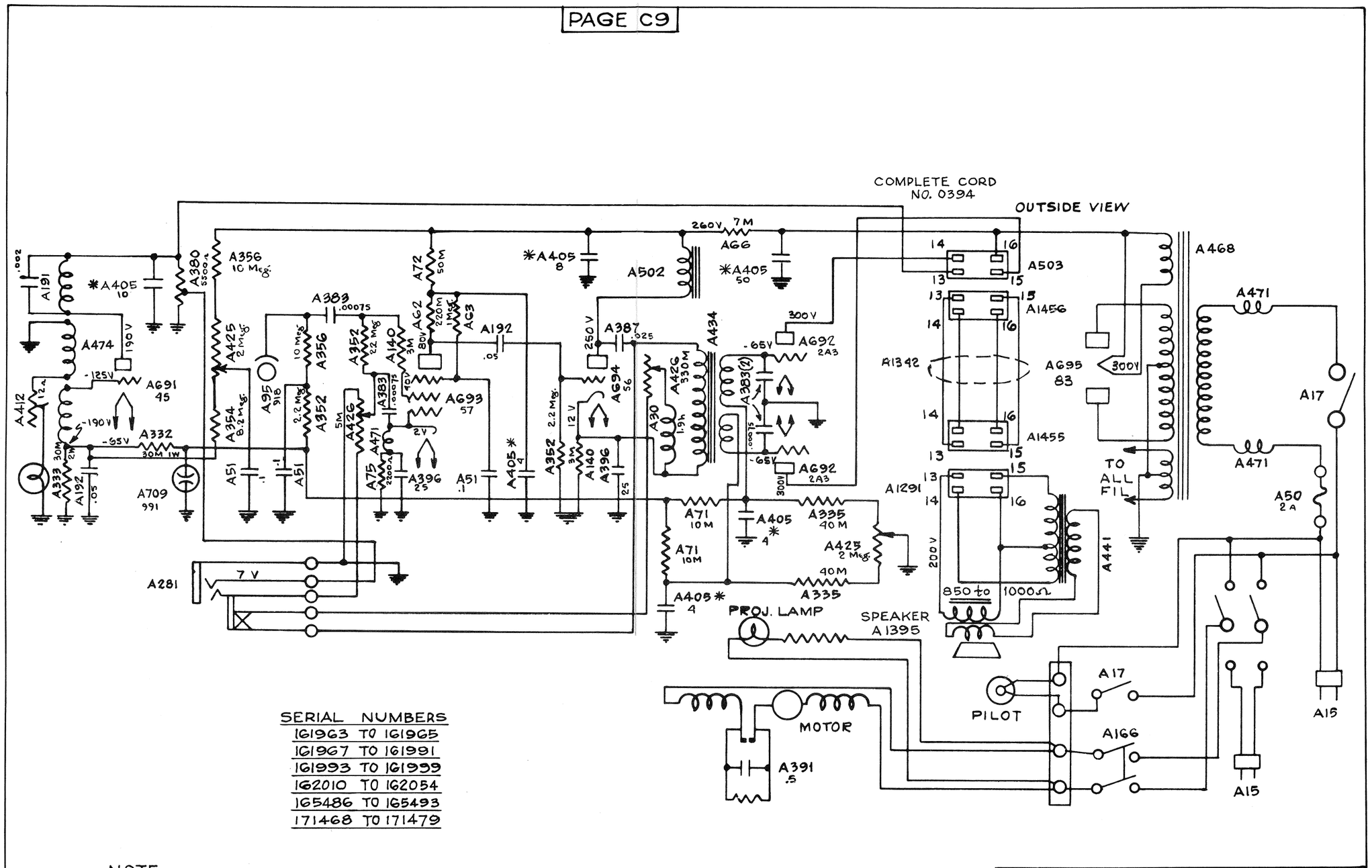

SERIAL NUMBERS

161963 TO 161965
161967 TO 161991
161993 TO 161999
162010 TO 162054
165486 TO 165493
171468 TO 171479

NOTE

*MOUNTED IN CONDENSER BANK.

SERVICE DATA	
WIRING DIAGRAM	
FILMOSOUND DESIGN 120 MODELS B&D WITH HUM BALANCER	
FOR USE ONLY WITH PART NO. 02564	DATE 5-21-36 REV. 10-17-45

SUPERSEDES MODEL A

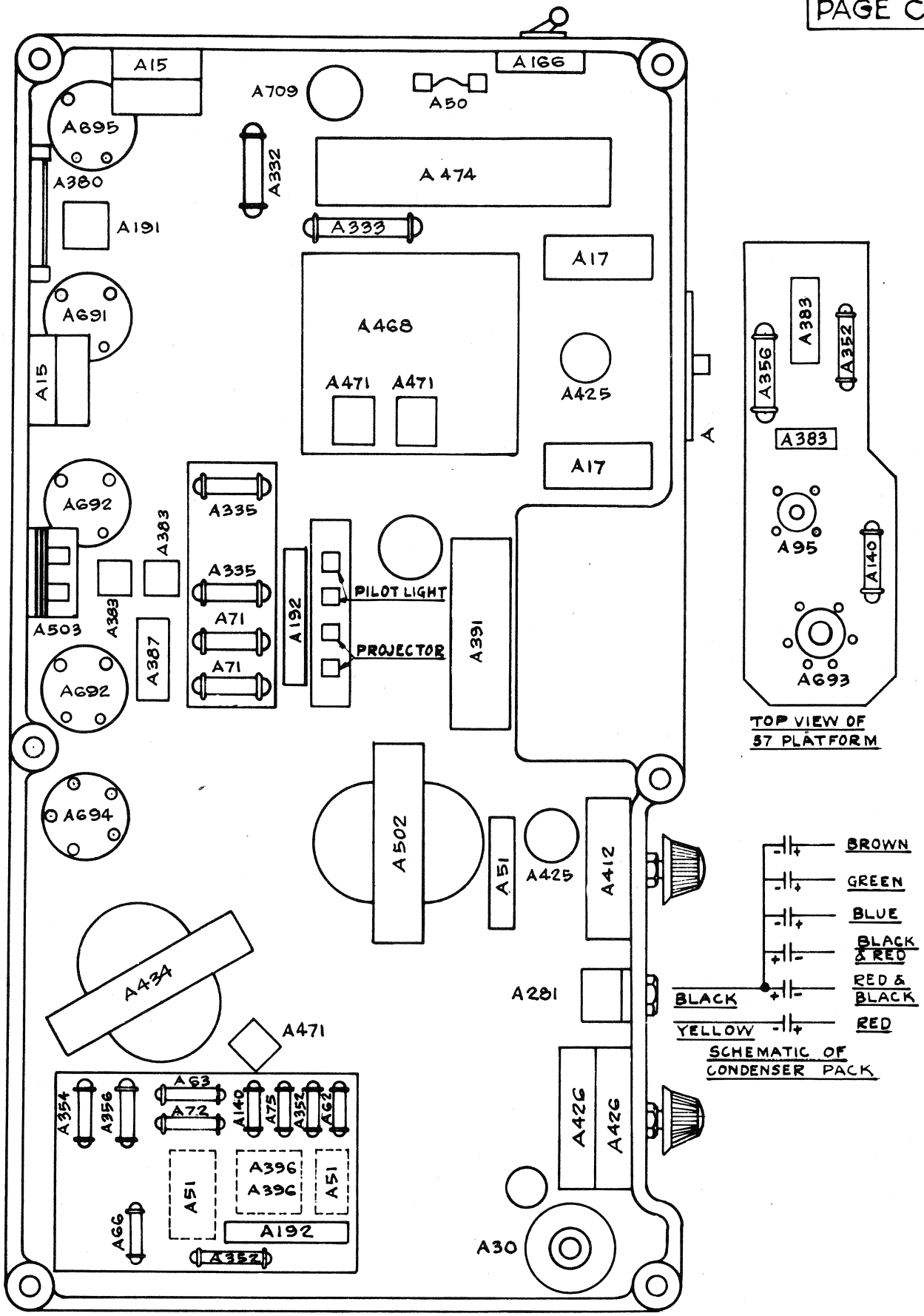

SERVICE DATA	
BOTTOM VIEW OF AMPLIFIER	
FILMOSOUND	
DESIGN 120 MODELS B & D	WITH HUM BALANCER
FOR USE ONLY WITH PART NO. 02564	DATE 5-23-36 REV. 10-17-45

SUPERSEDES MODEL A

DESIGN 120 - MODELS E, F, G, H

GENERAL INFORMATION.

In this type of amplifier, 6B5 output tubes are used. All of the tubes are of the 6-volt series. The 991 neon lamp is not used, as the 6B5 tubes are self-biased. This Filmosound uses a diaphragm-type crystal microphone with a Yaxley No. 75A plug. The cell-type crystal microphone may also be used, but the output is not as great. The sleeve of the plug is the ground terminal.

FILM VOLUME.

Film volume is controlled by varying the voltage on both the phototube and the exciter lamp.

SPEAKER.

A 12-inch speaker is used, with its 6,850-ohm field connected directly across the B supply. A tap on the field provides reduced voltage for the oscillator. The speaker voice coil has an impedance of 18 ohms.

CAUTION

Do not leave the lead to the exciter lamp close to the microphone volume control when working on this amplifier, as this may cause feed back. Keep the lead straight and pulled back toward the power transformer.

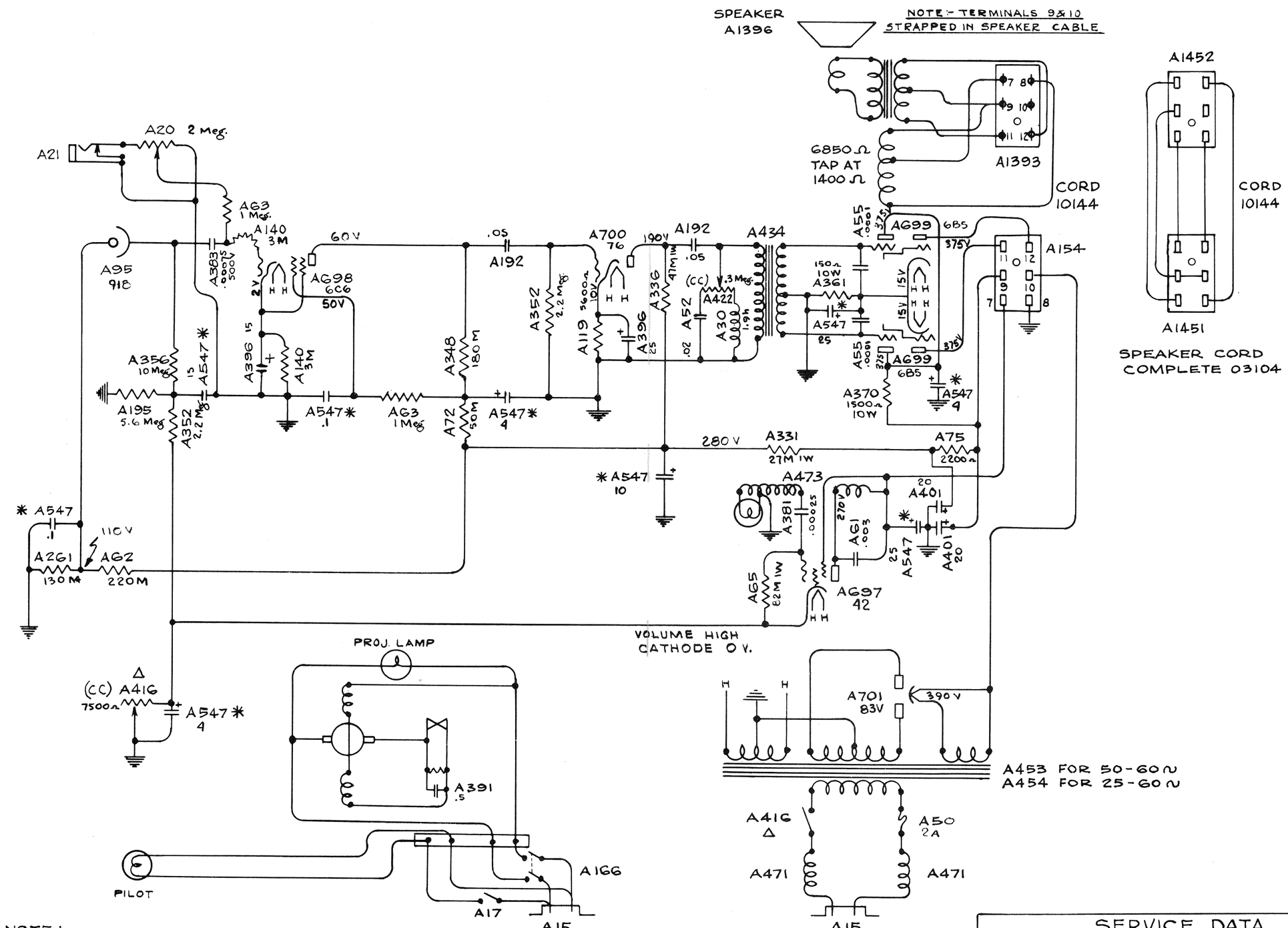

NOTE:-

△ COMBINED IN SAME UNIT

✱ MOUNTED IN CONDENSER BANK

SERVICE DATA	
WIRING DIAGRAM	
FILMOSOUND	
DESIGN 120	MODELS E & F
FOR USE ONLY WITH PART NO. 02668	DATE 5-22-36 REV. 10-18-45

SUPERSEDES MOD. E & F 1-20-36

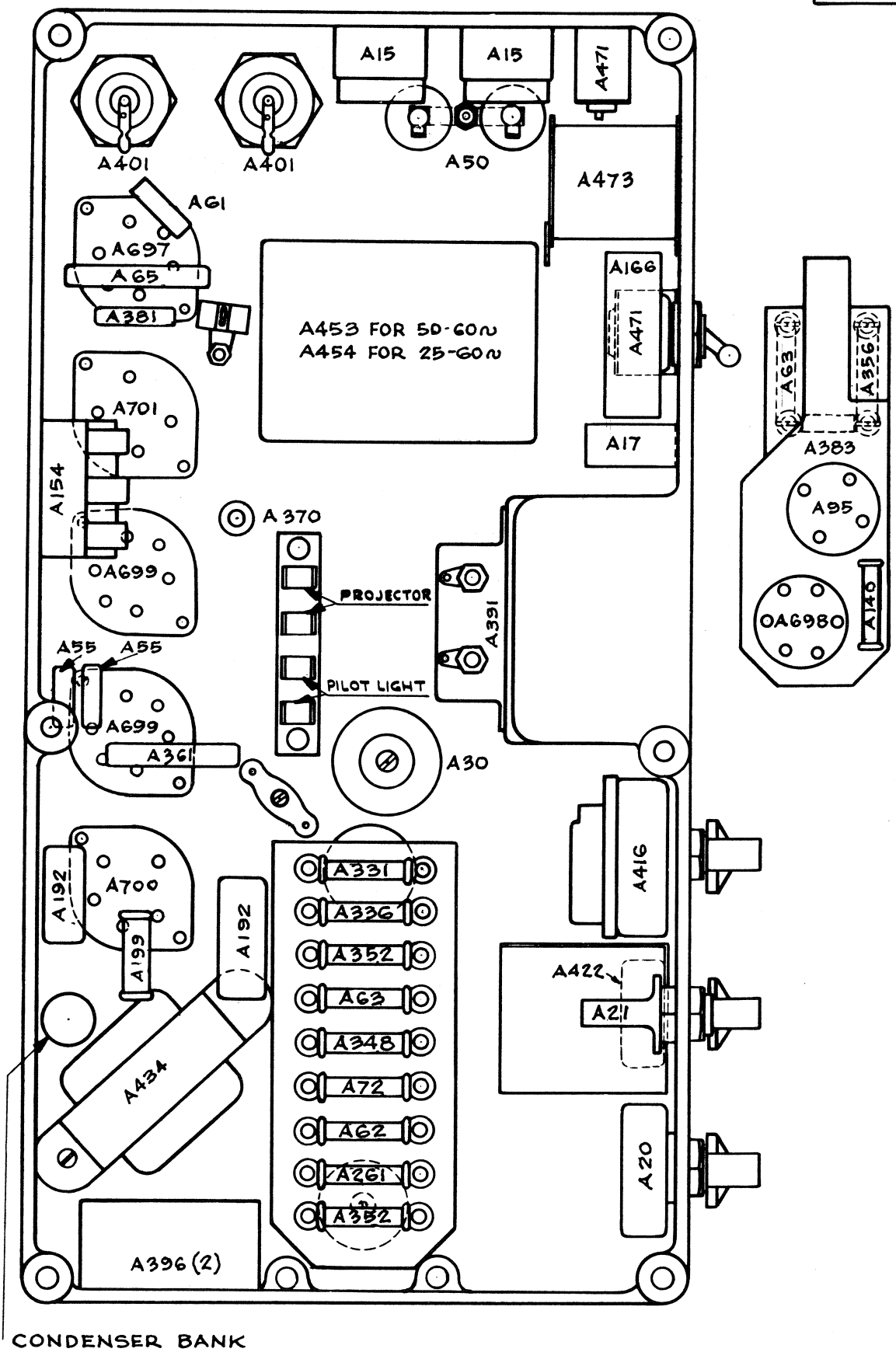

SERVICE DATA	
BOTTOM VIEW OF AMPLIFIER	
FILMOSOUND	
DESIGN 120	MODELS E&F
FOR USE ONLY WITH PART NO. 02668	DATE 1-21-36 REV. 10-19-45

SUPERSEDES MOD. ABC&D

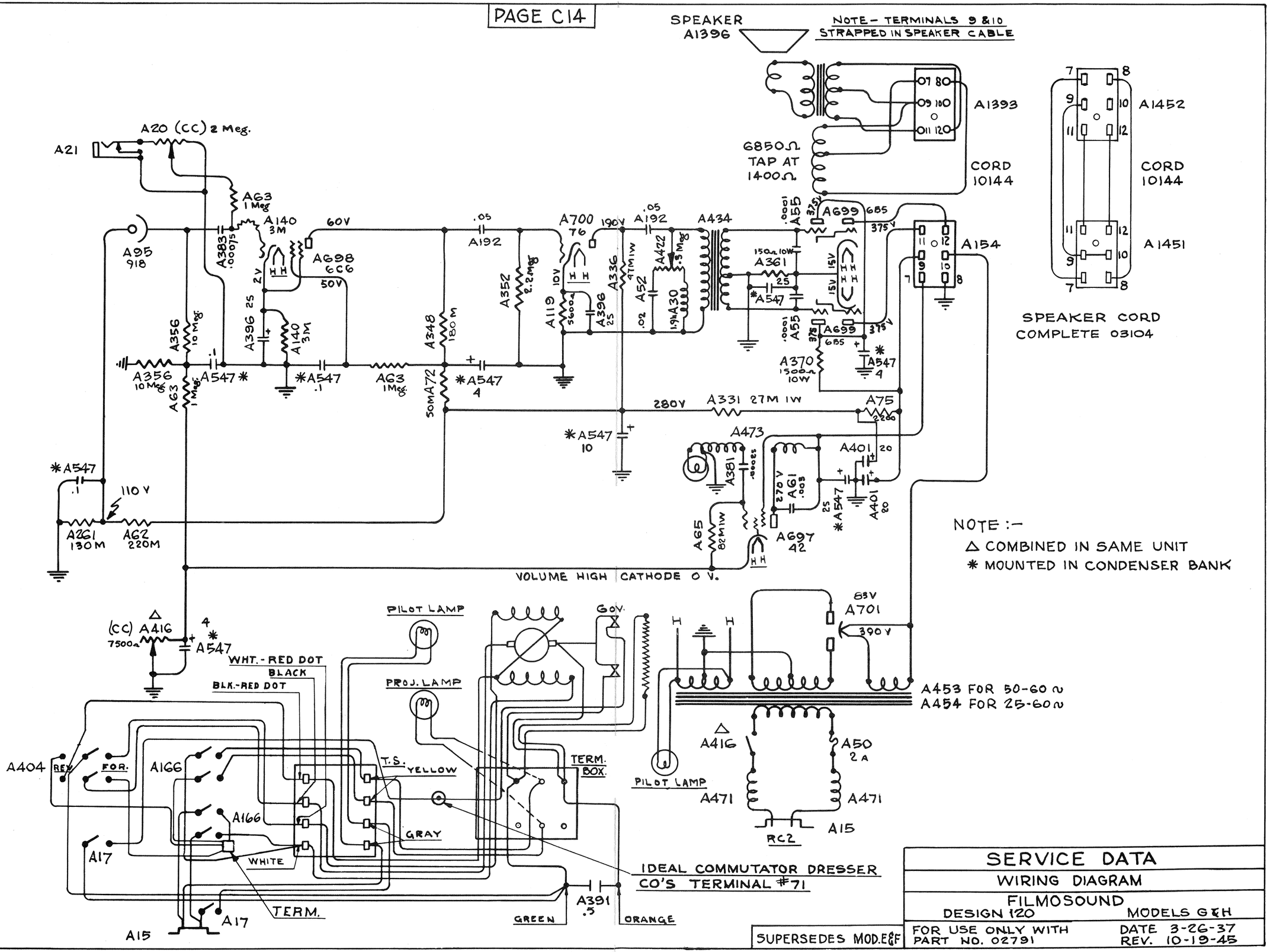

SERVICE DATA	
WIRING DIAGRAM	
FILMOSOUND	
DESIGN 120	MODELS G & H
FOR USE ONLY WITH PART NO. 02791	DATE 3-26-37 REV. 10-19-45

SUPERSEDES MOD. E & F

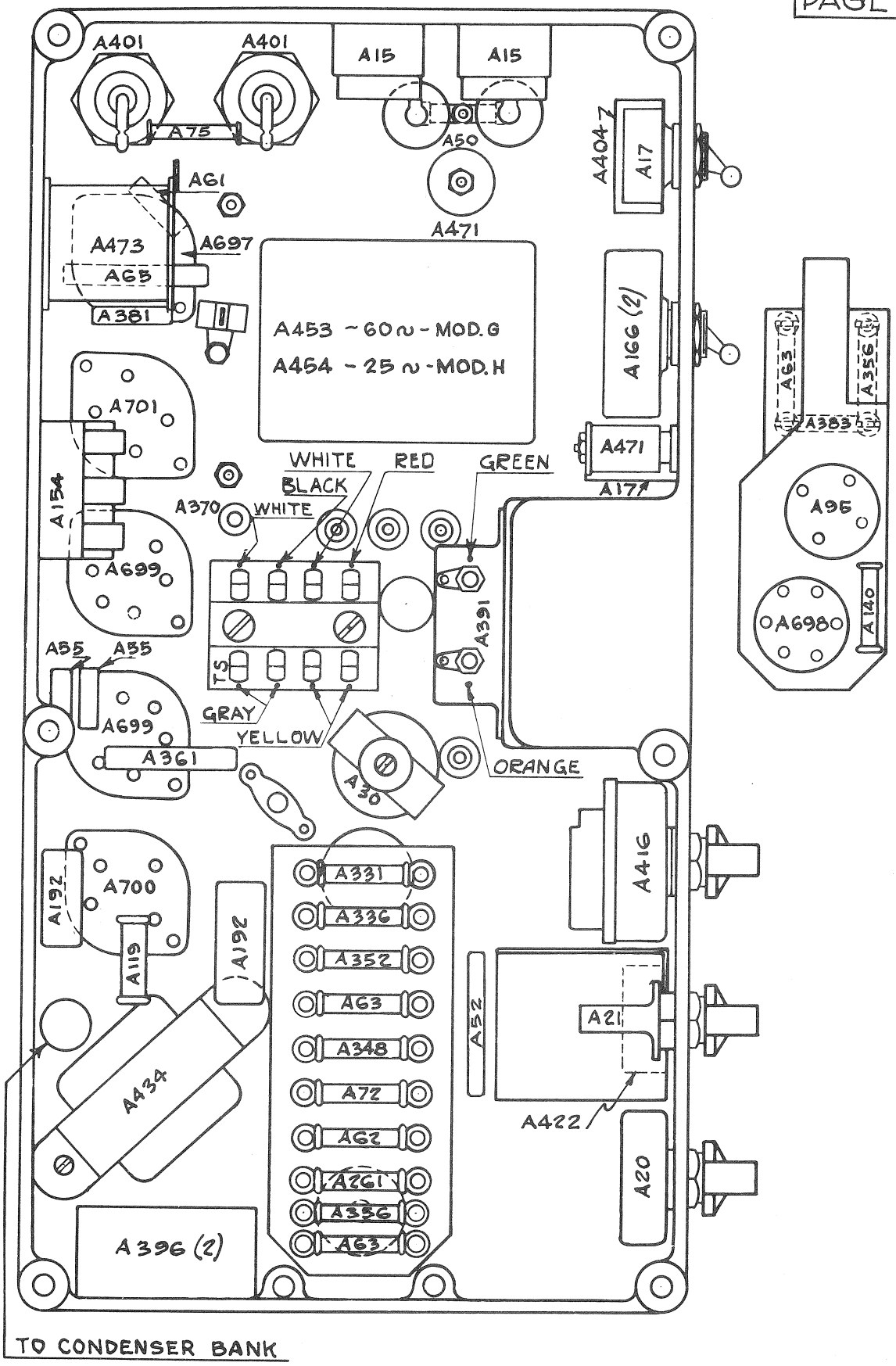

SERVICE DATA	
BOTTOM VIEW OF AMPLIFIER	
FILMOSOUND	
DESIGN 120	MODELS G&H
FOR USE ONLY WITH PART NO. 02791	DATE 3-29-37 REV. 10-22-45

SUPESEDES MOD. E&F

DESIGN 120 - Model J (60-CYCLE), K (25-CYCLE)

GENERAL INFORMATION.

In this amplifier, two 6L6 tubes are used in the output. The amplifier uses a crystal microphone with a Mallory type 75A plug, No. A1378. These amplifiers were made in two series of which very few of the first (page C-17) will be encountered. The second series is readily distinguished by the switch located on the microphone control. This switch must be in the "off" position for the amplifier to operate with film. A close examination of the circuit (page C-19) will show that the input circuits to the second tube are transferred. Also note that the oscillator tube was changed from a pentode to a triode connected pentode.

A three-ampere fuse is used.

The power output is 25 watts.

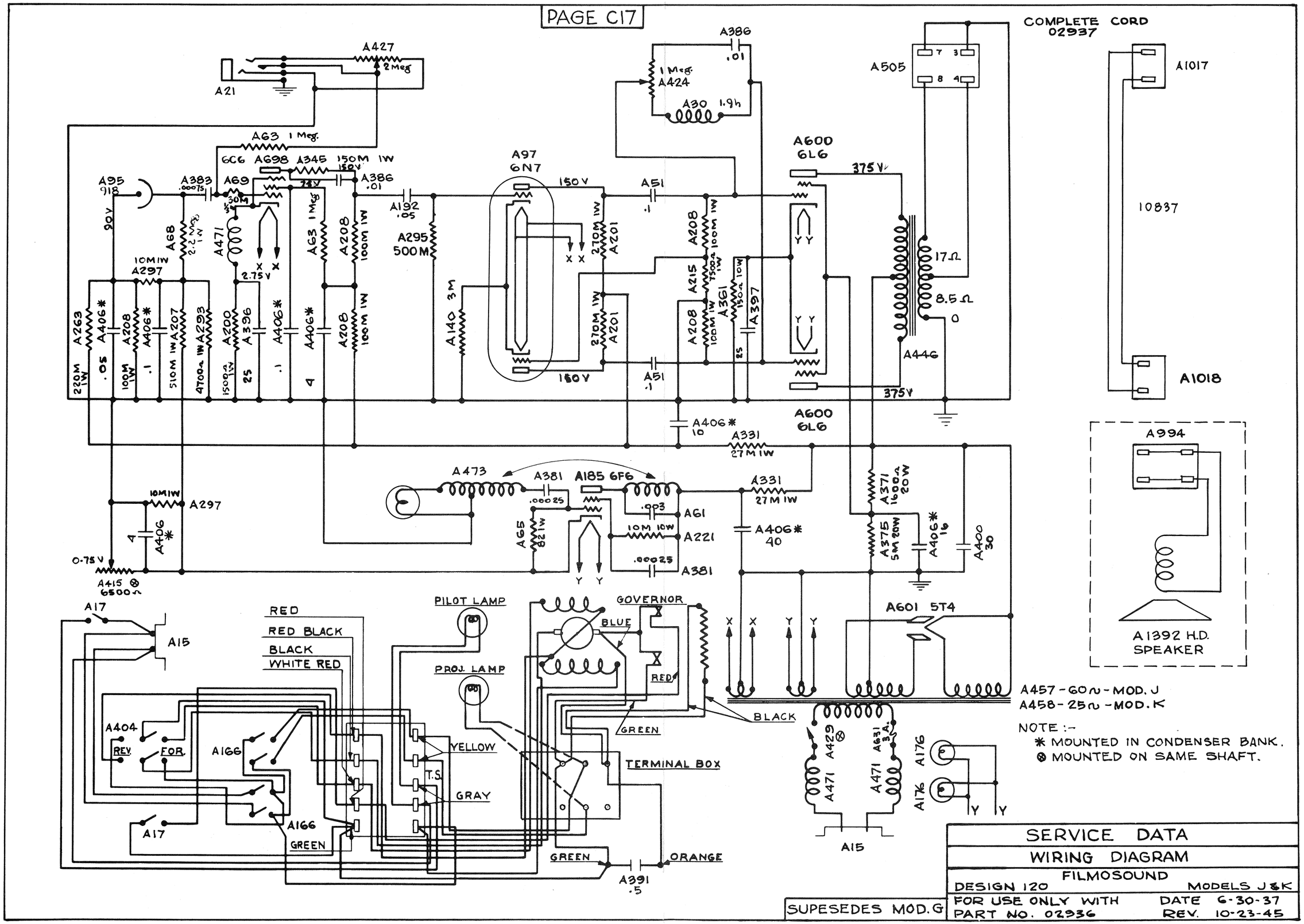
PAGE C17
COMPLETE CORD
02937
A1017
10837
A1018
A427
2 Meg
A21
A386
.01
1 Meg.
A424
A30
1.9h
A505
A63 1 Meg.
6C6
A698
A345
150M 1W
150V
A386
.01
A95
918
A383
.00075
A69
30M
75V
A192
.05
A97
6N7
150V
A51
.1
A600
6L6
375V
90V
A68
2.2 Meg
1W
A471
A63 1 Meg
A208
100M 1W
A295
500M
270M 1W
A201
A208
100M 1W
A215
1500Ω 1W
A361
150Ω 10W
A397
25
17Ω
8.5Ω
0
A446
10M 1W
A297
2.75V
A263
220M 1W
A406*
.05
A208
100M 1W
A406*
.1
A207
510M 1W
A293
4700Ω 1W
A200
1500Ω 1W
A396
25
A406*
.1
A406*
4
A208
100M 1W
A140 3M
A51
.1
A406*
10
A331
27M 1W
A994
A473
A381
.00025
A185 6F6
.003
A61
10M 10W
A221
A381
A65
82 1W
A331
27M 1W
A371
1600Ω
20W
A375
5M 20W
A406*
16
A400
30
A406*
40
10M 1W
A297
A406*
4
0-75V
A415 ⊗
6500Ω
A17
A15
RED
RED BLACK
BLACK
WHITE RED
PILOT LAMP
PROJ. LAMP
GOVERNOR
BLUE
RED
GREEN
BLACK
A601 5T4
A1392 H.D.
SPEAKER
A457 - 60Ω - MOD. J
A458 - 25Ω - MOD. K
NOTE :-
* MOUNTED IN CONDENSER BANK.
⊗ MOUNTED ON SAME SHAFT.
A404
REV.
FOR.
A166
YELLOW
T.S.
GRAY
TERMINAL BOX
A17
A166
GREEN
GREEN
ORANGE
A391
.5
A429 ⊗
A471
A631 3A.
A471
A176
A176
A15
SERVICE DATA
WIRING DIAGRAM
FILMOSOUND
DESIGN 120
MODELS J & K
SUPESEDES MOD. G
FOR USE ONLY WITH
PART NO. 02936
DATE 6-30-37
REV. 10-23-45

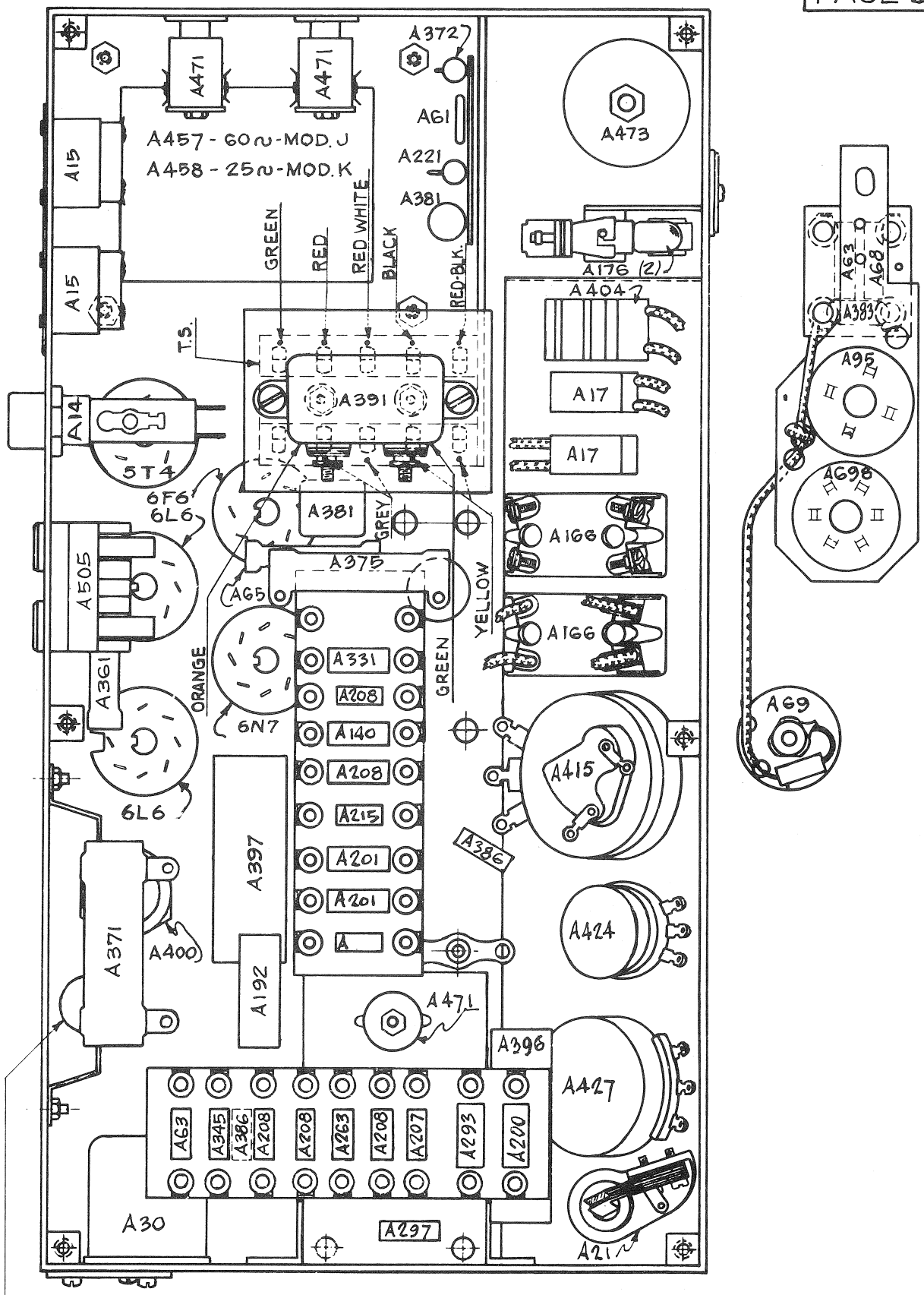

SERVICE DATA	
BOTTOM VIEW OF AMPLIFIER	
FILMOSOUND	
DESIGN 120	MODEL J & K
FOR USE ONLY WITH PART NO. 02936	DATE 2-21-38 REV. 10-22-45

SUPERSEDES MODEL G

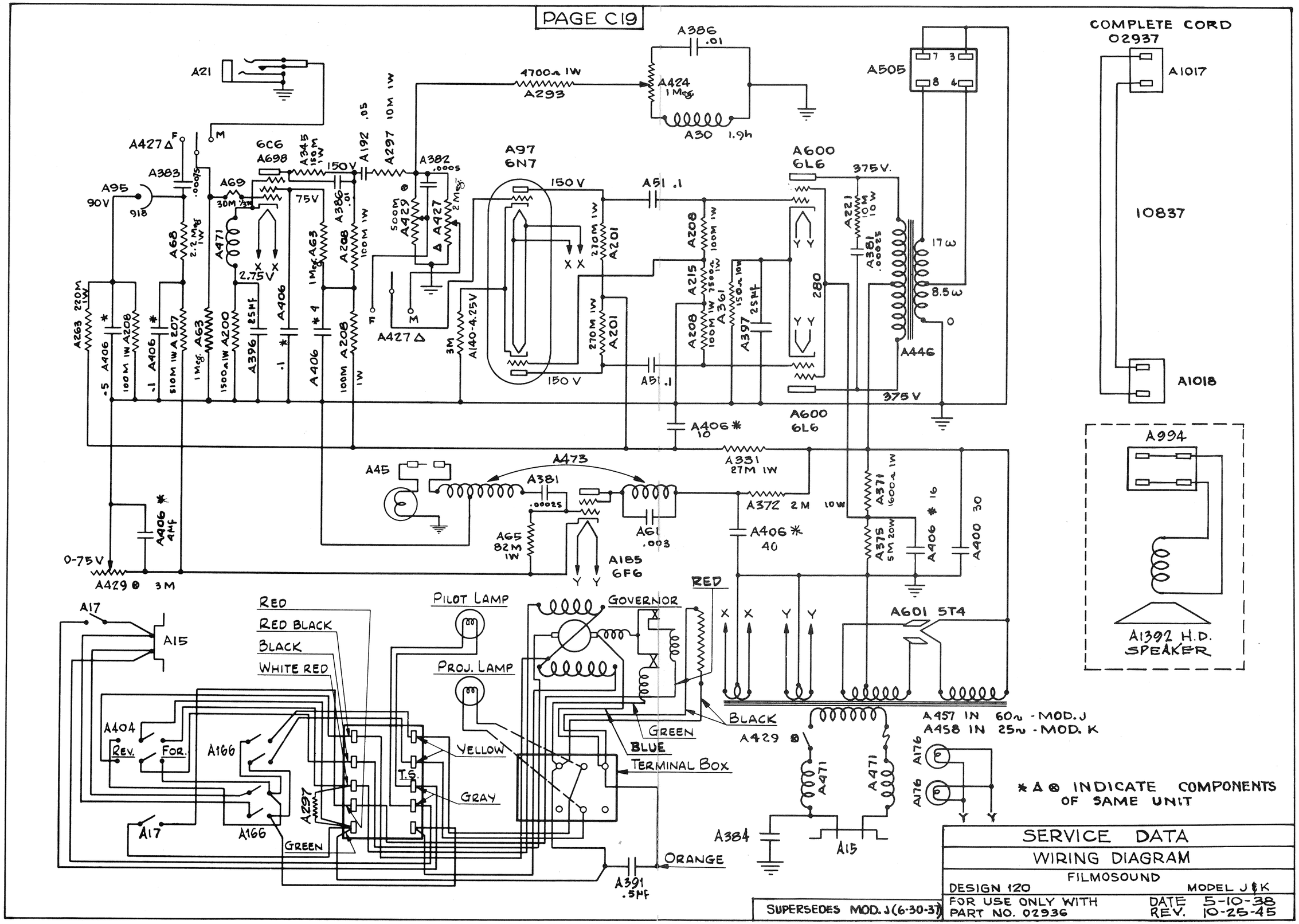
PAGE C19
COMPLETE CORD
02937
A1017
10837
A1018
A994
A1392 H.D.
SPEAKER
A21
A427 Δ
A383
A95
90V
918
A68
2.2 Meg
A69
30M
6C6
A698
A345
150M
150V
75V
A471
2.75V
A63
1 Meg
A200
1500Ω 1W
A396
25MF
A406
A208
100M 1W
A192
.05
A297
10M 1W
A382
.0005
500M
A429
A427
2 Meg
A386
.01
4700Ω 1W
A293
A424
1 Meg
A30
1.9h
A97
6N7
150V
A51
.1
A208
270M 1W
A201
A215
7500Ω 1W
A361
150Ω 10W
A397
25MF
A140-4.25V
3M
A600
6L6
375V.
A221
10M
A381
.00025
17Ω
8.5Ω
0
A446
280
A505
A406 *
10
A331
27M 1W
A45
A473
A381
.00025
A372
2M
10W
A371
1600Ω 1W
A375
5M 20W
A406 *
16
A400
30
A406 *
40
A65
82M
1W
A61
.003
A185
6GF6
A406 *
4MF
0-75V
A429 ⊗
3M
A17
A15
RED
RED BLACK
BLACK
WHITE RED
PILOT LAMP
PROJ. LAMP
GOVERNOR
RED
A601 5T4
BLACK
GREEN
BLUE
TERMINAL BOX
YELLOW
GRAY
ORANGE
A404
REV.
FOR.
A166
T.S.
A297
GREEN
A391
.5MF
A384
A471
A429 ⊗
A15
A176
A457 IN 60~ - MOD. J
A458 IN 25~ - MOD. K
* Δ ⊗ INDICATE COMPONENTS
OF SAME UNIT
SERVICE DATA
WIRING DIAGRAM
FILMOSOUND
DESIGN 120
MODEL J & K
FOR USE ONLY WITH
PART NO. 02936
DATE 5-10-38
REV. 10-25-45
SUPERSEDES MOD. J (6-30-37)

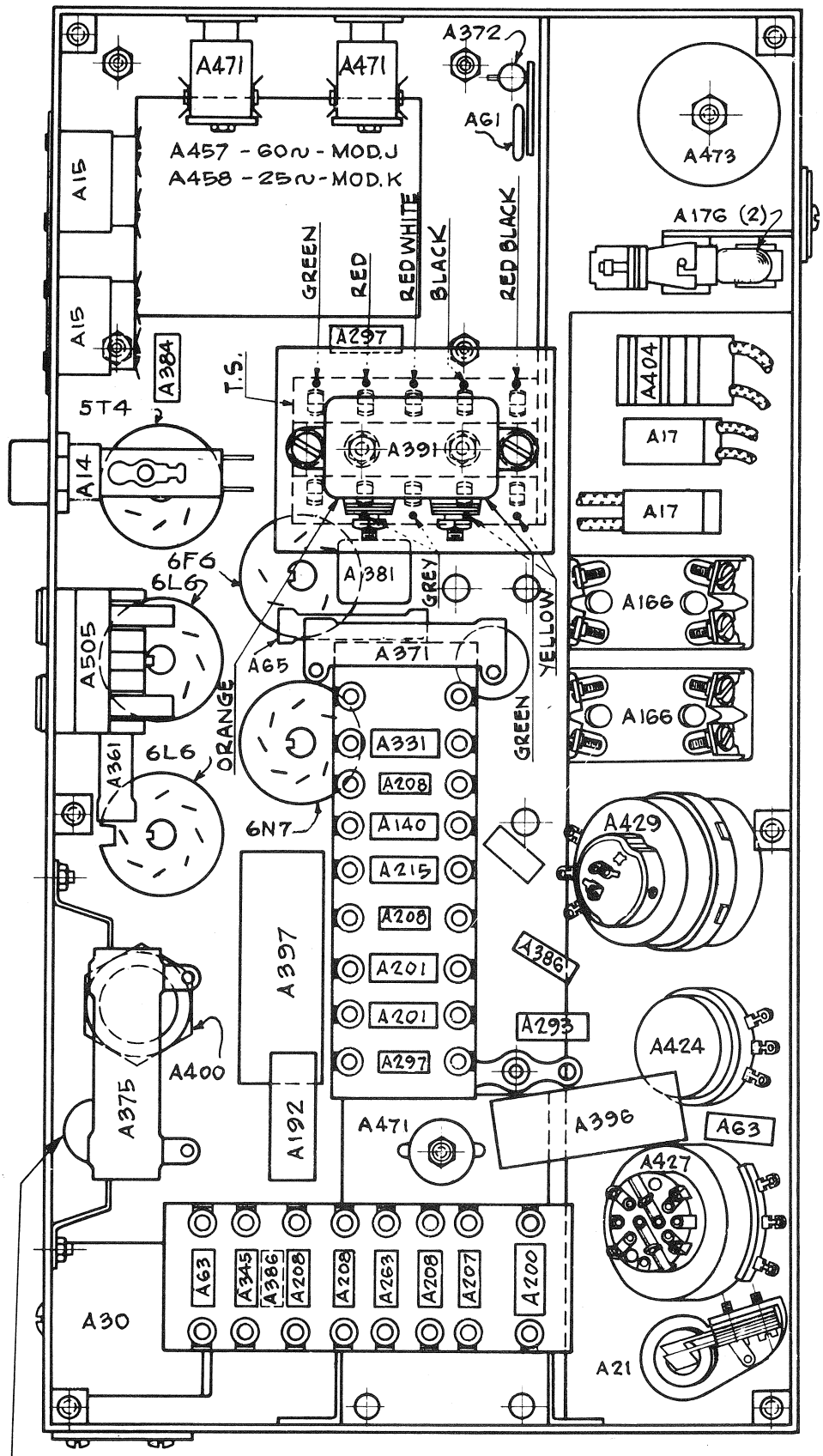

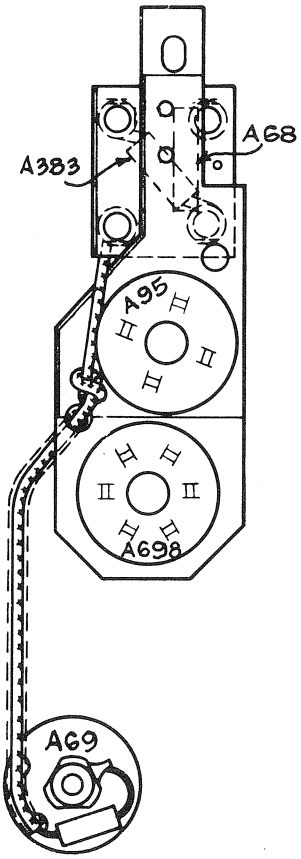

SERVICE DATA	
BOTTOM VIEW OF AMPLIFIER	
FILMOSOUND	
DESIGN 120	MODELS J,K
FOR USE ONLY WITH PART NO. 02936	DATE 5-5-38 REV. 10-23-45

SUPERSEDES MOD J 2-21-38

SECTION D

DESIGN 130, MODEL C

GENERAL INFORMATION.

This is the 1000- or 1200-watt lamp Filmosound, with amplifier separate from the projector. The phototube and exciter lamp are connected to the amplifier through cables. A rather elaborate switching arrangement is used on the amplifier, so study the instruction book until you are familiar with it. Try all the switches to understand their actions. When the amplifier line switch is in any "on" position, a resistance is in series with the transformer primary for "stand by" purposes. It is necessary to have the projector switch in the "on" position, which corresponds to the change-over lever position, in order to apply full voltage to the amplifier.

Note that the first 6C6 tube is connected as a pentode, the second as a triode, the 42 tube as a triode driver, and the 45 tubes as push-pull parallel output. The bias for the 42 and 45 tubes is obtained from the drop in resistor A362, which is in the negative return of the "B" supply. Three chokes are provided for filtering, as well as several condensers.

FILM VOLUME.

The volume is controlled by a gain control in the grid of the second 6C6 tube. Thus the voltages on the exciter lamp, and phototube are not changed by this control. The control, A413, is an adjustable control that adjusts the voltage on the oscillator as in the volume control of the Design 120, Model E. In this way the phototube voltages and exciter lamp voltages at both ends are set to the proper values. The semi-variable control, A421, gives an additional adjustment on the right phototube voltage so both projectors will give equal volumes.

SPEAKER.

The speaker has its own field supply, provided by an 80 tube, condenser, and power transformer in the speaker case. Voltage is applied through terminals 13 and 14 of the speaker cable. This voltage, approximately 90 volts, is obtained from the power transformer of the amplifier. The voice coil impedance required is 36 ohms. The plate load impedance is 2000 ohms.

MICROPHONE.

This Filmosound uses a double-button carbon microphone with an external microphone transformer. Voltage is provided on the ring contact of the jack. A Western Electric No. 110 or Kellogg No. 191 plug should be used.

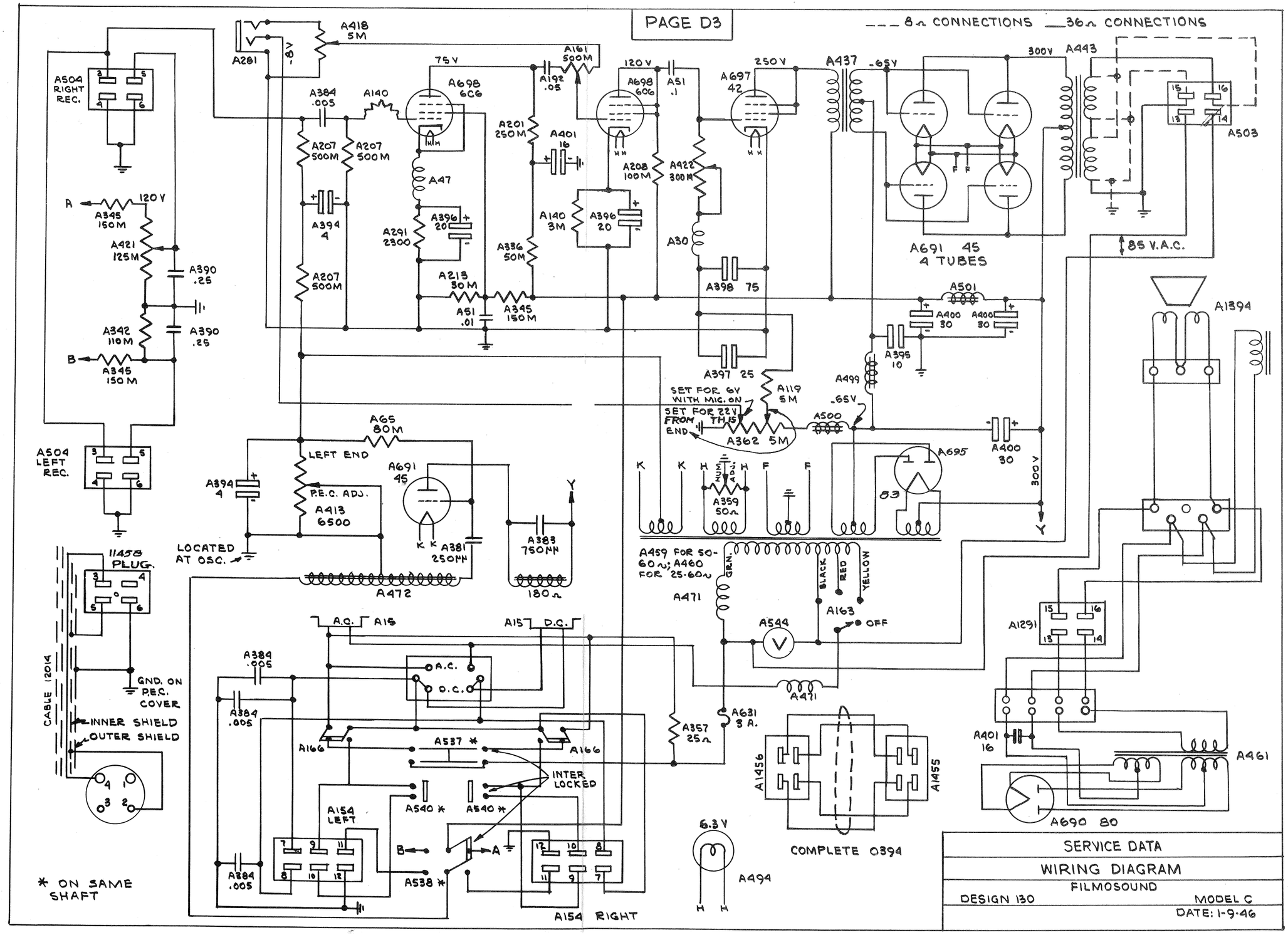
PAGE D3
--- 8Ω CONNECTIONS — 36Ω CONNECTIONS
A504 RIGHT REC.
A504 LEFT REC.
A281
A418 5M
A384 .005
A140
A698 6C6
75V
A161 500M
A192 .05
120V
A51 .1
A697 42
250V
A437
-65V
300V
A443
A503
A207 500M
A207 500M
A207 500M
A394 4
A47
A291 2300
A396 20
A201 250M
A401 16
A140 3M
A396 20
A336 50M
A213 50M
A51 .01
A345 150M
A208 100M
A922 300M
A30
A398 75
A397 25
A119 5M
A691 45
4 TUBES
85 V.A.C.
A501
A400 30
A400 30
A395 10
A499
-65V
A500
A400 30
300V
A1394
R
120V
A345 150M
A421 125M
A390 .25
A342 110M
A390 .25
B
A345 150M
SET FOR 6V WITH MIC. ON
SET FOR 22V FROM END
TH 15
A362 5M
A695
83
A359 50Ω
HUM ADJ.
A65 80M
LEFT END
P.E.C. ADJ.
A413 6500
A691 45
A394 4
LOCATED AT OSC.
A381 250MH
A383 750MH
180Ω
A472
Y
A459 FOR 50-60~; A460 FOR 25-60~
GRN.
BLACK
RED
YELLOW
A471
A163
OFF
A544
A631 3 A.
A357 25Ω
A1291
A401 16
A461
A690 80
11458 PLUG.
CABLE 12014
GND. ON P.E.C. COVER
INNER SHIELD
OUTER SHIELD
A.C.
A15
A15
D.C.
A384 .005
A384 .005
A384 .005
A166
A537 *
A166
INTER LOCKED
A540 *
A540 *
A154 LEFT
A538 *
A154 RIGHT
6.3V
A494
A1456
A1455
COMPLETE 0394
* ON SAME SHAFT
SERVICE DATA
WIRING DIAGRAM
FILMOSOUND
DESIGN 130
MODEL C
DATE: 1-9-46

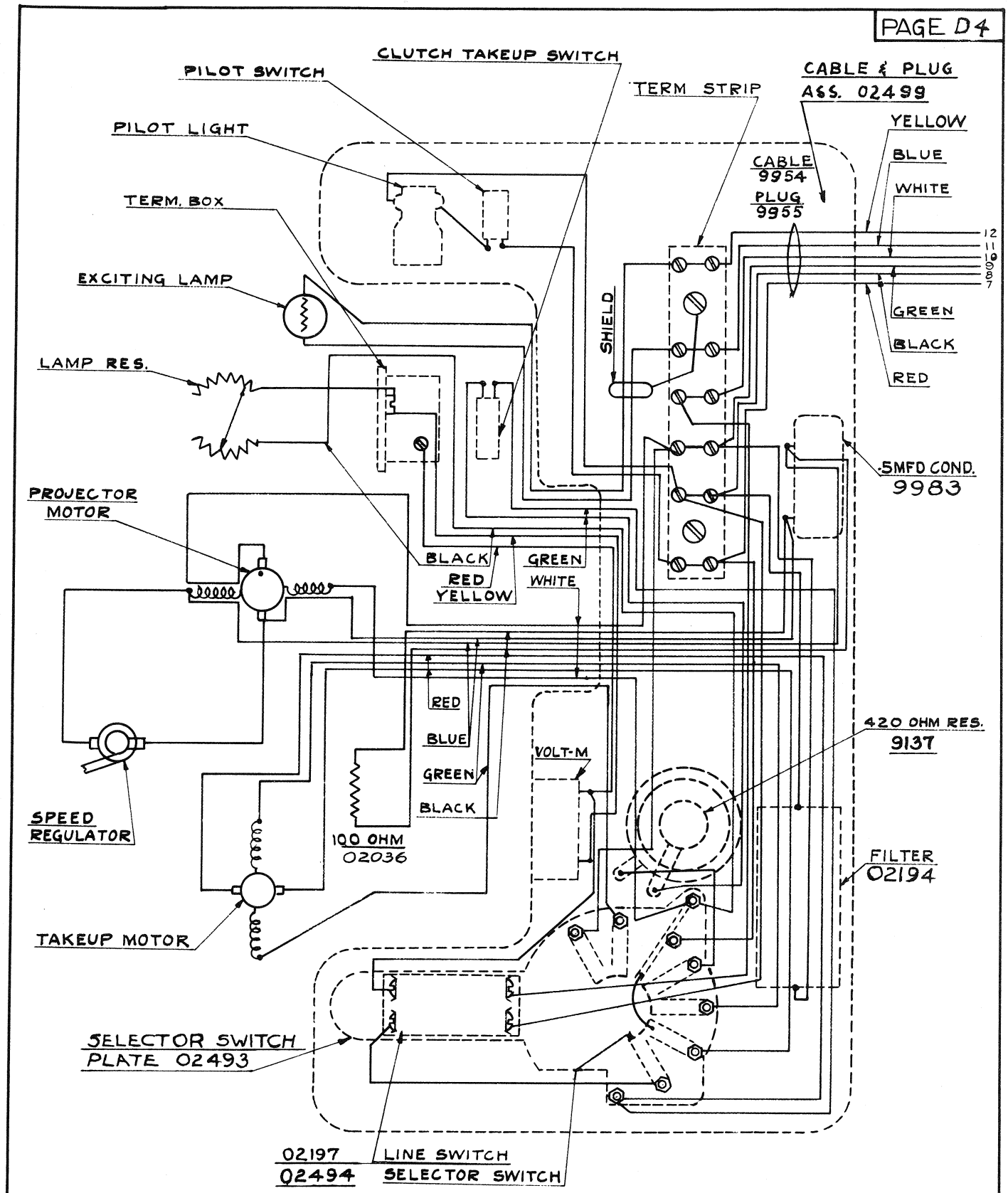

BASE ASSEMBLY SEEN FROM BOTTOM
FOR WIRING

BELL & HOWELL CO CHICAGO U.S.A.	
FILMOSOUND DESIGN 130 MODEL C & D	
SERVICE DATA	DRAWN APVD. 6-29-36

SUPERSEDES MOD. A&B

DESIGN 130, MODEL D, E
(Dual and Single Switch)

GENERAL INFORMATION.

These two amplifiers are similar except for the output transformers. The Design 130, Model D has an electro-dynamic speaker and the Design 130, Model E, has the permanent-magnet type speaker. The amplifiers use four 6L6 tubes in the output and a 6F6 tube as the oscillator.

The single-dual switch when in "single" position changes the output impedance to match one speaker and also cuts a resistance into the output tube screens, thus lowering the output to 25 watts.

See 130-C General Information par. 1

FILM AND MICROPHONE VOLUME.

Film volume is controlled by a 500,000-ohm control in one grid of the 6N7 tube. The semi-variable control on the left end of amplifier controls the oscillator. The setting of this control will determine the maximum output of amplifier. The control on the right end is in the right PEC input voltage circuit and is for balancing both projector outputs.

Microphone volume is controlled by a 500,000-ohm control in the second 6N7 grid.

SPEAKER.

The Design 130, Model D, speaker has a separate field supply, provided by an 80 tube in the speaker case, which is fed through terminals 13 and 14 of the speaker cable. This voltage, approximately 90 volts, is obtained from the power transformer of the amplifier.

TUBES.

When replacing the 6L6 tubes in the amplifier, use the glass type 6L6G tubes but do not intermix with metal tubes.

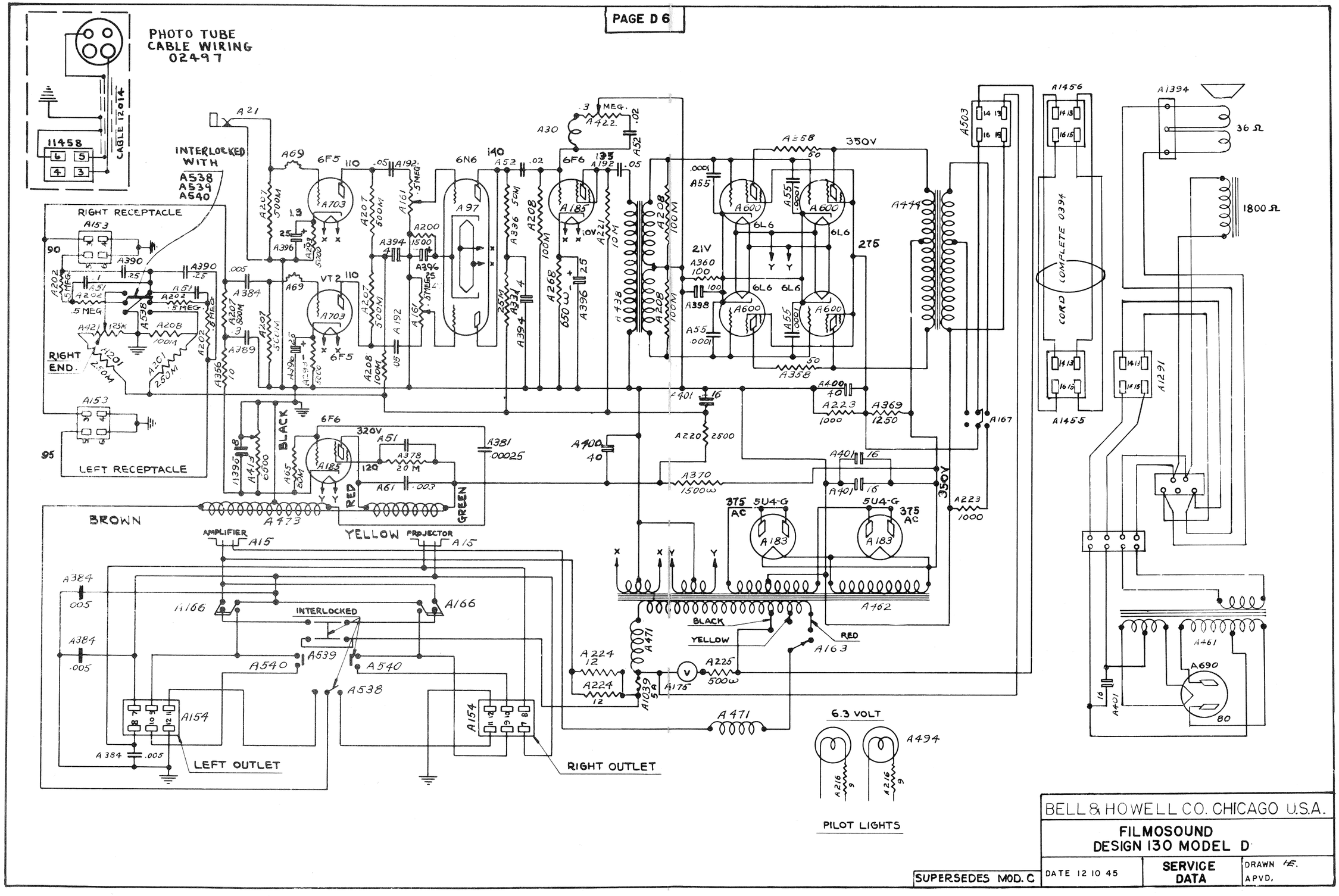

BELL & HOWELL CO. CHICAGO U.S.A.

FILMOSOUND
DESIGN 130 MODEL D

SUPERSEDES MOD. C

DATE 12 10 45

SERVICE DATA

DRAWN H.E.
APVD.

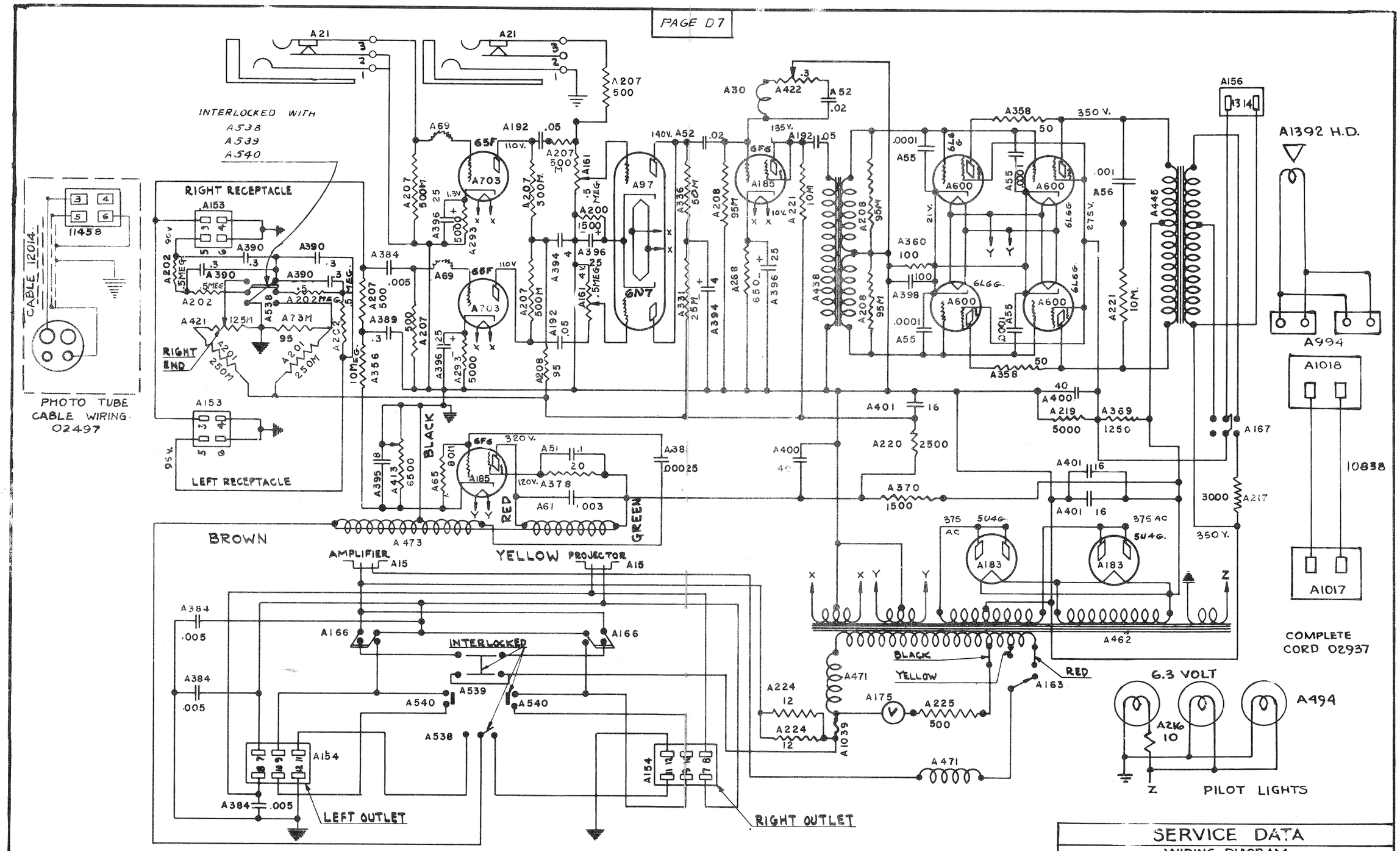

SERVICE DATA	
WIRING DIAGRAM	
FILMOSOUND	
DESIGN 130	MODEL E
FOR USE ONLY WITH PART NO.	DATE 12-21-45 REV.

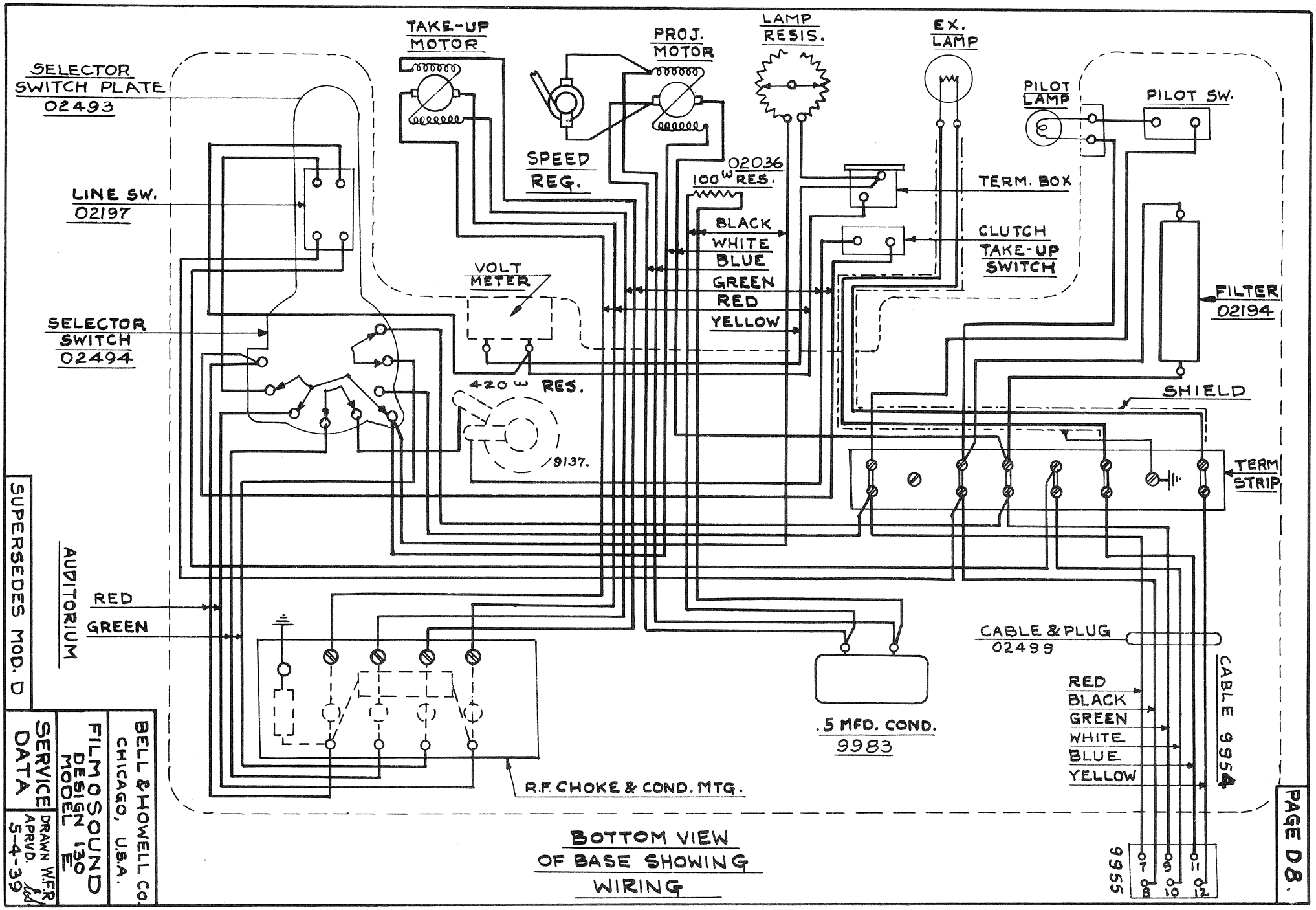

BOTTOM VIEW OF BASE SHOWING WIRING

DESIGN 130 and 140 - AMPLIFIER NO. 03600

GENERAL INFORMATION.

This amplifier differs from other Design 130 types in that all three input tubes as well as the phase inverter have their filaments connected in series and are operated by the current flowing in the output tube cathode circuit.

Frequency characteristics of the amplifier may be altered by means of a tapped control on the rear of the amplifier.

Two microphone inputs are featured, one of which is under separate control. The second is mixed at a fixed level with the photocell input. Control is by the main film volume control.

Two phonograph inputs are provided, neither of which has a volume control. Phonovolume should be controlled by means of the volume control on the phonograph.

The output transformer has a tapped secondary controlled by means of a switch on the rear of amplifier. The permanent-magnet type speaker has an impedance of 16 ohms.

The power output is 25 watts with a single speaker and 50 watts with dual speakers.

See General Information 130-C, par. 1.

DESIGN 130 and 140 - AMPLIFIER NO. 03600

GENERAL INFORMATION.

This amplifier differs from other Design 130 types in that all three input tubes as well as the phase inverter have their filaments connected in series and are operated by the current flowing in the output tube cathode circuit.

Frequency characteristics of the amplifier may be altered by means of a tapped control on the rear of the amplifier.

Two microphone inputs are featured, one of which is under separate control. The second is mixed at a fixed level with the photocell input. Control is by the main film volume control.

Two phonograph inputs are provided, neither of which has a volume control. Phonovolume should be controlled by means of the volume control on the phonograph.

The output transformer has a tapped secondary controlled by means of a switch on the rear of amplifier. The permanent-magnet type speaker has an impedance of 16 ohms.

The power output is 25 watts with a single speaker and 50 watts with dual speakers.

See General Information 130-C, par. 1.

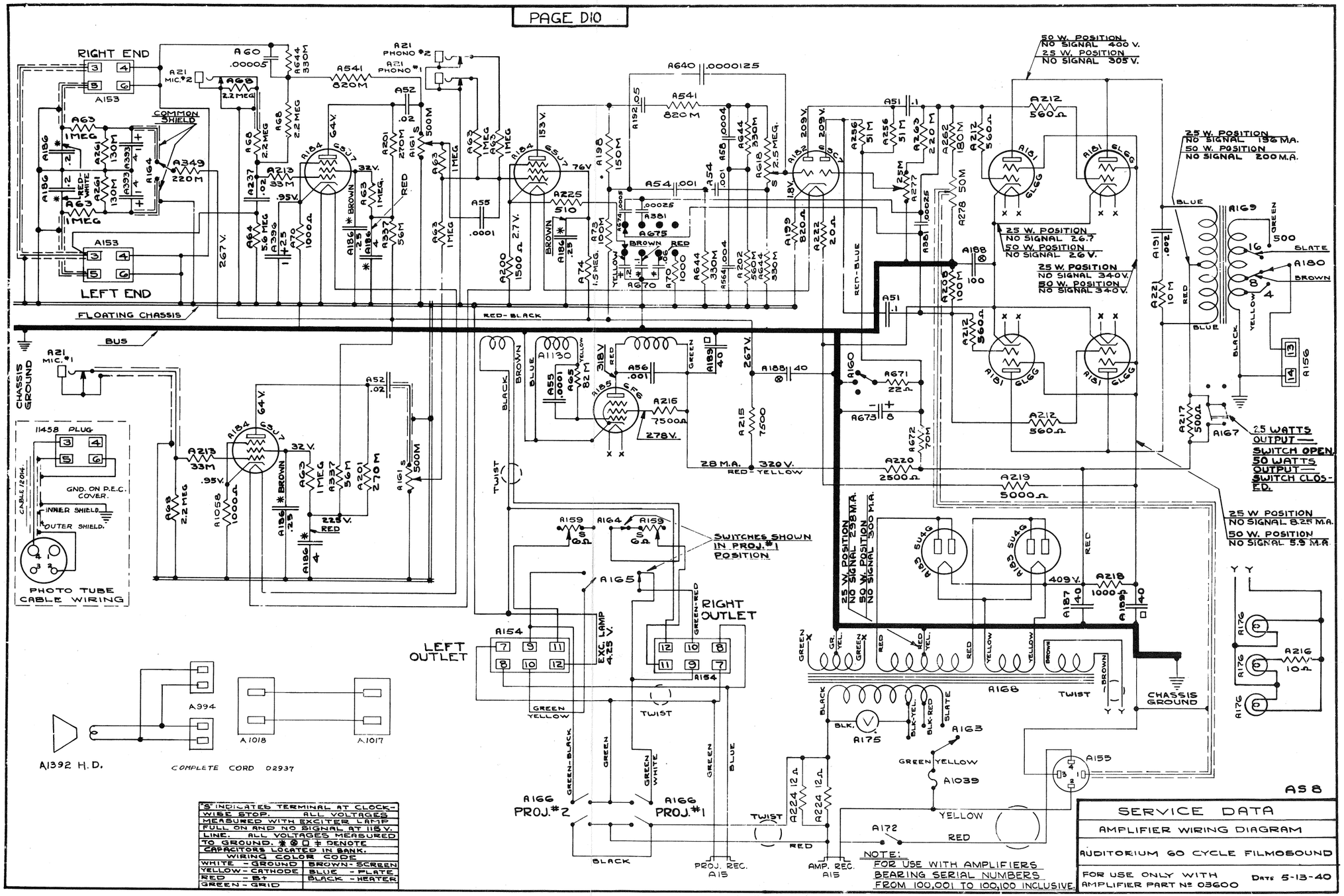

"S" INDICATES TERMINAL AT CLOCKWISE STOP. ALL VOLTAGES MEASURED WITH EXCITER LAMP FULL ON AND NO SIGNAL AT 115 V. LINE. ALL VOLTAGES MEASURED TO GROUND. ✱ ⊗ □ ‡ DENOTE CAPACITORS LOCATED IN BANK.	
WIRING COLOR CODE	
WHITE - GROUND	BROWN - SCREEN
YELLOW - CATHODE	BLUE - PLATE
RED - B+	BLACK - HEATER
GREEN - GRID	

AS 8

SERVICE DATA

AMPLIFIER WIRING DIAGRAM

AUDITORIUM 60 CYCLE FILMOSOUND

FOR USE ONLY WITH AMPLIFIER PART Nº 03600

DATE 5-13-40

SECTION E

DESIGN 138, MODELS A to L, GB, GB2, O AND P

GENERAL INFORMATION.

This amplifier was designed originally to be serviced only at the factory. Therefore, in order to work on it, the rivets in the bottom plate will have to be removed. This is best accomplished by using a hammer and sharp chisel applied to the peened end of the rivet. When reinstalling the plate be sure to place "shakeproof" lock washers between it and the chassis in order to insure a perfect electrical connection.

FILM VOLUME.

Film volume is controlled by single control acting on the photocell and oscillator tube. Failure of the volume to shut off will be due to either resistances A62 and A73 changing value, or to a leaky section of condenser bank A271 connected to this pair of resistors or connected to the junction of resistors A356 and A352. The voltage of this latter point, when measured with a 20,000 ohms per volt, or better, voltmeter, should equal the voltage at junction point of resistors A62 and A73. It should be between 100 and 115 volts.

Low volume and the burning up of resistor A293 will be caused by poor contact of terminal #6 of the speaker cord receptacle A506. When it is known that the speaker is not of the booster type, we recommend that pin No. 1 be broken off the speaker cord plug and inserted in the No. 1 opening of the receptacle. A bit of Dupont household or General Electric glyptol cement will hold it in place. This will prevent the plug from being inserted improperly in the amplifier.

The power output of each of these models is 3.5 watts.

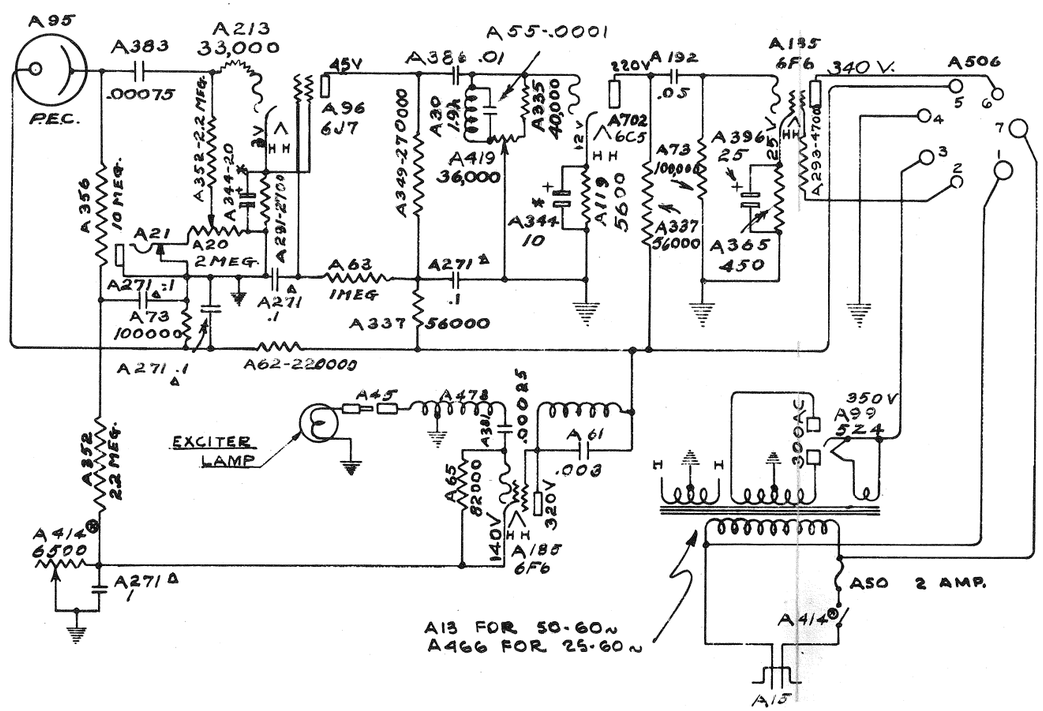

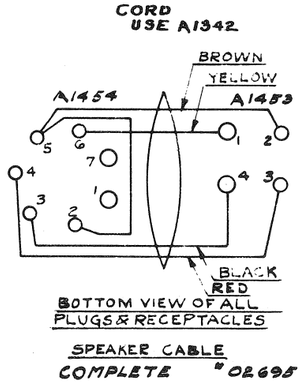

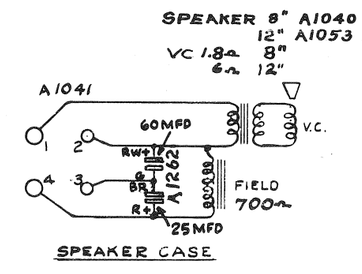

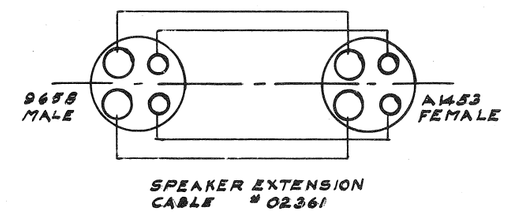

NOTE: ⊗, ✱, △ DENOTE COMPONENTS OF SAME UNIT

	BELL & HOWELL CO. CHICAGO U.S.A.		
	FILMOSOUND A-B-C-D-E-F-G-H DESIGN 138 MODELS J-K-L-GB-RB-SB-TB.		
REVISED	12 18 45	SERVICE DATA	drawn. C.J.N. apvd.

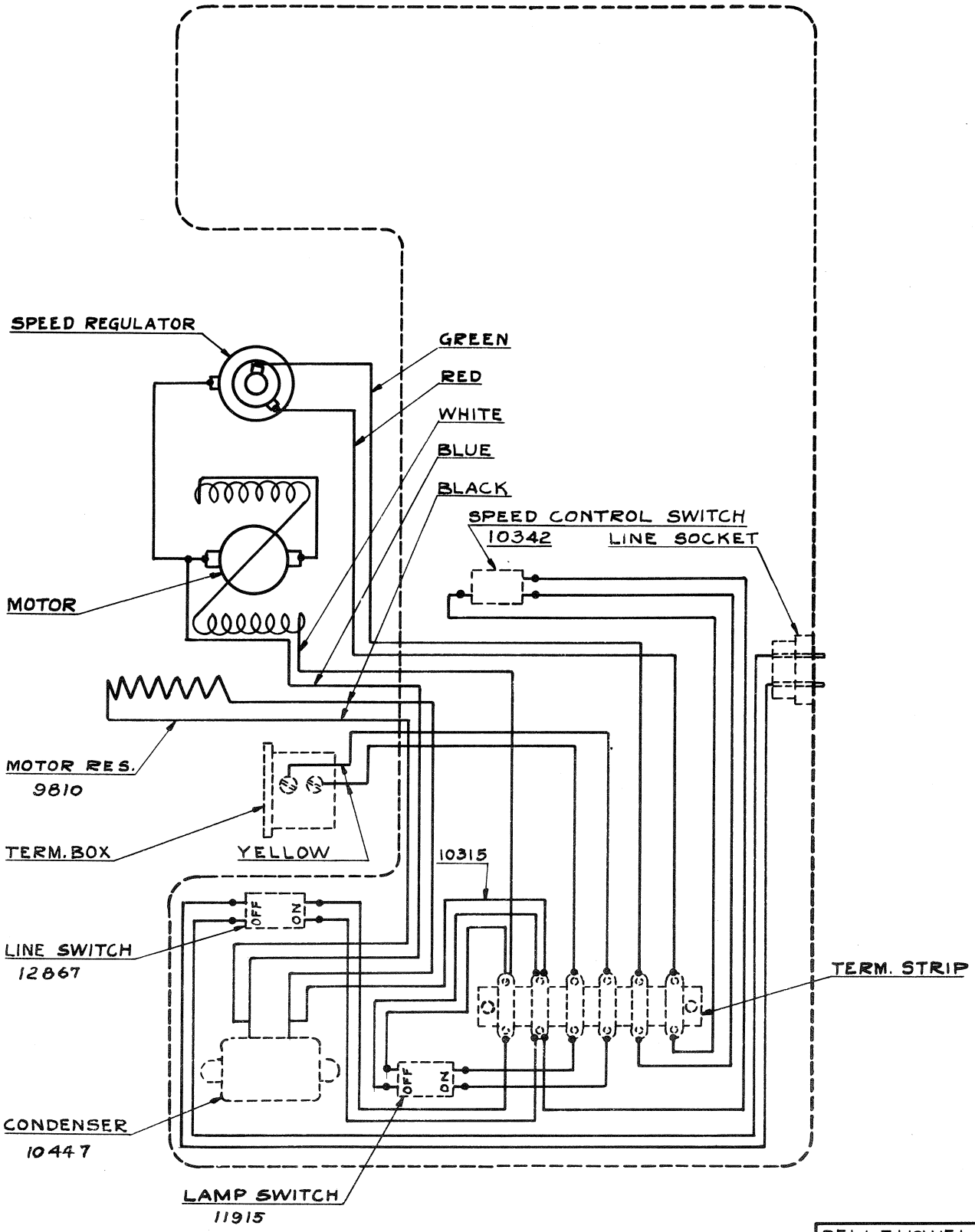

BASE ASSEMBLY SEEN FROM BOTTOM FOR WIRING

BELL & HOWELL CO.
CHICAGO, U.S.A.

FILMOSOUND
DESIGN 138
MODELS A.B.C.E&D

SERVICE DATA

DRAWN
APVD
6-29-36

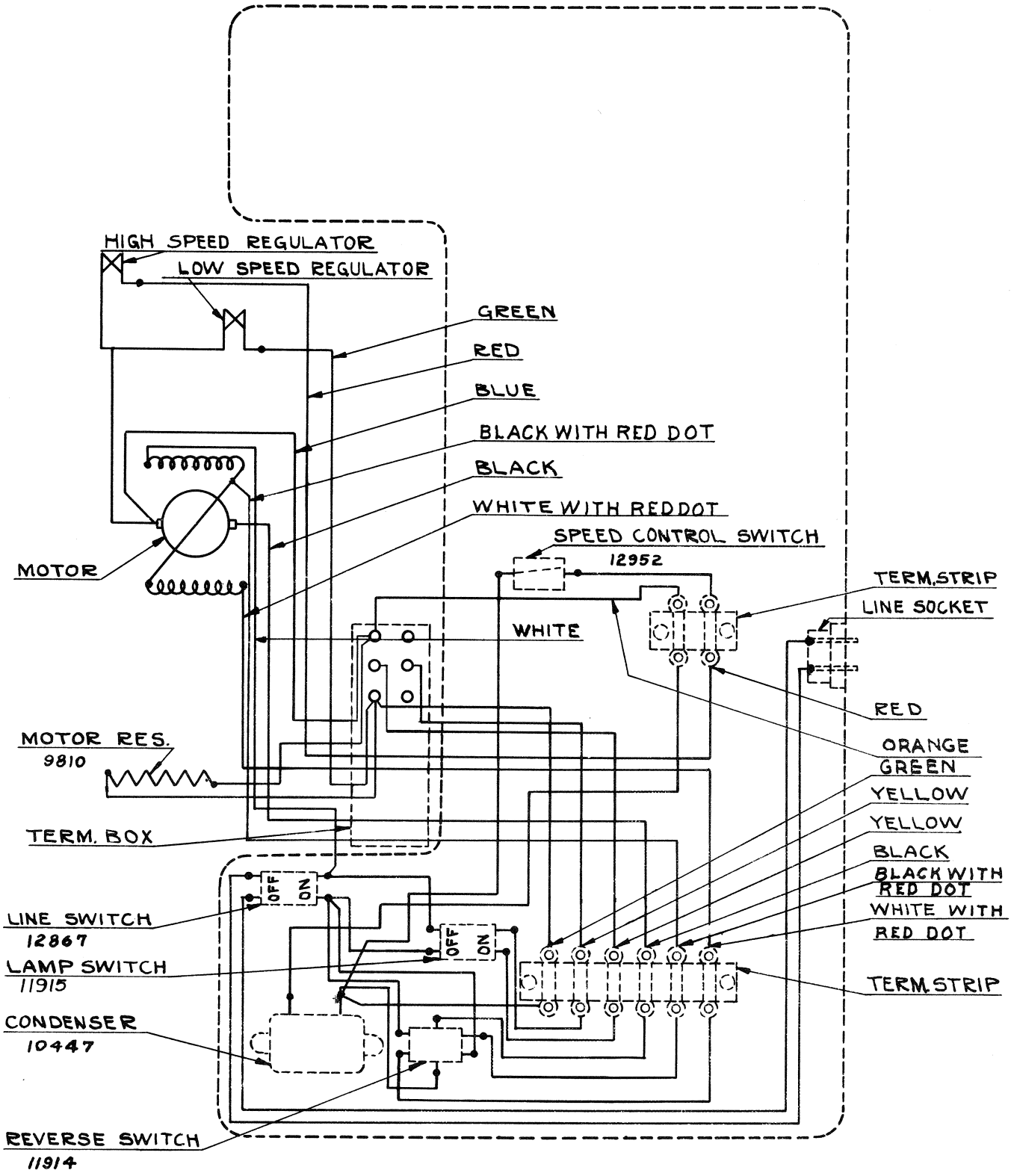

BASE ASSEMBLY SEEN FROM BOTTOM FOR WIRING

BELL & HOWELL CO. CHICAGO, U.S.A.	
FILMOSOUND DESIGN 138 MODELS F-G-J & K	
SERVICE DATA	DRAWN APVD W.S.D. 4-12-37

SUPERSEDES MOD. ABC&D

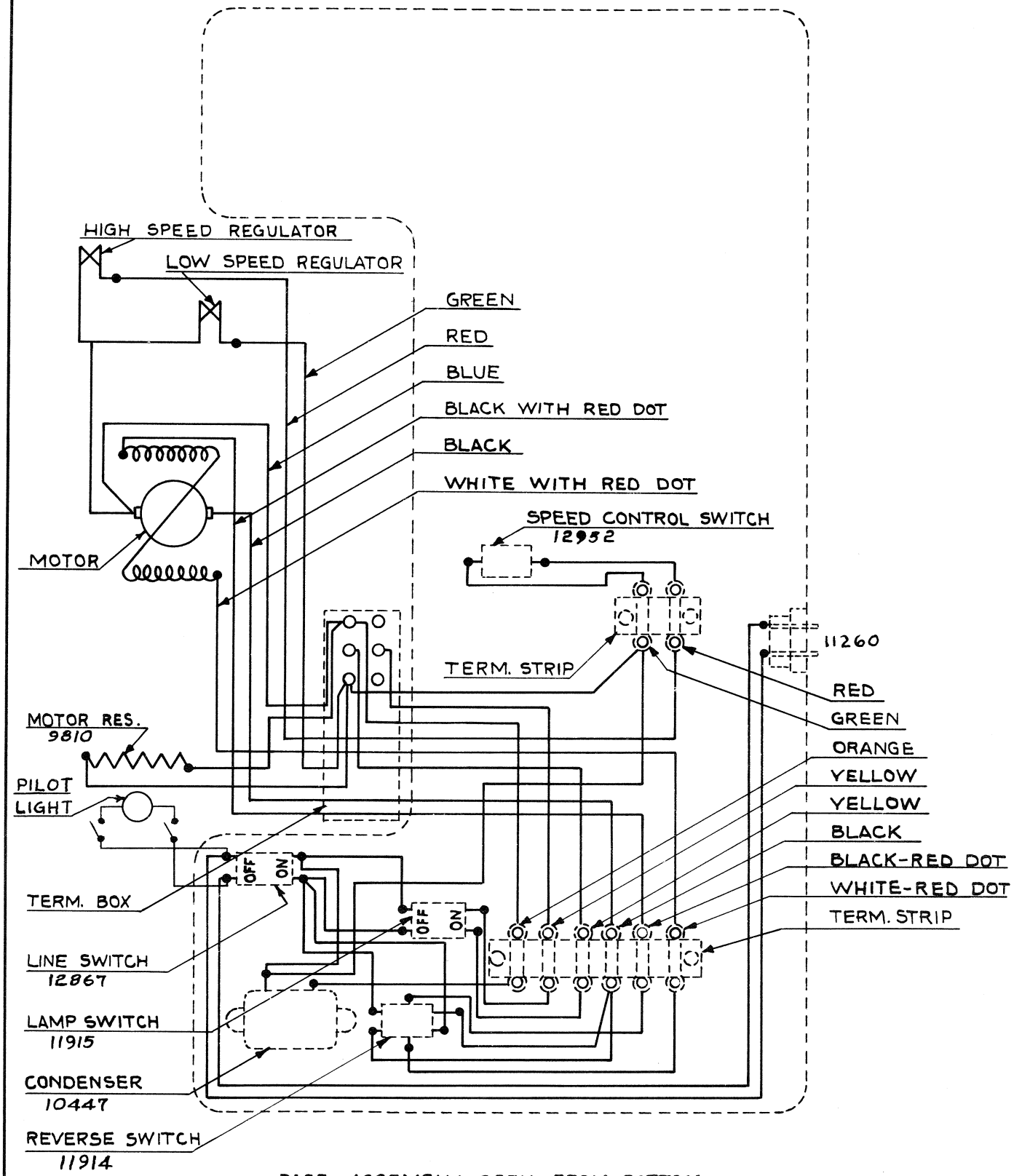

BASE ASSEMBLY SEEN FROM BOTTOM
FOR WIRING

BELL & HOWELL CO.
CHICAGO U.S.A.

FILMO SOUND
DESIGN 138
MODELS-H-L-M2

SERVICE DATA

DRAWN A.S.G.
APRVD. W.S.D.
1-3-38

SUPERSEDES MOD. E

DESIGN 138, BOOSTER AMPLIFIER NO. 02634

GENERAL INFORMATION.

This amplifier was designed for use with the Design 138, Models A to L Filmosound to increase the output. It provides an output stage of two 6F6 tubes in push-pull.

The amplifier is located in the speaker case, and may be exposed by removing the four knurled screws on the back grill of the case. To remove the amplifier for servicing, remove the four screws holding it in the case, and cut off the eyelets holding the bottom cover plate.

The special speaker cable furnished with the booster amplifier connects the 6F6 tube in the Design 138 amplifier as a triode, and supplies 110 volts A.C. to the power transformer in the booster. Note that condensers A401, A501, A366, and A401 supply the filtering for the Design 138 amplifier, as they replace the speaker field and the condenser pack in the regular Design 138 speaker case. Resistors A298 and A333 provide a stabilizing action and keep the volume down, to reduce extraneous noises. The addition of the booster amplifier adds another stage of amplification so the hum, hiss, and microphonic noises will be increased. The tone control A420, with shaft extending through the rear grill, allows the hiss to be reduced by attenuating the high frequencies.

SPEAKER.

The speaker used with the booster is identical to that supplied with the Design 120, Models E and F Filmosounds. They have a 6,850-ohm field and 18-ohm voice coil. The tap supplies reduced voltage for the screen grids.

The speaker field is connected directly across the "B" supply of the booster. Condenser A401 provides sufficient filtering for the plate voltage. Remember in servicing that there are voltages from two "B"

supplies, one in the Design 138 amplifier and one in the booster amplifier.

The speaker cord should be very carefully checked for opens within the cord itself.

Voltage readings should be taken with the booster connected to the corresponding amplifier. The power should be on.

Resistance readings should be taken with the power shut off.

All values are approximate.

The power output of this amplifier is 12 watts.

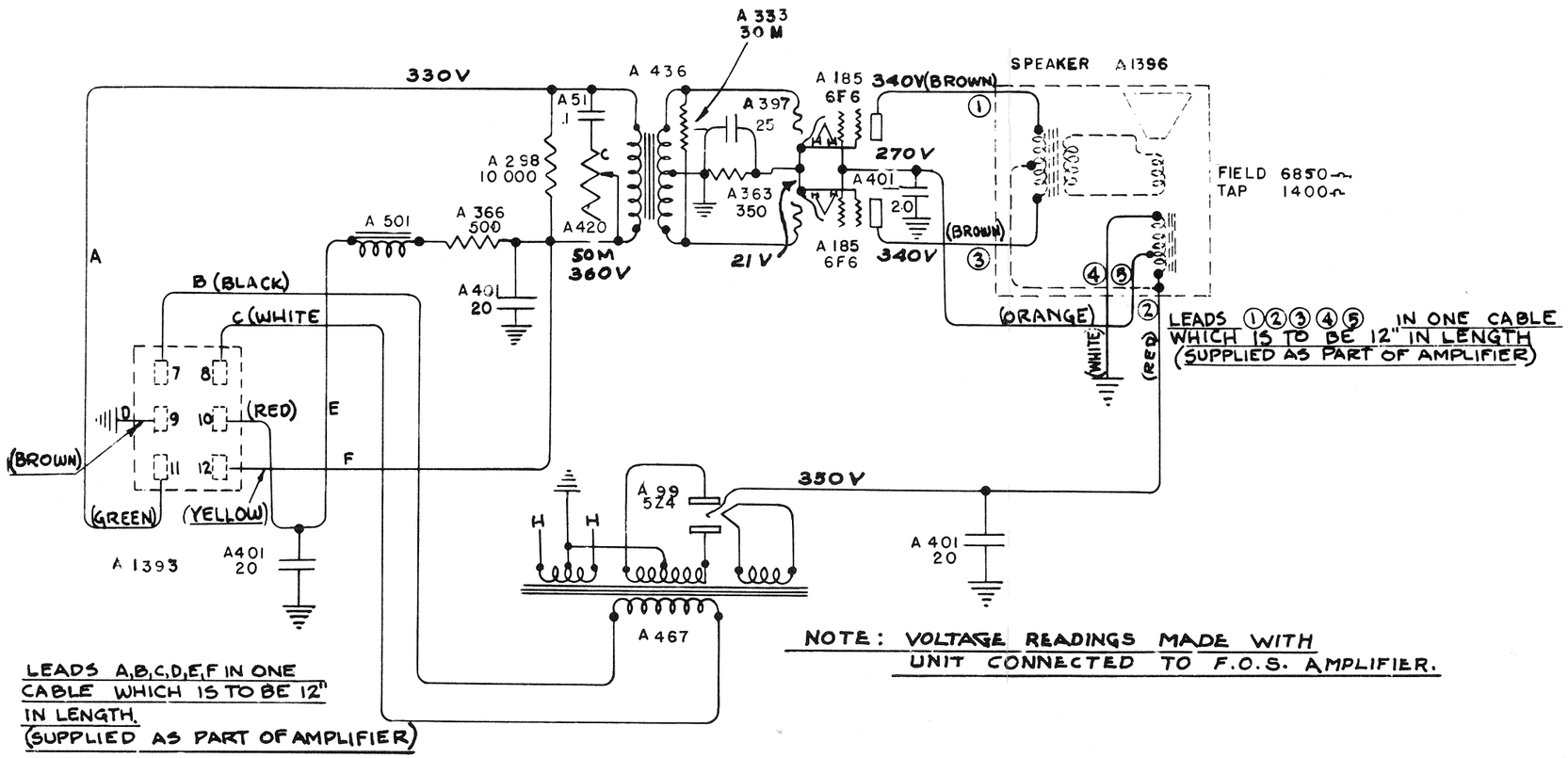

BOOSTER AMPLIFIER SCHEMATIC

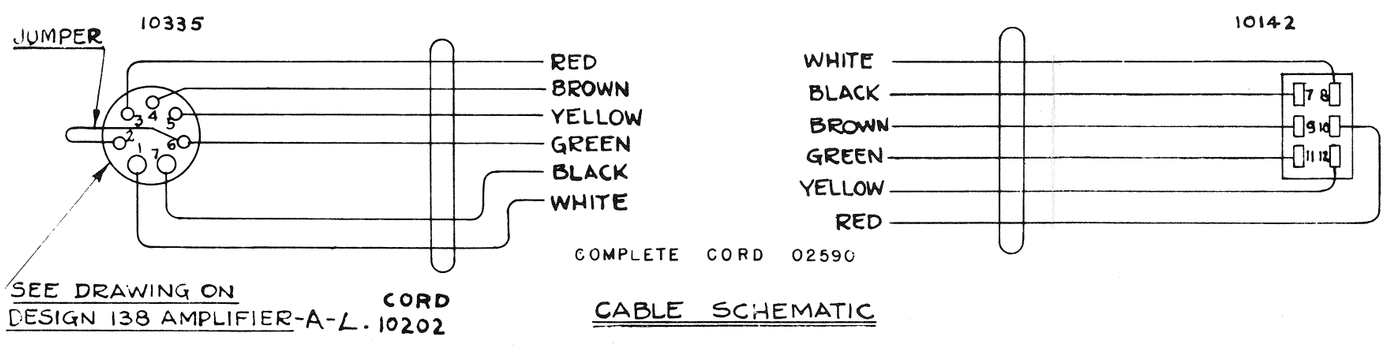

CABLE SCHEMATIC

REVISED 12·19·45

BELL & HOWELL CO. CHICAGO USA		
02634 BOOSTER AMPLIFIER FOR DESIGN 138 FILMOSOUND		
12 19 45	SERVICE DATA	drawn. C.J.N. apvd.

DESIGN 138, MODELS M, M-2, and MA

GENERAL INFORMATION.

The amplifier for the 138-M series of Filmosounds uses a 6L6 tube in the output and a 6F6 tube as the oscillator.

The voice coil impedance required is 1.8 ohms. The required plate load impedance is 4000 ohms. The power output is 8 watts.

The 6L6 tube operates on semi-fixed bias and, if distortion is noticed, the resistance A374 in the transformer high-voltage center tap circuit should be checked.

112 V. LINE
(2000 ω PER VOLT VOLTMETER READING)

"0" VOL. ON
55V. VOL. OFF

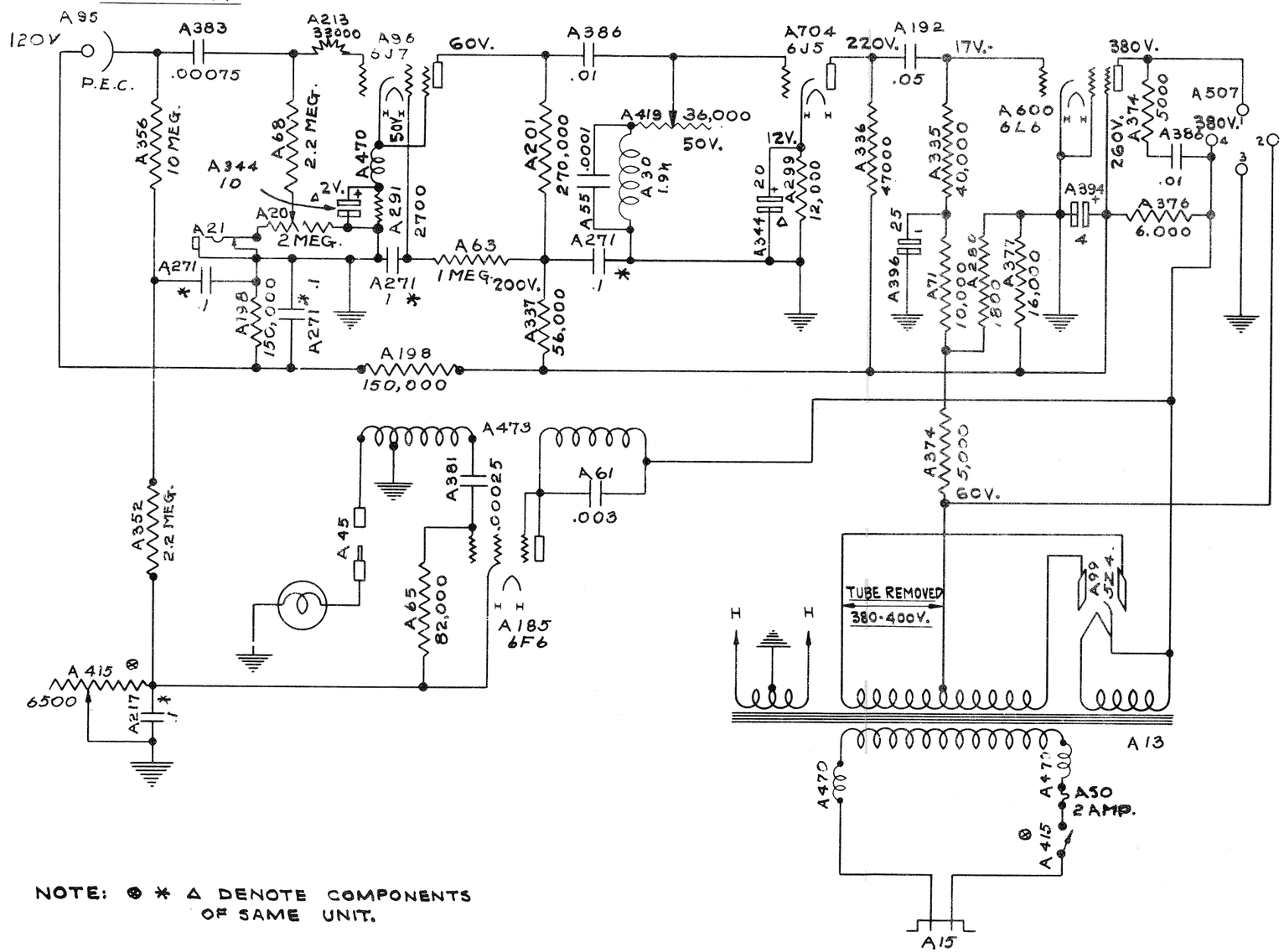

NOTE: ⊗ * Δ DENOTE COMPONENTS OF SAME UNIT.

EXTENSION CORD

CORD COMPLETE 03076

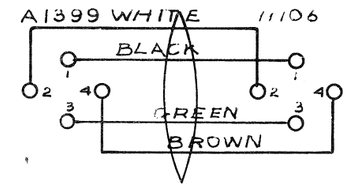

CORD COMPLETE 02992

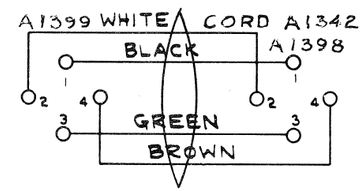

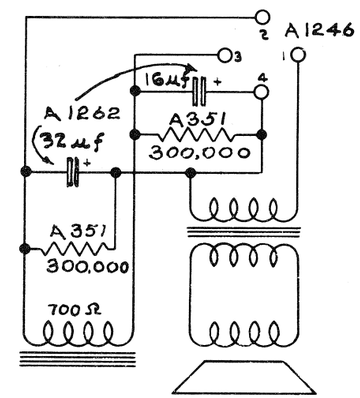

A1215 - 12" SPEAKER 6 Ω
A1096 8" SPEAKER 1.8 Ω

BELL & HOWELL CO. CHICAGO USA		
FILMOSOUND M, MA DESIGN 138 MODELS		
REVISED 12 20 45		
SUPERSEDES MOD. A B C E F H J L	12·20·45	SERVICE DATA	DRAWN C.J.N. APVD.

DESIGN 138, UTILITY, COMMERCIAL AND ACADEMY

(Amplifiers No. 03202, 03389, 03401, 03413, 03473, 03634, and 12634)

GENERAL INFORMATION.

The various models of the Utility, Commercial, and Academy Filmosounds are identified by the following method:

Utility	Commercial	Academy
138-R,-U,-X	138-S,-V,-Y	138-T,-W,-Z
Two cases 12" speaker	Single case 8" speaker	Two cases 8" speaker

Several different amplifiers were used in these models. Bell & Howell keeps a very accurate record of the type of amplifier used with every Filmosound serial number. Under no circumstances should they be changed to another type. Amplifiers may be identified by the numbers appearing on the front of the chassis to the left of the control panel or by a small plate attached to the bottom plate of amplifier. When replacing the amplifier bottom plate, place a small amount of Dupont household or General Electric glyptol cement on the screw threads. This will prevent the screws from working loose.

All amplifiers of this series use 6V6 tubes connected in push-pull and deliver 12 watts of undistorted power.

SPEAKER.

While the circuits vary somewhat, speakers are all interchangeable for testing purposes. The relay used in the later ones is only for discharging the filter condensers.

DESIGN 138, AMPLIFIER NO. 03202

GENERAL INFORMATION.

This amplifier uses a 6F6 tube as an oscillator. The speaker is different from the rest of these models, having a 50M, 10-watt resistor, part No. 11324, in the circuit. No relay is used.

Note that inverse feedback is used and that the tone control is in the input circuit of one of the output tubes.

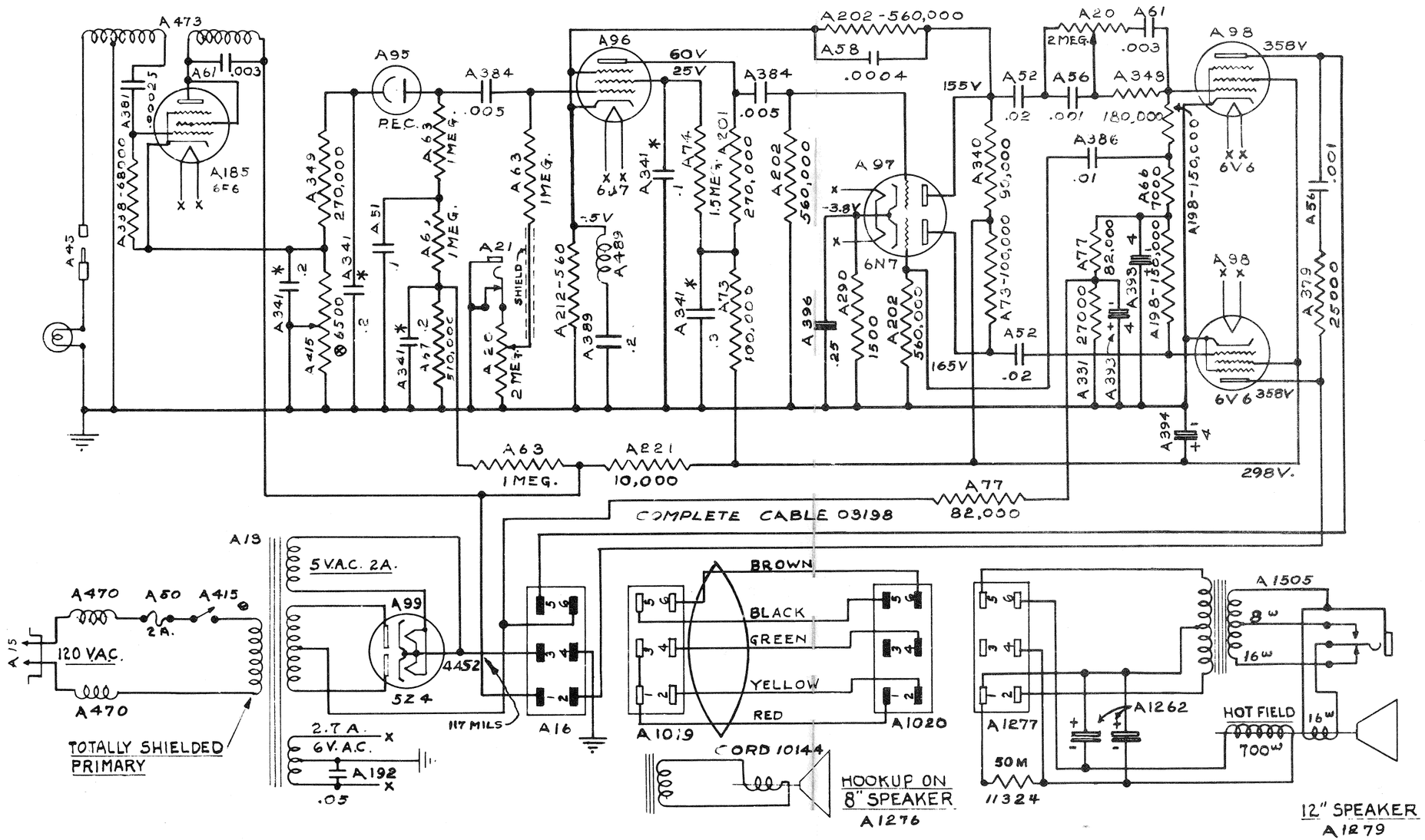

NOTE: * ⊗ DENOTE COMPONENTS OF SAME UNIT.

ALL GROUND LEADS ARE GREEN.
EX. VOLTS MIN. = 1.9 V.
EX. VOLTS MAX. = 4.1 V

BELL & HOWELL CO. CHICAGO U.S.A.		
FILMOSOUND DESIGN 138 MODELS R S T RA SA TA		
12 20 45	SERVICE DATA	DRAWN APVD

SUPERSEDES M&MA 4-12-38 | REVISED 12 21 45

03202. FOR AMPLIFIER WITH SERIAL NOS. FROM 76615 TO 77214 INC

DESIGN 138, AMPLIFIER NO. 03389

GENERAL INFORMATION.

Many of these amplifiers became unstable after being in use for some time. Therefore, the following changes must be made whenever an amplifier wired like the diagram on page E-14 is encountered. A 7,000-10,000-ohm, 1/2-watt resistor should be inserted between the oscillator grid leak condenser combination and the tube grid or oscillator coil lead. The 70M screen resistor should be changed to a 30M, 1/2-watt resistor, A-170, and the bypass condenser should be disconnected and taped. Do not clip the lead at the condenser. Resistors A74 and A67 in the photocell and 6J7 grid circuit should be transposed. When re-installing resistor A-67, mount it with very short leads and place close to the coupling condenser A384. If amplifier is microphonic, move the condenser resistor combination slightly by means of a thin screw driver placed thru one of the bottom plate holes. Install a 50M, 1-watt resistor, A336, across the outside terminals of the photocell section of the volume control. The series feed resistor A349 (275M) should be changed to resistor A1043, 100M, 1/2-watt. The voltage at the junction point of the control and resistor should be between 100 and 120 volts. If the voltage is too high or too low, change the 100M resistor to one of lower or higher value. Do not remove original resistor from terminal strip. Lay new resistor in chassis close to the bottom plate stud, connecting it to the opposite end of original resistor which fed A428. Change microphone control A20.

The majority of these amplifiers have already been changed and are usually marked with a dot of red paint on one of the base plate rivets.

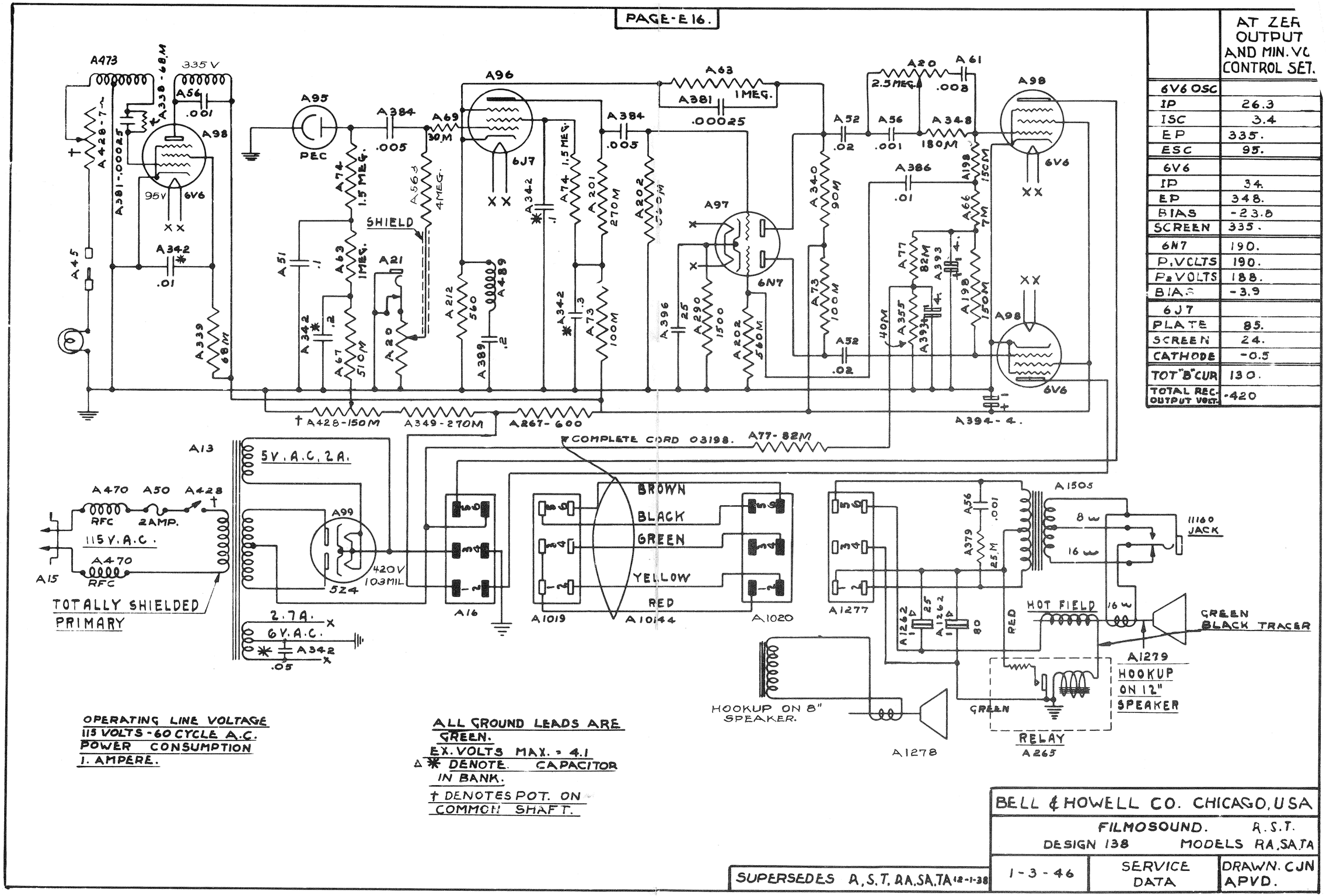

	AT ZER OUTPUT AND MIN. VC CONTROL SET.
6V6 OSC	
IP	26.3
ISC	3.4
EP	335.
ESC	95.
6V6	
IP	34.
EP	348.
BIAS	-23.8
SCREEN	335.
6N7	190.
P.VOLTS	190.
P2VOLTS	188.
BIAS	-3.9
6J7	
PLATE	85.
SCREEN	24.
CATHODE	-0.5
TOT "B" CUR	130.
TOTAL REC. OUTPUT VOLT.	-420

OPERATING LINE VOLTAGE
115 VOLTS - 60 CYCLE A.C.
POWER CONSUMPTION
1. AMPERE.

ALL GROUND LEADS ARE GREEN.
EX. VOLTS MAX. = 4.1
Δ ✱ DENOTE CAPACITOR IN BANK.
† DENOTES POT. ON COMMON SHAFT.

BELL & HOWELL CO. CHICAGO, USA

FILMOSOUND. A.S.T.
DESIGN 138 MODELS RA.SA.TA

SUPERSEDES A.S.T. RA.SA.TA 12-1-38

1-3-46	SERVICE DATA	DRAWN. CJN APVD.

FOR USE WITH AMPLIFIER 03389.

DESIGN 138, AMPLIFIER NO. 03401

GENERAL INFORMATION.

Failure of exciter lamp to operate may be due to shorted turns in oscillator coil. If tubes are known to be good and all voltages are correct then change coil.

When the exciter lamp voltage is excessive, remove the No. A337 screen resistor. Replace it with a 30M resistor No. A170 and disconnect the by-pass condenser lead. Tape up. Do not clip off at condenser bank.

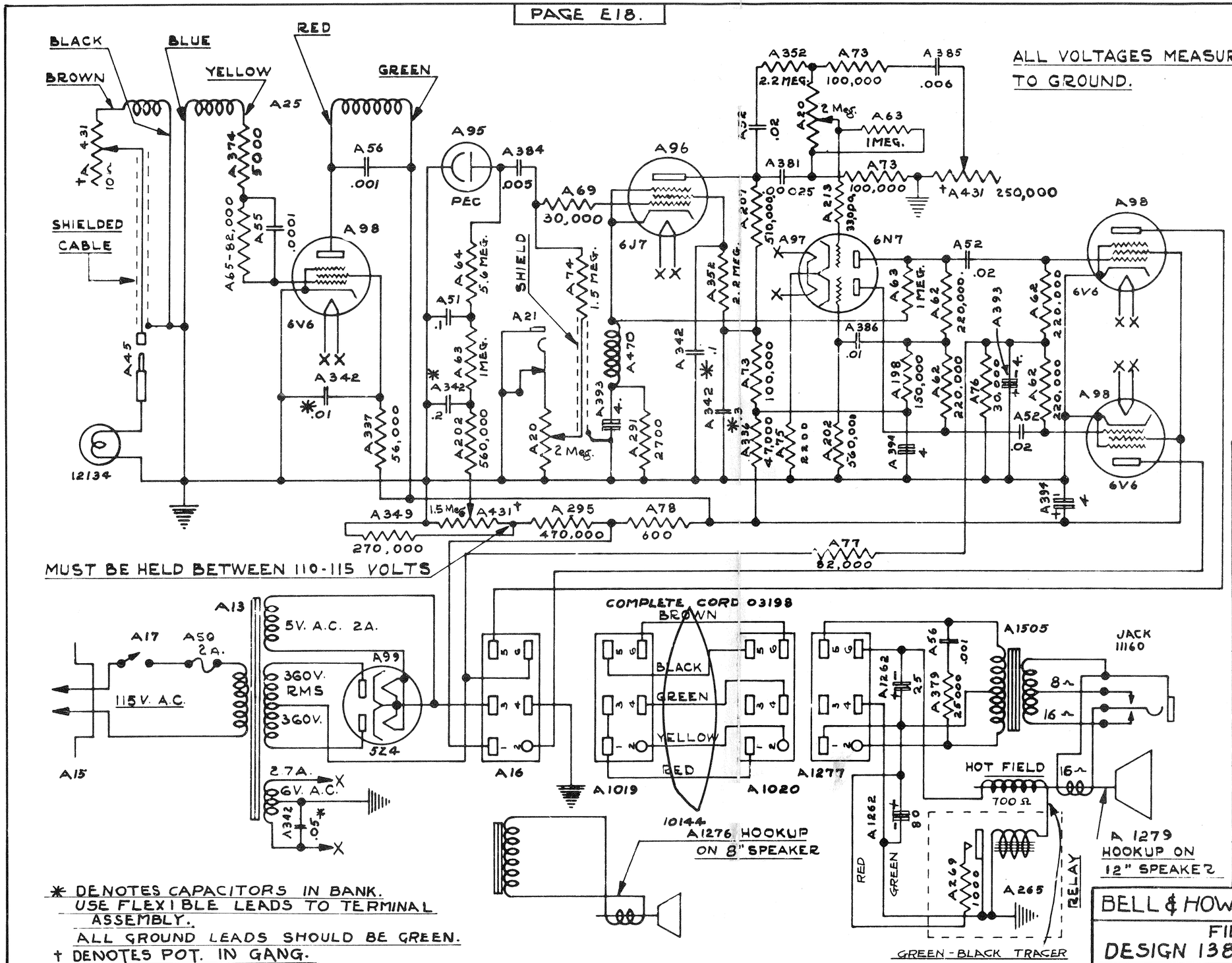

6V6 OSC.	AT ZERO OUTPUT AND MIN. VOL. CON SETTING	AT MAX. UNDISTORTED OUTPUT MAX. VOL. CON SETTING.
IP	30.	
ISC	2.8	
EP	326.	
ESC	140.	
6V4		
IP	36.	32.
EP	338.	328.
BIE	-20.	-23.0
SCREEN	326.	316.
6N7		
P. VOLTS	75.	72.
P_2 VOLTS	76.	72.
BIAS	-2.	1.8
6J7		
PLATE	60.	55.
SCREEN	27.5	24.
CATHODE	-1.0	-1.0
TOTAL "B" CURRENT	110	120
TOTAL REC. OUTPUT VOLT.	425	405

* DENOTES CAPACITORS IN BANK.
USE FLEXIBLE LEADS TO TERMINAL ASSEMBLY.
ALL GROUND LEADS SHOULD BE GREEN.
† DENOTES POT. IN GANG.

BELL & HOWELL CO. CHICAGO, USA.

FILMOSOUND TA.
DESIGN 138 MODELS R,S,T,RA,SA

2-1-46	SERVICE DATA	DRAWN C.J.N. APVD.

FOR USE WITH AMPLIFIER 03401

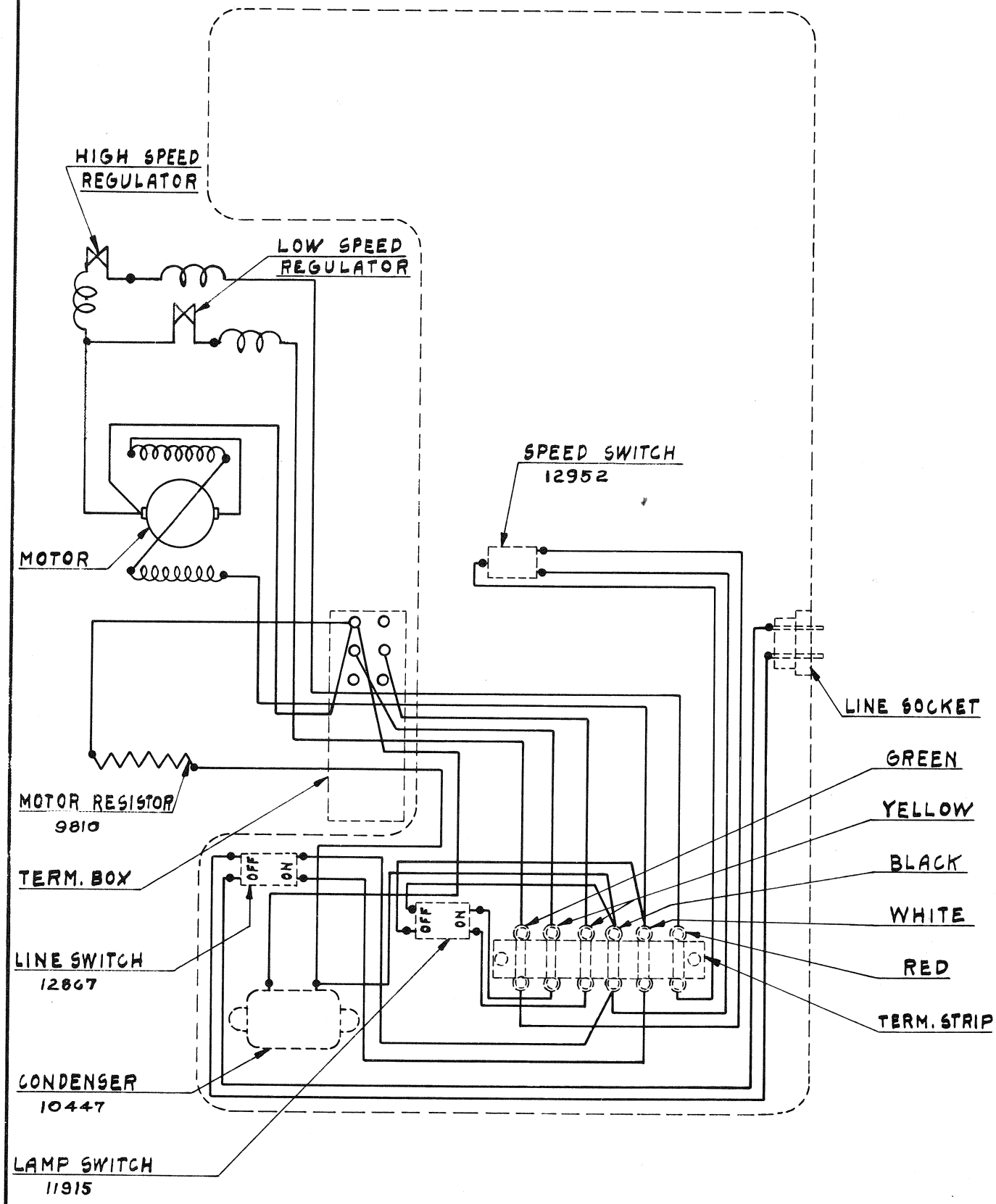

BOTTOM VIEW OF BASE ASSEMBLY
SHOWING WIRING

ACADEMY

BELL & HOWELL CO. CHICAGO U.S.A.	
FILMOSOUND DESIGN 138	
SERVICE DATA	DRAWN F.L. APRD. 10-24-38

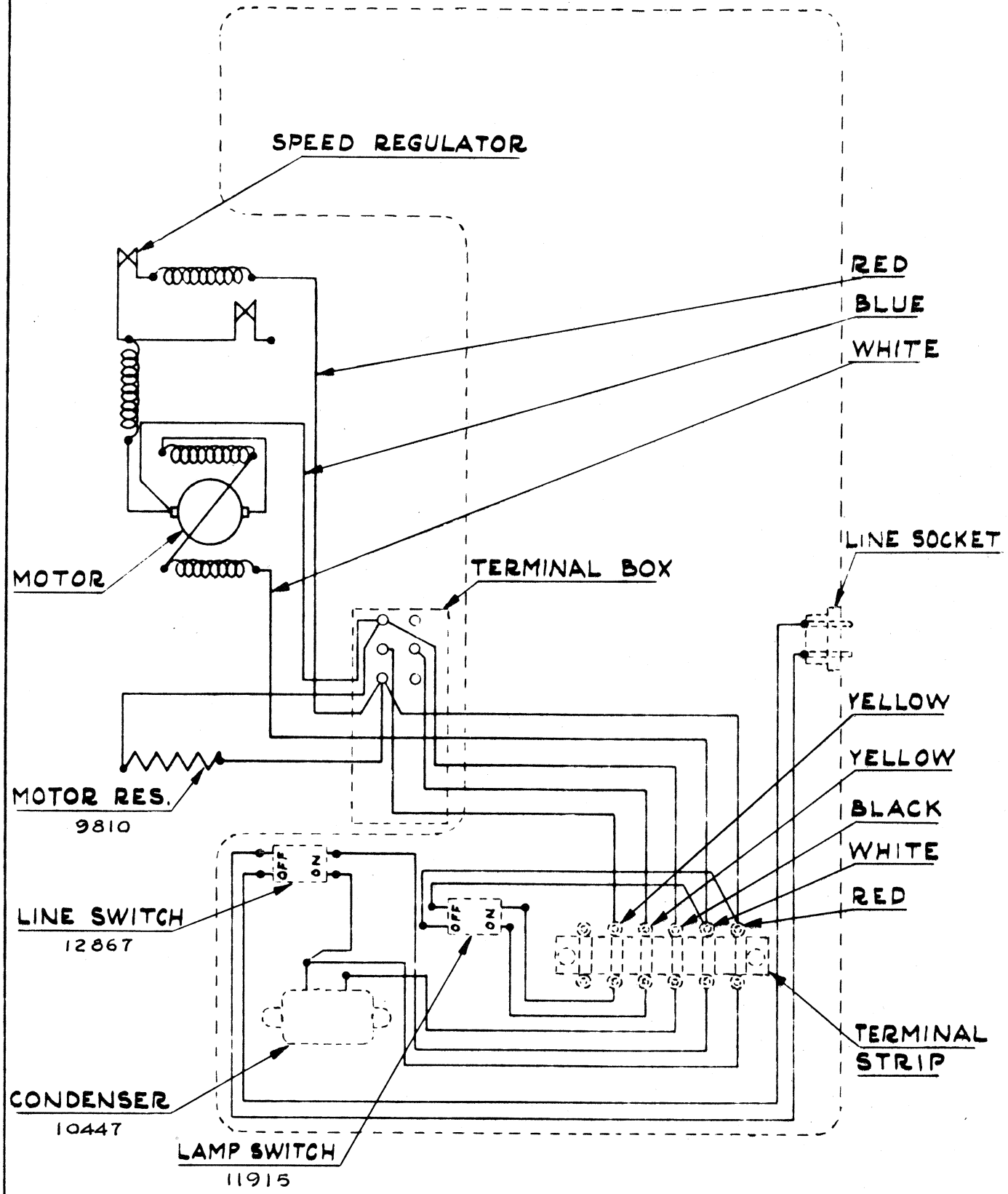

BASE ASSEMBLY SEEN FROM BOTTOM SHOWING WIRING

COMMERCIAL

BELL & HOWELL CO
CHICAGO, ILL.

FILMOSOUND DESIGN 138 MODELS

SERVICE DATA

DRAWN R.O.L.
APV'D
1-19-39

SUPERSEDES MOD'S. S-SA-SB (10-21-38)

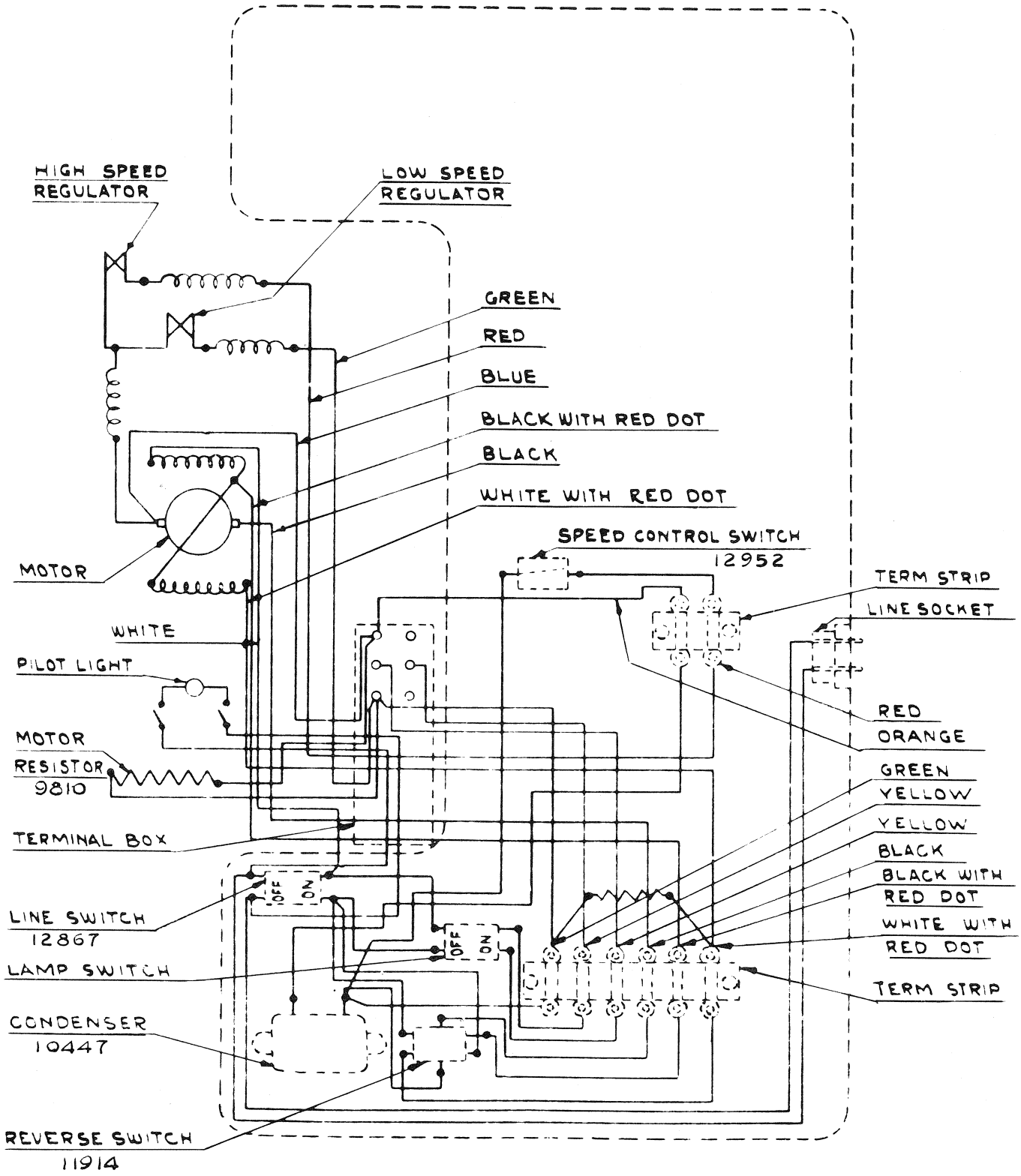

BASE ASSEMBLY SEEN FROM BOTTOM FOR WIRING

UTILITY

BELL & HOWELL CO CHICAGO, U S A	
FILMOSOUND DESIGN 138	
SERVICE DATA	DRAWN ASG APV'D 11-28-34

DESIGN 138, AMPLIFIERS NO. 03413, 03473, 03634, and 12634

GENERAL INFORMATION.

All of the above amplifiers are very much alike, the main difference being in the tone control circuits.

Low volume may be caused by a shorted section in condenser A37 and leaking between sections of condenser A38. The latter will usually become very hot when it is not in satisfactory condition. Fading of volume can also be caused by this condenser.

NOTE

The 03634 and 12634 amplifiers use a 6SC7 phase inverter tube rather than the 6N7 tube. The two tubes are not interchangeable.

Metal 6V6 tubes may be used thruout although a glass 6V6GT tube will usually be found in the oscillator socket. 6V6GT tubes may be used exclusively but it will be necessary to install grounded metal shields on the tubes in the output sockets.

The 03413 amplifier is a 25-cycle amplifier. There are three series of them -- all bearing the same part number. The first series followed the 03401 circuit, the second the 03473 circuit and the third the 12634 circuit. Diagrams of the first two circuits are shown.

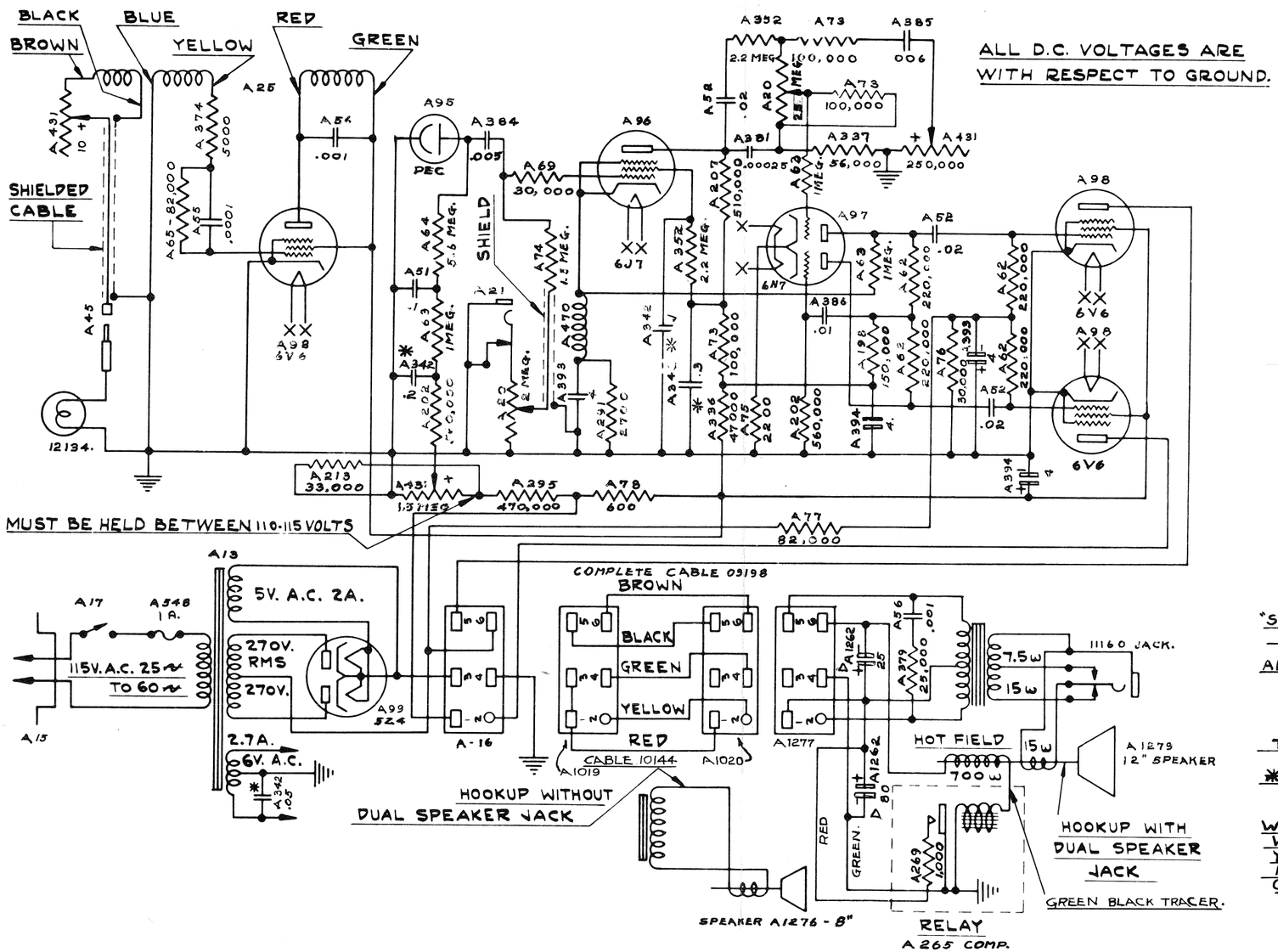

ALL D.C. VOLTAGES ARE WITH RESPECT TO GROUND.

6V6 OSC.	AT ZERO OUTPUT AND MAXIMUM VOLUME CONTROL SETTING
IP	28 MA
ISC	4.5 MA
EP	250 VOLTS
ESC	250 VOLTS
6V6	
IP	28 MA
EP	265 VOLTS
BIAS	-15.6 VOLTS
SCREEN	250 VOLTS
6N7	
P1 VOLTS	70 VOLTS
P2 VOLTS	75 VOLTS
BIAS	1.2 VOLTS
6J7	
PLATE	42 VOLTS
SCREEN	22 VOLTS
CATHODE	-1 VOLT
TOTAL B CURR.	90 MA
TOTAL RECT. OUTPUT VOLTS	330

"S" INDICATES TERMINAL AT CLOCKWISE STOP.

ALL VOLTAGES MEASURED WITH EXCITER LAMP FULL ON AND NO SIGNAL AT 115 V. LINE. ALL VOLTAGES MEASURED TO GROUND.

+ INDICATES CONTROLS ON SAME SHAFT.

✱ △ DENOTE CAPACITORS LOCATED IN BANKS.

WIRING COLOR CODE.

WHITE - GROUND	BROWN - SCREEN
YELLOW - CATHODE	BLUE - PLATE
RED - B+	BLACK - HEATER.
GREEN - GRID	

EX. VOLTS MIN. NO SIGNAL 1.5 VOLTS
EX. VOLTS MAX. NO SIGNAL 4 VOLTS
WITH V.T. METER.

COMMERCIAL
ACADEMY
UTILITY.

BELL & HOWELL CO. CHICAGO U.S.A.

FILMOSOUND
DESIGN 138 MODELS RB SBTB

29-12-45	SERVICE DATA	DRAWN CJN APVD.

FOR USE WITH AMPLIFIER ✱ 03413.

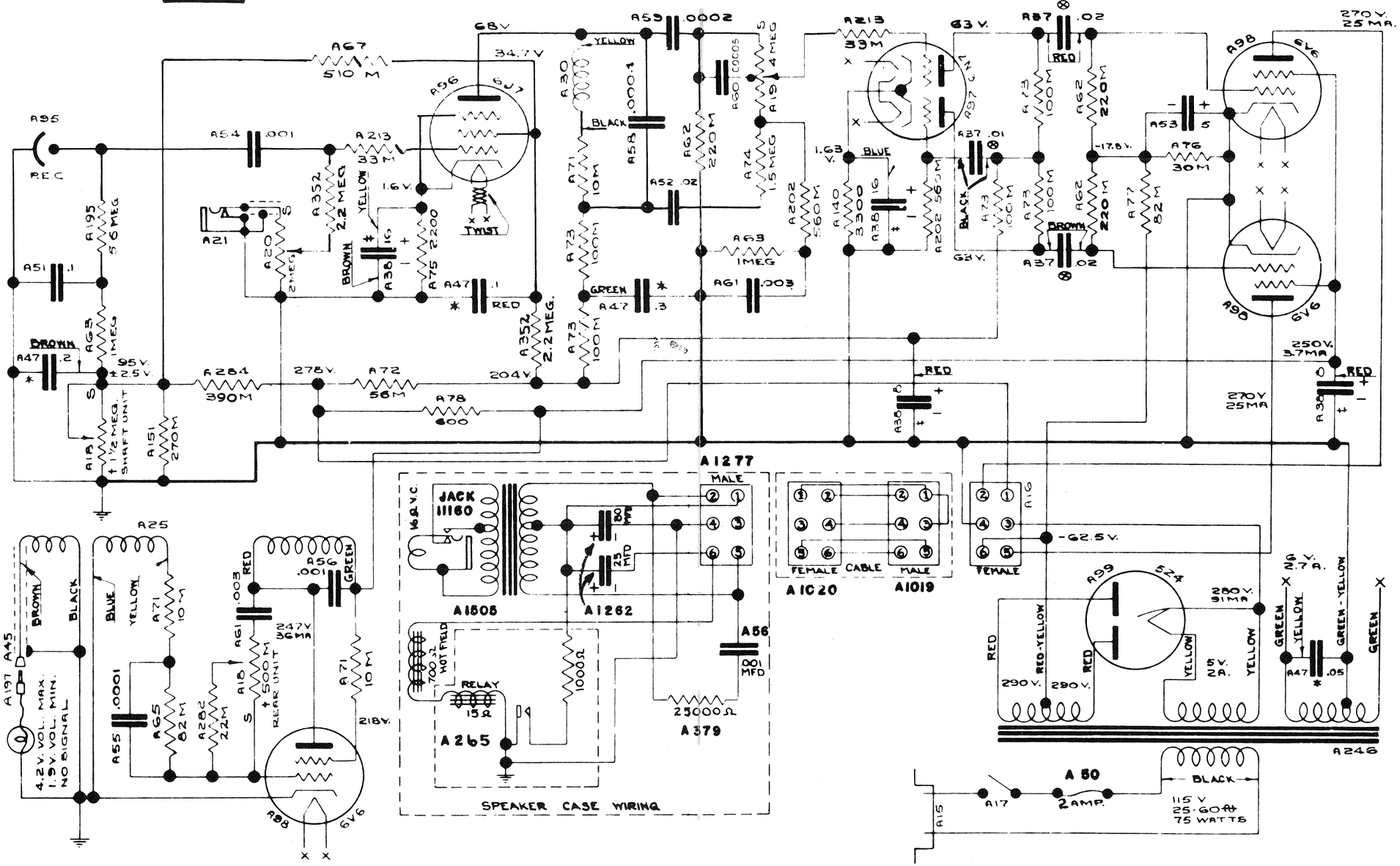

SERVICE DATA
AMPLIFIER WIRING DIAGRAM
COMMERICAL, ACADEMY, & UTILITY 25 CYCLE FILMOSOUND
FOR USE ONLY WITH AMPLIFIER PART NO. 03413 DATE 3-22-40

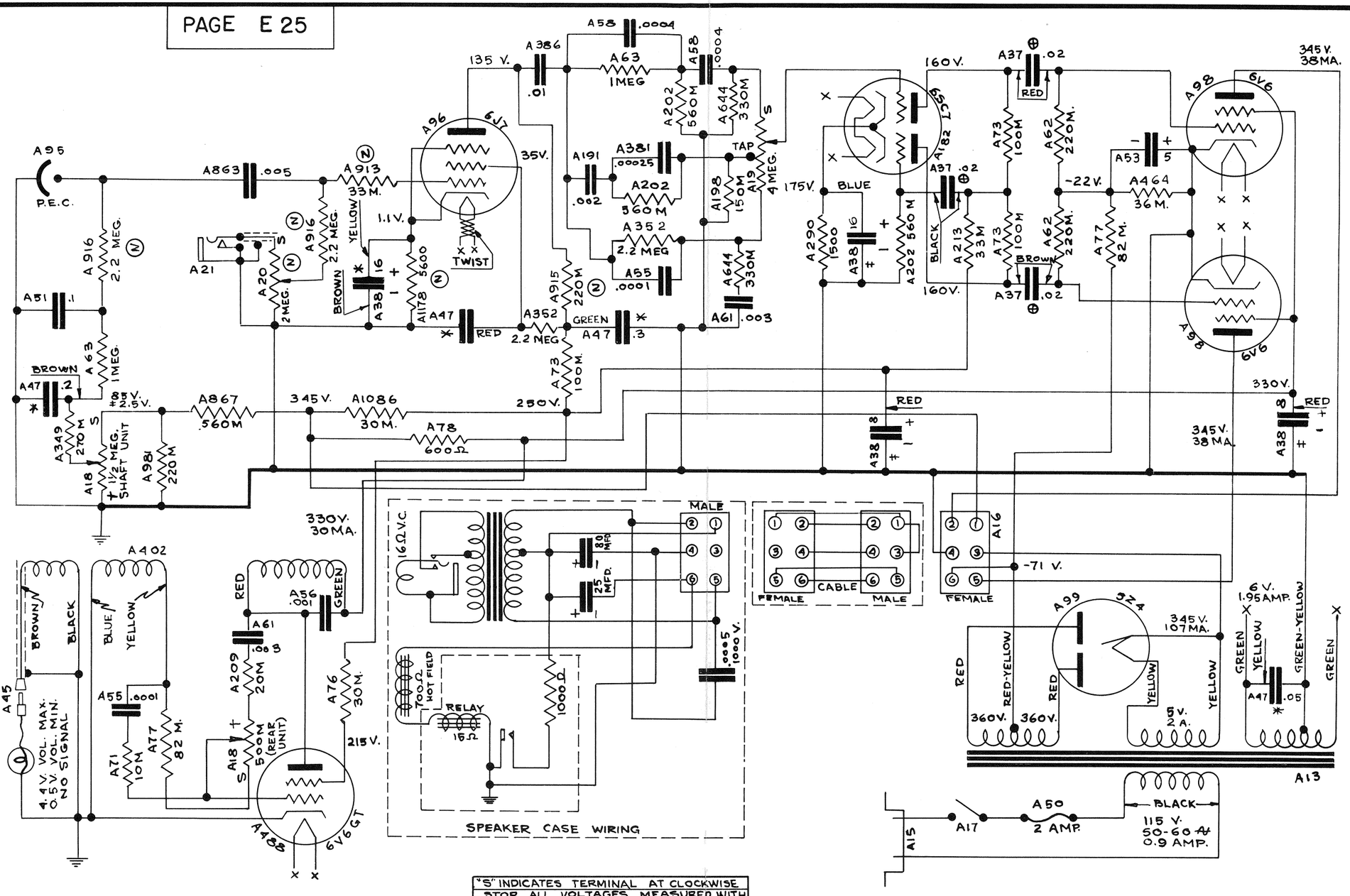

"S" INDICATES TERMINAL AT CLOCKWISE STOP. ALL VOLTAGES MEASURED WITH EXCITER LAMP FULL ON AND NO SIGNAL AT 115V. LINE. ALL VOLTAGES MEASURED TO GROUND.
× ‡ ⊕ DENOTE CAPACITORS LOCATED IN BANK.
† INDICATES CONTROLS ON SAME SHAFT
(N) INDICATES NOISE TESTED RESISTOR

WIRING COLOR CODE	
WHITE - GROUND	BROWN - SCREEN
YELLOW - CATHODE	BLUE - PLATE
RED - B+	BLACK - HEATER
GREEN - GRID	

AS 117

SERVICE DATA

AMPLIFIER WIRING DIAGRAM

COMMERICAL ACADEMY & UTILITY
60 CYCLE FILMOSOUND

FOR USE WITH
AMPLIFIER 03473

DATE 6-14-46

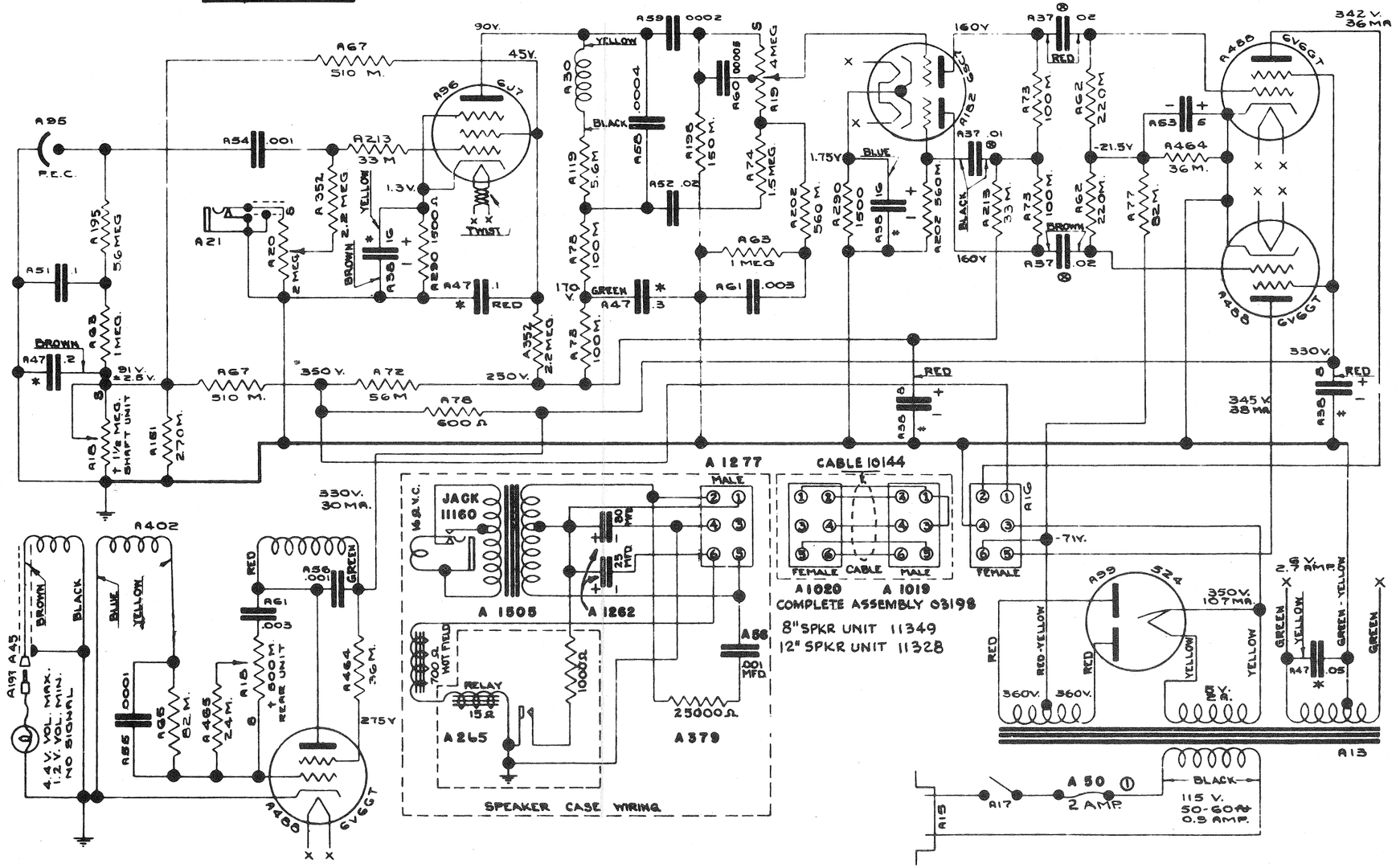

"S" INDICATES TERMINAL AT CLOCKWISE STOP. ALL VOLTAGES MEASURED WITH EXCITER LAMP FULL ON AND NO SIGNAL AT 115 V. LINE. ALL VOLTAGES MEASURED TO GROUND

* & ⊗ DENOTE CAPACITORS LOCATED IN BANK.

† INDICATED CONTROLS ON SAME SHAFT

WIRING COLOR CODE	
WHITE - GROUND	BROWN - SCREEN
YELLOW - CATHODE	BLUE - PLATE
RED - B+	BLACK - HEATER
GREEN - GRID	

SERVICE DATA

AMPLIFIER WIRING DIAGRAM

COMMERICAL . ACADEMY . & UTILITY
60 CYCLE FILMOSOUND

FOR USE ONLY WITH AMPLIFIER PART NO. 03634

DATE 3-22-40

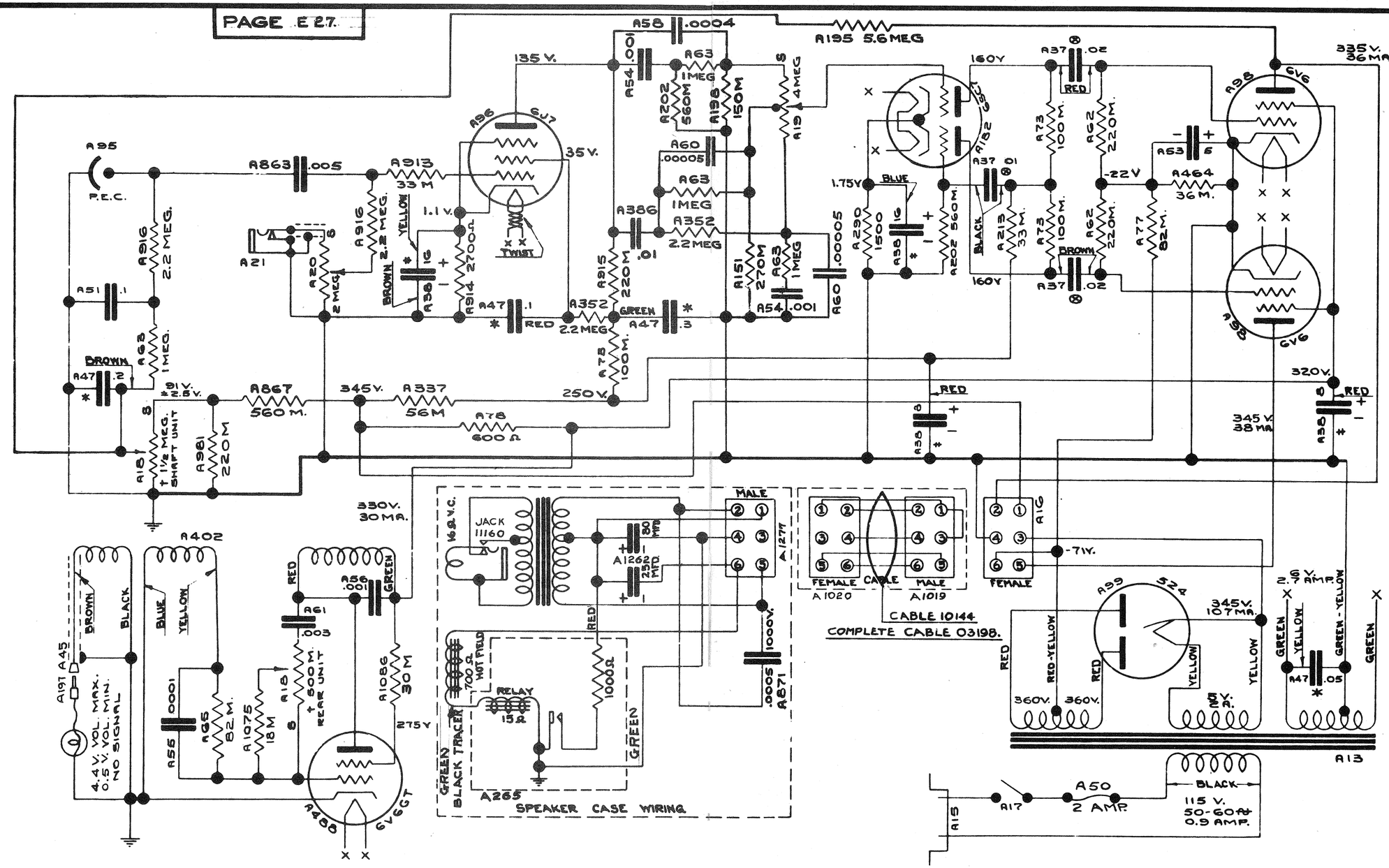

"S" INDICATES TERMINAL AT CLOCKWISE STOP. ALL VOLTAGES MEASURED WITH EXCITER LAMP FULL ON AND NO SIGNAL AT 115 V. LINE. ALL VOLTAGES MEASURED TO GROUND

* ‡ ⊕ DENOTE CAPACITORS LOCATED IN BANK.

† INDICATED CONTROLS ON SAME SHAFT

WIRING COLOR CODE	
WHITE - GROUND	BROWN - SCREEN
YELLOW - CATHODE	BLUE - PLATE
RED - B+	BLACK - HEATER
GREEN - GRID	

FOR USE WITH AMPLIFIERS BEARING SERIAL NUMBERS FROM 100001 TO 100900 INCLUSIVE.

A59

SERVICE DATA

AMPLIFIER WIRING DIAGRAM

COMMERICAL, ACADEMY, & UTILITY
60 CYCLE FILMOSOUND

FOR USE ONLY WITH AMPLIFIER PART NO. 12634 DATE 7-31-40

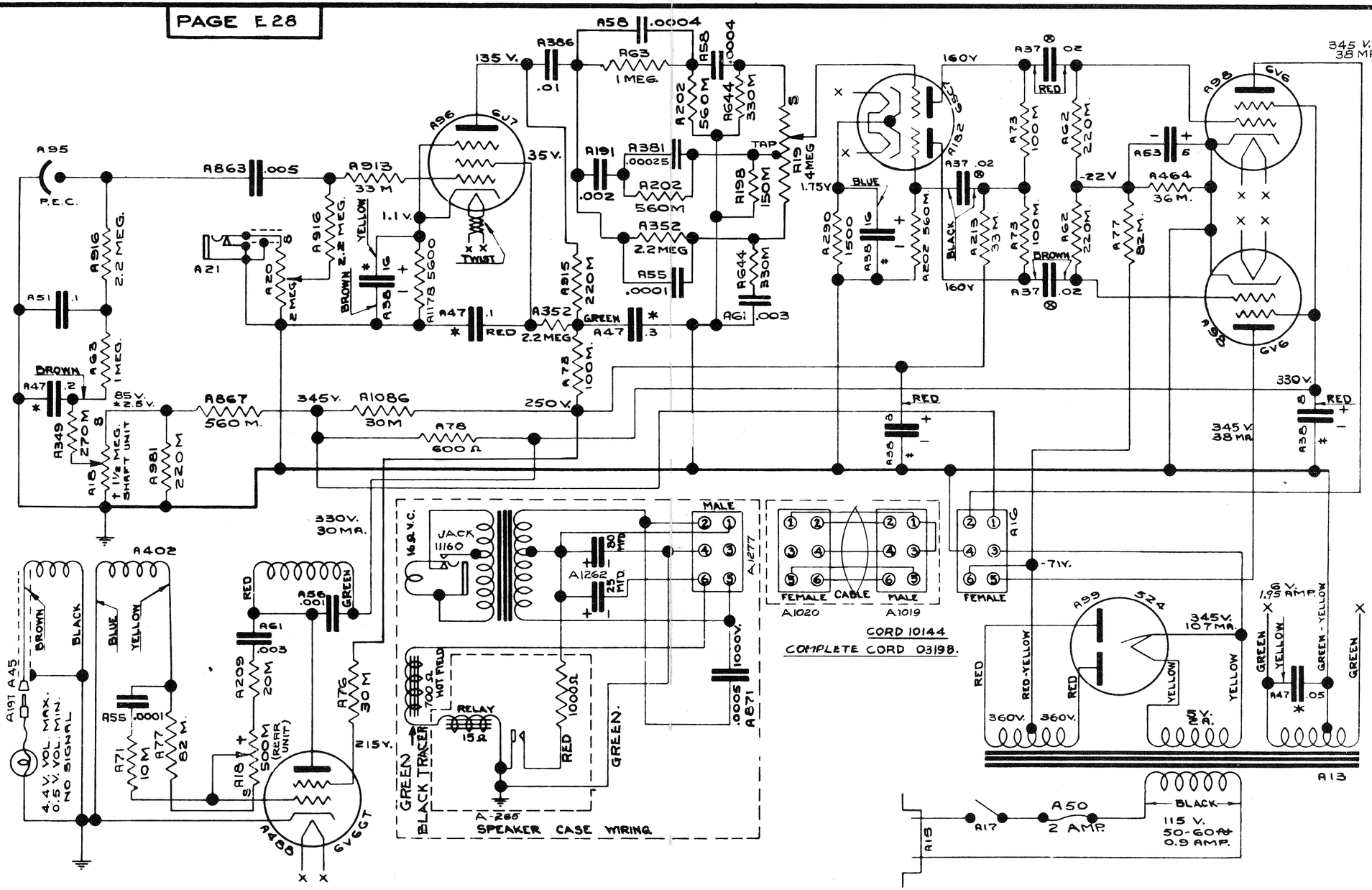

CORD 10144
COMPLETE CORD 03198.

"S" INDICATES TERMINAL AT CLOCKWISE STOP. ALL VOLTAGES MEASURED WITH EXCITER LAMP FULL ON AND NO SIGNAL AT 115 V. LINE. ALL VOLTAGES MEASURED TO GROUND
& ⊕ DENOTE CAPACITORS LOCATED IN BANK.
⊥ INDICATED CONTROLS ON SAME SHAFT

WIRING COLOR CODE	
WHITE - GROUND	BROWN - SCREEN
YELLOW - CATHODE	BLUE - PLATE
RED - B+	BLACK - HEATER
GREEN - GRID	

FOR USE WITH AMPLIFIERS BEARING SERIAL NUMBERS STARTING WITH 100901.

REVISED ⊗
C.O. 244 3-23-44

AS 37

SERVICE DATA

AMPLIFIER WIRING DIAGRAM

COMMERICAL, ACADEMY, & UTILITY
60 CYCLE FILMOSOUND

FOR USE ONLY WITH AMPLIFIER PART NO. 12634 DATE 2-6-41

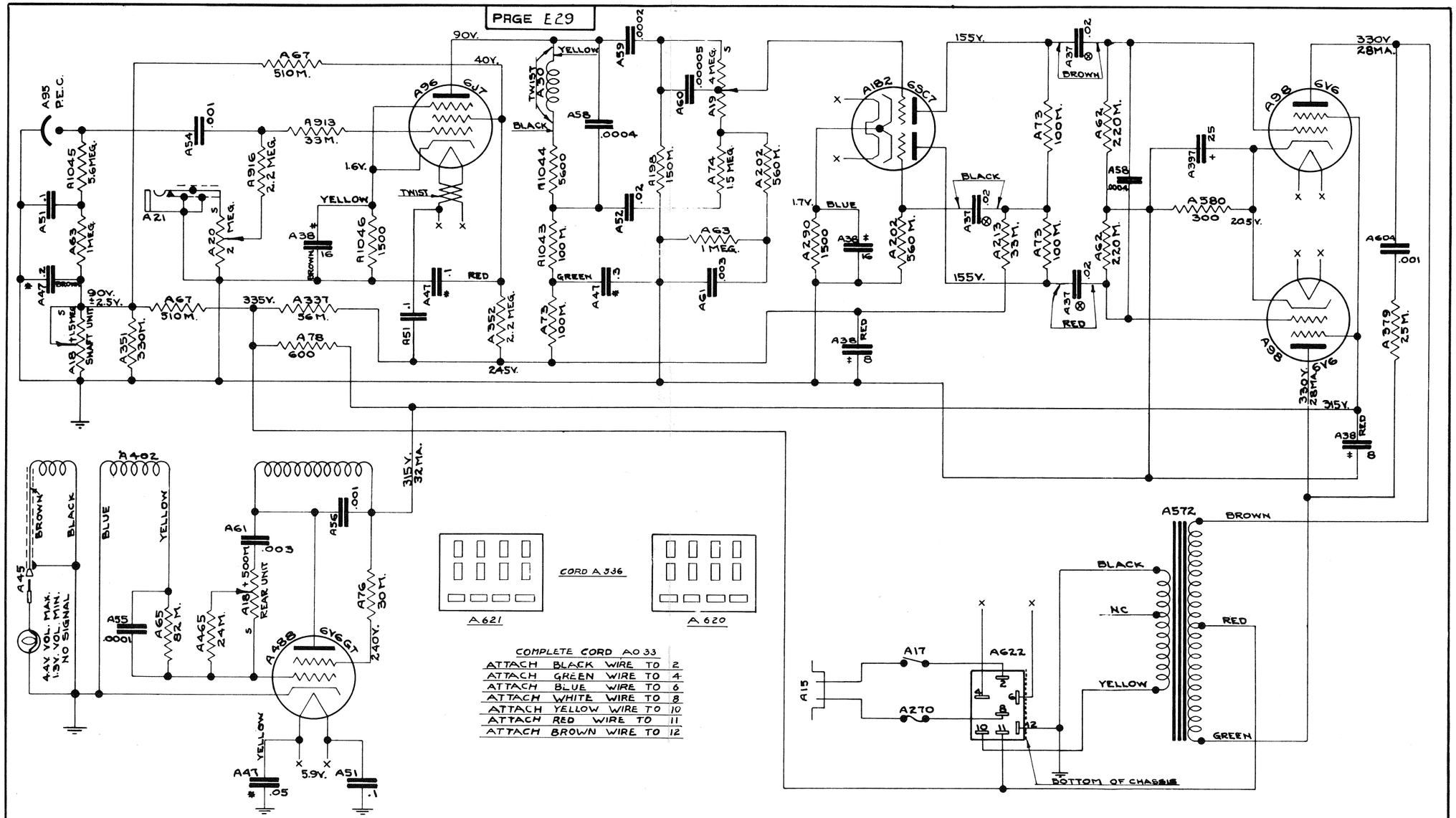

COMPLETE CORD A033

ATTACH	BLACK	WIRE	TO	2
ATTACH	GREEN	WIRE	TO	4
ATTACH	BLUE	WIRE	TO	6
ATTACH	WHITE	WIRE	TO	8
ATTACH	YELLOW	WIRE	TO	10
ATTACH	RED	WIRE	TO	11
ATTACH	BROWN	WIRE	TO	12

"S" INDICATES TERMINAL AT CLOCKWISE STOP. ALL VOLTAGES MEASURED WITH EXCITER LAMP FULL ON AND NO SIGNAL AT 115V. LINE. ALL VOLTAGES MEASURED TO GROUND.
‡ ⊗ DENOTE CAPACITORS LOCATED IN BANK.
† INDICATES CONTROL ON SAME SHAFT.

WIRING COLOR CODE

WHITE - GROUND	BROWN - SCREEN
YELLOW - CATHODE	BLUE - PLATE
RED - B+	BLACK - HEATER
GREEN - GRID	

REVISED ⊗
C.O. 244 3-23-44

A513

SERVICE DATA

AMPLIFIER WIRING DIAGRAM

COMMERICAL, ACADEMY, + UTILITY
A.C. - D.C. FILMOSOUND

FOR USE ONLY WITH AMPLIFIER PART # A056 DATE 5-7-40

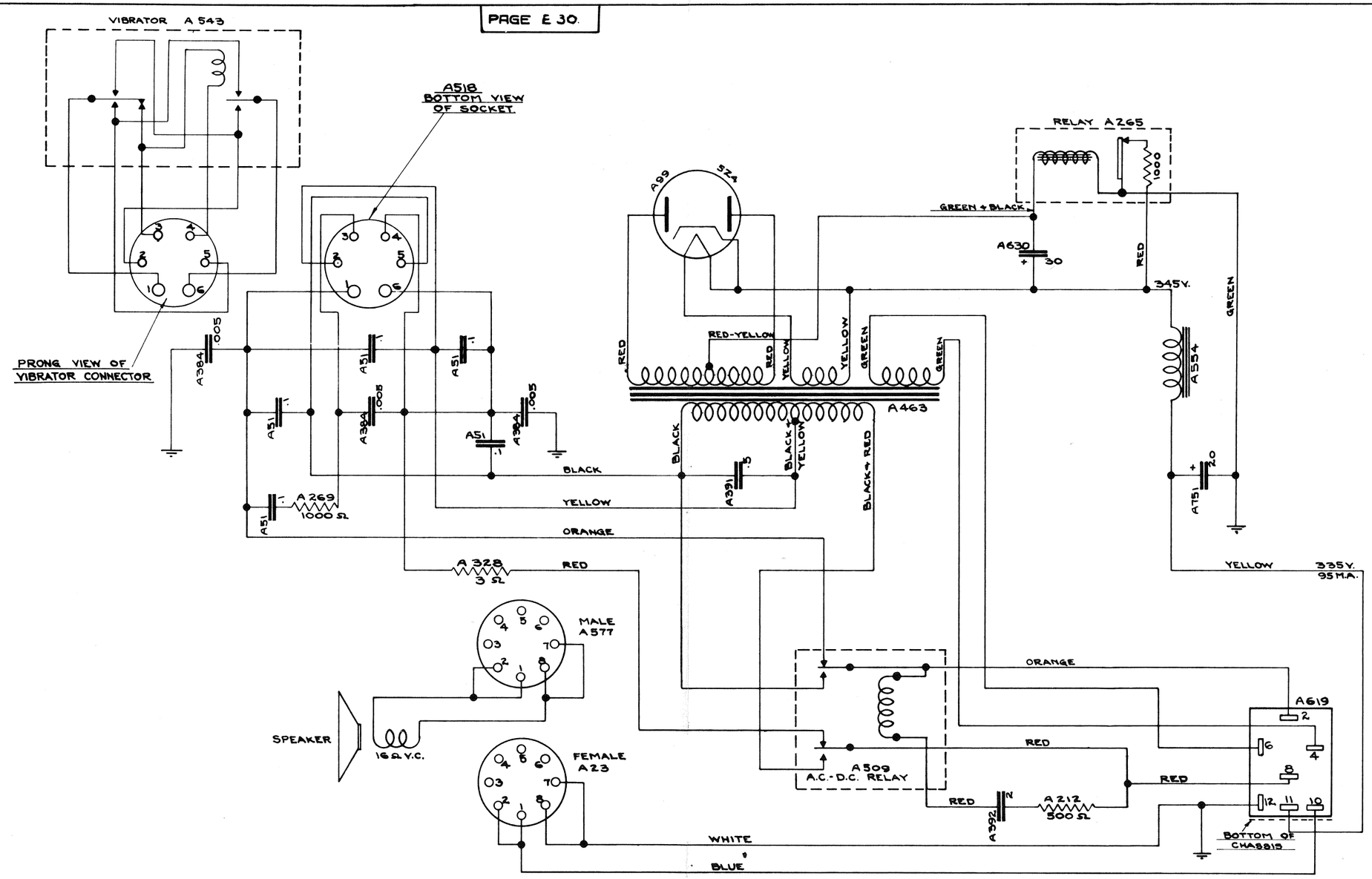

A528

SERVICE DATA
POWER SUPPLY WIRING DIAGRAM
COMMERICAL, ACADEMY + UTILITY A.C.-D.C. FILMOSOUND
FOR USE ONLY WITH POWER SUPPLY PART # A057 DATE 5-8-40

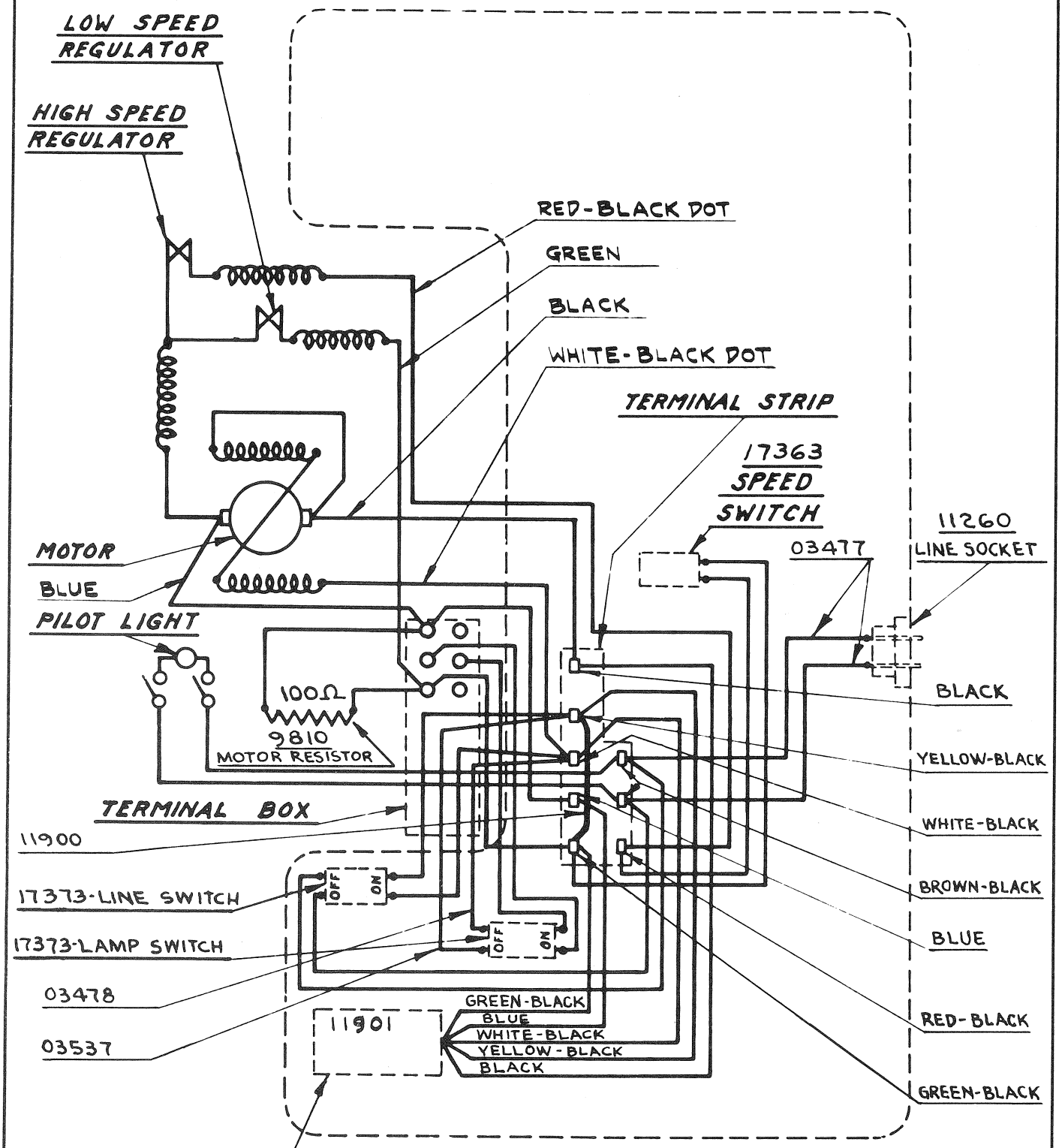

BOTTOM VIEW OF BASE ASSEMBLY SHOWING WIRING.

(60 & 25 CYCLE ACADEMY)

FOR REPLACEMENT ORDER PART # 12903

COLOR CODE

11901		12903
GREEN-BLACK	=	WHITE WITH BLACK & GREEN
BLUE	=	WHITE WITH GREEN & RED
WHITE-BLACK	=	WHITE WITH BROWN
YELLOW-BLACK	=	WHITE WITH BLACK & ORANGE
BLACK	=	WHITE WITH BLACK & RED

Bell & Howell Co. Chicago, Ill. U.S.A.

PROJECTOR WIRING DIAGRAM FOR DESIGN 138 MODELS T-W-Z

DATE 2-17-53	SERVICE DATA	DRAWN APVD.

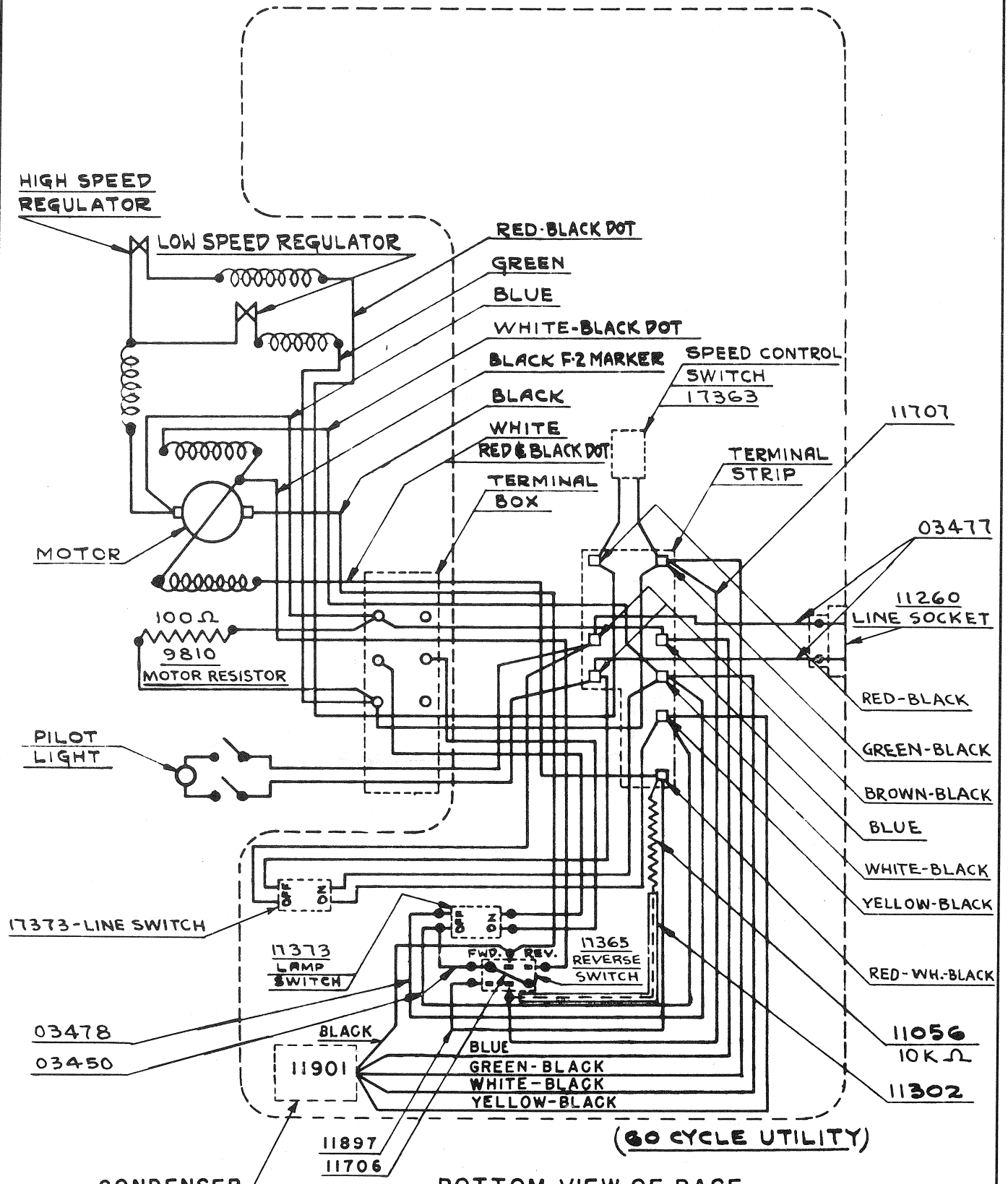

BOTTOM VIEW OF BASE ASSEMBLY SHOWING WIRING

COLOR CODE

11901		12903
GREEN-BLACK	=	WHITE WITH BLACK & GREEN
BLUE	=	WHITE WITH GREEN & RED
WHITE-BLACK	=	WHITE WITH BROWN
YELLOW-BLACK	=	WHITE WITH BLACK & ORANGE
BLACK	=	WHITE WITH BLACK & RED

Bell & Howell Co. Chicago, Ill. U.S.A.

PROJECTOR WIRING DIAGRAM FOR DESIGN 138 MODELS R-U-X

DATE 2-17-53	SERVICE DATA	DRAWN APVD.

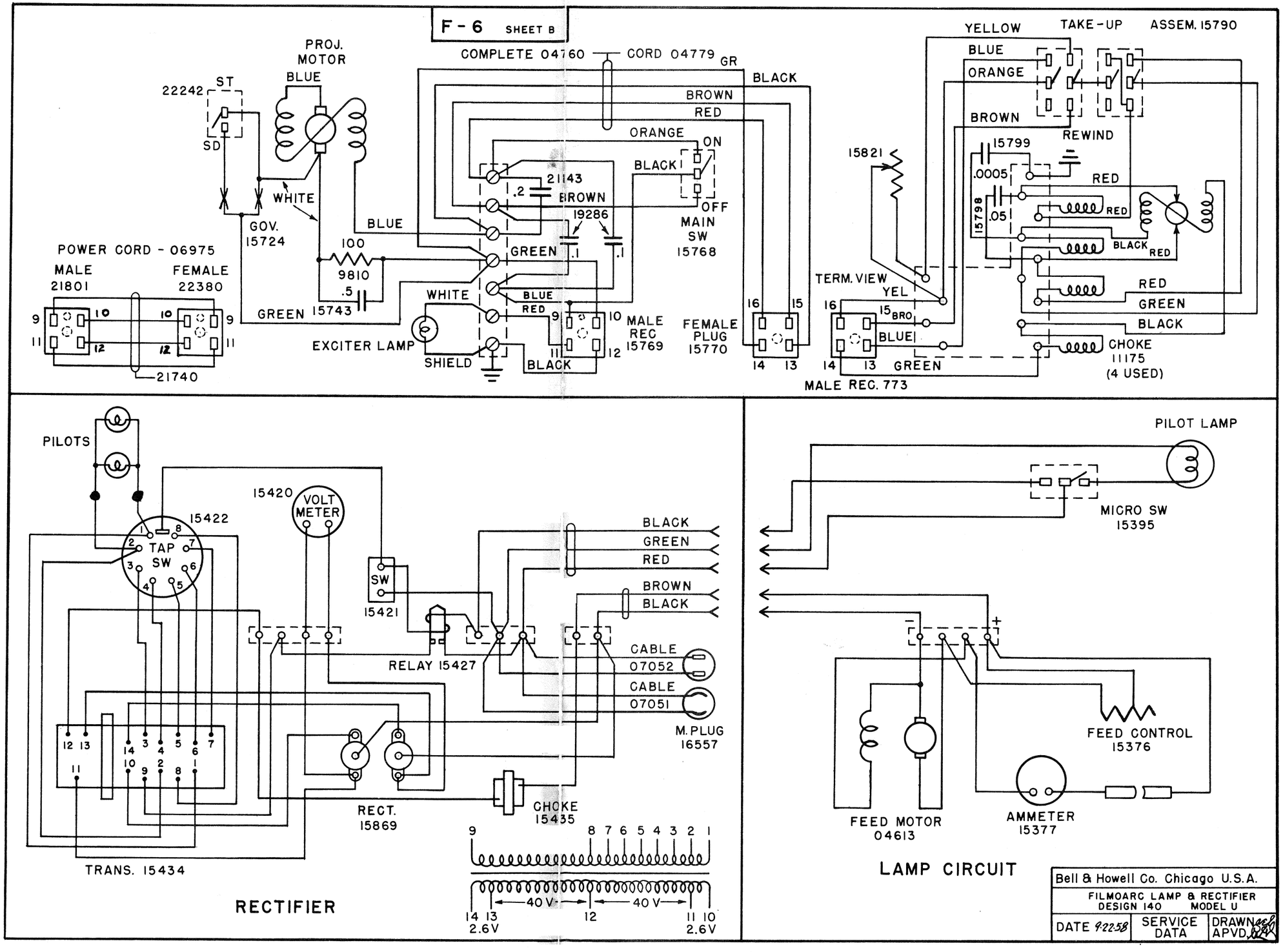
F - 6 SHEET B
PROJ. MOTOR
BLUE
22242
ST
SD
WHITE
GOV. 15724
POWER CORD - 06975
MALE 21801
FEMALE 22380
21740
100
9810
.5
GREEN 15743
EXCITER LAMP
WHITE
SHIELD
COMPLETE 04760
CORD 04779
GR
BLACK
BROWN
RED
ORANGE
ON
BLACK
OFF
MAIN SW 15768
21143
.2
BROWN
19286
.1
.1
GREEN
BLUE
RED
BLACK
MALE REC 15769
FEMALE PLUG 15770
YELLOW
TAKE-UP
ASSEM. 15790
BLUE
ORANGE
BROWN
REWIND
15821
15799
.0005
RED
15798
.05
RED
BLACK
RED
TERM. VIEW
YEL
BRO
BLUE
GREEN
MALE REC. 773
RED
GREEN
BLACK
CHOKE 11175 (4 USED)
PILOTS
15420
VOLT METER
15422
TAP SW
SW
15421
RELAY 15427
BLACK
GREEN
RED
BROWN
BLACK
CABLE 07052
CABLE 07051
M. PLUG 16557
RECT. 15869
CHOKE 15435
TRANS. 15434
40 V
40 V
2.6V
2.6V
RECTIFIER
PILOT LAMP
MICRO SW 15395
FEED CONTROL 15376
FEED MOTOR 04613
AMMETER 15377
LAMP CIRCUIT
Bell & Howell Co. Chicago U.S.A.
FILMOARC LAMP & RECTIFIER
DESIGN 140 MODEL U
DATE 9-22-58
SERVICE DATA
DRAWN
APVD.

SECTION G

DESIGN 142, MODEL A

GENERAL INFORMATION.

This amplifier used 6F6G tubes in the output. Note that the 6F8G tube is cascade operated, and not phase inverted. The power output is approximately 15 watts. Do not substitute metal for glass 6F6G tubes. Use only 2-ampere fuses.

If the exciter lamp life is short and if the line voltage is not over 117 volts, a change should be made in the oscillator tube wiring. The .003 MFD mica condenser, A-61, which tunes the oscillator is changed to a .001 MFD mica condenser, A604. The 3000-ohms screen resistor A140 is changed to a 5000-ohms, 1-watt resistor A293; the 1000-ohms resistor A368 is changed to a 5000-ohm, 1-watt resistor A293; and the 1000-ohm resistor A368 is changed to a 4000-ohm, 10-watt resistor A373. Resistor A368 is usually found mounted on the oscillator coil terminal on the end plates. Lay resistor A-293 against the oscillator tube socket terminals and connect it to terminals 4 and 6. Resistor A604 is then laid beside resistor A-293 and is connected to terminals 3 & 6.

In cases of high line voltage and where the rectifier tube arcs over and results in fuse blowing, a 150-ohm, 10-watt resistor can be connected in series with the output of the rectifier. Be sure it is connected between the rectifier and first filter condenser. A convenient location for the resistor is in back of the speaker receptacle.

All speaker cables do not have terminals 9 and 10 strapped together in the male plugs. Be sure to do this.

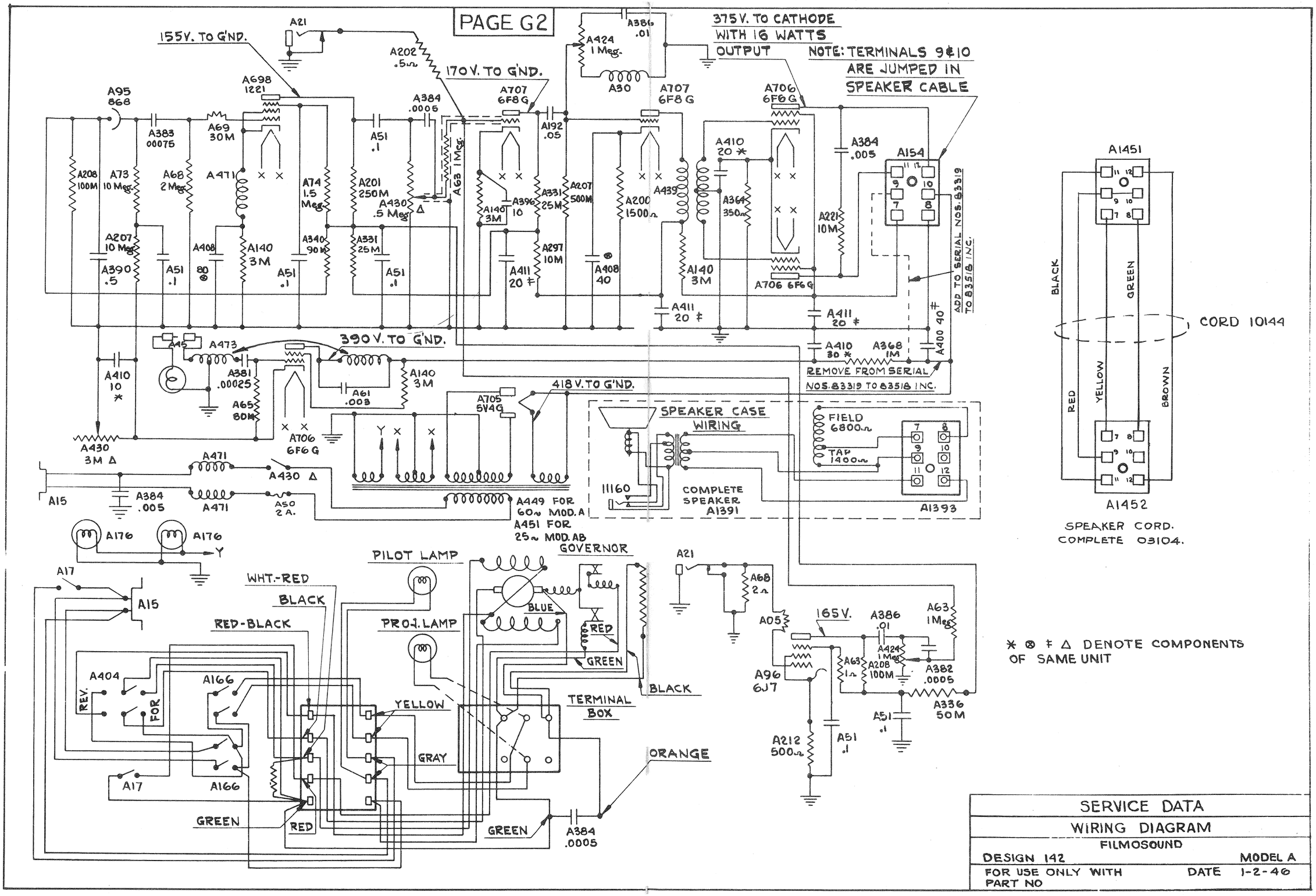

SERVICE DATA	
WIRING DIAGRAM	
FILMOSOUND	
DESIGN 142	MODEL A
FOR USE ONLY WITH PART NO	DATE 1-2-46

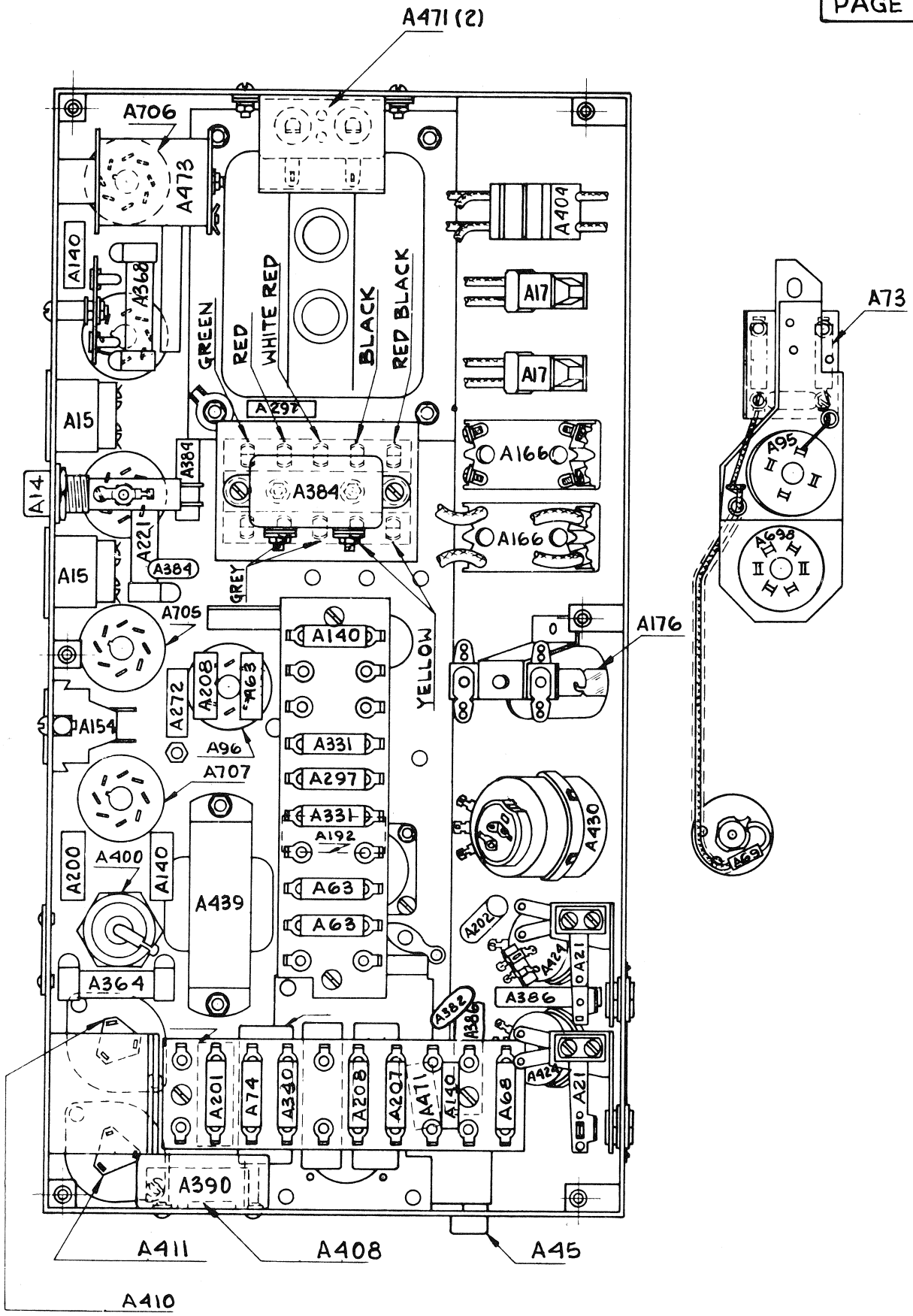

SERVICE DATA	
PLACEMENT OF PARTS	
FILMOSOUND	
DESIGN 142	MODEL A
FOR USE ONLY WITH PART NO.	DATE 1-3-46

DESIGN 142, MODEL B

GENERAL INFORMATION.

This amplifier as well as the Model C and D amplifiers differs from all other Filmosound amplifiers in that two of the tubes have their filaments energized by some of the current flowing in the 6L6 output tubes bias circuit. Consequently, if one of the output tubes is bad it will upset the entire circuit.

The fuse used is a 3-ampere, type 3AG.

The 142B & BB (25-cycle) amplifiers were made in two series. The difference was in the tone control circuit.

The power output is 25 watts.

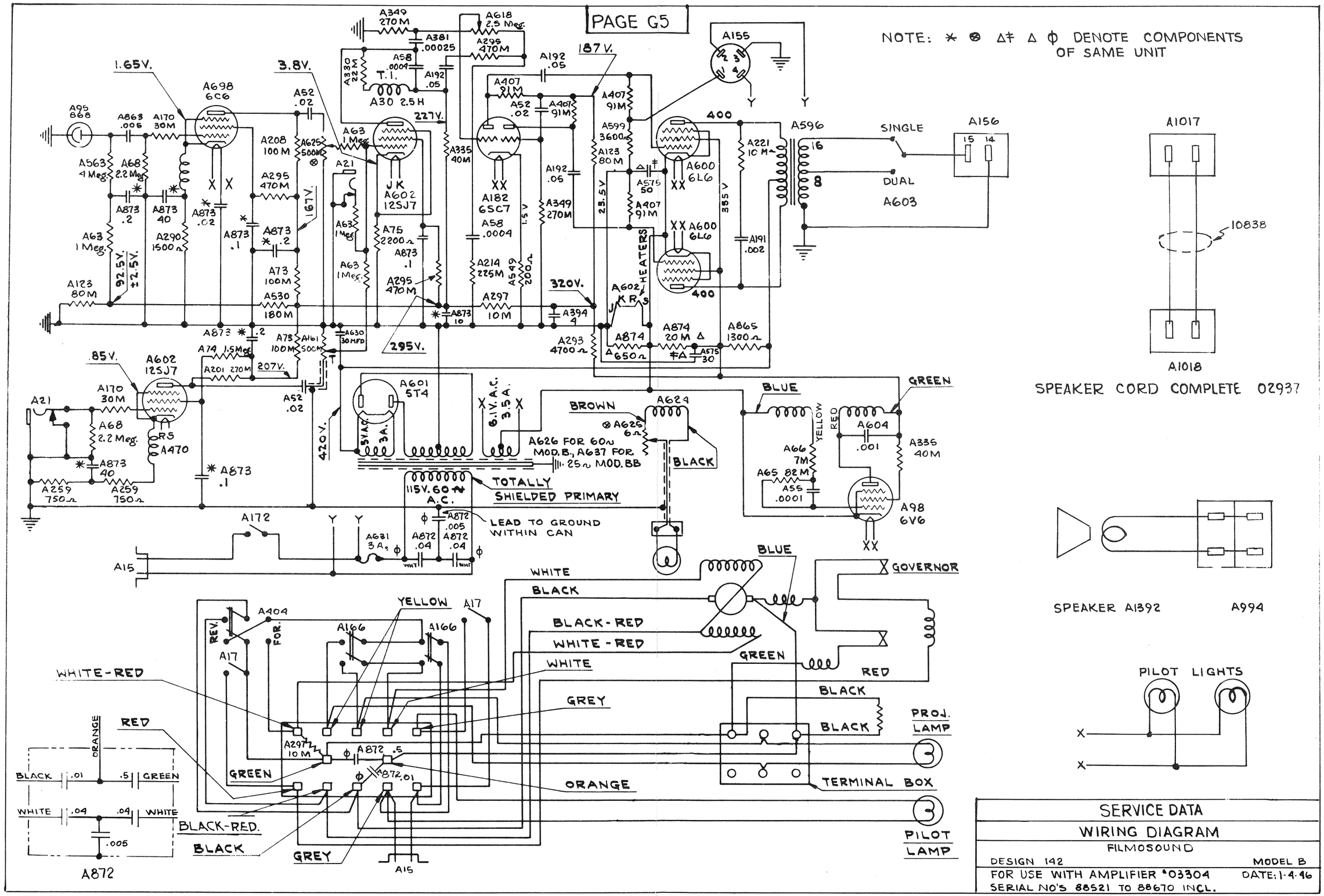

SERVICE DATA	
WIRING DIAGRAM	
FILMOSOUND	
DESIGN 142	MODEL B
FOR USE WITH AMPLIFIER #03304	DATE: 1-4-46
SERIAL NO'S 88521 TO 88670 INCL.	

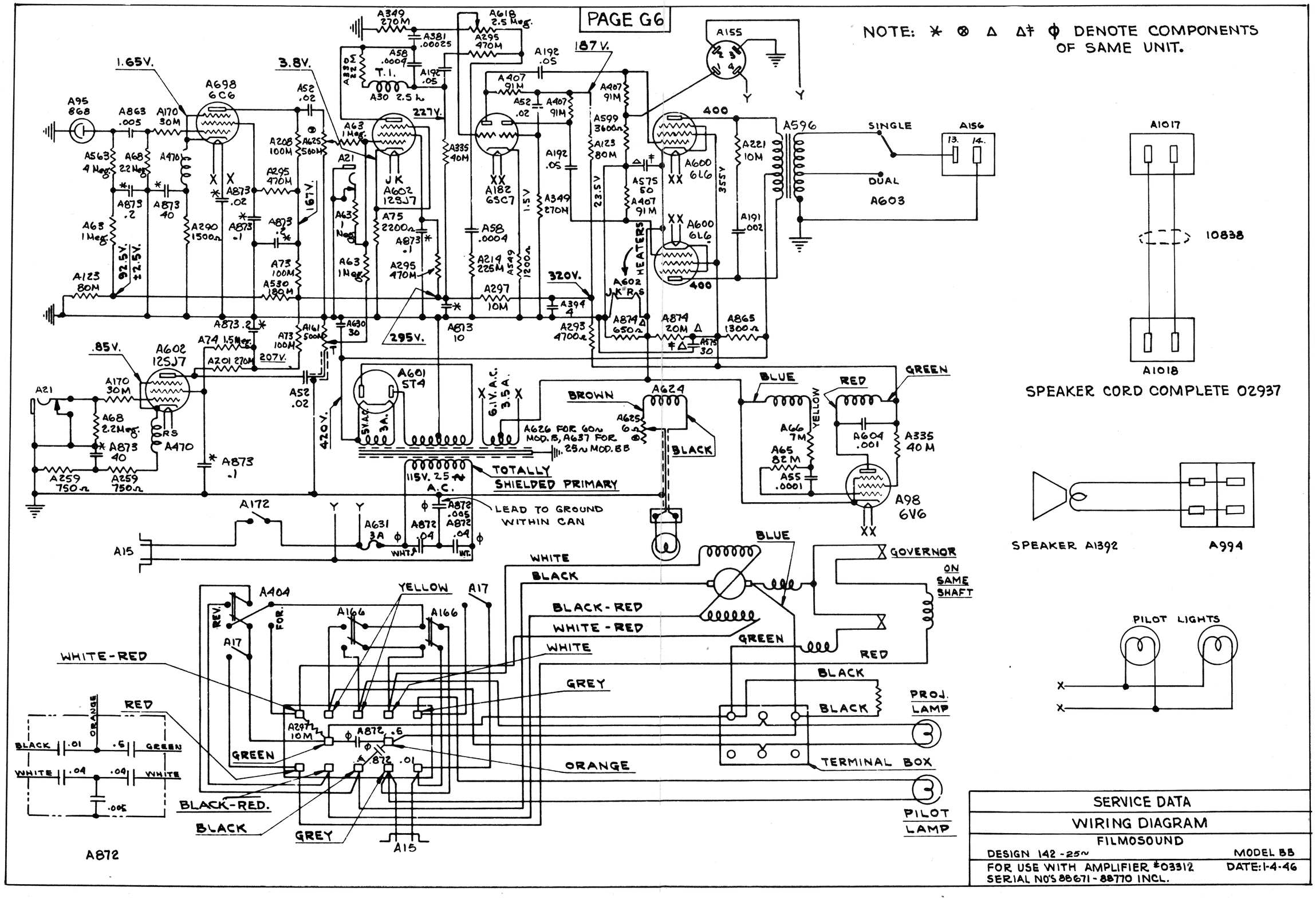

SERVICE DATA	
WIRING DIAGRAM	
FILMOSOUND	
DESIGN 142-25~	MODEL BB
FOR USE WITH AMPLIFIER #03312 SERIAL NO'S 88671-88770 INCL.	DATE: 1-4-46

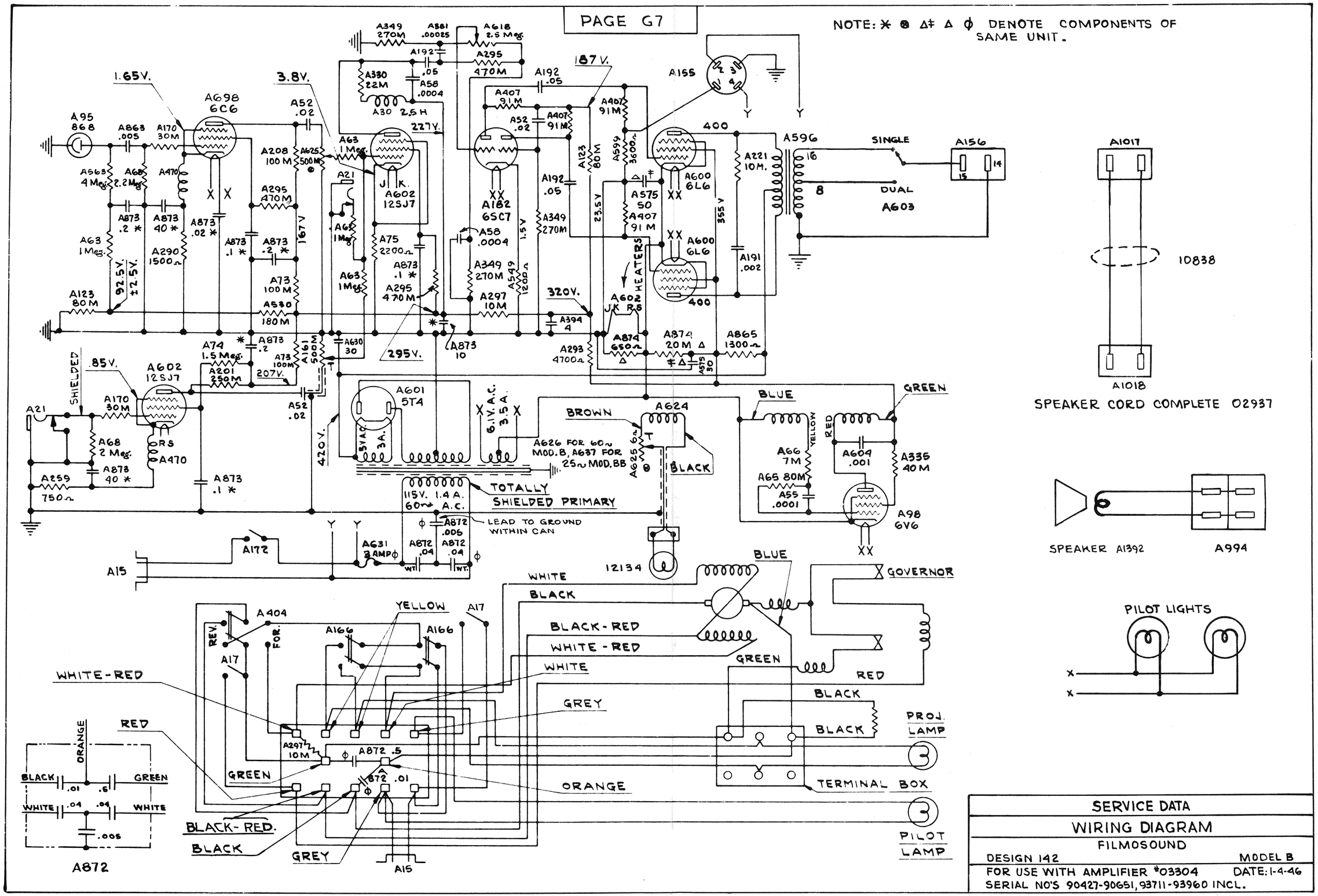

SERVICE DATA	
WIRING DIAGRAM	
FILMOSOUND	
DESIGN 142	MODEL B
FOR USE WITH AMPLIFIER #03304	DATE: 1-4-46
SERIAL NO'S 90427-90651, 93711-93960 INCL.	

NOTE: * Δ Φ Δ‡ ⊗ DENOTE COMPONENTS OF SAME UNIT.

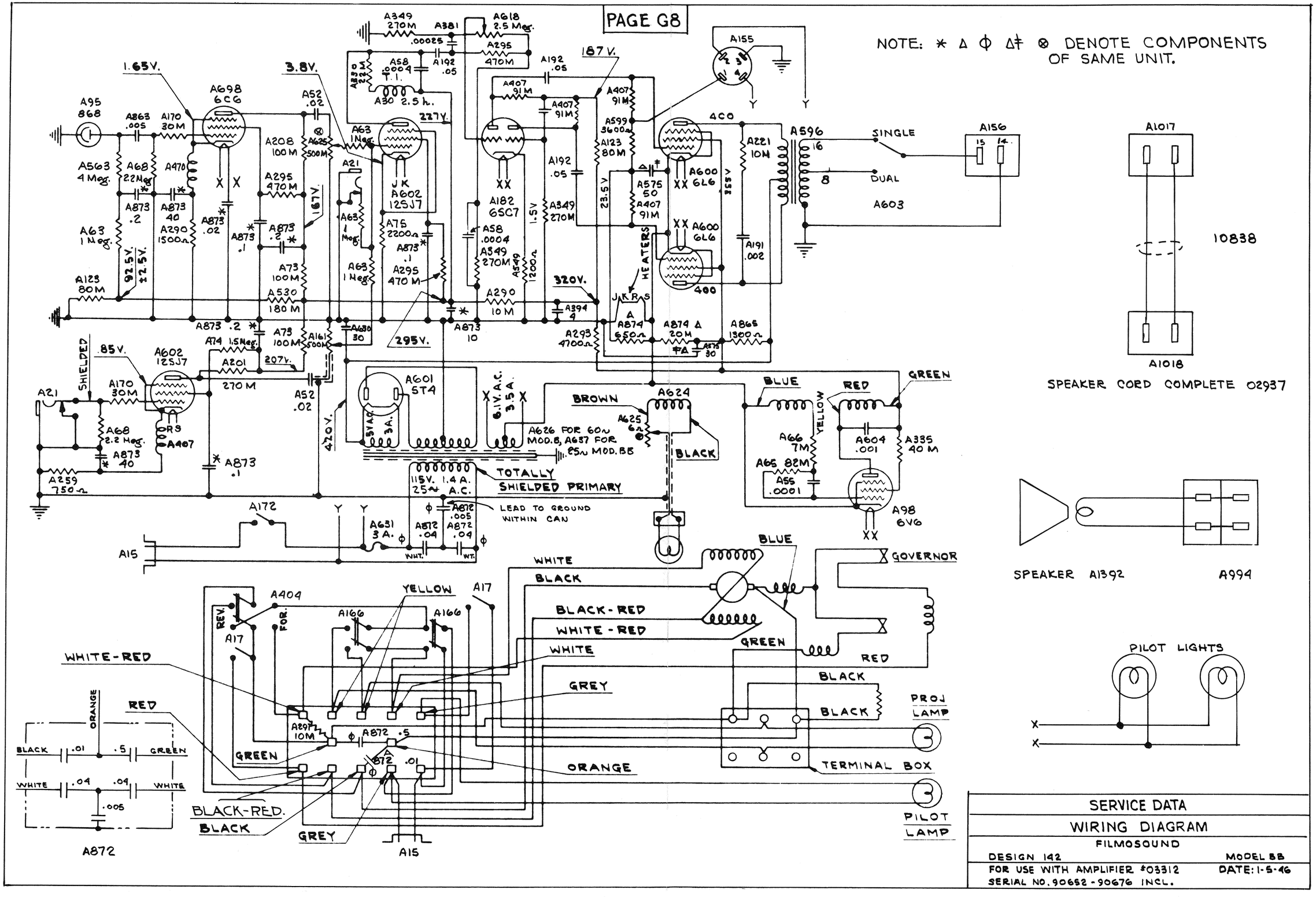

SERVICE DATA	
WIRING DIAGRAM	
FILMOSOUND	
DESIGN 142	MODEL BB
FOR USE WITH AMPLIFIER #03312	DATE: 1-5-46
SERIAL NO. 90652-90676 INCL.	

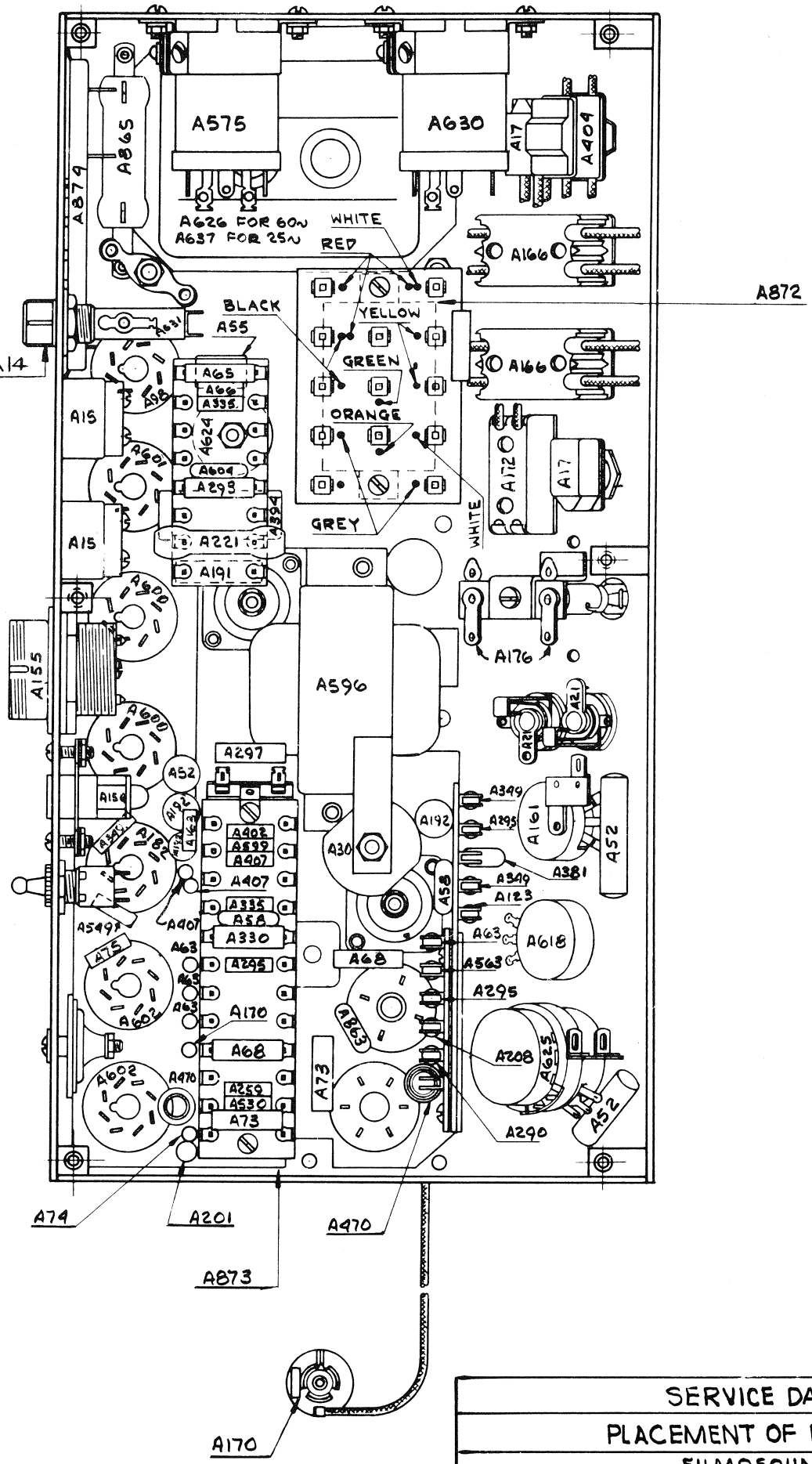

SERVICE DATA

PLACEMENT OF PARTS

FILMOSOUND

DESIGN 142 MODEL B

FOR USE ONLY WITH PART NO. DATE: 1-5-46

DESIGN 142, MODEL C

GENERAL INFORMATION.

Amplifiers beginning with serial number 100901 do not have provisions for connecting a booster amplifier.

The three 12-volt tube filaments are series operated from the 6L6 tubes' cathode circuit.

The fuse used is a 3-ampere, type 3AG.

The power output is 25 watts.

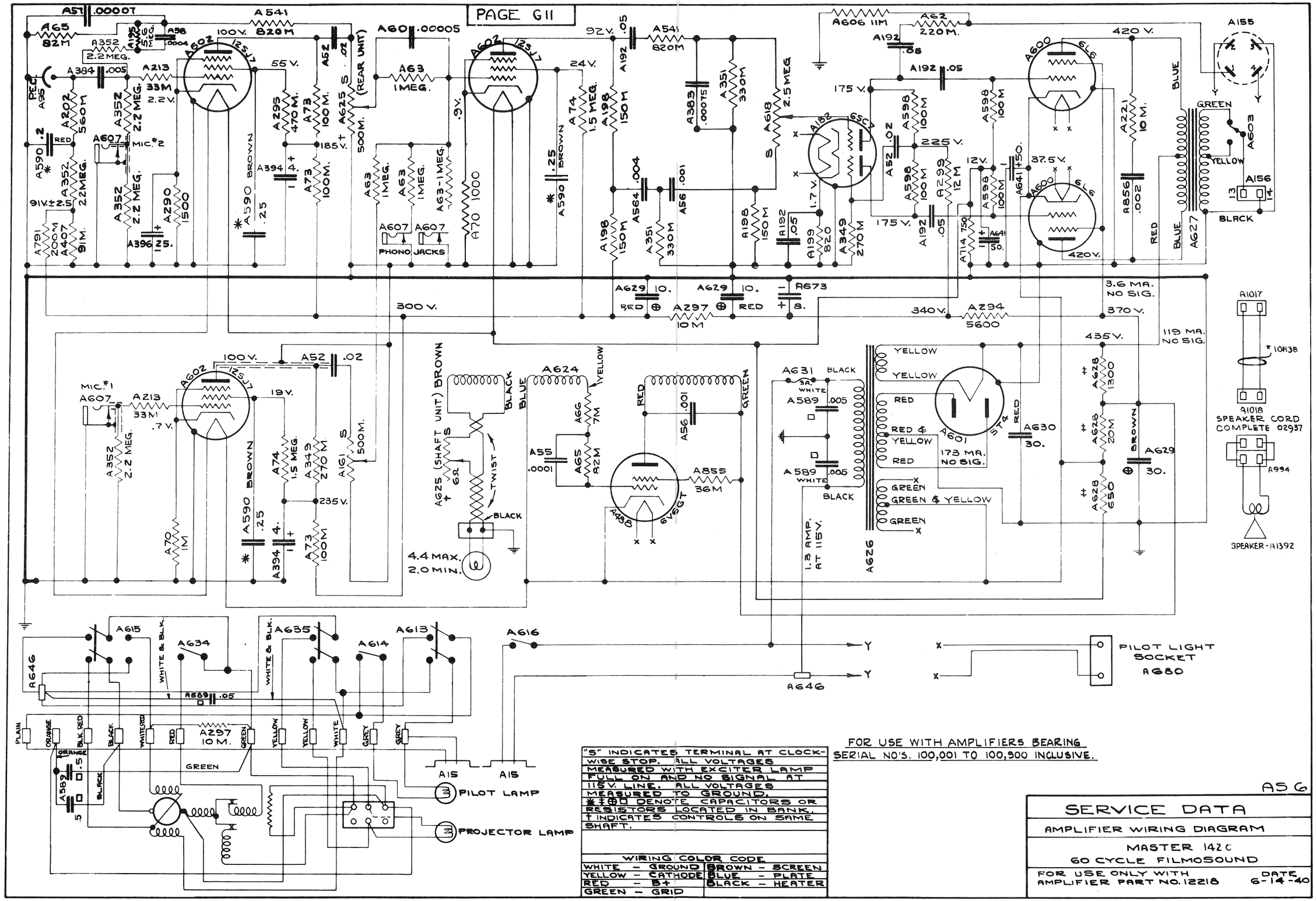

"S" INDICATES TERMINAL AT CLOCKWISE STOP. ALL VOLTAGES MEASURED WITH EXCITER LAMP FULL ON AND NO SIGNAL AT 115V. LINE. ALL VOLTAGES MEASURED TO GROUND. * ‡ ⊕ DENOTE CAPACITORS OR RESISTORS LOCATED IN BANK. † INDICATES CONTROLS ON SAME SHAFT.

WIRING COLOR CODE	
WHITE – GROUND	BROWN – SCREEN
YELLOW – CATHODE	BLUE – PLATE
RED – B+	BLACK – HEATER
GREEN – GRID	

FOR USE WITH AMPLIFIERS BEARING SERIAL NO'S. 100,001 TO 100,900 INCLUSIVE.

A5 G

SERVICE DATA

AMPLIFIER WIRING DIAGRAM

MASTER 142C

60 CYCLE FILMOSOUND

FOR USE ONLY WITH AMPLIFIER PART NO. 12218

DATE 6-14-40

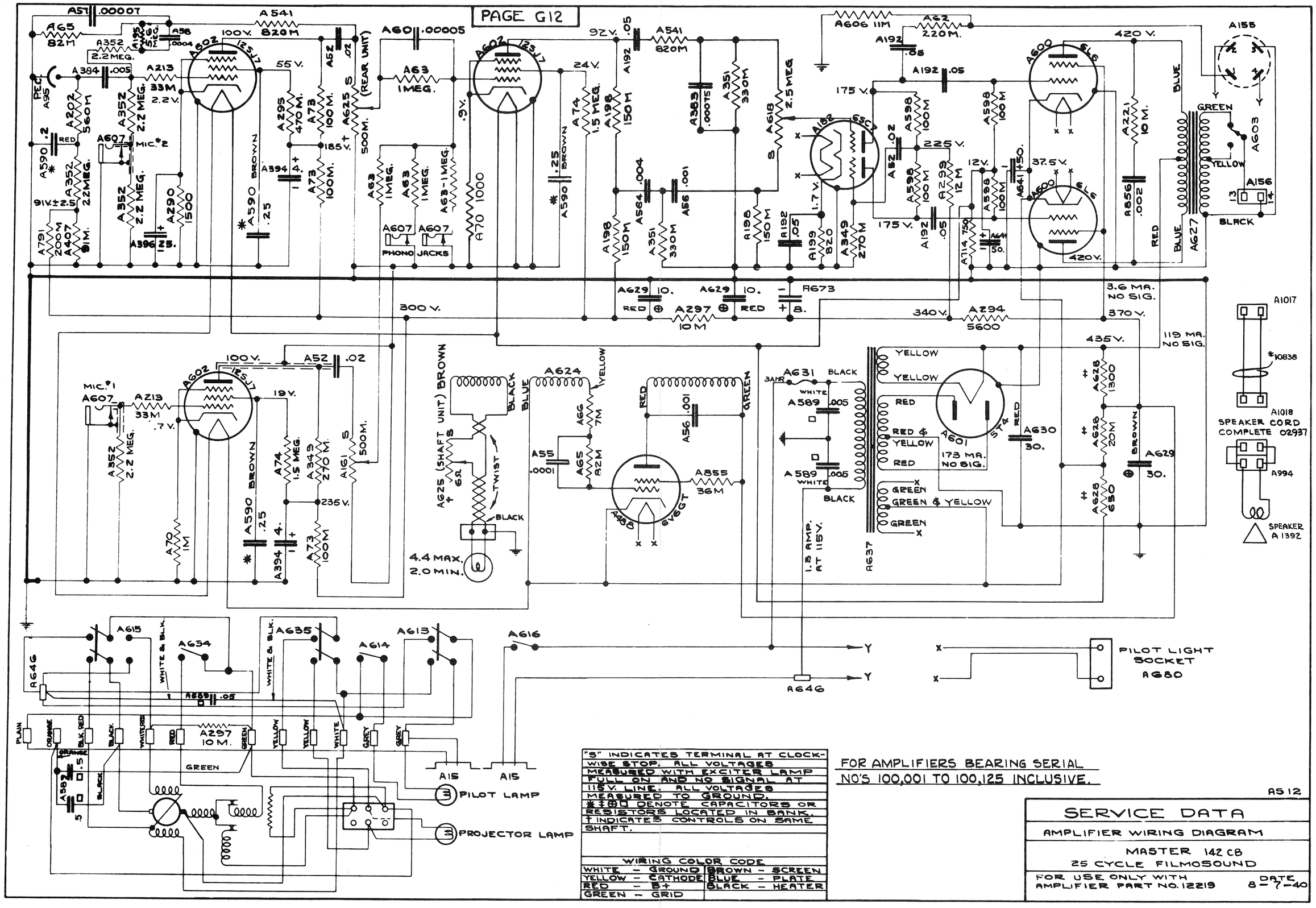

"S" INDICATES TERMINAL AT CLOCKWISE STOP. ALL VOLTAGES MEASURED WITH EXCITER LAMP FULL ON AND NO SIGNAL AT 115V. LINE. ALL VOLTAGES MEASURED TO GROUND.

*‡⊕□ DENOTE CAPACITORS OR RESISTORS LOCATED IN BANK.

† INDICATES CONTROLS ON SAME SHAFT.

WIRING COLOR CODE

WHITE – GROUND	BROWN – SCREEN
YELLOW – CATHODE	BLUE – PLATE
RED – B+	BLACK – HEATER
GREEN – GRID	

FOR AMPLIFIERS BEARING SERIAL NO'S 100,001 TO 100,125 INCLUSIVE.

AS 12

SERVICE DATA

AMPLIFIER WIRING DIAGRAM

MASTER 142 CB
25 CYCLE FILMOSOUND

FOR USE ONLY WITH AMPLIFIER PART NO. 12219

DATE 8-7-40

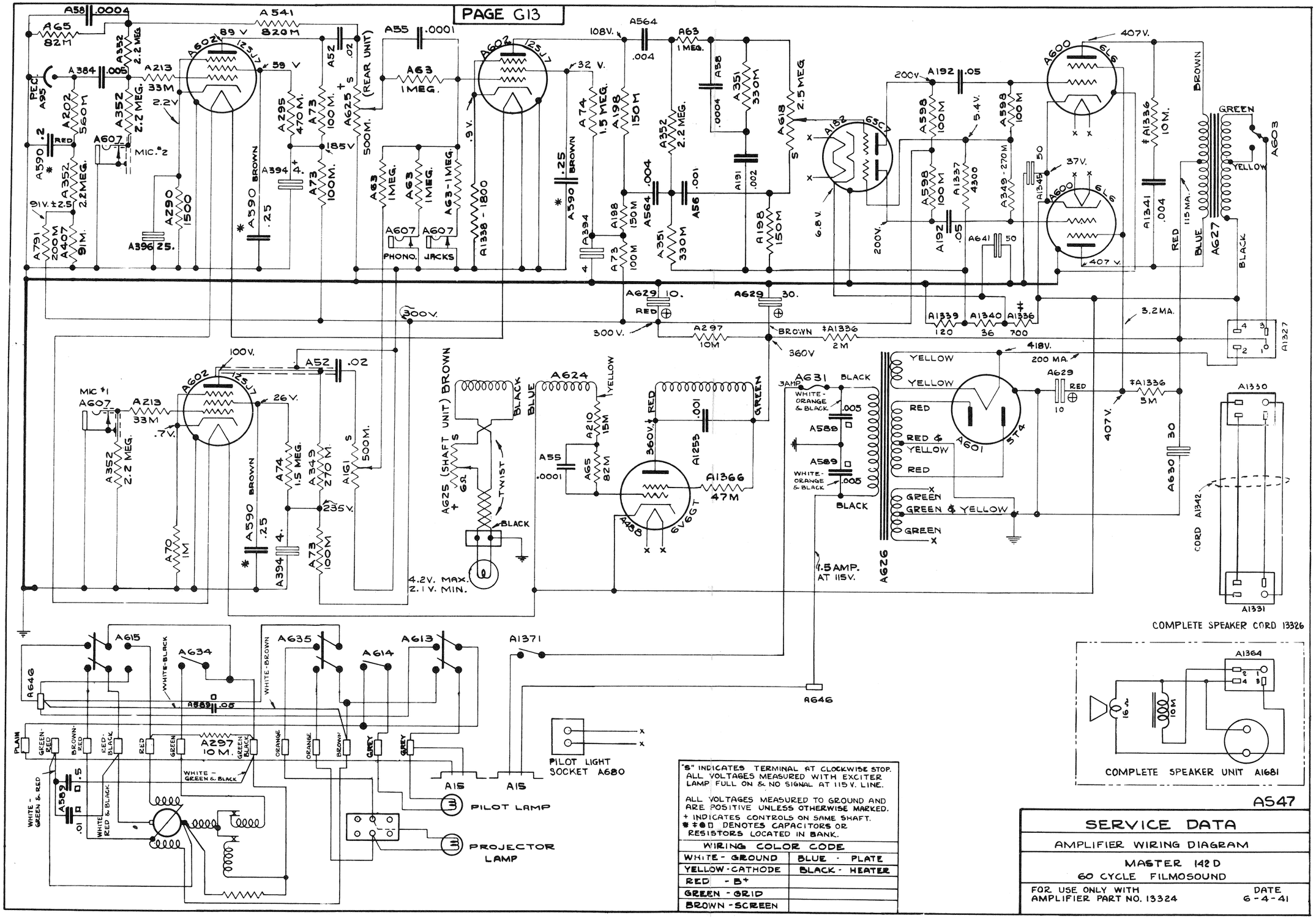

"S" INDICATES TERMINAL AT CLOCKWISE STOP. ALL VOLTAGES MEASURED WITH EXCITER LAMP FULL ON & NO SIGNAL AT 115 V. LINE.

ALL VOLTAGES MEASURED TO GROUND AND ARE POSITIVE UNLESS OTHERWISE MARKED.

+ INDICATES CONTROLS ON SAME SHAFT.

* ‡ ▯ DENOTES CAPACITORS OR RESISTORS LOCATED IN BANK.

WIRING COLOR CODE	
WHITE - GROUND	BLUE - PLATE
YELLOW - CATHODE	BLACK - HEATER
RED - B+	
GREEN - GRID	
BROWN - SCREEN	

SERVICE DATA

AMPLIFIER WIRING DIAGRAM

MASTER 142 D

60 CYCLE FILMOSOUND

FOR USE ONLY WITH AMPLIFIER PART NO. 13324

DATE 6-4-41

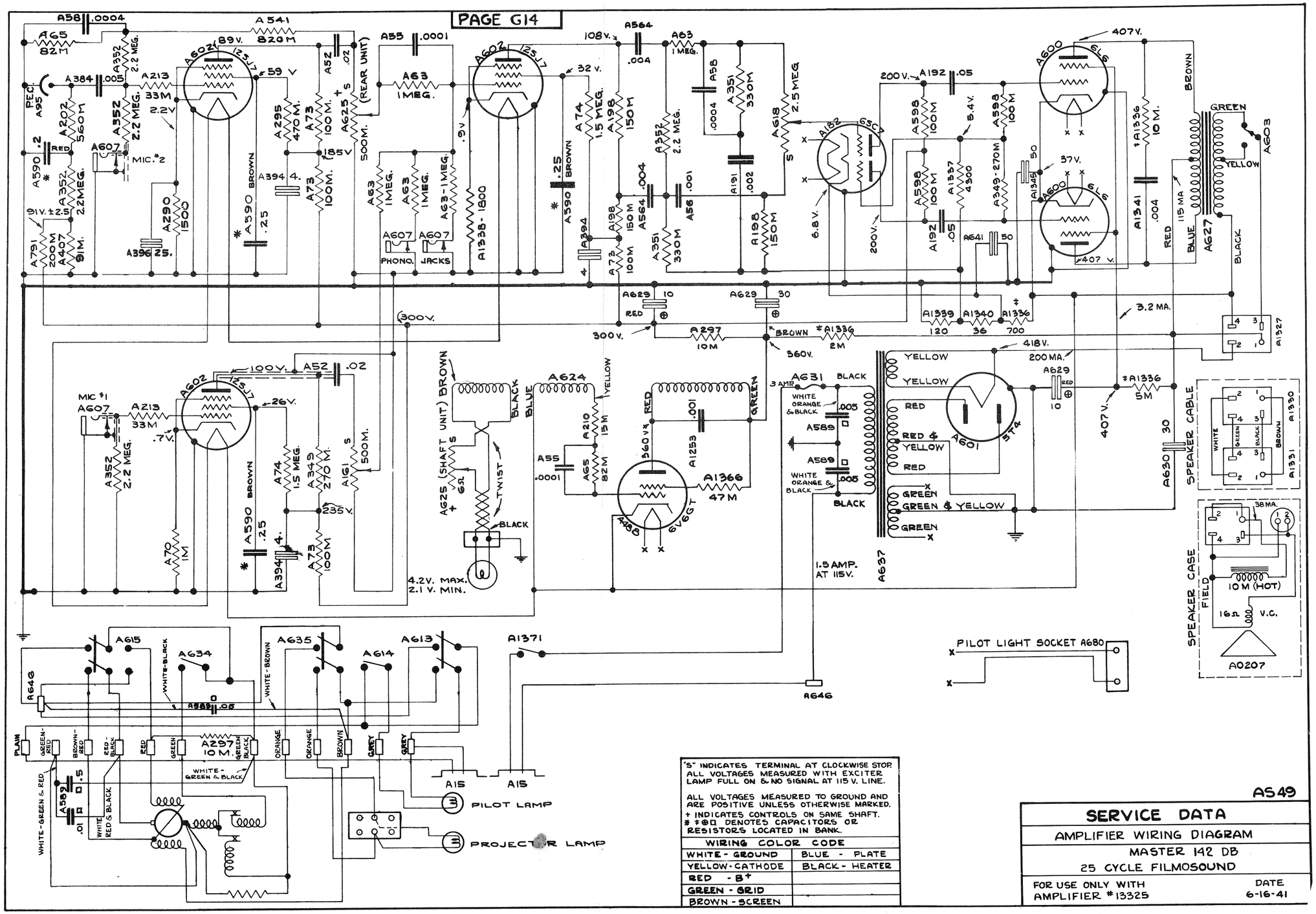

"S" INDICATES TERMINAL AT CLOCKWISE STOP.
ALL VOLTAGES MEASURED WITH EXCITER LAMP FULL ON & NO SIGNAL AT 115 V. LINE.

ALL VOLTAGES MEASURED TO GROUND AND ARE POSITIVE UNLESS OTHERWISE MARKED.
+ INDICATES CONTROLS ON SAME SHAFT.
# ‡ ⊕ ⊡ DENOTES CAPACITORS OR RESISTORS LOCATED IN BANK.

WIRING COLOR CODE	
WHITE - GROUND	BLUE - PLATE
YELLOW - CATHODE	BLACK - HEATER
RED - B+	
GREEN - GRID	
BROWN - SCREEN	

A549

SERVICE DATA

AMPLIFIER WIRING DIAGRAM

MASTER 142 DB

25 CYCLE FILMOSOUND

FOR USE ONLY WITH AMPLIFIER #13325

DATE 6-16-41

DESIGN 156, ALL MODELS

GENERAL INFORMATION.

Amplifiers part #12814, 12815, 13728, and 13817 use an electrodynamic speaker. The field consists of two windings. The 19000-ohm winding is across the B Power supply and the 4000-ohm winding feeds the oscillator. Should the latter winding short out it will cause excessive exciter lamp voltage. Should the 19000-ohm winding open up the field will not be properly energized, causing the volume to be low.

While the base pins and connection are alike, the 5Z4 and 5Y3GT rectifiers are not interchangeable in these amplifiers. Use the one indicated on the drawing.

All projectors using these amplifiers are equipped with a remote volume control jack. The control consists of a series rheostat connected into the exciter lamp circuit. The plug and jack are undersized phone type so that a microphone may not be accidentally connected to the circuit.

The special A. C. receptacle on the amplifiers is for connecting a polarity changer to a lower voltage tap on the power transformer in addition to making the regular line connection to the amplifier transformer.

Amplifiers part #12814, 12815, 13728 have two input circuits in addition to film. The microphone input has a volume control while the phonograph input does not.

All Design 156 amplifiers deliver 12 watts of power.

DESIGN 156, AMPLIFIER NO. 12814

Two series of these amplifiers were manufactured. The difference was in the tone control circuits. The first series used one variable control and two switches. These switches shifted the frequency characteristics of the variable control circuit. The second series had two separate variable controls.

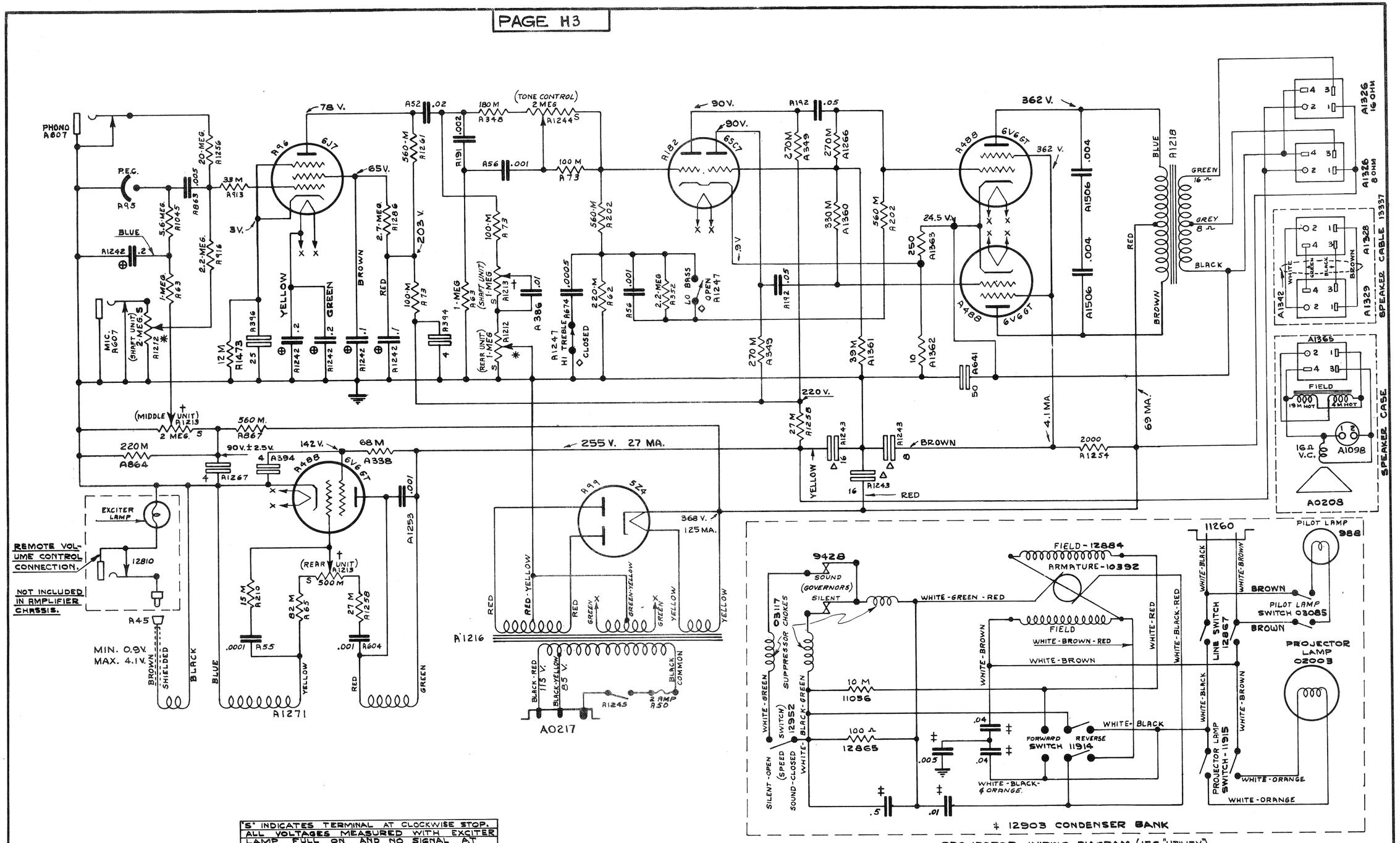

PROJECTOR WIRING DIAGRAM (156 "UTILITY")
NOT INCLUDED IN AMPLIFIER CHASSIS

'S' INDICATES TERMINAL AT CLOCKWISE STOP. ALL VOLTAGES MEASURED WITH EXCITER LAMP FULL ON AND NO SIGNAL AT 115 VOLT LINE. ALL VOLTAGES MEASURED TO GROUND.			
⊕ △ INDICATES CAPACITORS LOCATED IN BANK.			
+ ✱ INDICATES CONTROLS ON SAME SHAFT.			
◇ SWITCHES SHOWN WITH SLIDE BUTTONS IN DOWN POSITION.			
WIRING COLOR CODE			
WHITE	GROUND	BROWN	SCREEN
YELLOW	CATHODE	BLUE	PLATE
RED	B+	BLACK	HEATER
GREEN	GRID		

NOTE:-
FOR USE WITH AMPLIFIERS BEARING SERIAL NUMBERS UP TO #100,852 INCL.

AS43

SERVICE DATA

AMPLIFIER WIRING DIAGRAM

UTILITY, ACADEMY, & COMMERCIAL
DESIGN 156 FILMOSOUND - 60 CYCLE

FOR USE ONLY WITH AMPLIFIER PART NO. 12814

DATE 4-7-41

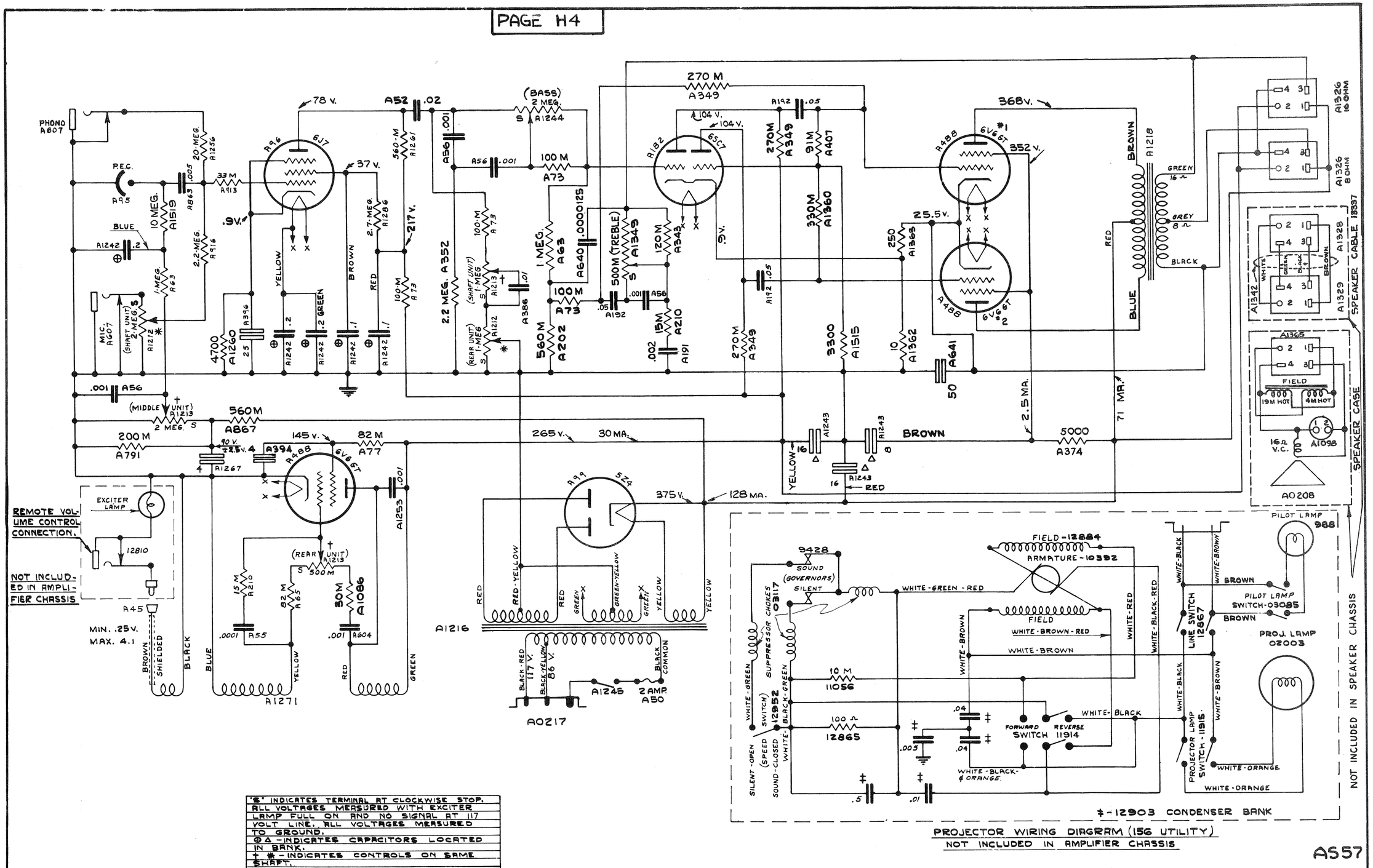

PROJECTOR WIRING DIAGRAM (156 UTILITY)
NOT INCLUDED IN AMPLIFIER CHASSIS

A557

'S' INDICATES TERMINAL AT CLOCKWISE STOP. ALL VOLTAGES MEASURED WITH EXCITER LAMP FULL ON AND NO SIGNAL AT 117 VOLT LINE. ALL VOLTAGES MEASURED TO GROUND.
⊕A - INDICATES CAPACITORS LOCATED IN BANK.
+ * - INDICATES CONTROLS ON SAME SHAFT.

WIRING COLOR CODE	
WHITE — GROUND	BROWN — SCREEN
YELLOW — CATHODE	BLUE — PLATE
RED — B+	BLACK — HEATER
GREEN — GRID	

NOTE:
FOR USE WITH AMPLIFIERS BEARING SERIAL NUMBER STARTING WITH #100,853

SERVICE DATA	
AMPLIFIER WIRING DIAGRAM	
UTILITY, ACADEMY, & COMMERCIAL DESIGN 156 FILMOSOUND 60 CYCLE	
FOR USE ONLY WITH AMPLIFIER PART NO. 12814	DATE 9-16-42

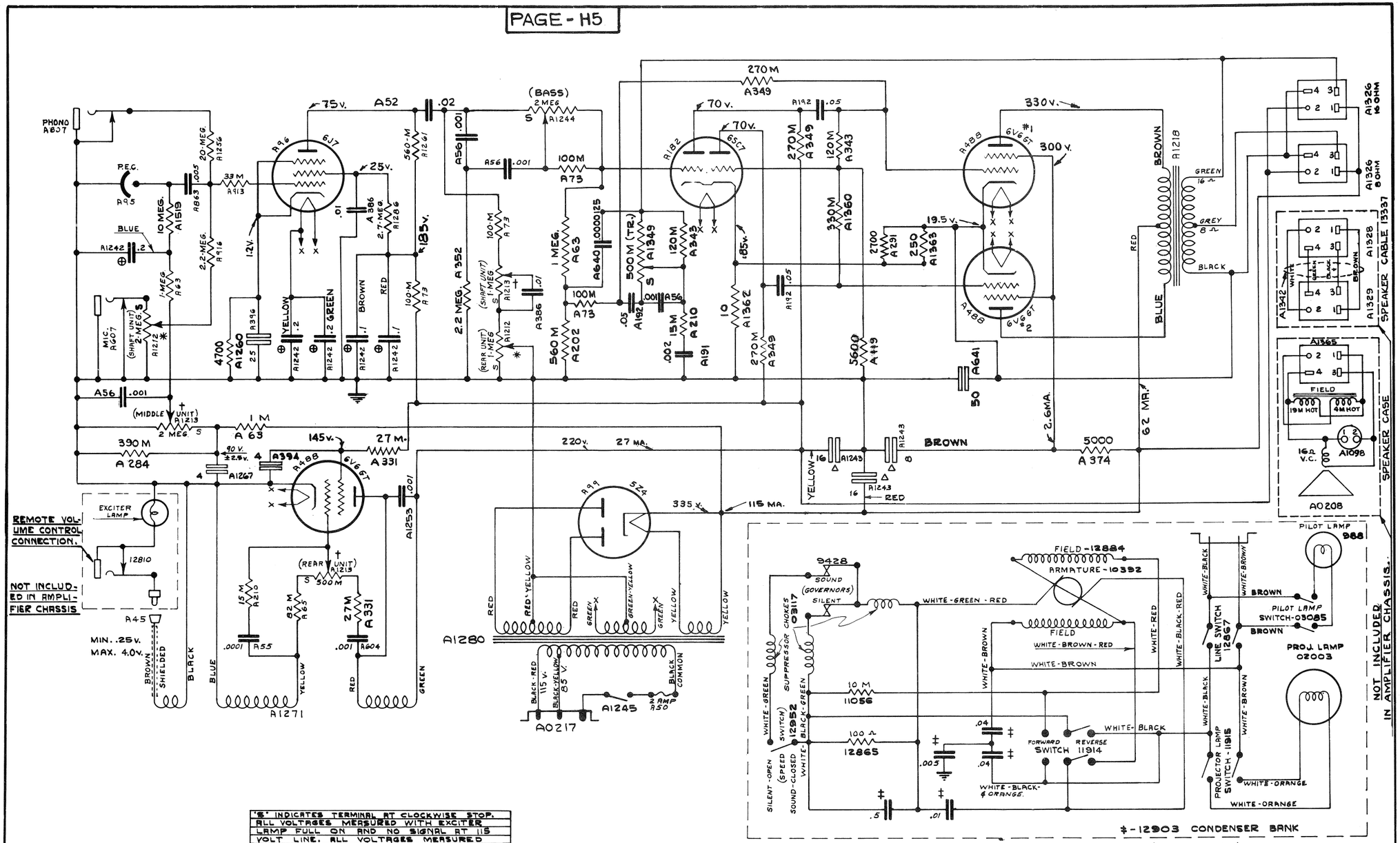

'S' INDICATES TERMINAL AT CLOCKWISE STOP.
ALL VOLTAGES MEASURED WITH EXCITER LAMP FULL ON AND NO SIGNAL AT 115 VOLT LINE. ALL VOLTAGES MEASURED TO GROUND.
⊕ Δ - INDICATES CAPACITORS LOCATED IN BANK.
+ ✱ - INDICATES CONTROLS ON SAME SHAFT.

WIRING COLOR CODE	
WHITE — GROUND	BROWN — SCREEN
YELLOW — CATHODE	BLUE — PLATE
RED — B+	BLACK — HEATER
GREEN — GRID	

RS44

SERVICE DATA

AMPLIFIER WIRING DIAGRAM

UTILITY, ACADEMY, & COMMERCIAL
DESIGN 156 FILMOSOUND - 25 CYCLE

FOR USE ONLY WITH AMPLIFIER PART NO. 12815

DATE 3-6-42

DESIGN 156, AMPLIFIER NO. 13728

This amplifier is very similar to the 12814.

It uses a 5Y3 GT rectifier and the voltages are correspondingly lower on many of the tube elements. Glass-type tubes are used throughout but the equivalent metal type may be substituted.

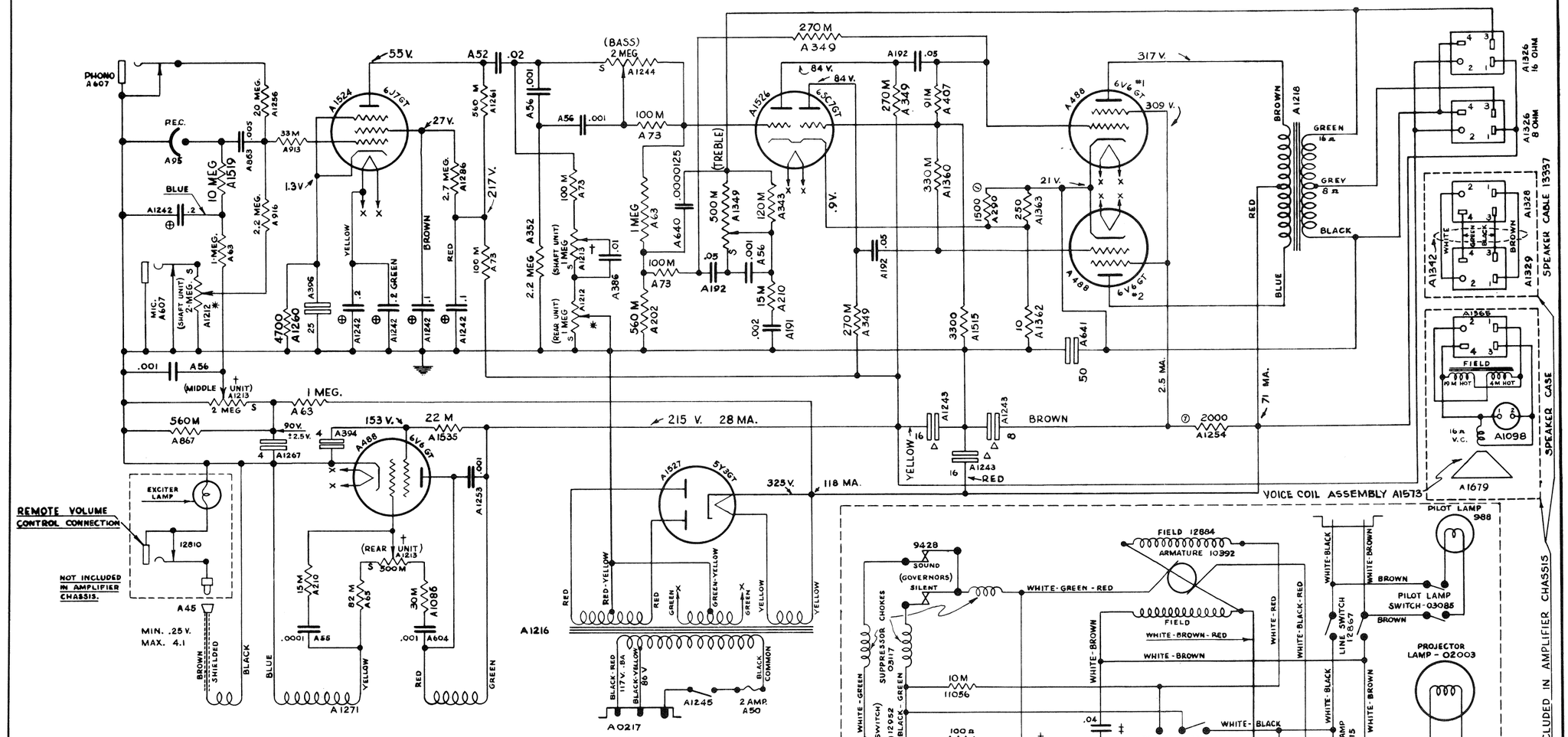

PROJECTOR WIRING DIAGRAM (156 UTILITY)
NOT INCLUDED IN AMPLIFIER CHASSIS

"S" - INDICATES TERMINAL AT CLOCKWISE STOP.
ALL VOLTAGES MEASURED WITH EXCITER LAMP FULL ON AND NO SIGNAL AT 117 VOLT LINE.
ALL VOLTAGES MEASURED TO GROUND.
⊕Δ - INDICATES CAPACITORS LOCATED IN BANK.
+✱ INDICATES CONTROLS ON SAME SHAFT.
6V6GT #1 IS TUBE LOCATED BETWEEN 6V6GT #2 AND 6SC7.
6V6GT #2 IS TUBE LOCATED AT REAR OF CHASSIS.

WIRING COLOR CODE	
WHITE — GROUND	BROWN — SCREEN
YELLOW — CATHODE	BLUE — PLATE
RED — B+	BLACK — HEATER
GREEN — GRID	

① REVISED 11-28-42

AS 64

SERVICE DATA

AMPLIFIER WIRING DIAGRAM

UTILITY, ACADEMY, & COMMERCIAL
DESIGN 156 FILMOSOUND - 60 CYCLE

FOR USE ONLY WITH AMPLIFIER PART NO. 13728

DATE 9-22-42

DESIGN 156, AMPLIFIER NO. 13817

This amplifier is used in all Model 156-V Filmosounds.

The circuits are considerably different from the preceding amplifiers of this design. Note that the gain control is in the second tube grid circuit. There is but one external input. Do not confuse jack A1546, which is a jack switch located within the amplifier, with an input jack. It is operated by means of an insulated rod A1549 when a microphone or phonograph is plugged into the input jack A1543. The purpose of the switch jack is to short out the exciter lamp. Contacts are normally open.

There is no control on the exciter lamp or P.E. voltage.

In cases of poor tone quality and instability, check choke, part number A1559. Part has the appearance of a metal-encased fixed condenser.

In the event that this amplifier lies idle for indefinite periods or is used under high humidity conditions, the photocell and associated circuits should be rewired as per amplifier, part number 14027, revised page H-16. See General Service Bulletin F-20.

Note especially that new part A1911, 240M resistor does not connect to ground but runs to the output tube cathodes.

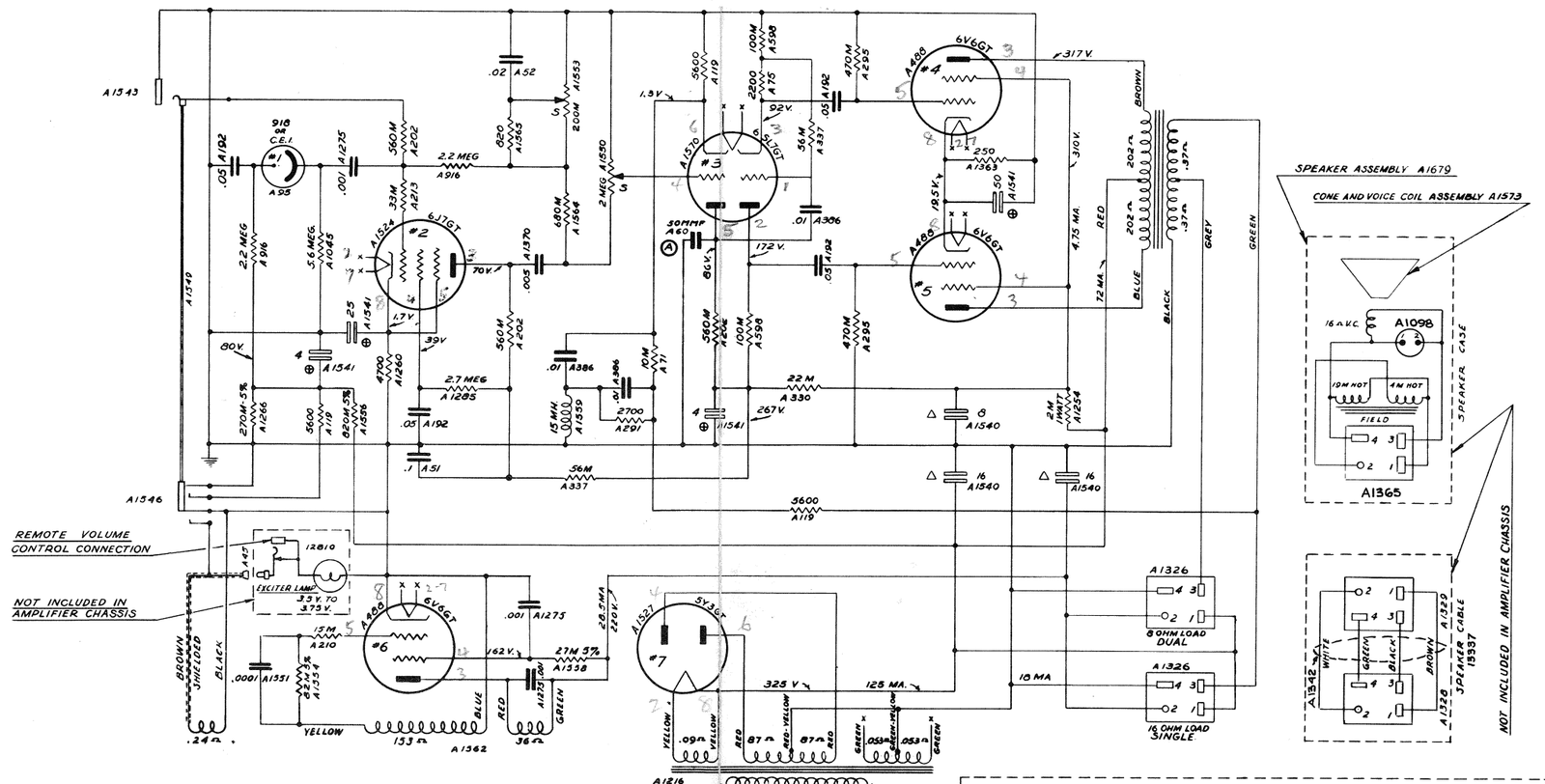

"S" INDICATES TERMINAL AT CLOCKWISE STOP. ALL VOLTAGES MEASURED WITH RESPECT TO CHASSIS AT NO SIGNAL.

● △ INDICATES CAPACITORS LOCATED IN BANK.

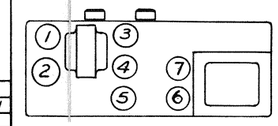

WIRING COLOR CODE	
WHITE — GROUND	BROWN — SCREEN
YELLOW — CATHODE	BLUE — PLATE
RED — B+	BLACK — HEATER
GREEN — GRID	

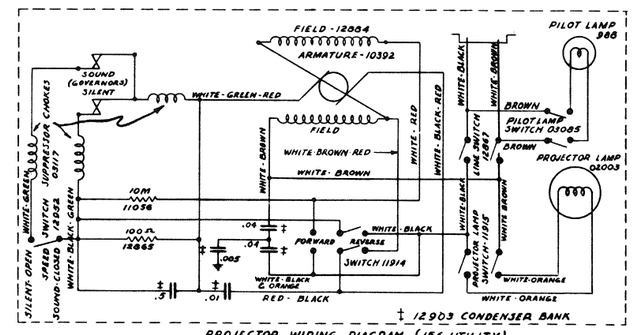

PROJECTOR WIRING DIAGRAM (156 UTILITY)
NOT INCLUDED IN AMPLIFIER CHASSIS

AS 67

SERVICE DATA	
AMPLIFIER WIRING DIAGRAM	
DESIGN 156 V. FILMOSOUND	60 CYCLE
FOR USE ONLY WITH AMPLIFIER PART NO. 13817	DATE 4-6-43

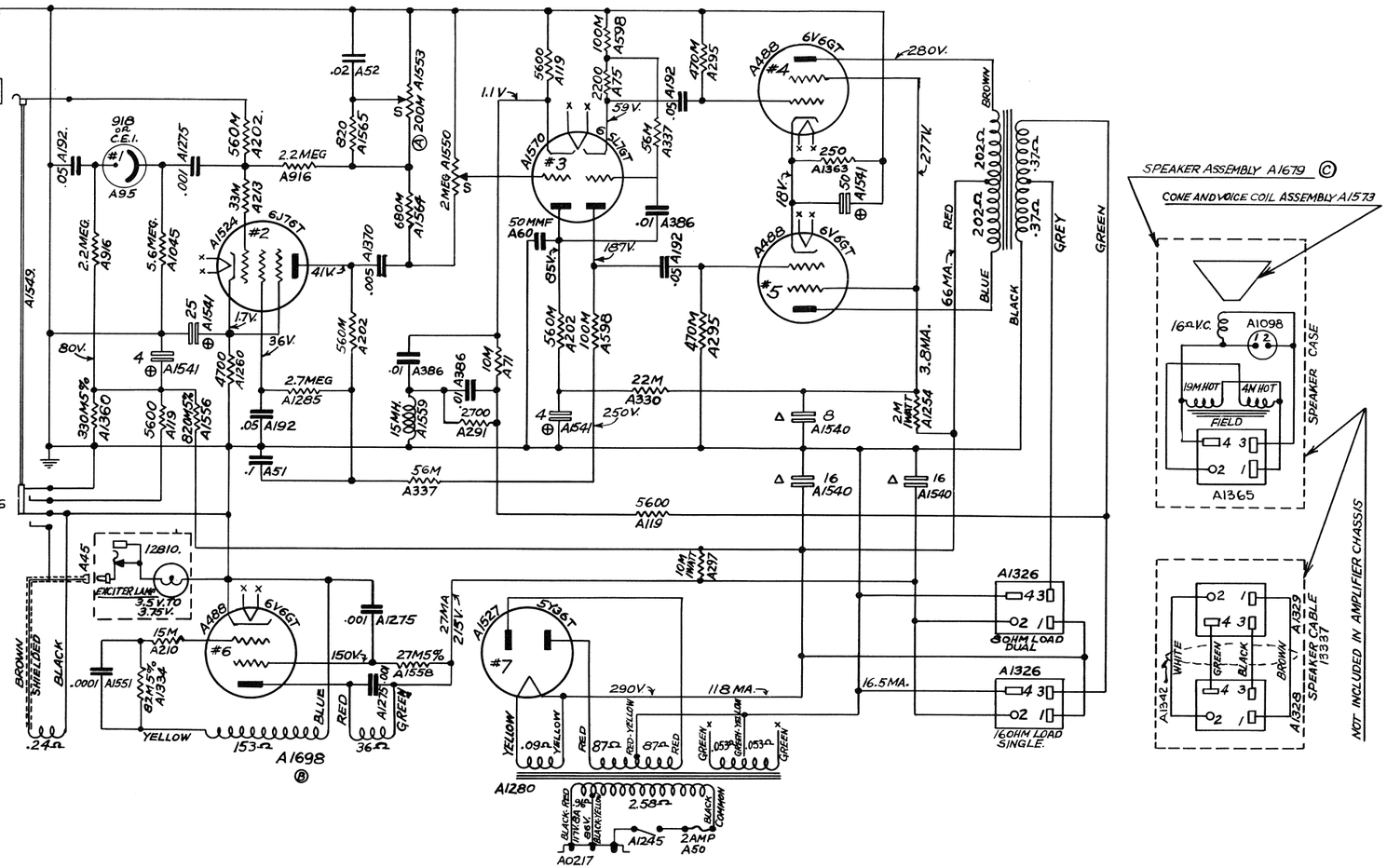

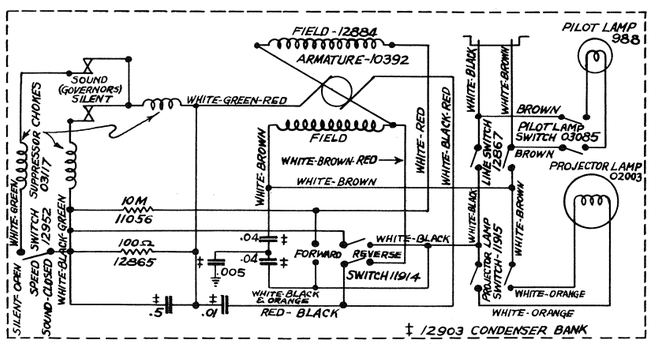

PROJECTOR WIRING DIAGRAM (156 UTILITY)
NOT INCLUDED IN AMPLIFIER CHASSIS

"S" INDICATES TERMINAL AT CLOCKWISE STOP. ALL VOLTAGES MEASURED WITH RESPECT TO CHASSIS AT NO SIGNAL.

⊕ △ INDICATES CAPACITORS LOCATED IN BANK.

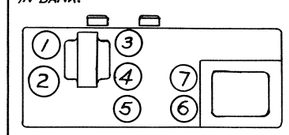

WIRING COLOR CODE	
WHITE — GROUND	BROWN — SCREEN
YELLOW — CATHODE	BLUE — PLATE
RED — B+	BLACK — HEATER
GREEN — GRID	

AS72

SERVICE DATA	
AMPLIFIER WIRING DIAGRAM	
DESIGN 156 MODEL VB 25 CYCLE	
FOR USE ONLY WITH AMPLIFIER PART Nº 13865	DATE 3-30-44.

DESIGN 156 AND 179, AMPLIFIER NO. 14027
(Amplifier serial number 100000 to 109003)

These amplifiers are similar to amplifier No. 13817. They use a permanent-magnet type of dynamic speaker.

In the event that these amplifiers lie idle for indefinite periods, which may cause the volume to be low, the photocell and associated circuits should be rewired as per General Service Bulletin F-20.

These three amplifiers are very similar. Note that the plate filter on output tubes is used only on the first of the series.

Some of these amplifiers may have the filament center tap connected to the output tube cathodes instead of direct to ground. This is to reduce hum which may be encountered when using certain makes of tubes.

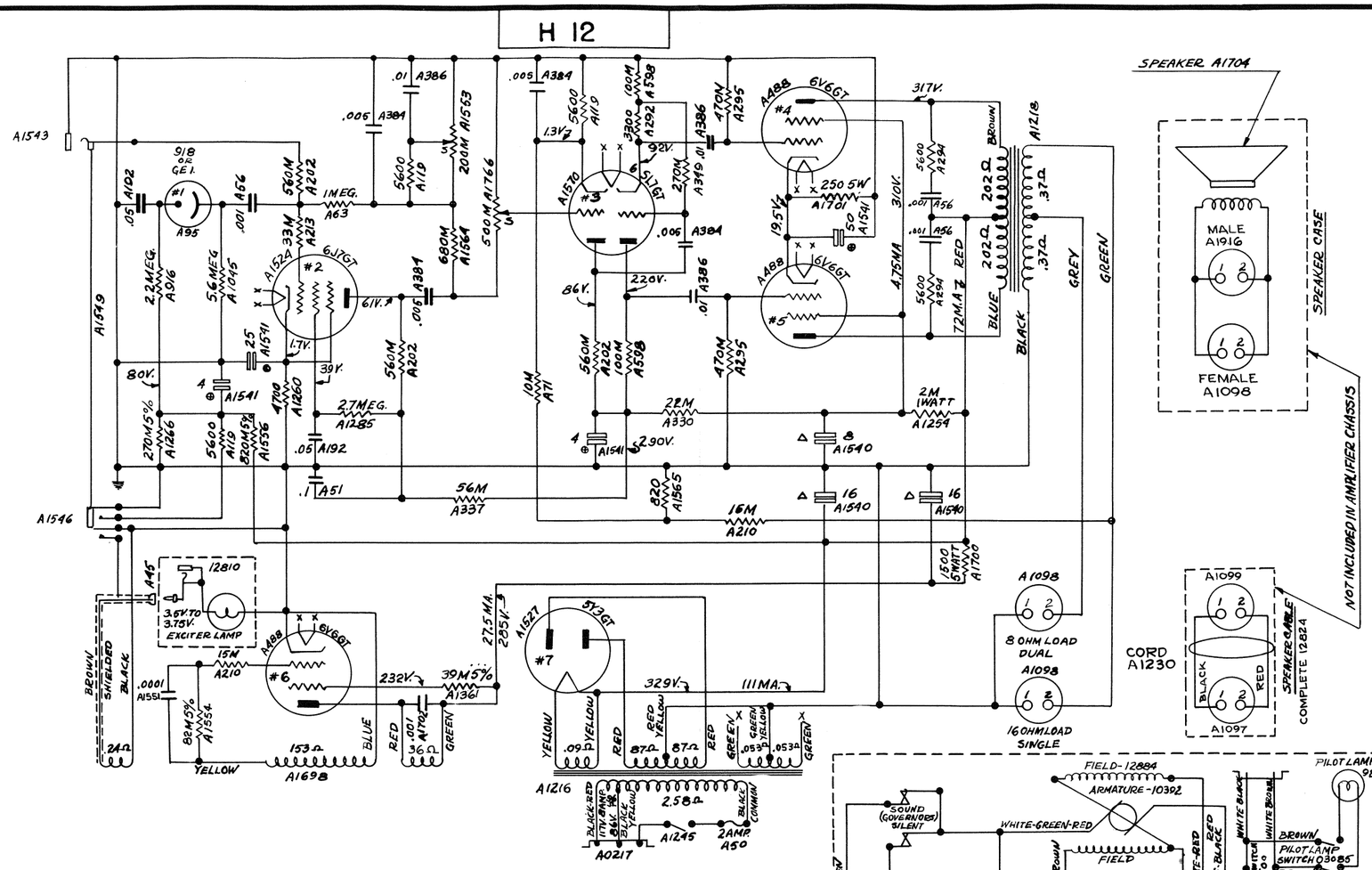

"S" INDICATES TERMINAL AT CLOCKWISE STOP. ALL VOLTAGES MEASURED WITH RESPECT TO CHASSIS AT NO SIGNAL.

⊕ △ INDICATES CAPACITORS LOCATED IN BANK.

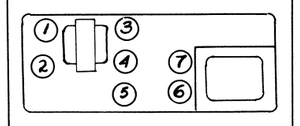

WIRING COLOR CODE	
WHITE — GROUND	BROWN — SCREEN
YELLOW — CATHODE	BLUE — PLATE
RED — B+	BLACK — HEATER
GREEN — GRID	

FOR USE WITH AMPLIFIER BEARING SERIAL NUMBERS 100,000 TO 100,600 (B&H PART No. 14027) PRIOR TO REV. 6-19-44

AS83

SERVICE DATA	
AMPLIFIER WIRING DIAGRAM	
DESIGN 156 MODELS G&H 60 CYCLES	
FOR USE ONLY WITH AMPLIFIER PART NO. 14027	DATE 4-2-46

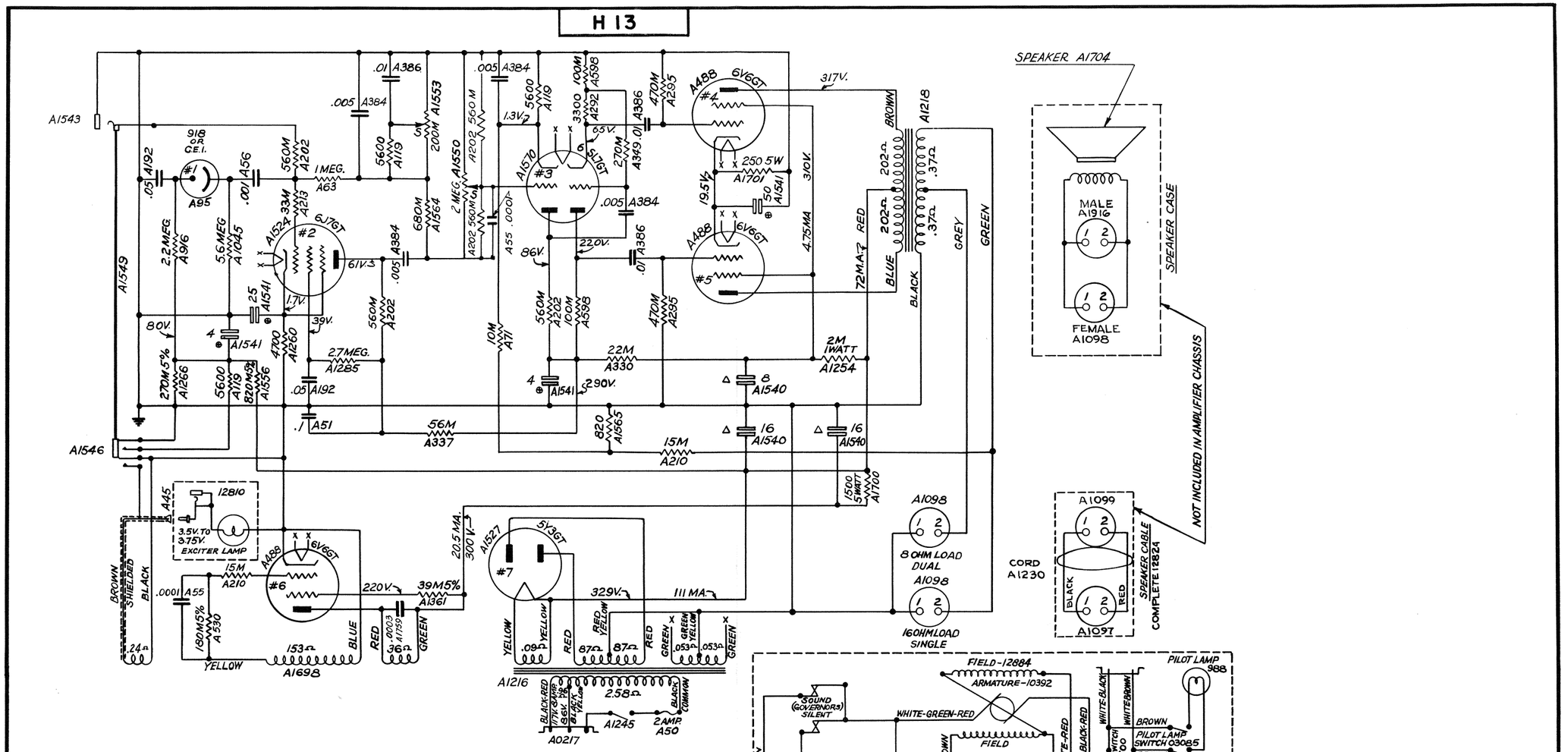

"S" INDICATES TERMINAL AT CLOCKWISE STOP. ALL VOLTAGES MEASURED WITH RESPECT TO CHASSIS AT NO SIGNAL.

⊕ △ INDICATES CAPACITORS LOCATED IN BANK.

WIRING COLOR CODE	
WHITE — GROUND	BROWN — SCREEN
YELLOW — CATHODE	BLUE — PLATE
RED — B+	BLACK — HEATER
GREEN — GRID	

TO REPLACE VOLUME CONTROL, USE A1766 - 500M AND REMOVE TWO A202 RESISTORS.

FOR USE WITH AMPLIFIERS BEARING SERIAL NUMBERS 100,600 TO 105,000 PRIOR TO REV. 6-19-44

(B & H PART Nº 14027)

A583

SERVICE DATA	
AMPLIFIER WIRING DIAGRAM	
DESIGN 156 MODELS G&H 60 CYCLE	
FOR USE ONLY WITH AMPLIFIER PART Nº 14027	DATE 6-5-44.

REVISED 10-11-44
REVISED 8-28-44
REVISED 6-19-44

H 14

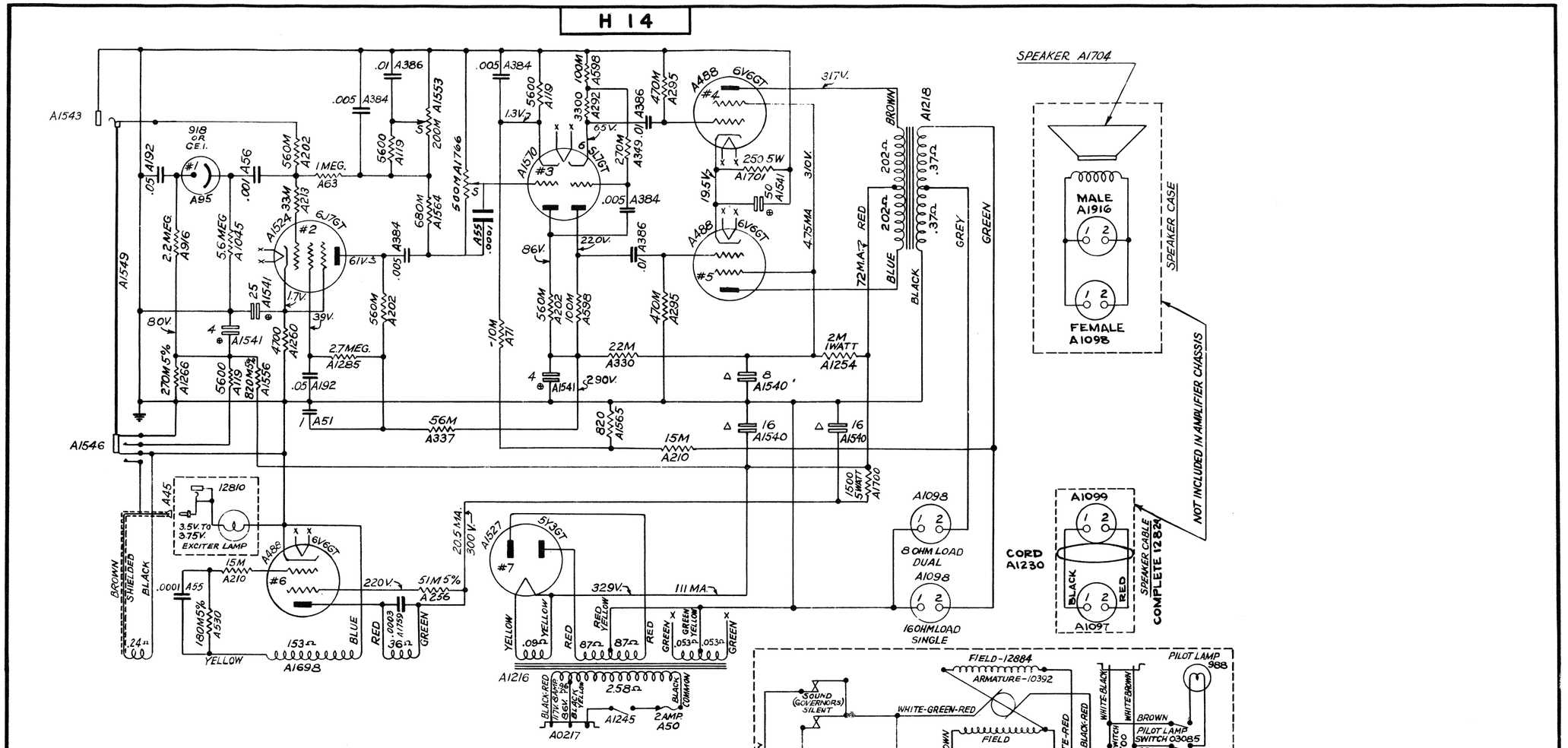

"S" INDICATES TERMINAL AT CLOCKWISE STOP. ALL VOLTAGES MEASURED WITH RESPECT TO CHASSIS AT NO SIGNAL.

⊕ Δ INDICATES CAPACITORS LOCATED IN BANK.

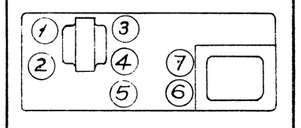

WIRING COLOR CODE	
WHITE — GROUND	BROWN — SCREEN
YELLOW — CATHODE	BLUE — PLATE
RED — B+	BLACK — HEATER
GREEN — GRID	

FOR USE WITH AMPLIFIER BEARING SERIAL NUMBERS 105,000 TO 109,003

(B&H PART Nº 14027)

PRIOR TO REV. 6-19-44

AS83

REVISED 1-12-45	SERVICE DATA
REVISED 10-11-44	AMPLIFIER WIRING DIAGRAM
REVISED 8-28-44	DESIGN 156 MODELS G&H 60 CYCLE
REVISED 6-19-44	FOR USE ONLY WITH AMPLIFIER PART Nº 14027 — DATE 6-5-44.

DESIGN 179, AMPLIFIER NO. 14027 (Revised)
(Amplifier serial numbers 109003 to 110002, and 114003 and up)

Several changes have been made in this amplifier as compared to other 14027 types. The volume control value is different. Most notable of all is the complete change in method of tone control. Note also that the filament winding center tap does not run to ground but is connected to the output tube cathodes. This brings all heaters above ground, the purpose of which is to reduce hum when certain makes of tubes are used.

CAUTION

Read all notes before starting work. Do not scale drawing.
Work to dimensions. All dimensions are given in inches.
Unless otherwise specified chapter all shaft currents (1925x45).
Unless otherwise specified fractional dimensions are ±
Unless otherwise specified, angular dimensions are ±
Substitutions must be approved by the Engineering Dept.

H 16

AS-87

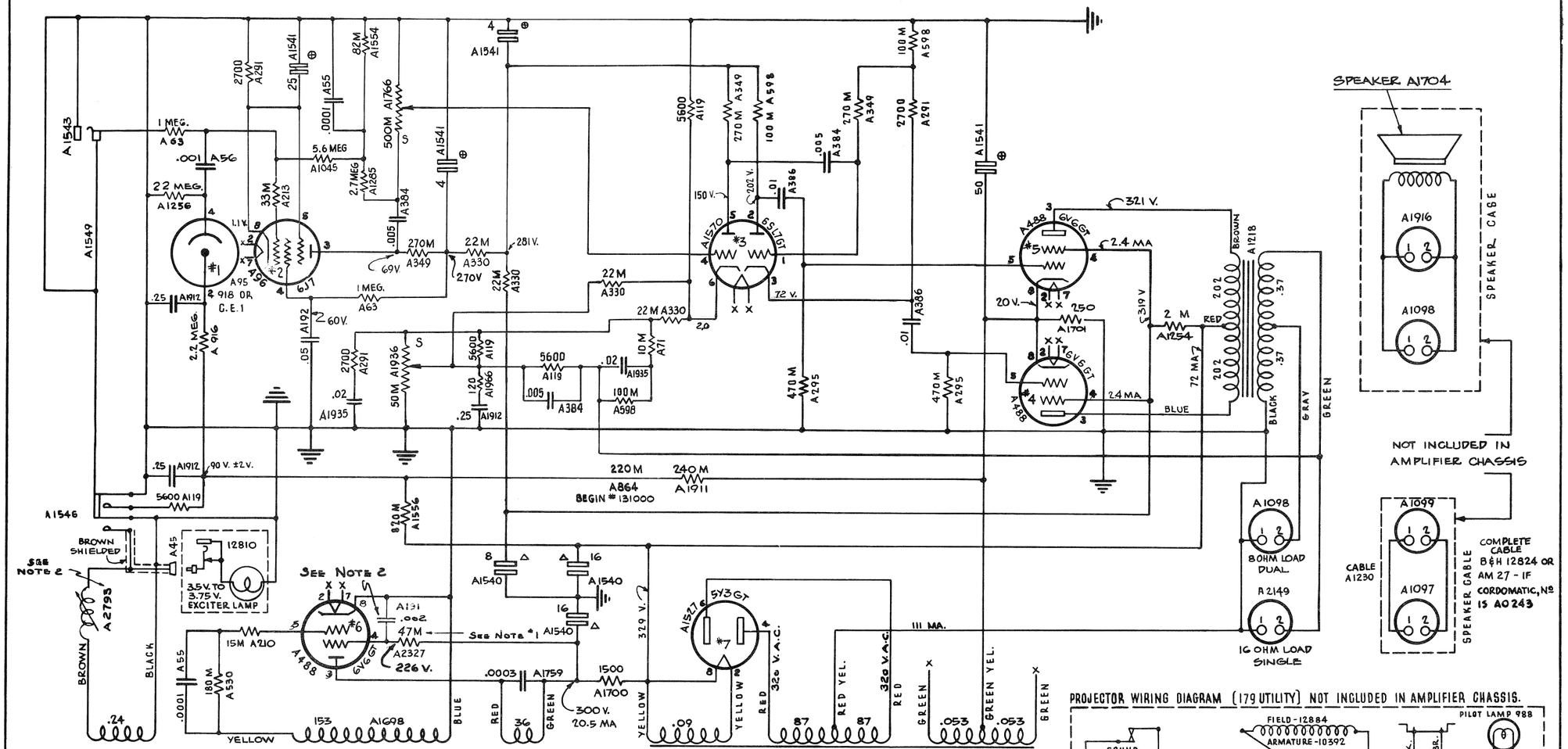

NOTES

1. RESISTOR MAY BE MODIFIED TO ALLOW FOR OUTPUT VOLTAGE VARIATIONS IN TRANSFORMER.
2. VARIABLE REACTOR A-2793 & CAPACITOR A-191 NOTED ARE USED IN ALL AMPLIFIERS AFTER 146704.
3. JACK 12810 HAS BEEN REMOVED.
4. D.C. VOLTAGES TAKEN WITH 20000 OHMS PER VOLT METER & A.C. VOLTAGES TAKEN WITH 1000 OHMS PER VOLT METER READINGS ARE NOT CORRECTED FOR SHUNTING EFFECT.

WIRING COLOR CODE	
WHITE-GROUND	BROWN-SCREEN
YELLOW-CATHODE	BLUE-PLATE
RED-B+	BLACK-HEATER
GREEN-GRID	

*S" INDICATES TERMINAL AT CLOCK-WISE STOP ALL VOLTAGE MEASURED WITH RESPECT TO CHASSIS AND TONE CONTROL BASS

⊕△ INDICATES CAPACITORS IN BANK.

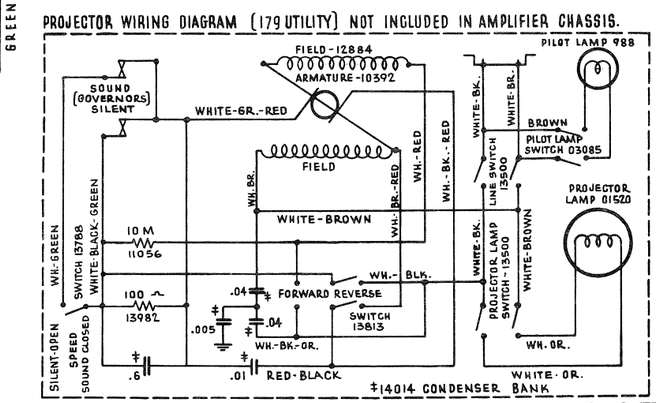

AS-87

FOR USE WITH AMPLIFIERS BEARING SERIAL NUMBERS 109003 TO 110002 & 114003 UP

SERVICE DATA	
AMPLIFIER WIRING DIAGRAM	
DESIGN 179 MODEL A - 60 CYCLE	
FOR USE ONLY WITH AMPLIFIER PART Nº 14027	12-15-45

H17

A5-88

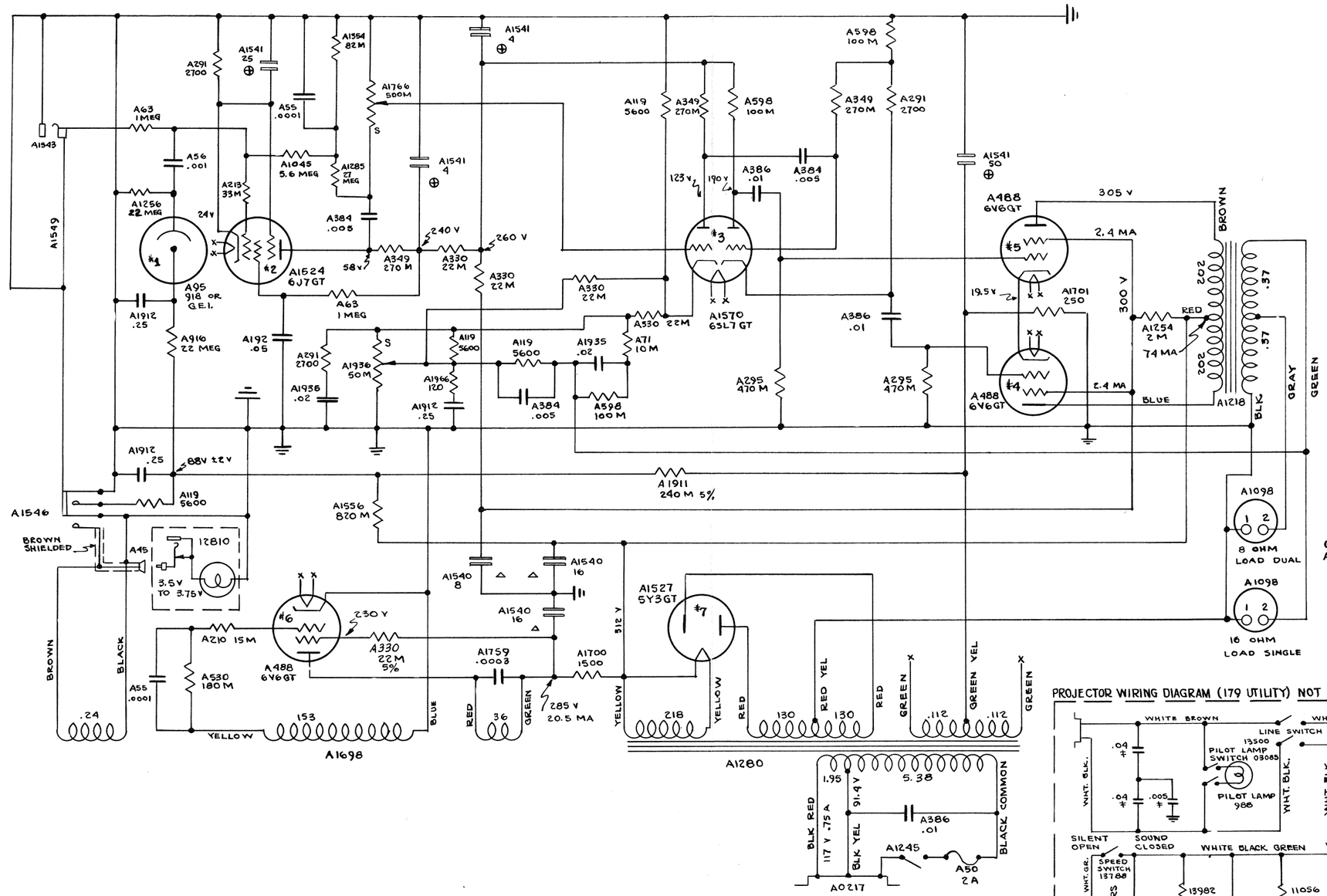

PROJECTOR WIRING DIAGRAM (179 UTILITY) NOT INCLUDED IN AMPLIFIER CHASSIS

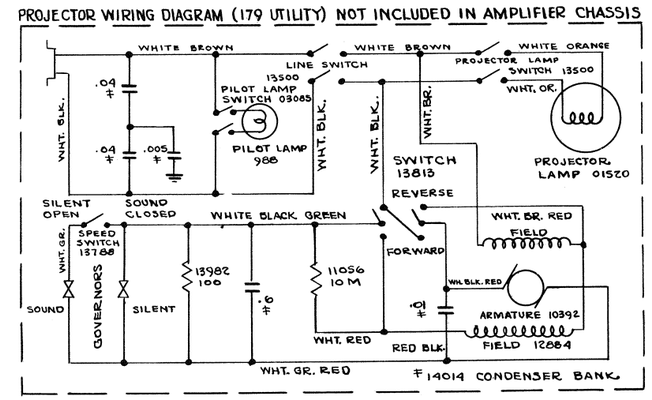

WIRING COLOR CODE	
WHITE - GROUND	BROWN - SCREEN
YELLOW - CATHODE	BLUE - PLATE
RED - B+	BLACK - HEATER
GREEN - GRID	

"S" INDICATES TERMINAL AT CLOCKWISE STOP ALL VOLTAGES MEASURED WITH RESPECT TO CHASSIS & TONE CONTROL BASS.
⊕ △ INDICATE CAPACITORS IN BANK.

① ② ③ ④ ⑤ ⑥ ⑦

A5-88

SERVICE DATA	
AMPLIFIER WIRING DIAGRAM	
FILMOSOUND	
DESIGN 179 AB	MODEL AB
FOR USE ONLY WITH PART NO. 14100	DATE 10-19-45

DESIGN 179, AMPLIFIER NO. 05311

This amplifier is a rather radical departure from any past Bell & Howell amplifier. It is not an AC-DC amplifier.

The power output is 10 watts maximum - 8 watts minimum.

In order to reduce weight, the power transformer has been eliminated.

Two selenium dry disc rectifiers connected in a voltage doubler circuit supply the high voltage DC for the tubes.

Tube filaments are series connected across the line.

The sound-silent projector switch partially shorts the exciter lamp when operating projector at silent speed.

An isolation transformer is used in the phono-microphone input circuit.

A .1 mfd condenser, part #17030, is connected from line to chassis to reduce motor crackle. In the event of shock complaint, the condenser should be changed to .03. It may, however, reduce the amplifier sensitivity. This condenser must be moulded plastic or metal encased. Aerovox Duranite 600 Volt .033 MFD may be used.

Complaints of noise, static, etc. are usually caused by a damaged photocell cover, part #06543. A sharp blow against the cover will loosen the angle bracket bond to cover. They cannot be repaired except at the factory. It is suggested that each Service Station have two covers in stock. The damaged cover may be returned for repair.

A loose PEC socket will also cause noise. Tighten by soldering locking ring to chassis.

Loss of volume (sudden) and sometimes noise are usually caused by electrolytic condenser (rear) having been hit, so that grounding ring on condenser is loose. Change condenser to repair.

Low volume is usually corrected by changing or interchanging 25L6G tubes.

H 19

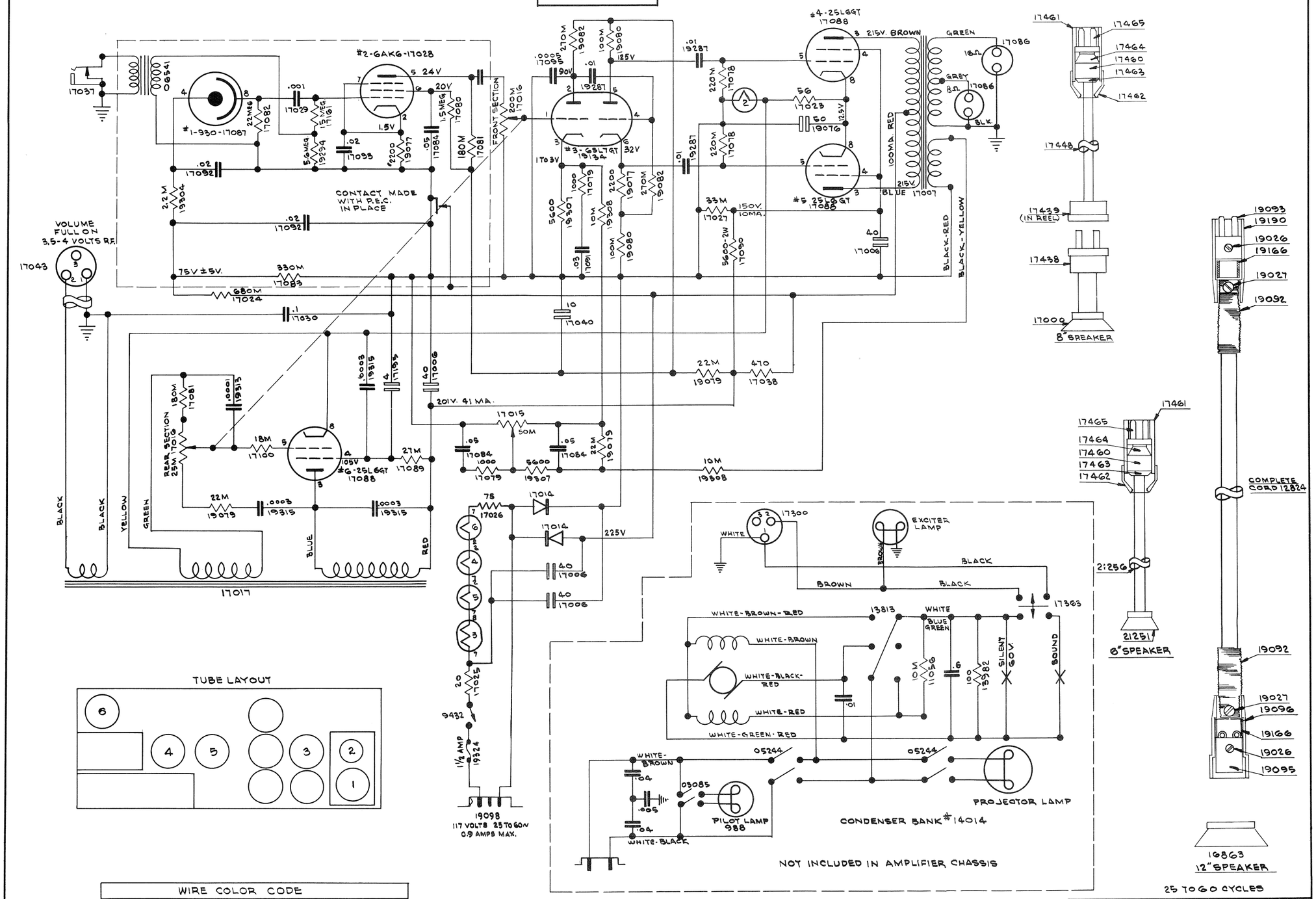

WIRE COLOR CODE			
WHITE	GROUND	BROWN	SCREEN
YELLOW	CATHODE	BLACK	AC
RED	B+	WHITE & BLACK	B-
GREEN	GRID		
BLUE	PLATE		

ALL VOLTAGES MEASURED WITH METER WITH 11 MEGOHM INPUT.

Bell & Howell Co. Chicago U.S.A.

AMPLIFIER WIRING DIAGRAM 05311
FOR DESIGNS 179 H, J, K-

DATE 1-27-49	SERVICE DATA	DRAWN E.G.O. APVD. E.A.

H 20

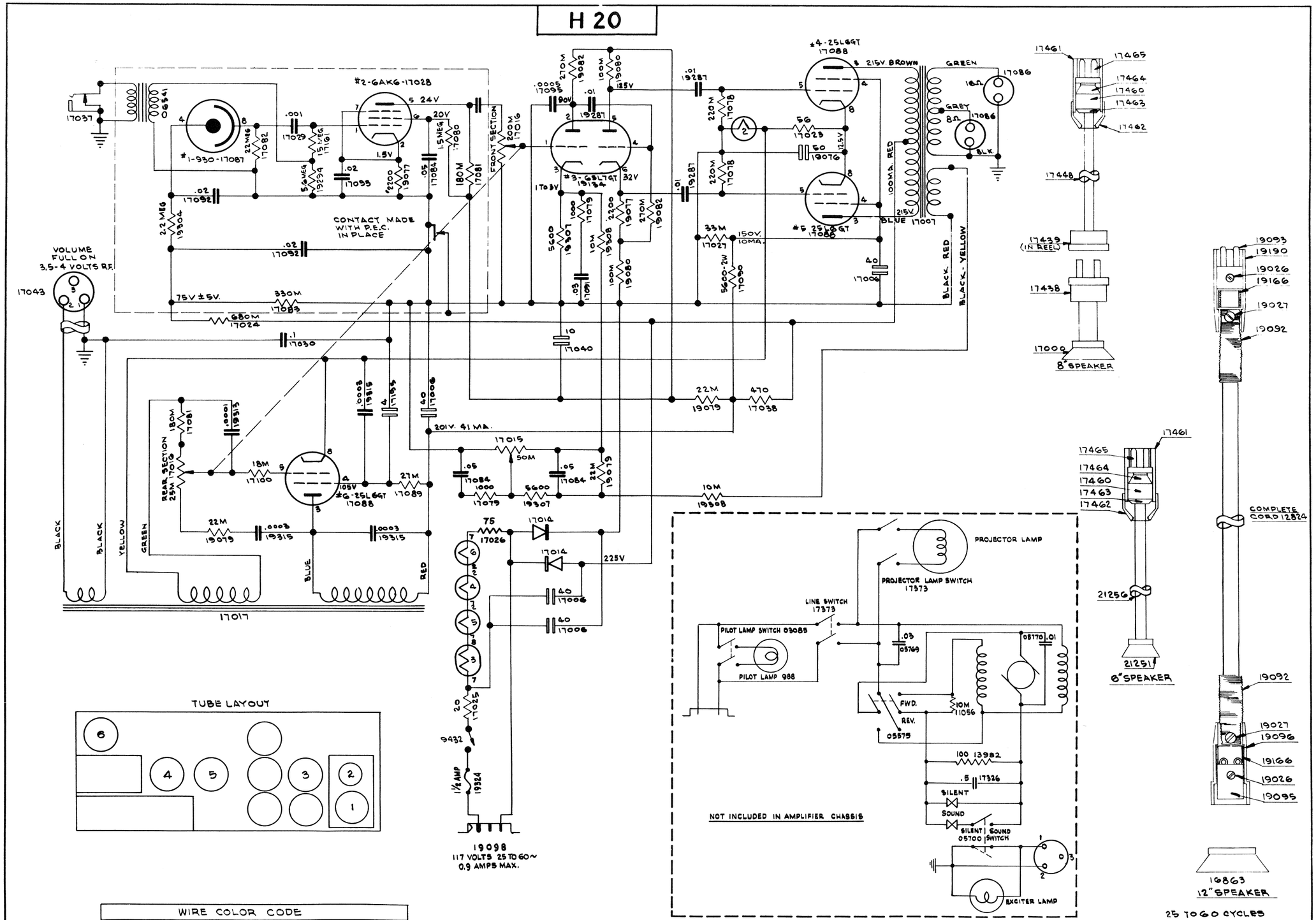

WIRE COLOR CODE			
WHITE	GROUND	BROWN	SCREEN
YELLOW	CATHODE	BLACK	AC
RED	B+	WHITE & BLACK	B-
GREEN	GRID		
BLUE	PLATE		

ALL VOLTAGES MEASURED WITH METER WITH 11 MEGOHM INPUT.

Bell & Howell Co. Chicago U.S.A.

AMPLIFIER WIRING DIAGRAM 05311
FOR DESIGNS 185 (ALL)

DATE 1-27-49	SERVICE DATA	DRAWN E.G.C. APVD.

H-21

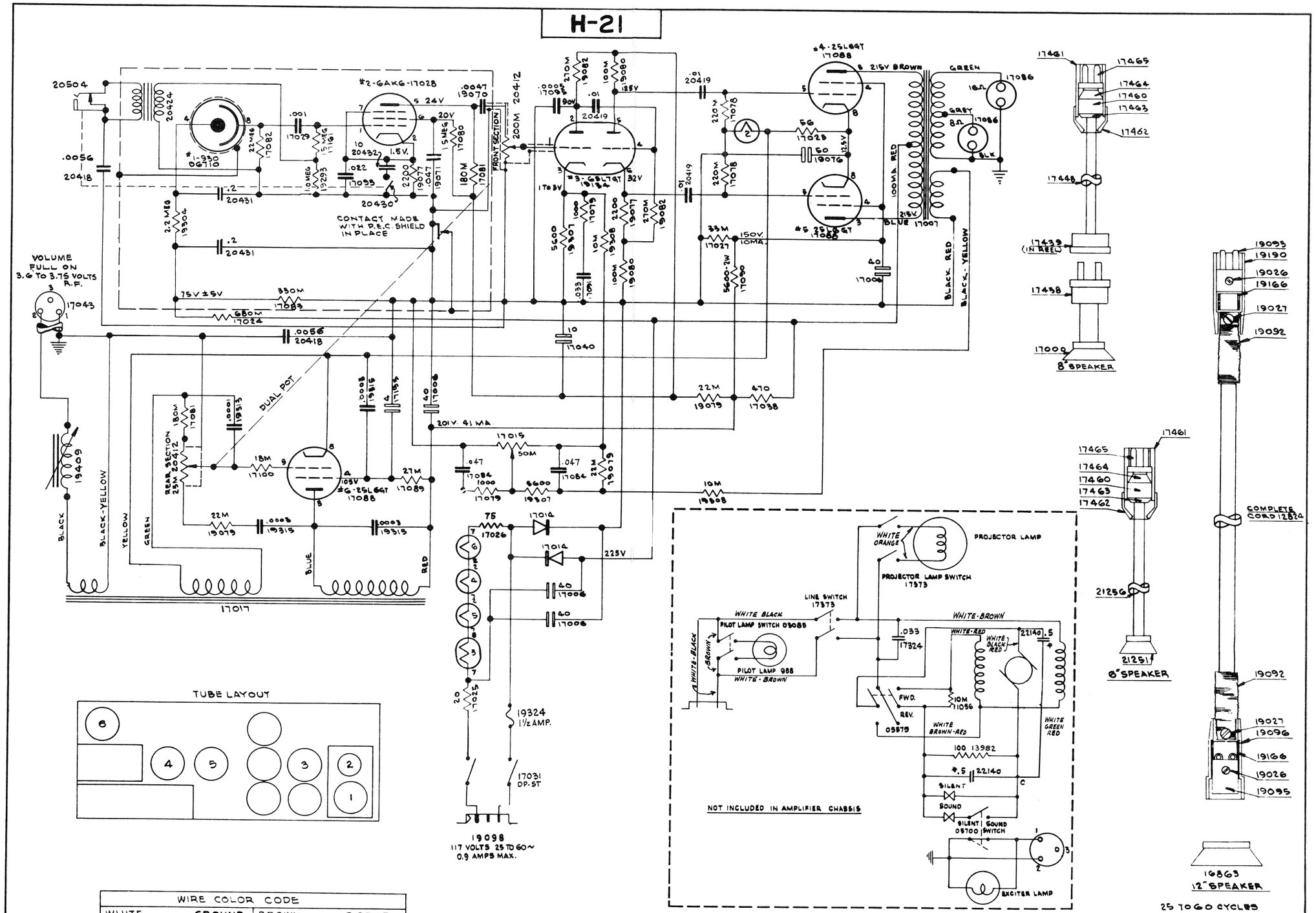

TUBE LAYOUT

WIRE COLOR CODE			
WHITE	GROUND	BROWN	SCREEN
YELLOW	CATHODE	BLACK	AC
RED	B+	WHITE & BLACK	B-
GREEN	GRID		
BLUE	PLATE		

ALL VOLTAGES MEASURED WITH METER
WITH 11 MEGOHM INPUT.

F.O.S. SERIAL 721173 TO 767267

Bell & Howell Co. Chicago U.S.A.

AMPLIFIER WIRING DIAGRAM 05973
FOR DESIGNS 185 (ALL)

DATE 8-11-50 | SERVICE DATA | DRAWN F.O.P. APVD.

H-22

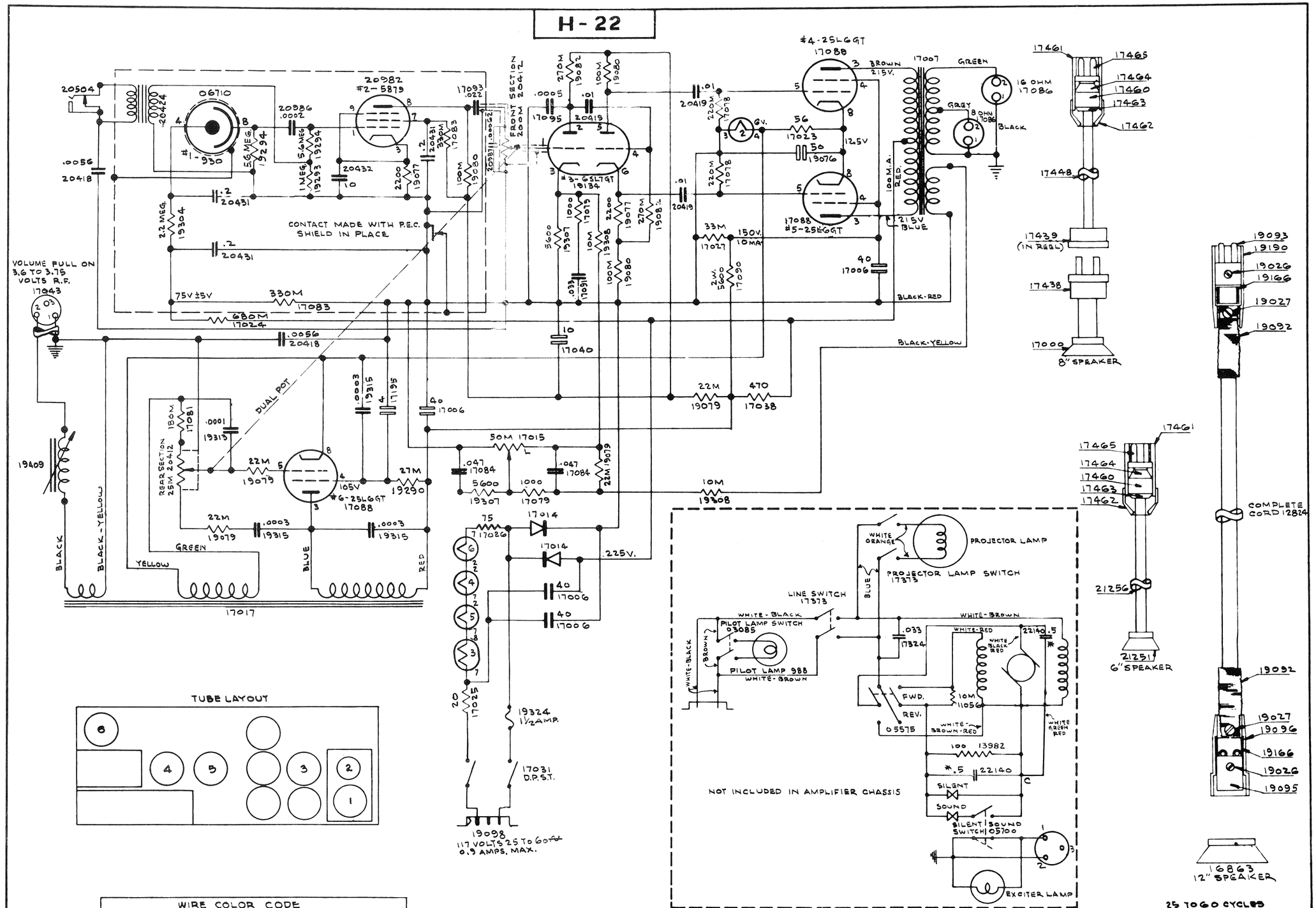

WIRE COLOR CODE			
WHITE	GROUND	BROWN	SCREEN
YELLOW	CATHODE	BLACK	AC
RED	B+	WHITE & BLACK	B-
GREEN	GRID		
BLUE	PLATE		

ALL VOLTAGES MEASURED WITH METER WITH 11 MEGOHM INPUT.

F.O.S. SERIAL NO'S. 767267 & UP

REVISION OF OCTOBER 1950

Bell & Howell Co. Chicago U.S.A.

AMPLIFIER WIRING DIAGRAM 05973
FOR DESIGNS 185 (ALL)

DATE 6-20-51	SERVICE DATA	DRAWN E.O.P. APVD.

H-23 SHEET A

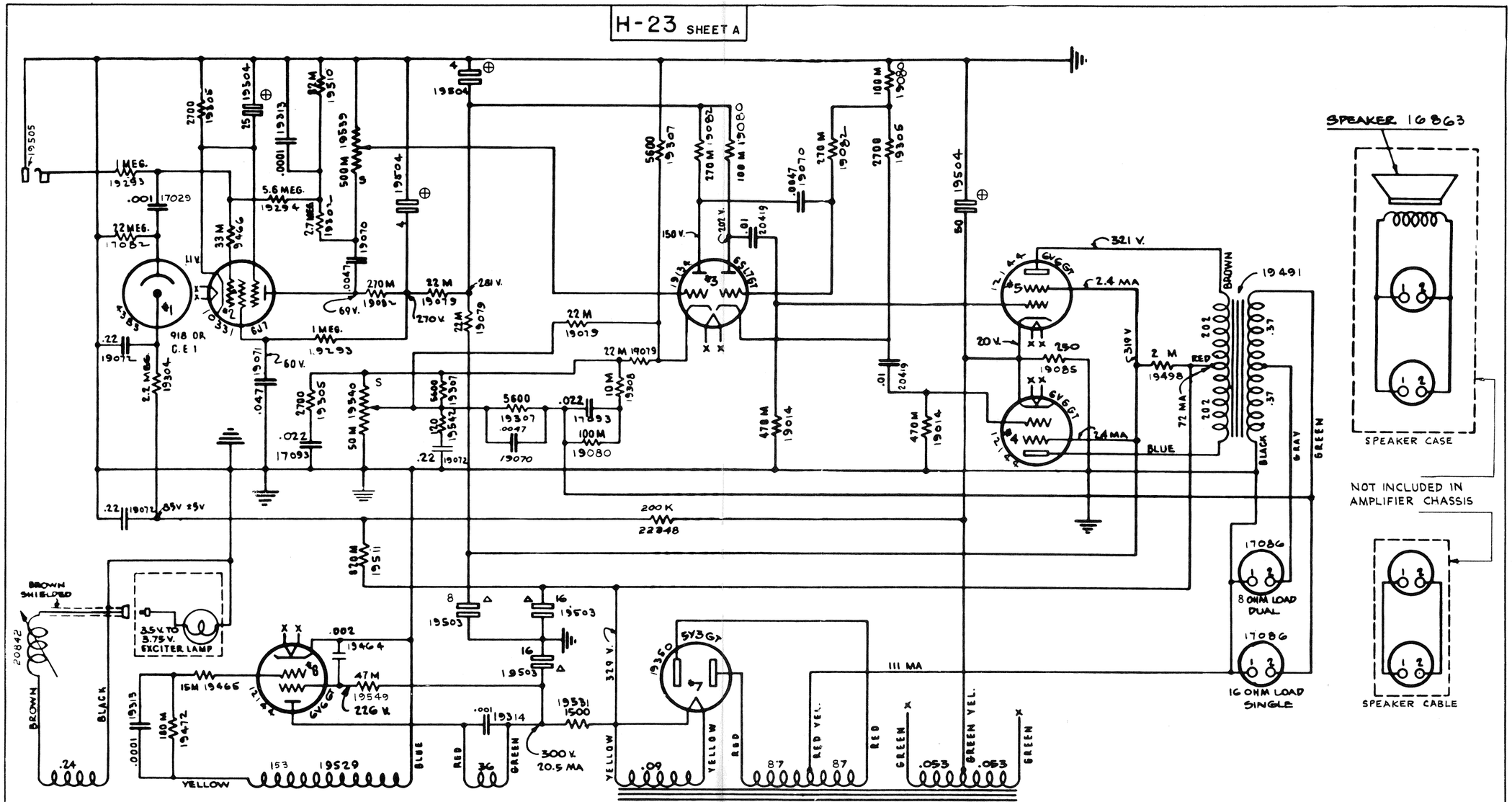

FREQUENCY RESPONSE (DB±1)			
INPUT SIGNAL APPLIED THRU 20 MEGS TO P.E.C. CATHODE VOL. CONTROL ON FULL			
TONE CONTROL POSITION	⊘	⊘	⊘
INPUT VOLTAGE	.050	.050	.050
FREQUENCY	DB	DB	DB
50	-16.0	-12.0	-1.0
100	-15.0	-11.5	-0.0
500	-7.5	-7.5	-3.5
1000	-4.5	-6.0	-4.0
3000	-1.5	-5.0	-3.5
5000	-2.5	-5.0	-4.0
7000	-4.5	-6.0	-5.0
10,000	-7.0	-8.5	-7.0

SENSITIVITY

MEASURED AT 6 WATT OUTPUT AT 1000 CYCLES. TONE CONTROL BASS. VOLUME CONTROL SET AT MAXIMUM

MICROPHONE INPUT: 0.013 VOLTS APPLIED DIRECTLY TO MIKE JACK

FILM INPUT CHANNEL: 0.120 VOLTS APPLIED THRU 20 MEGS TO P.E.C. CATHODE

POWER OUTPUT AT 5% DISTORTION

LINE VOLTS	FREQUENCY	WATTS	TOLERANCE
117	400	12.0	±12%

MEASURED WITH VOLUME CONTROL AT MAXIMUM AND TONE CONTROL BASS RESISTANCE OUTPUT LOAD.

ALL MEASUREMENTS MADE WITH 117 VOLT A.C. 60 CYCLE LINE.

WIRING COLOR CODE	
WHITE-GROUND	BROWN-SCREEN
YELLOW-CATHODE	BLUE-PLATE
RED-B+	BLACK-HEATER
GREEN-GRID	

"S" INDICATES TERMINAL AT CLOCKWISE STOP. ALL VOLTAGES MEASURED WITH RESPECT TO CHASSIS AND TONE CONTROL BASS.

⊕△ INDICATES CAPACITORS IN BANK.

WIRE COLOR CODE			
WHITE	GROUND	BLUE	PLATE
YELLOW	CATHODE	BROWN	SCREEN
RED	B+	BLACK	AC
GREEN	GRID	BLACK & WHITE	B-

50 TO 60 CYCLES

Bell & Howell Co. Chicago U.S.A.

14W AMPLIFIER WIRING DIAGRAM FOR DESIGNS 185 (ALL) (06580)

DATE 3-6-52	SERVICE DATA	DRAWN acl APVD.

H-23 SHEET-B

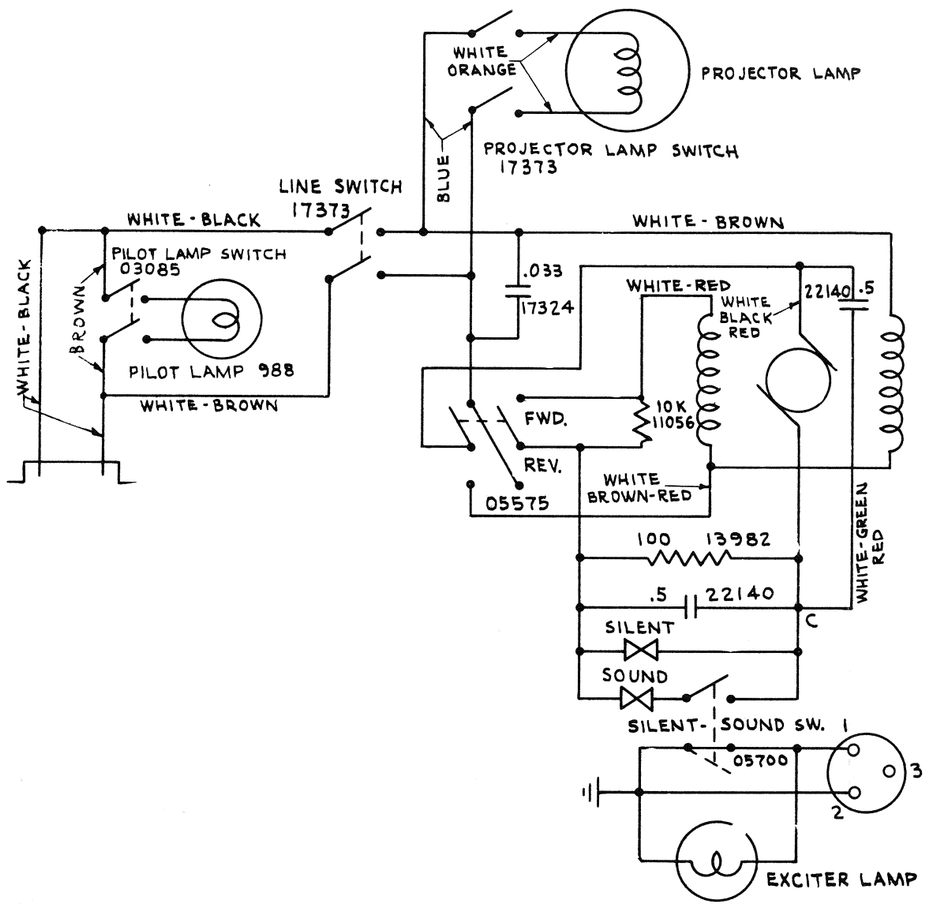

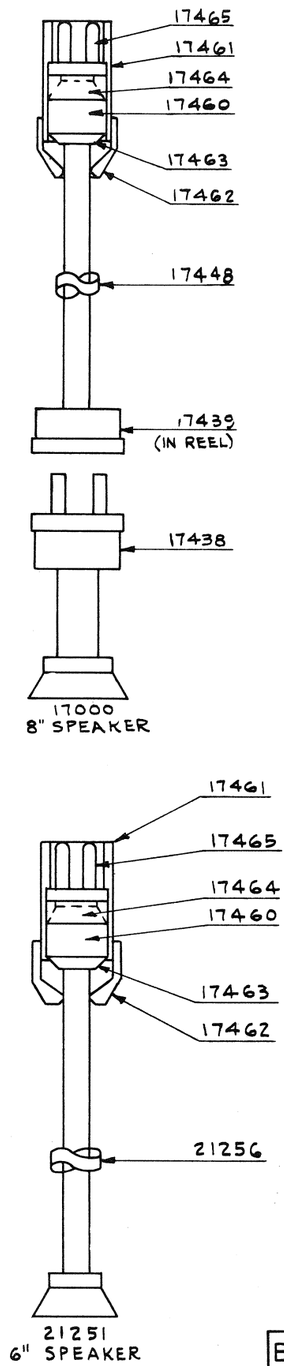

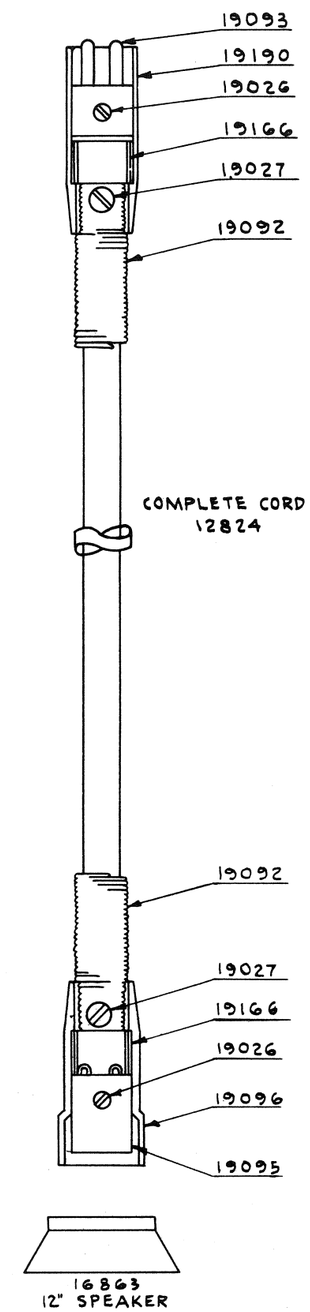

PARTS ON THIS SHEET NOT INCLUDED IN AMPLIFIER CHASSIS

Bell & Howell Co. Chicago U.S.A.		
PROJECTOR WIRING DIAGRAM & CABLES FOR DESIGNS 185 (ALL)		
DATE 3-3-52	SERVICE DATA	DRAWN acl APVD.

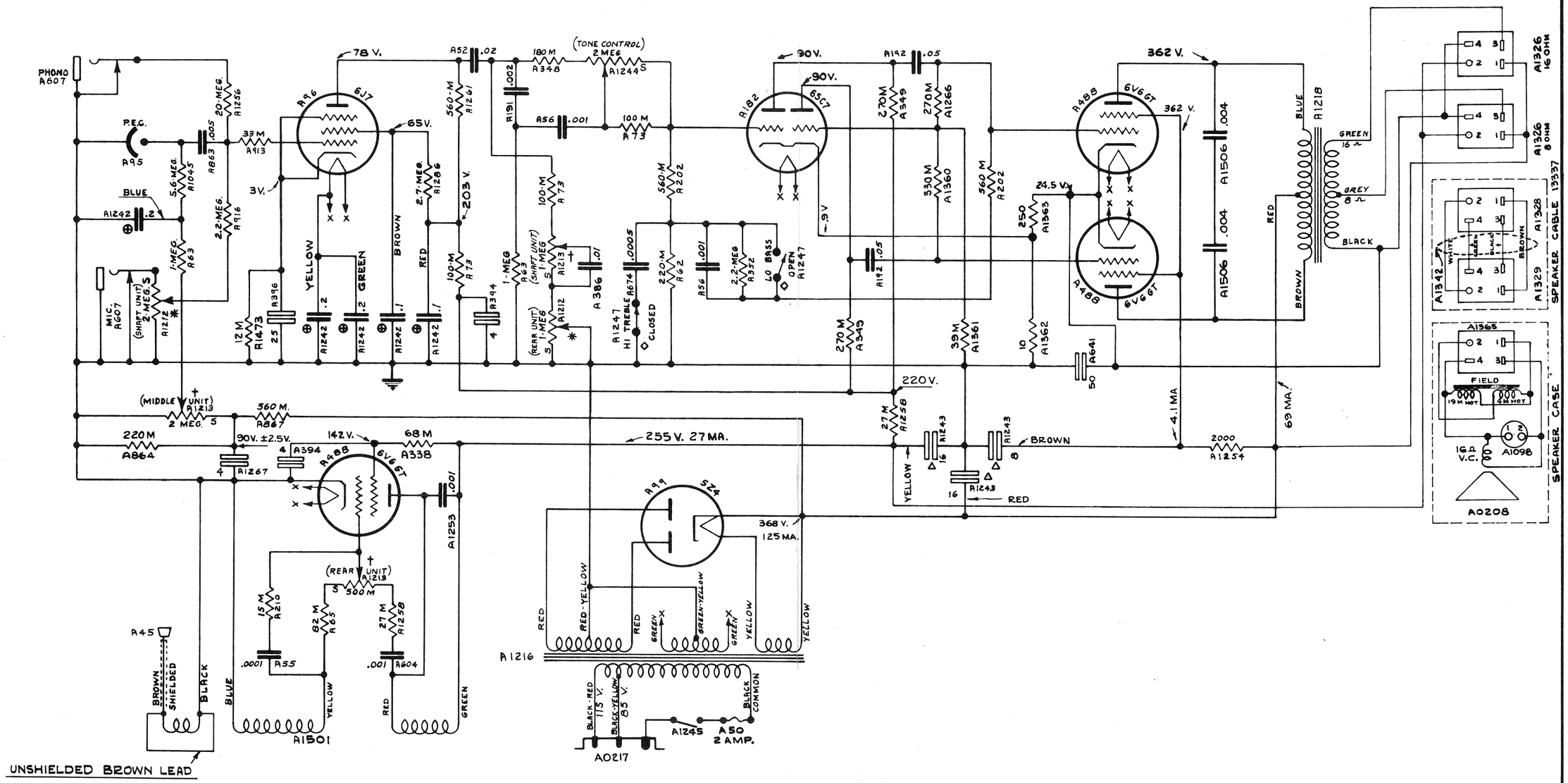

'S' INDICATES TERMINAL AT CLOCKWISE STOP. ALL VOLTAGES MEASURED WITH EXCITER LAMP FULL ON AND NO SIGNAL AT 115 VOLT LINE. ALL VOLTAGES MEASURED TO GROUND.			
⊕ △ INDICATES CAPACITORS LOCATED IN BANK.			
+ ✱ INDICATES CONTROLS ON SAME SHAFT.			
◇ SWITCHES SHOWN WITH SLIDE BUTTONS IN DOWN POSITION.			
WIRING COLOR CODE			
WHITE	GROUND	BROWN	SCREEN
YELLOW	CATHODE	BLUE	PLATE
RED	B+	BLACK	HEATER
GREEN	GRID		

AS55

SERVICE DATA

AMPLIFIER WIRING DIAGRAM

B. & H. PORTABLE SOUND SYSTEM
DESIGN #159 MODEL A

FOR USE ONLY WITH AMPLIFIER PART NO. #12814 SUPPLIED WITH ABOVE. 12·8·41

K-3 SHEET A

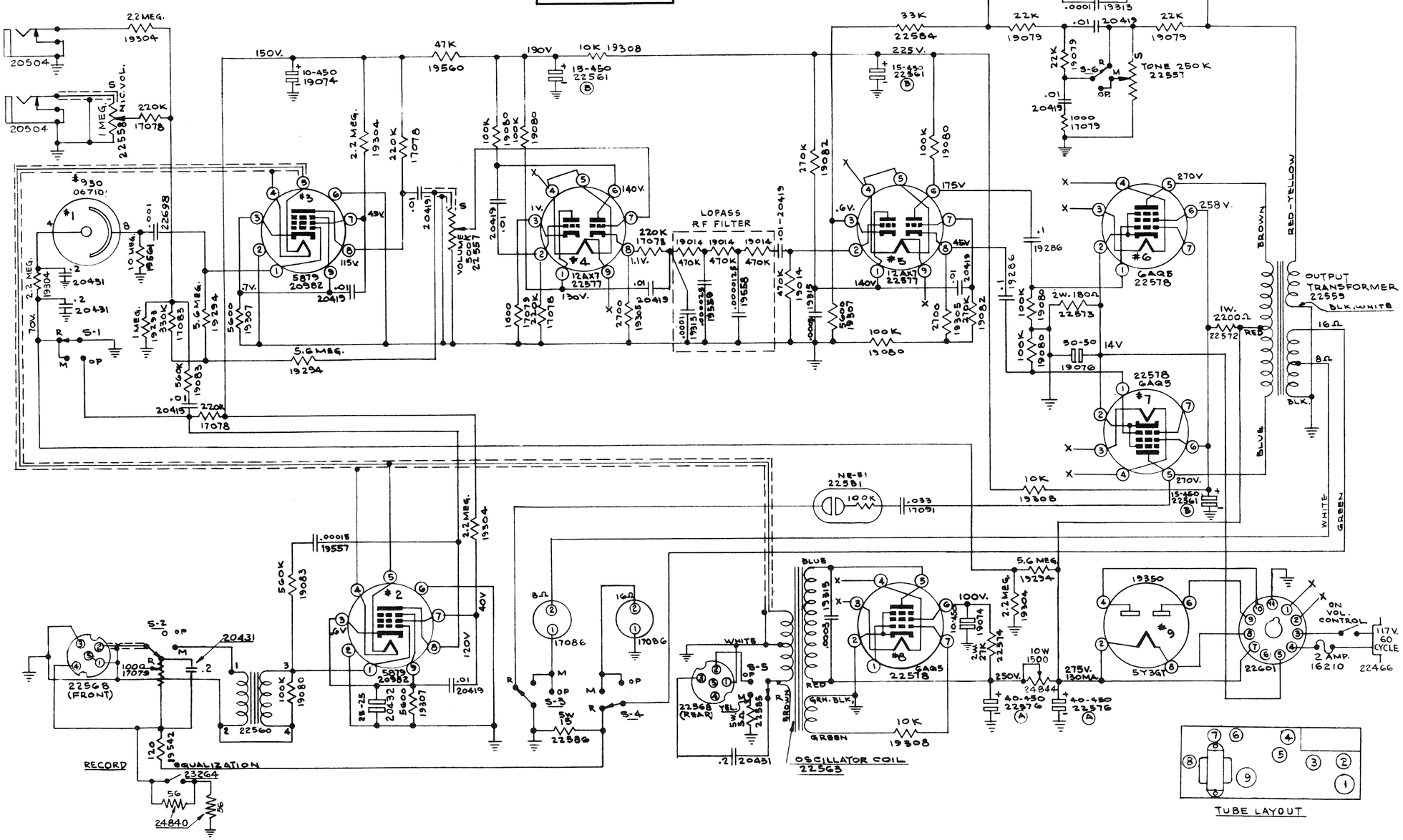

TUBE LAYOUT

NOTE: VOLTAGES POINT TO POINT ARE BASED ON 117 VOLT A.C. LINE INPUT.

Ⓐ-INDICATES CAPACITORS IN SAME CAN (22576)
Ⓑ-INDICATES CAPACITORS IN SAME CAN (22561)
S-INDICATES TERMINAL AT CLOCKWISE STOP.
VOLTAGES INDICATED MEASURED TO CHASSIS GROUND.
(FUNCTION SWITCH IN MAG. OR OPT. PLAY BACK POSITION)
ALL RESISTORS 1/2 WATT UNLESS INDICATED OTHERWISE
S-1 TO S-6 (INCL.) INDICATE SECTIONS OF SELECTOR SWITCH (22558)

WIRE COLOR CODE			
WHITE	GROUND	BROWN	SCREEN
YELLOW	CATHODE	BLACK	AC
RED	B+	WHITE & BLACK	B−
GREEN	GRID		
BLUE	PLATE		

Bell & Howell Co. Chicago U.S.A.

AMPLIFIER WIRING DIAGRAM
FOR DESIGNS 202 (ALL)

DATE 3-3-52 REVISED- 4-25-52	SERVICE DATA	DRAWN acl APVD.

K-3 SHEET B

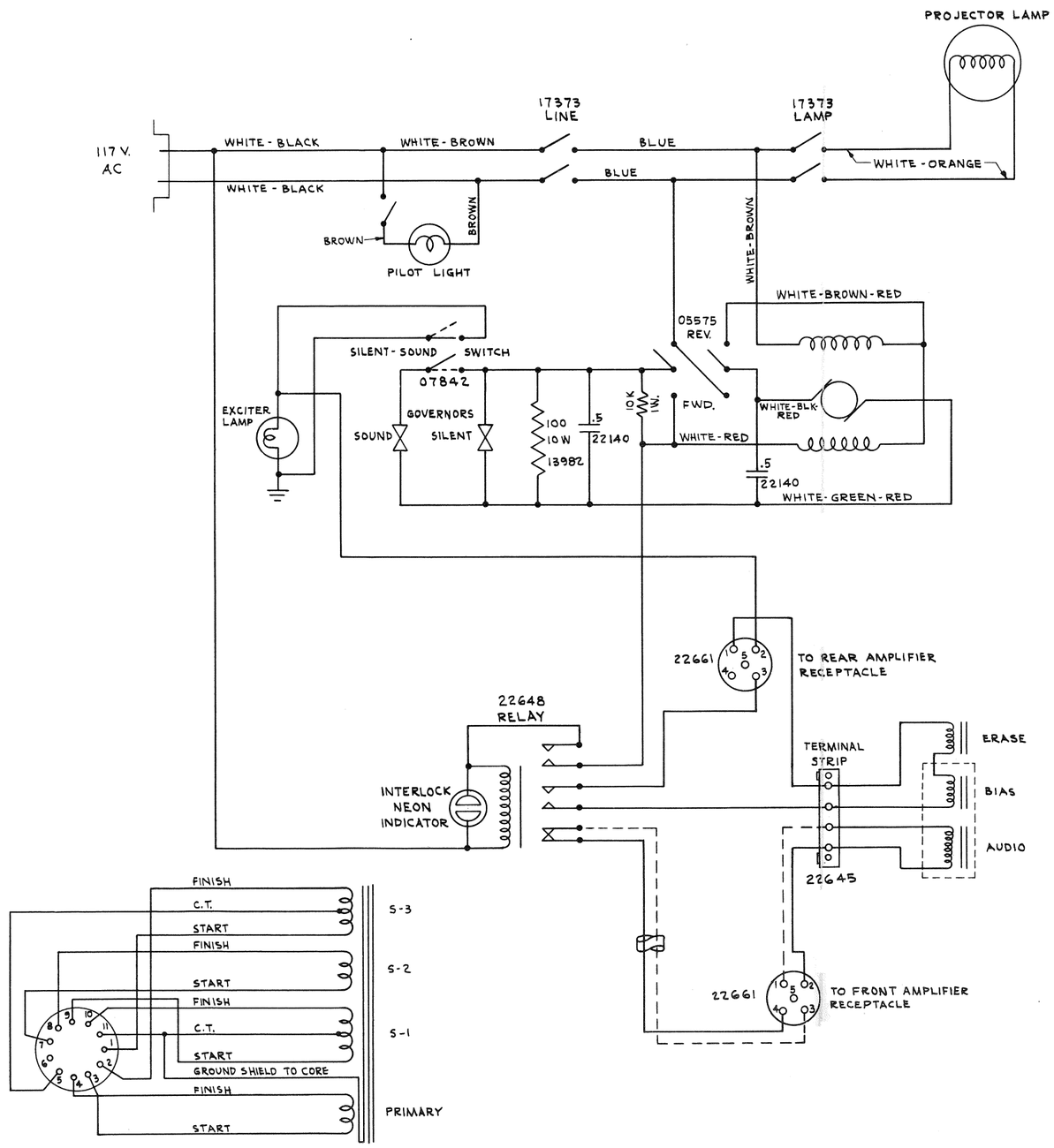

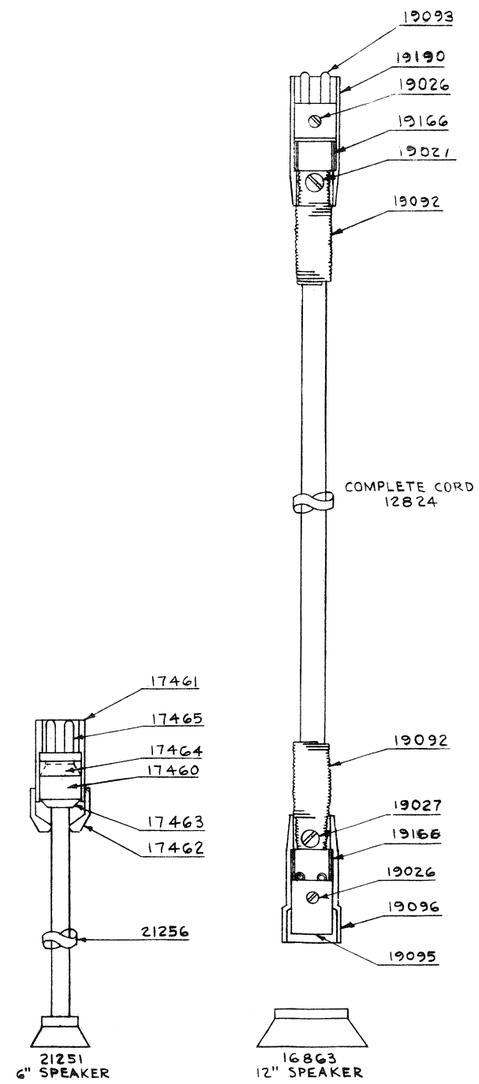

PARTS ON THIS SHEET NOT INCLUDED IN AMPLIFIER CHASSIS

Bell & Howell Co. Chicago U.S.A.		
AMPLIFIER WIRING DIAGRAM FOR DESIGNS 202 (ALL)		
DATE 3-3-52 REVISED-4-25-52	SERVICE DATA	DRAWN acl APVD. L.L.

K-4 SHEET A

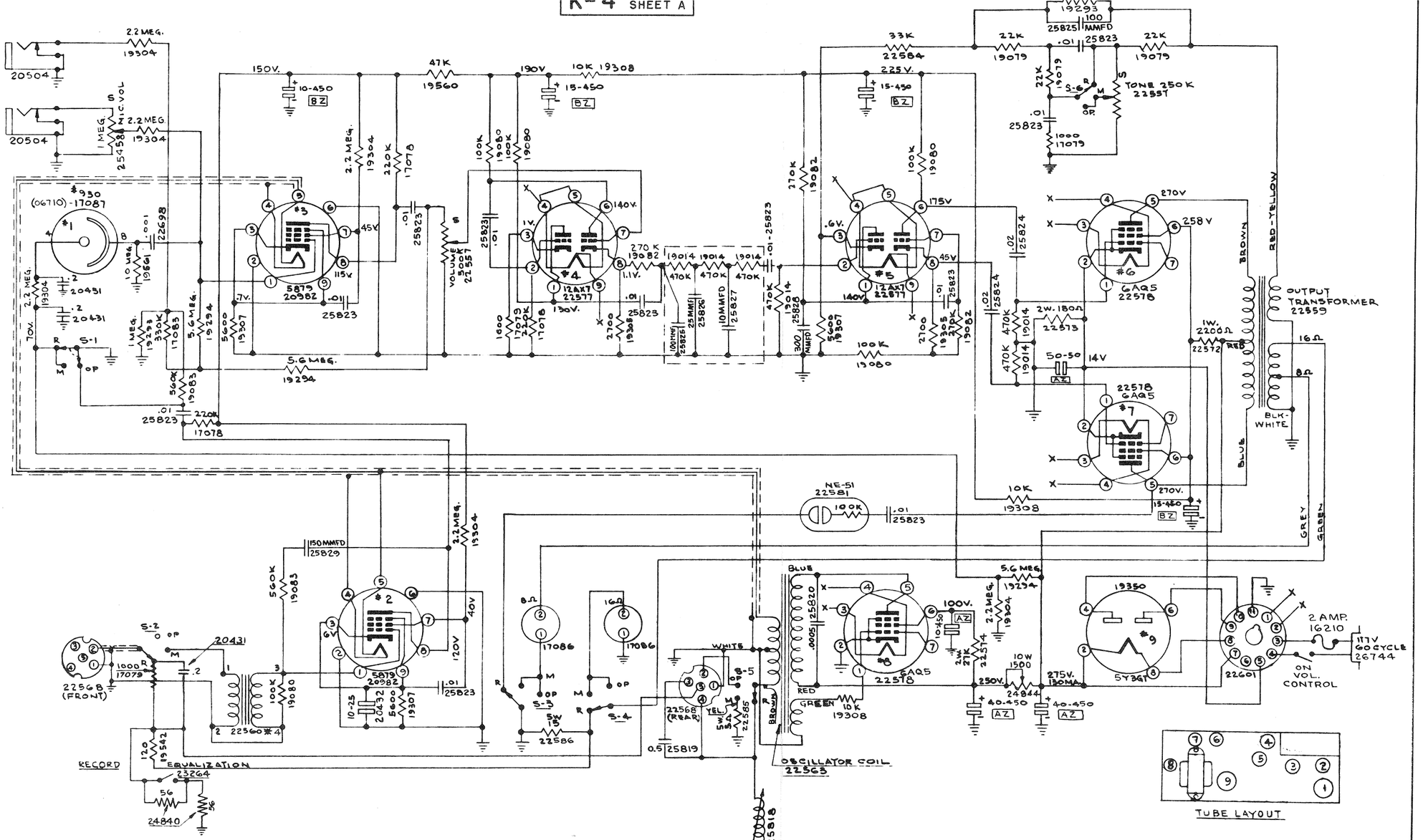

NOTE: VOLTAGES POINT TO POINT ARE BASED ON 117 VOLT A.C. LINE INPUT.

AZ - INDICATES CAPACITORS IN SAME CAN (25821)
BZ - INDICATES CAPACITORS IN SAME CAN (25822)
S - INDICATES TERMINAL AT CLOCKWISE STOP.
VOLTAGES INDICATED MEASURED TO CHASSIS GROUND.
(FUNCTION SWITCH IN MAG. OR OPT. PLAY BACK POSITION)
ALL RESISTORS ½ WATT UNLESS INDICATED OTHERWISE.
S-1 TO S-6 (INCL.) INDICATE SECTIONS OF SELECTOR SWITCH (25458)

WIRE COLOR CODE			
WHITE	GROUND	BLUE	PLATE
YELLOW	CATHODE	BROWN	SCREEN
RED	B+	BLACK	AC
GREEN	GRID	WHITE & BLACK	B−

Bell & Howell Co. Chicago U.S.A.

AMPLIFIER WIRING DIAGRAM
FOR DESIGNS 202 (ALL) (08256)

DATE 11-6-53	SERVICE DATA	DRAWN acl APVD.

K-4 SHEET B

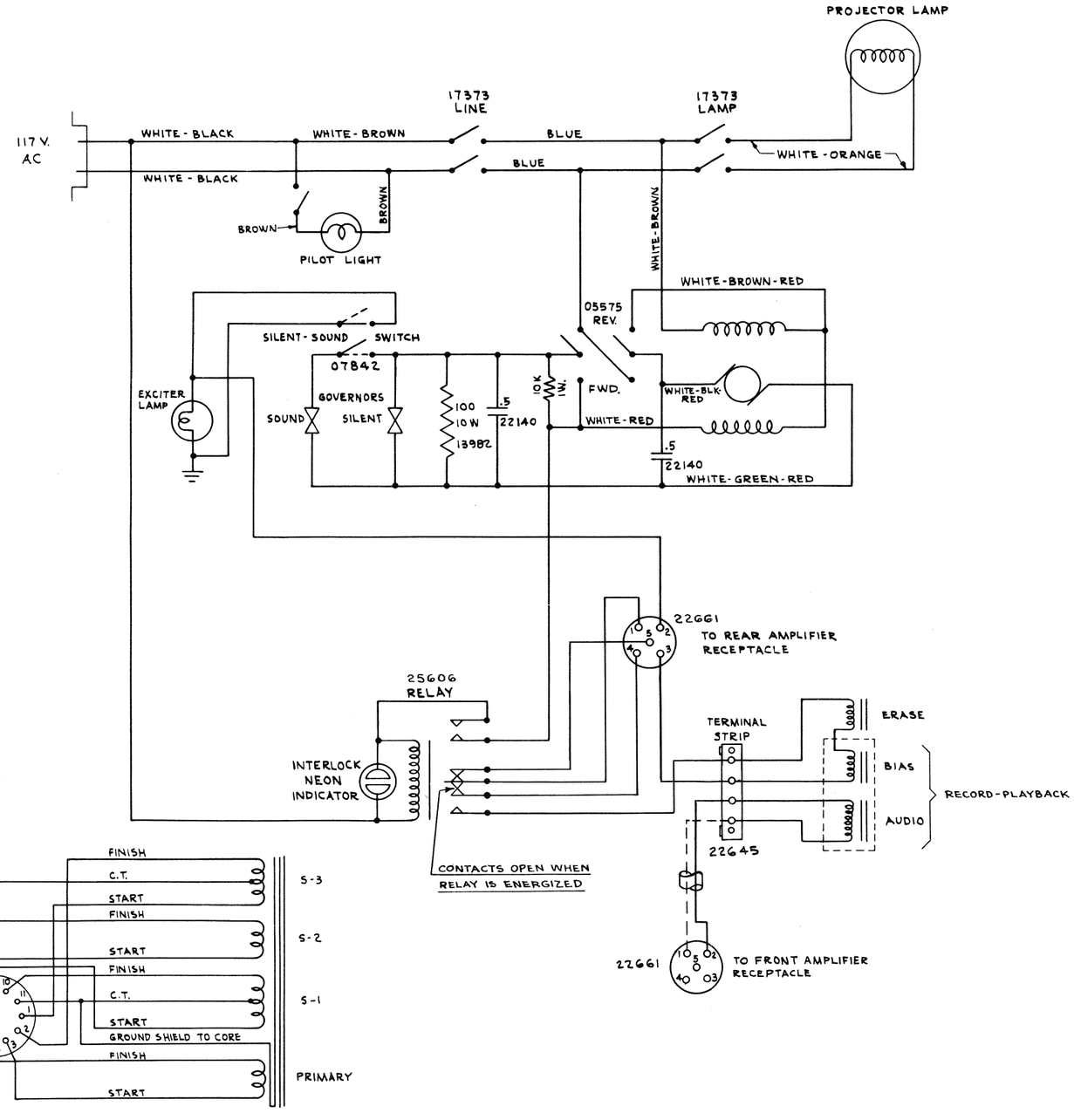

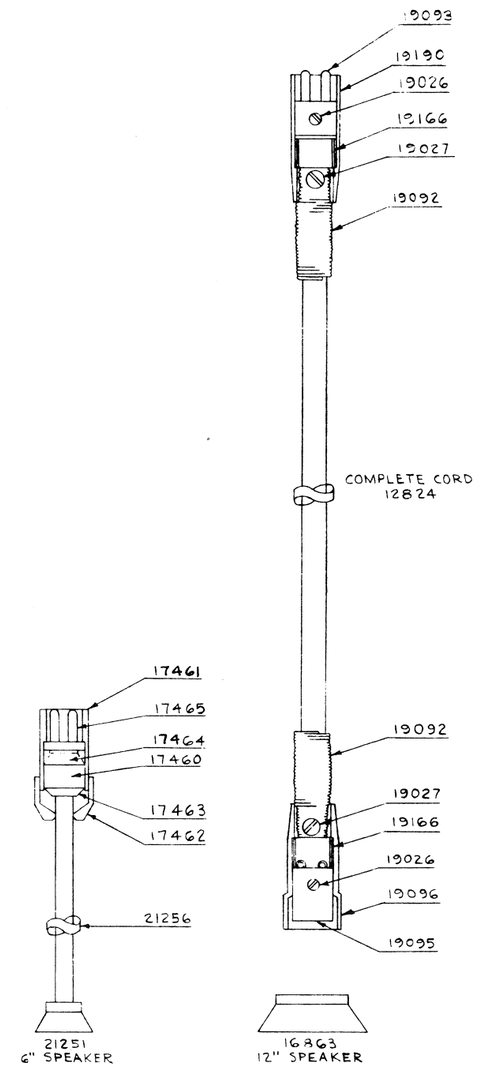

PARTS ON THIS SHEET NOT INCLUDED IN AMPLIFIER CHASSIS

Bell & Howell Co. Chicago U.S.A.		
AMPLIFIER WIRING DIAGRAM FOR DESIGNS 202 (ALL)		
DATE 11-6-53	SERVICE DATA	DRAWN ael APVD.

K-6 SHEET A

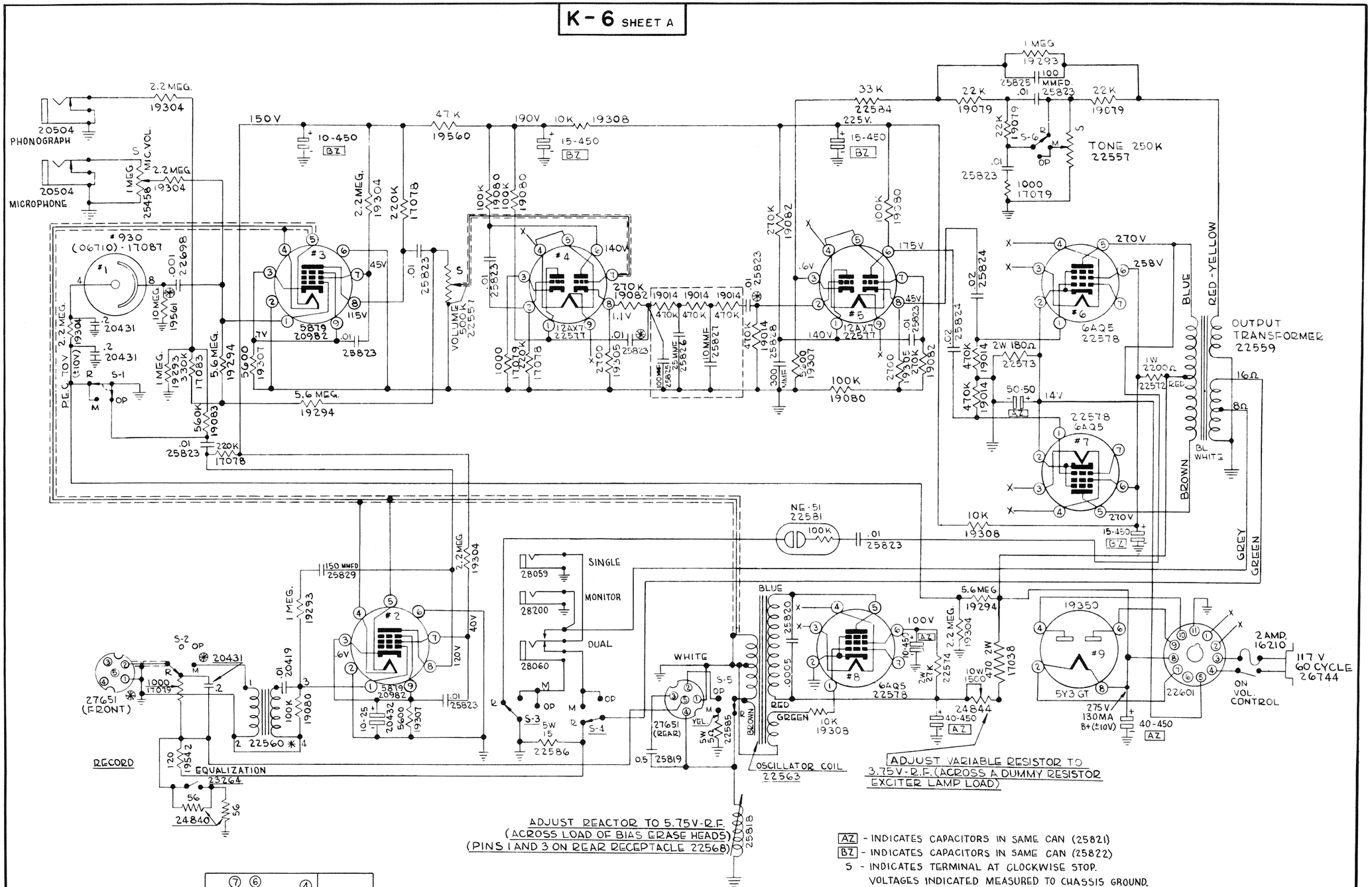

NOTE: VOLTAGES POINT TO POINT ARE BASED ON 117 VOLT A.C. LINE INPUT.

AZ - INDICATES CAPACITORS IN SAME CAN (25821)
BZ - INDICATES CAPACITORS IN SAME CAN (25822)
S - INDICATES TERMINAL AT CLOCKWISE STOP.
VOLTAGES INDICATED MEASURED TO CHASSIS GROUND.
(FUNCTION SWITCH IN MAG. OR OPT. PLAYBACK POSITION)
ALL RESISTORS ½ WATT UNLESS OTHERWISE INDICATED.
S-1 TO S-6 (INCL.) INDICATE SECTIONS OF SELECTOR SWITCH (25458).
⊛ - FOR CRITICAL POSITIONING OF COMPONENTS AT THESE LOCATIONS SEE MODEL.

WIRE COLOR CODE			
WHITE	GROUND	BLUE	PLATE
YELLOW	CATHODE	BROWN	SCREEN
RED	B+	BLACK	AC
GREEN	GRID	WHITE & BLACK	B-

Bell & Howell Co. Chicago U.S.A.

AMPLIFIER WIRING DIAGRAM
FOR DESIGNS 302 (ALL) (09046)

DATE 11-25-55	SERVICE DATA	DRAWN acl APVD. LL

K-6 SHEET B

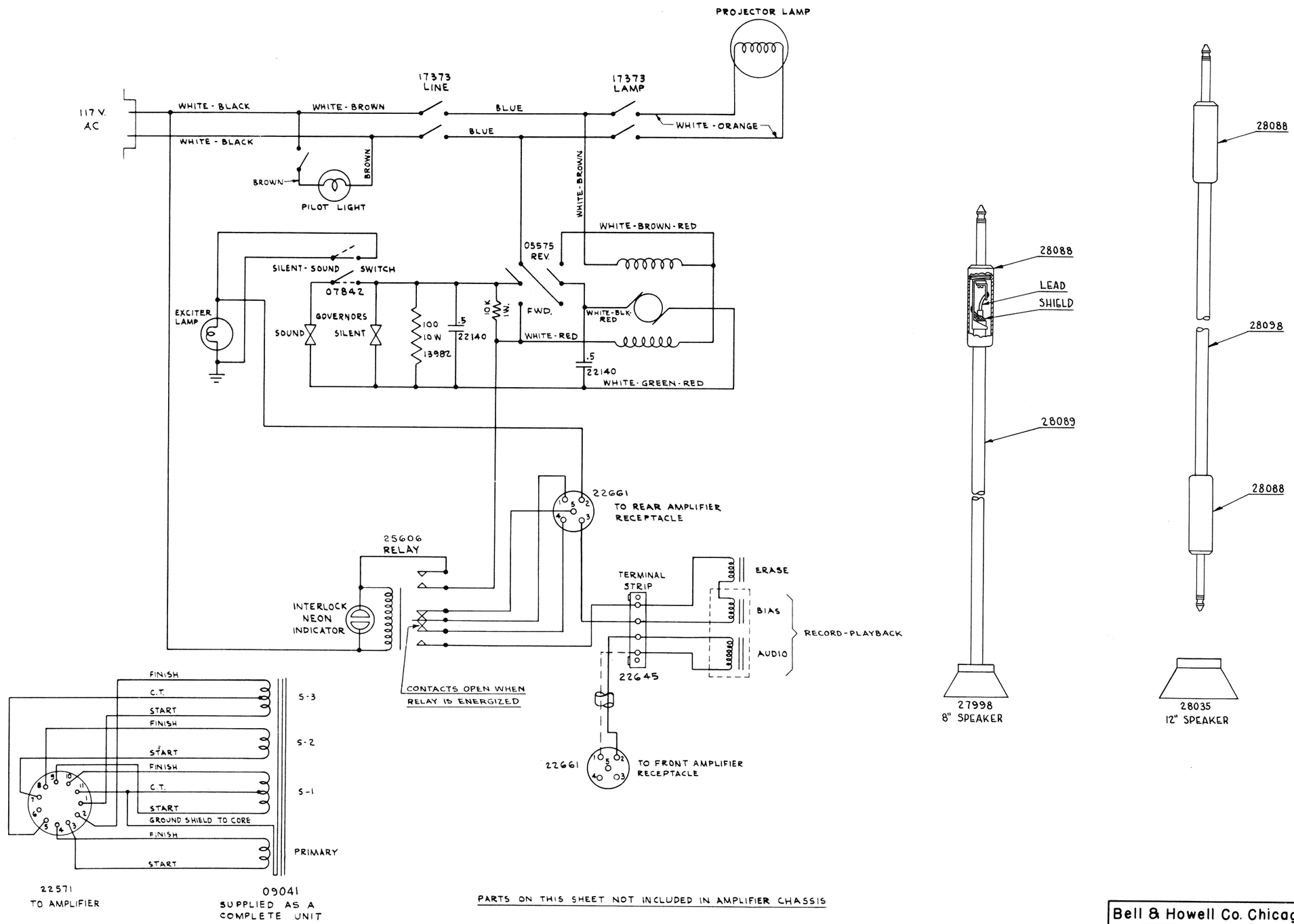

PARTS ON THIS SHEET NOT INCLUDED IN AMPLIFIER CHASSIS

Bell & Howell Co. Chicago U.S.A.		
AMPLIFIER WIRING DIAGRAM FOR DESIGNS 302 (ALL)		
DATE 11-25-55	SERVICE DATA	DRAWN ael APVD. L.L.

K-7 SHEET A

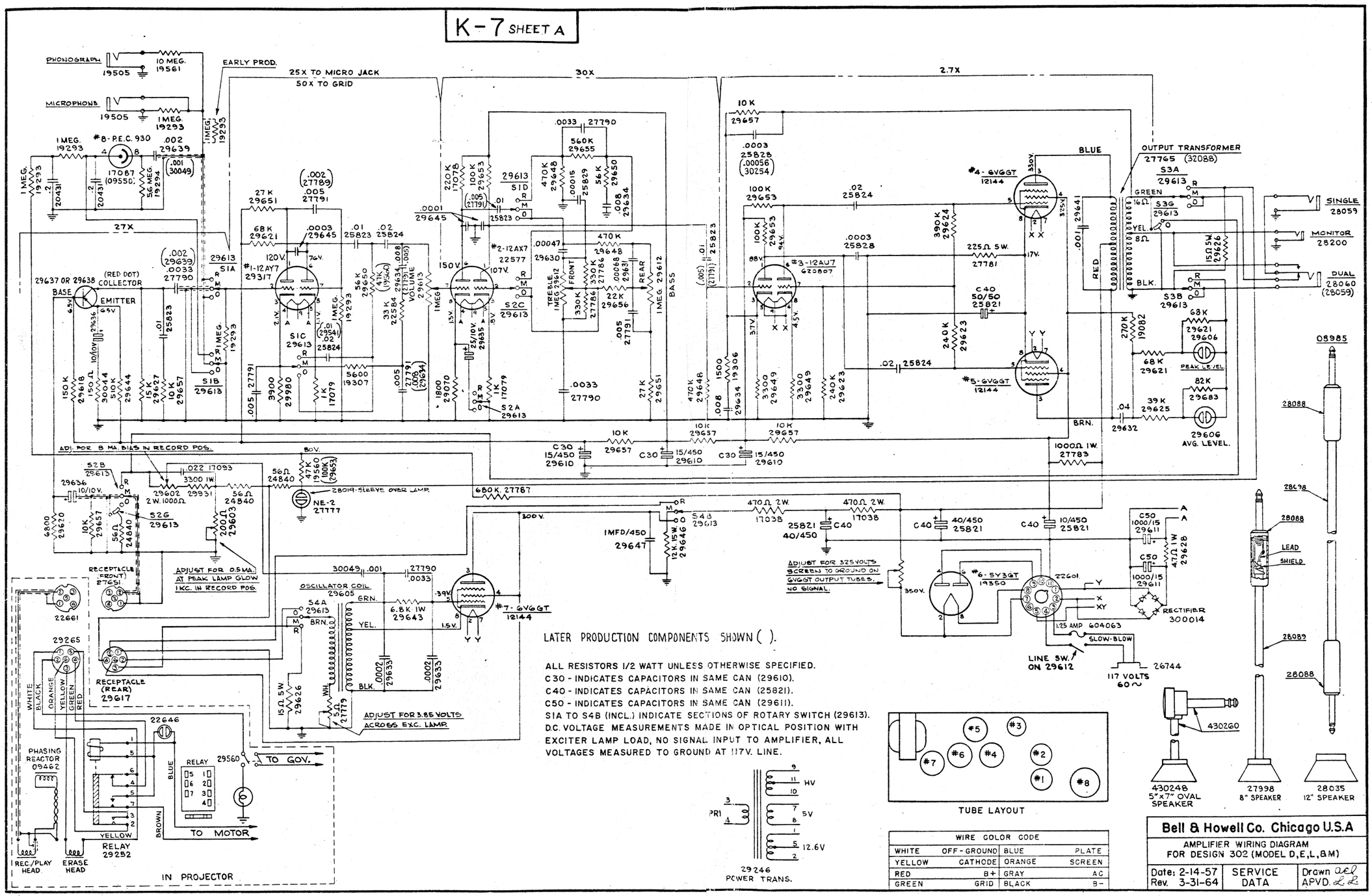

LATER PRODUCTION COMPONENTS SHOWN ( ).

ALL RESISTORS 1/2 WATT UNLESS OTHERWISE SPECIFIED.
C30 - INDICATES CAPACITORS IN SAME CAN (29610).
C40 - INDICATES CAPACITORS IN SAME CAN (25821).
C50 - INDICATES CAPACITORS IN SAME CAN (29611).
S1A TO S4B (INCL.) INDICATE SECTIONS OF ROTARY SWITCH (29613).
D.C. VOLTAGE MEASUREMENTS MADE IN OPTICAL POSITION WITH EXCITER LAMP LOAD, NO SIGNAL INPUT TO AMPLIFIER, ALL VOLTAGES MEASURED TO GROUND AT 117V. LINE.

WIRE COLOR CODE			
WHITE	OFF-GROUND	BLUE	PLATE
YELLOW	CATHODE	ORANGE	SCREEN
RED	B+	GRAY	AC
GREEN	GRID	BLACK	B-

Bell & Howell Co. Chicago U.S.A

AMPLIFIER WIRING DIAGRAM
FOR DESIGN 302 (MODEL D,E,L,&M)

Date: 2-14-57 Rev. 3-31-64	SERVICE DATA	Drawn APVD.

K-7 SHEET B

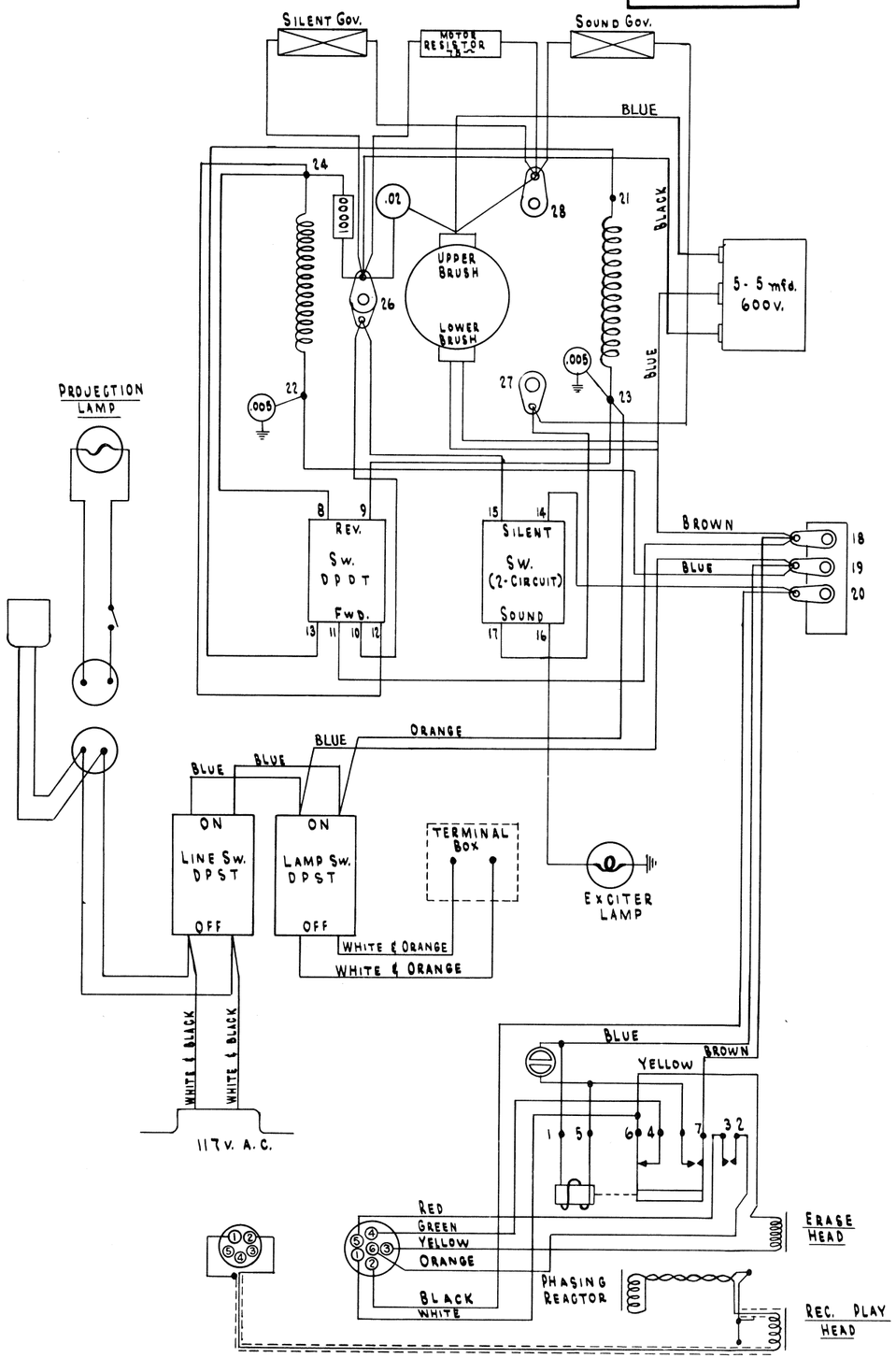

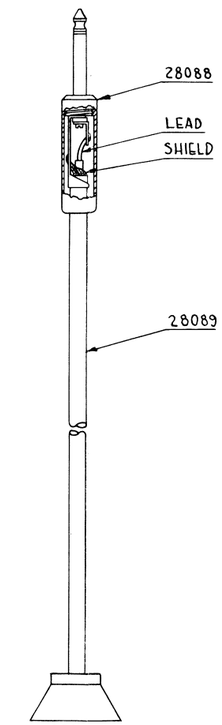

27998
8" SPEAKER

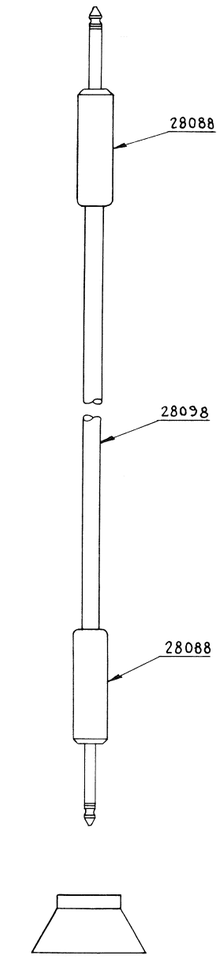

28035
12" SPEAKER

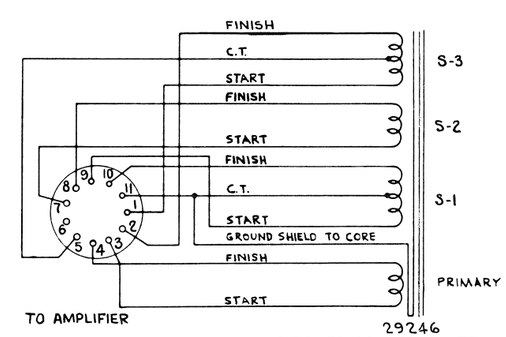

29246
SUPPLIED AS A COMPLETE UNIT

PARTS ON THIS SHEET NOT INCLUDED IN AMPLIFIER CHASSIS.

Bell & Howell Co. Chicago U.S.A.		
AMPLIFIER WIRING DIAGRAM FOR DESIGN 302 (MOD. D & E) (09431)		
DATE 2-14-57	SERVICE DATA	DRAWN acl APVD. LL

L-1

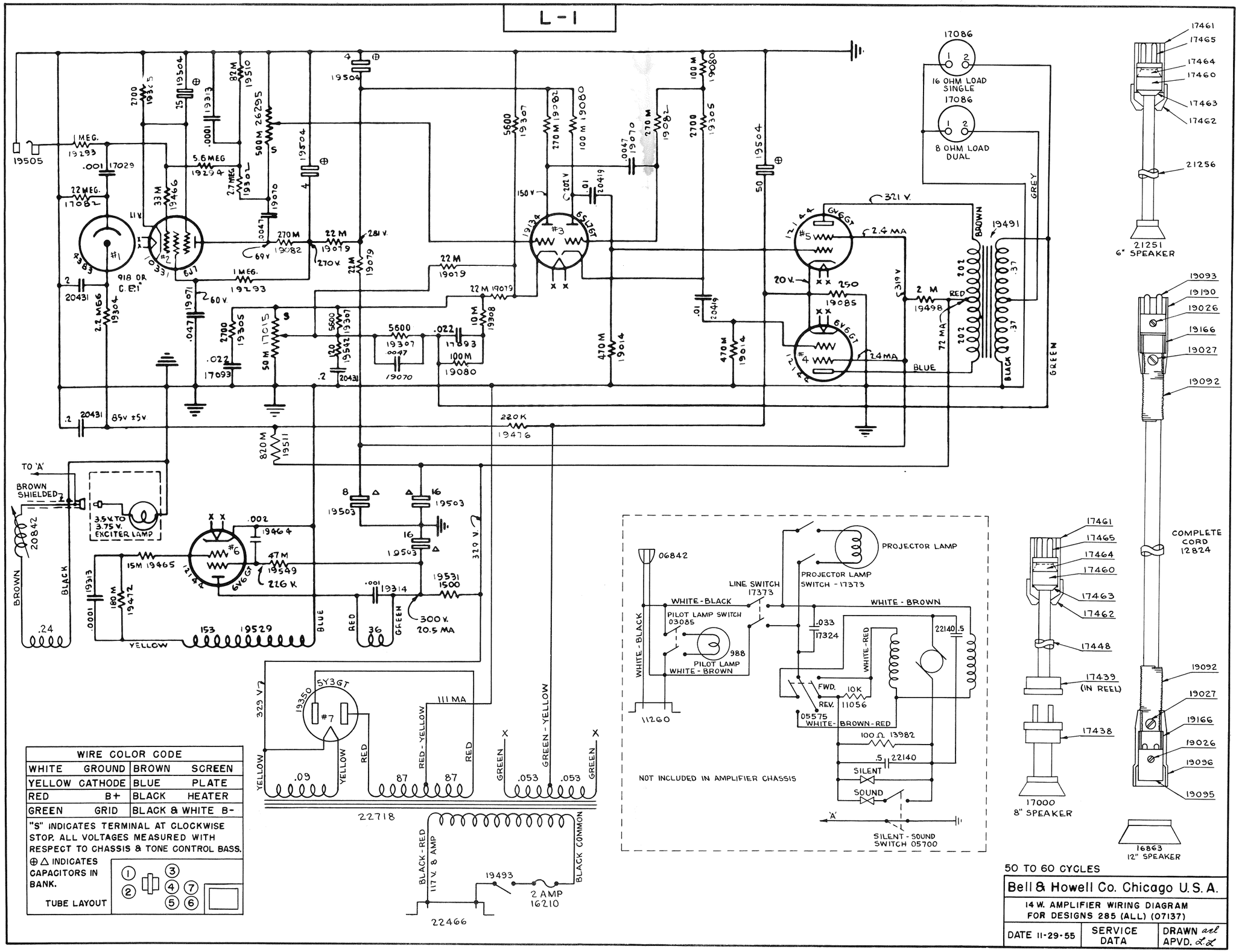

WIRE COLOR CODE			
WHITE	GROUND	BROWN	SCREEN
YELLOW	CATHODE	BLUE	PLATE
RED	B+	BLACK	HEATER
GREEN	GRID	BLACK & WHITE	B-

"S" INDICATES TERMINAL AT CLOCKWISE STOP. ALL VOLTAGES MEASURED WITH RESPECT TO CHASSIS & TONE CONTROL BASS.

⊕ △ INDICATES CAPACITORS IN BANK.

TUBE LAYOUT

50 TO 60 CYCLES

Bell & Howell Co. Chicago U.S.A.

14 W. AMPLIFIER WIRING DIAGRAM FOR DESIGNS 285 (ALL) (07137)

DATE 11-29-55	SERVICE DATA	DRAWN acl APVD. [illegible]

L-2

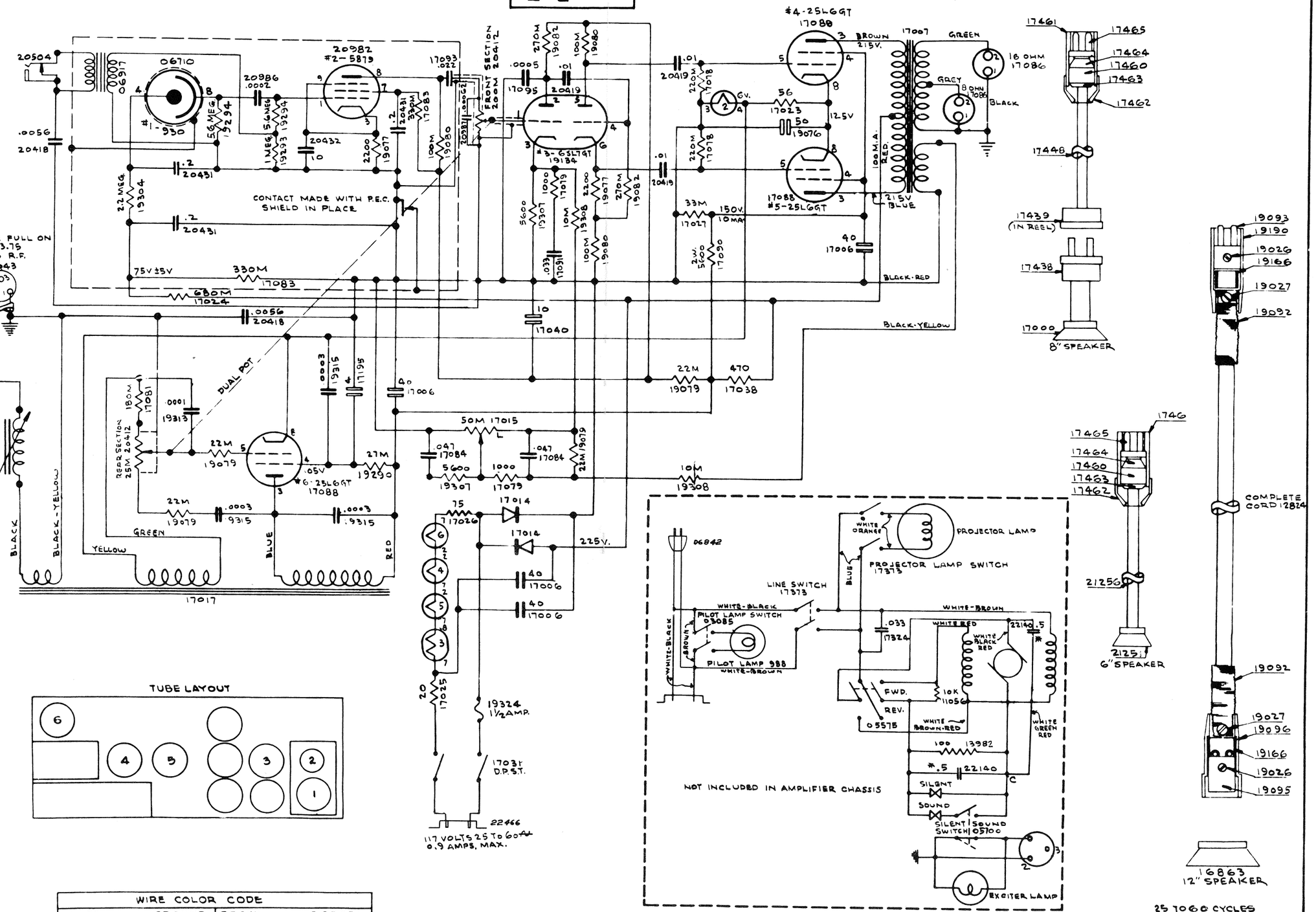

TUBE LAYOUT

WIRE COLOR CODE			
WHITE	GROUND	BROWN	SCREEN
YELLOW	CATHODE	BLACK	AC
RED	B+	WHITE & BLACK	B-
GREEN	GRID		
BLUE	PLATE		

ALL VOLTAGES MEASURED WITH METER WITH 11 MEGOHM INPUT.

Bell & Howell Co. Chicago U.S.A.

10 W. AMPLIFIER WIRING DIAGRAM FOR DESIGNS 285 (ALL) (07138)

DATE 5-23-51	SERVICE DATA	DRAWN WK APVD.

L-3

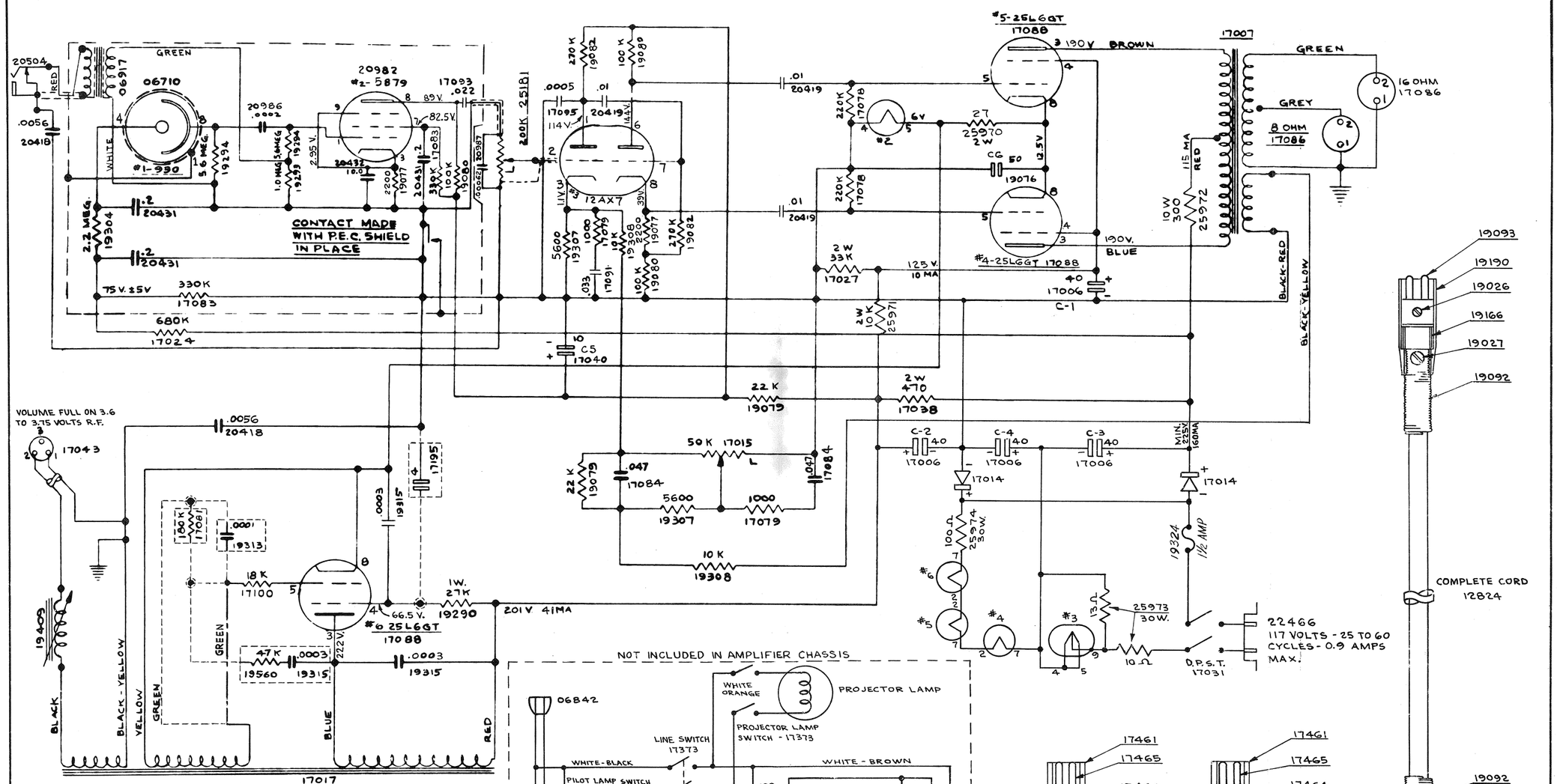

NOTE: ALL VOLTAGES MEASURED WITH METER WITH 11 MEGOHM INPUT.

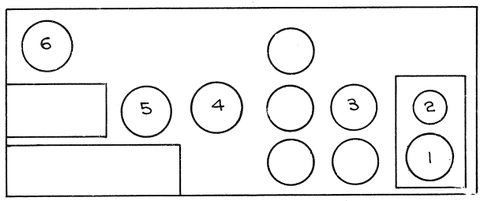

TUBE LAYOUT

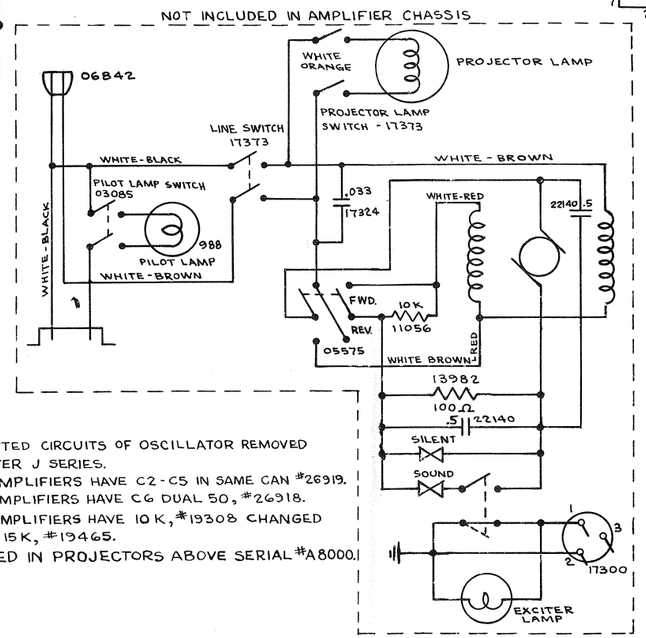

DOTTED CIRCUITS OF OSCILLATOR REMOVED AFTER J SERIES.
S AMPLIFIERS HAVE C2-C5 IN SAME CAN #26919.
S AMPLIFIERS HAVE C6 DUAL 50, #26918.
T AMPLIFIERS HAVE 10 K, #19308 CHANGED TO 15 K, #19465.
USED IN PROJECTORS ABOVE SERIAL #A8000.

WIRE COLOR CODE			
WHITE	GROUND	BLUE	PLATE
YELLOW	CATHODE	BROWN	SCREEN
RED	B+	BLACK	AC
GREEN	GRID	WHITE & BLACK	B-

Bell & Howell Co. Chicago U.S.A.

10W. AMPLIFIER WIRING DIAGRAM
FOR DESIGNS 285 PART #07138 H→U

DATE 3-27-53	SERVICE DATA	DRAWN *rel* APVD

M - 1

STAGE GAINS

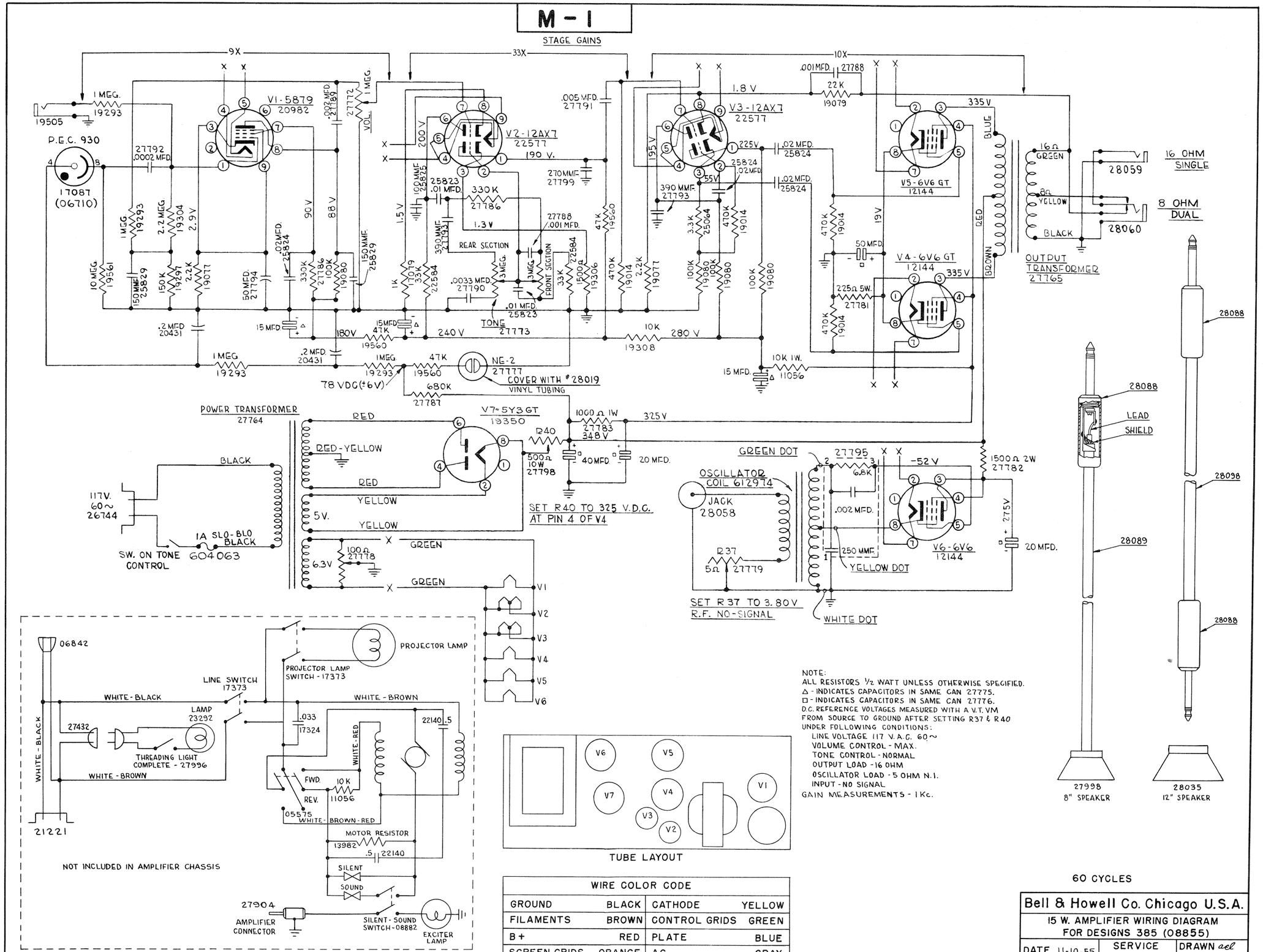

NOTE:
ALL RESISTORS ½ WATT UNLESS OTHERWISE SPECIFIED.
Δ - INDICATES CAPACITORS IN SAME CAN 27775.
□ - INDICATES CAPACITORS IN SAME CAN 27776.
D.C. REFERENCE VOLTAGES MEASURED WITH A V.T.VM
FROM SOURCE TO GROUND AFTER SETTING R37 & R40
UNDER FOLLOWING CONDITIONS:
LINE VOLTAGE 117 V.A.C. 60~
VOLUME CONTROL - MAX.
TONE CONTROL - NORMAL
OUTPUT LOAD - 16 OHM
OSCILLATOR LOAD - 5 OHM N.I.
INPUT - NO SIGNAL
GAIN MEASUREMENTS - 1 Kc.

WIRE COLOR CODE			
GROUND	BLACK	CATHODE	YELLOW
FILAMENTS	BROWN	CONTROL GRIDS	GREEN
B+	RED	PLATE	BLUE
SCREEN GRIDS	ORANGE	AC	GRAY

60 CYCLES

Bell & Howell Co. Chicago U.S.A.

15 W. AMPLIFIER WIRING DIAGRAM
FOR DESIGNS 385 (08855)

DATE 11-10-55 | SERVICE DATA | DRAWN *ael* APVD.

M-2

STAGE GAINS

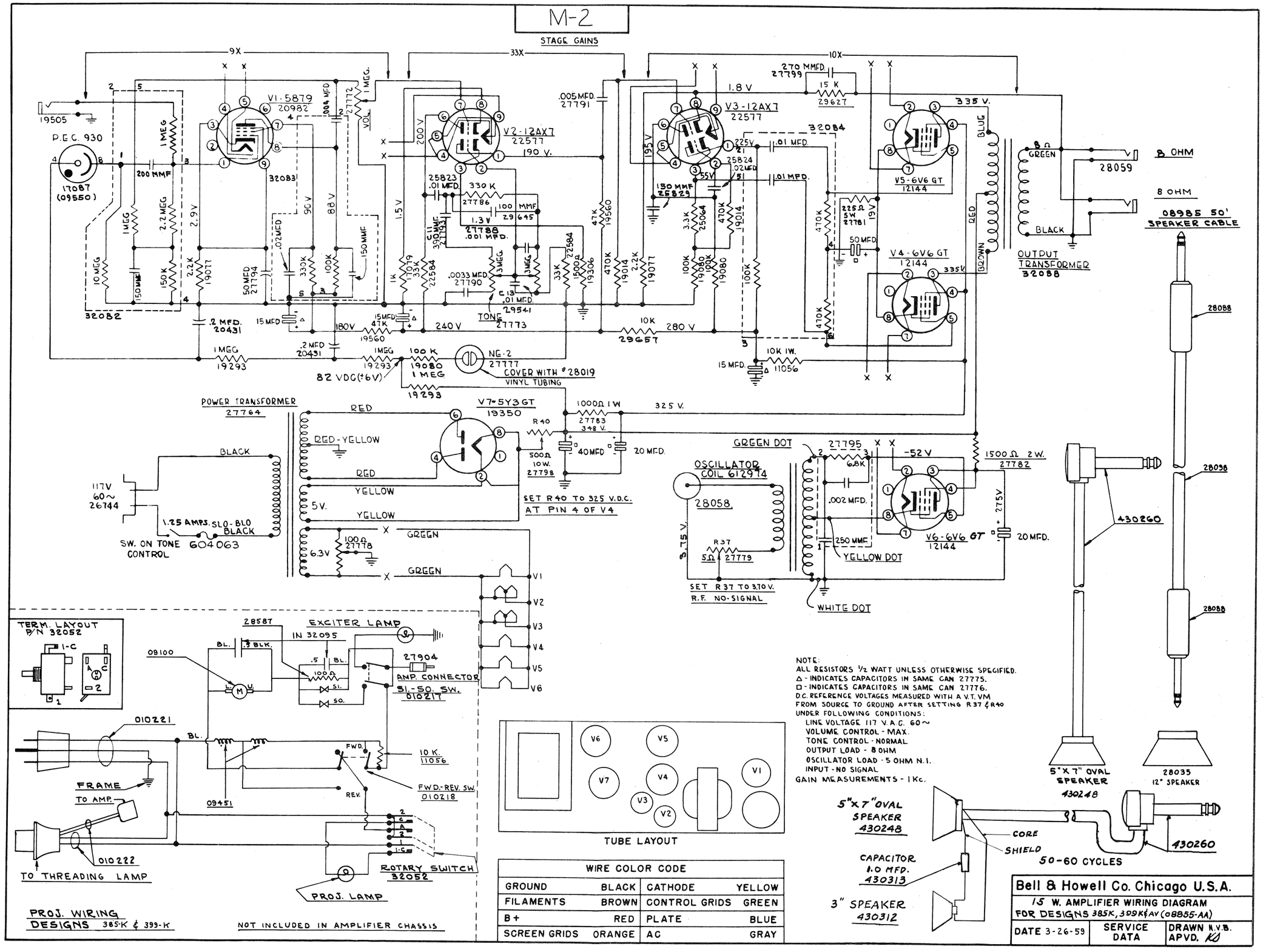

NOTE:
ALL RESISTORS 1/2 WATT UNLESS OTHERWISE SPECIFIED.
Δ - INDICATES CAPACITORS IN SAME CAN 27775.
□ - INDICATES CAPACITORS IN SAME CAN 27776.
D.C. REFERENCE VOLTAGES MEASURED WITH A V.T.VM FROM SOURCE TO GROUND AFTER SETTING R37 & R40 UNDER FOLLOWING CONDITIONS:
LINE VOLTAGE 117 V.A.C. 60~
VOLUME CONTROL - MAX.
TONE CONTROL - NORMAL
OUTPUT LOAD - 8 OHM
OSCILLATOR LOAD - 5 OHM N.I.
INPUT - NO SIGNAL
GAIN MEASUREMENTS - 1 Kc.

WIRE COLOR CODE			
GROUND	BLACK	CATHODE	YELLOW
FILAMENTS	BROWN	CONTROL GRIDS	GREEN
B+	RED	PLATE	BLUE
SCREEN GRIDS	ORANGE	AC	GRAY

Bell & Howell Co. Chicago U.S.A.

15 W. AMPLIFIER WIRING DIAGRAM
FOR DESIGNS 385K, 399K & AV (08855-AA)

DATE 3-26-59	SERVICE DATA	DRAWN H.V.B. APVD. KJ

N-1

STAGE GAINS

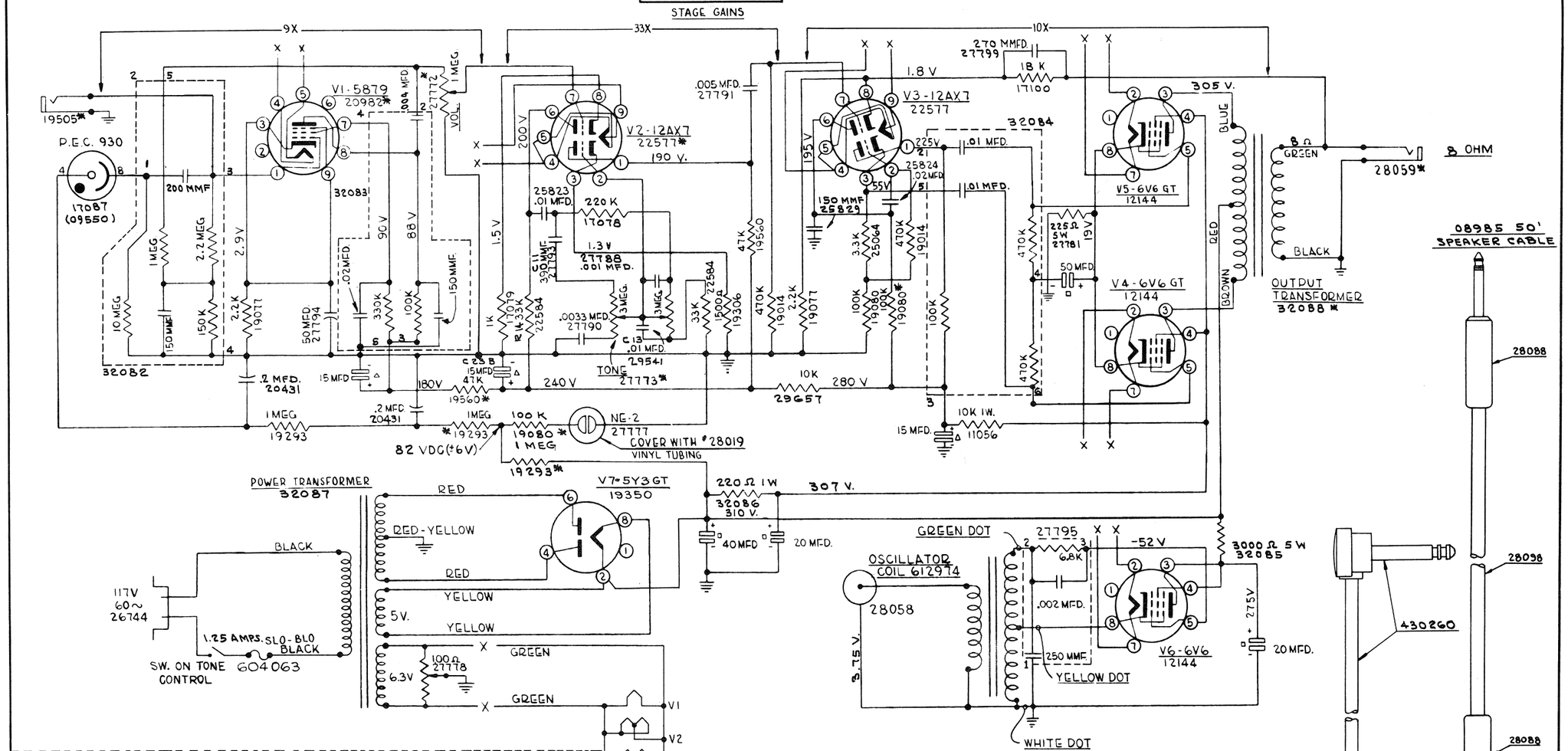

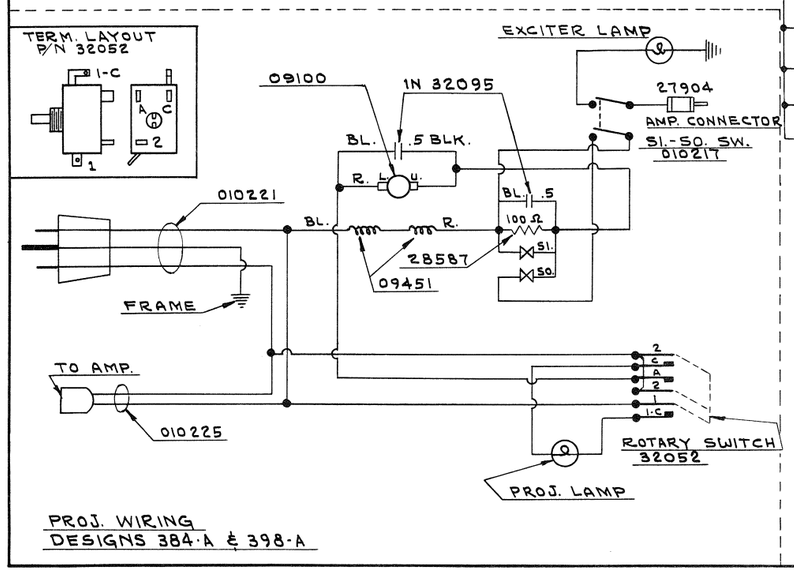

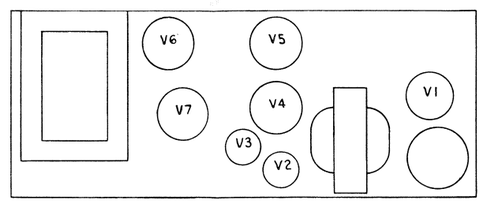

TUBE LAYOUT

WIRE COLOR CODE			
GROUND	BLACK	CATHODE	YELLOW
FILAMENTS	BROWN	CONTROL GRIDS	GREEN
B+	RED	PLATE	BLUE
SCREEN GRIDS	ORANGE	AC	GRAY

NOTE:
ALL RESISTORS 1/2 WATT UNLESS OTHERWISE SPECIFIED.
Δ - INDICATES CAPACITORS IN SAME CAN 27775.
□ - INDICATES CAPACITORS IN SAME CAN 27776.
D.C. REFERENCE VOLTAGES MEASURED WITH A V.T.VM
FROM SOURCE TO GROUND
UNDER FOLLOWING CONDITIONS:
LINE VOLTAGE 117 V.A.C. 60~
VOLUME CONTROL - MAX.
TONE CONTROL - NORMAL
OUTPUT LOAD - 8 OHM
OSCILLATOR LOAD - 5 OHM N.I.
INPUT - NO SIGNAL
GAIN MEASUREMENTS - 1Kc.

60 CYCLES

Bell & Howell Co. Chicago U.S.A.

10 W. AMPLIFIER WIRING DIAGRAM
FOR DESIGNS 384-A & 398-A (010214)

DATE 1-26-59	SERVICE DATA	DRAWN N.V.B. APVD.

P-3A

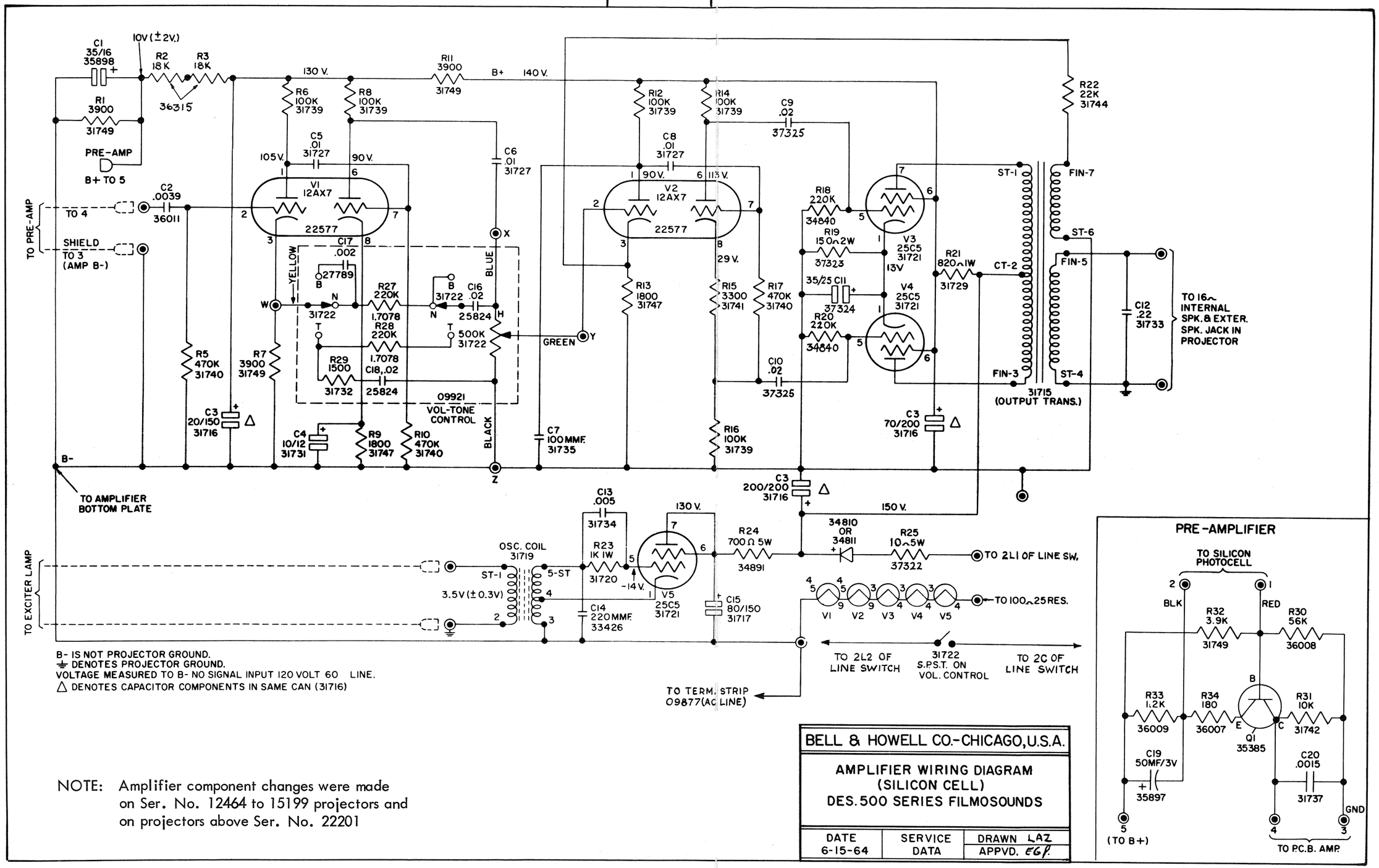

B- IS NOT PROJECTOR GROUND.
⏚ DENOTES PROJECTOR GROUND.
VOLTAGE MEASURED TO B- NO SIGNAL INPUT 120 VOLT 60 LINE.
△ DENOTES CAPACITOR COMPONENTS IN SAME CAN (31716)

NOTE: Amplifier component changes were made on Ser. No. 12464 to 15199 projectors and on projectors above Ser. No. 22201

BELL & HOWELL CO.-CHICAGO, U.S.A.		
AMPLIFIER WIRING DIAGRAM (SILICON CELL) DES. 500 SERIES FILMOSOUNDS		
DATE 6-15-64	SERVICE DATA	DRAWN LAZ / APPVD. EGP

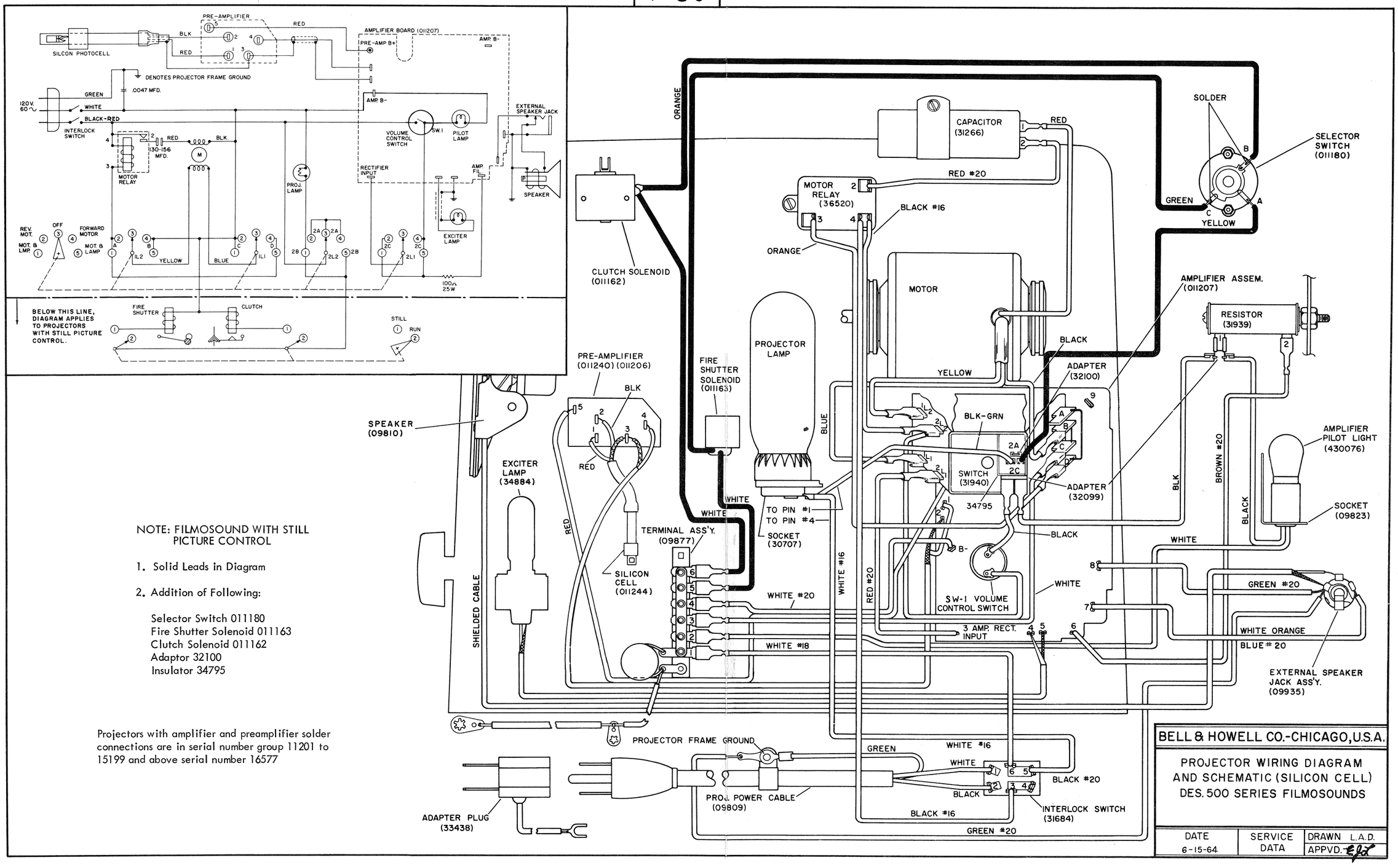

NOTE: FILMOSOUND WITH STILL PICTURE CONTROL

1. Solid Leads in Diagram
2. Addition of Following:

   Selector Switch 011180
   Fire Shutter Solenoid 011163
   Clutch Solenoid 011162
   Adaptor 32100
   Insulator 34795

Projectors with amplifier and preamplifier solder connections are in serial number group 11201 to 15199 and above serial number 16577