Nikon R10 SUPER ZOOM

7KB

REPAIR MANUAL

NIPPON KOGAKU K.K.

Tokyo, Japan

Printed in Japan

(74. 5. c) H-1

CONTENTS

Foreword

This repair manual, covering for the most part the methods of disassembly, replacement, adjustment, and operation checking of the Nikon 8mm cine-camera Model R10 SUPER ZOOM, will be serviceable for finding out what measures are to be taken, when any malfunction, disorder, or anomaly takes place, and for performing appropriate repairs, even though in few cases these repair procedures are directly given.

The numbers and names of the parts given in this manual are in accordance with those listed in the Repair Parts List.

The use of the tools for repairs and adjustments correspond to those mentioned in the Instructions for Using the Tools for 5KB and 6KB.

Chapter I

Replacements, Readjustments and Repairs

Replacements, and readjustments, in some cases malfunctions, conceivable causes and repair methods are mentioned in this chapter. For disassemblies and reassembly checks so far as necessary, refer to the paragraph numbers given as MD-No. and MC-No, respectively, of Chapter II and III.

1. Optical systems

1-1. Replacement of 1st, 2nd or 3rd lens-group

a. 1st lens-group

Unscrewing three fastening screws #1673, remove distance ring #1601 (Fig. 1).

Take out the 1st lens-group barrel #1603, using a rubber plate, etc. Do not miss washer #1605, which will detach at the same time. Thereafter, the 2nd lens-group(G4, L2) together with washer #1621 can be removed by means of 2nd lens-group barrel #1619.

After replacing the 1st lens-group, adjust the positions of the 1st and 2nd lens-groups by means of their respective washers #1605 and #1621, and furthermore, bring the focus displacement to their minimum degrees, and also make the back focus within the allowable range as given in Fig. 14.

b. 2nd lens-group cam-pin C1

Refer to MD-1,-2 and -4 for disassembly.

For fitting the 2nd lens-group slide ring #1618 (cam-pin) to cam ring A #1610 (cam-groove), turn zoom scale ring #1614 until the 2nd lens-group cam-pin C1 comes into the tool hole, provided on the side of cam-ring B #1611.

Extend the cam-pin ring #1650 by screwing in the cam-pin nut #1651 using a nut driver J11100, or make the cam-pin ring #1650 narrower by releasing the nut, so that the clearance against the cam-pin is as uniform as posible through the entire length of the cam-groove. After fitting, apply adhesive agent for locking the nut #1651,

taking care not to let the agent spread out.

Furthermore, after the adjustment, rotate 10 — 20 times the zoom ring to have the adjusted cam-pin closely adapted in position.

Note : The slit on the cam-pin ring #1650 is not to touch the groove walls through the entire length of the cam-groove.

c. 3rd lens-group cam-pin C2

Refer to MD-1 — MD-3 for disassembly.

For fitting the 3rd lens-group slide ring #1622 (cam-pin) to the 3rd lens-group cam-pin ring B #1611 (cam-groove), turn zoom ring #1614, until the cam-pin C2 cames into the proper position to screwing the nnt on the cam-groove. To fit uniformly to the groove through the entire length, extend the cam-pin ring #1650 by screwing in the cam-pin nut #1651, or make narrower by releasing the nut using a nut driver J11100. (Fig. 9)

1-2. Macrophoto-ring makes no movement through the entire scale range.

a. Constrain of the ring against front lower cover #1008.

b. Touching of the ring against the stopper of limit switch #1653 or #1654.

1-3. Infinity (∞) click does not work

Make stronger the strength of click spring #1627.

1-4. No coincidence of split-images at infinity (∞)

Refer to MD-1 — MD-3 for diassembly.

Make adjustment so that at f=70mm the coincidence is obtained with the distance scale set to infinity (∞). The coincidence error (including parallax) is to be within ± 20". (Using the collimator J19001)

1-5. Out of focus.

a. Back-focus derangement

Refer to MD-1 — MD-4 for disassembly.

Turn claw cam-shaft #109 to open the shutter sector.

Fitting back-focus adjusting mirror J15028-1 to the surface of the

aperture plate, insert it correctly into the camera body.

Set the focusing ring #1601 to infinity (∞).

Insert the filter key into the slot.

Unscrewing four screws #1090c, release lens mount casting #1003.

Inserting back-focus adjusting washers #1659 between the released lens mount casting #1003 and the intermediate casting #1002, correct the error. After correction, fasten up the screws #1090c and see that the accuracy within the range given in Fig. 14 is obtained.

b. Focus displacement

To eliminate the focus displacement (Fig.14) at both ends (T and W), move the 1st lens-group (G1 - 3) back and forth (Fig.20).

For an intermediate position, move the 2nd lens-group(G4 - 6).(Fig.20)

Make the above adjustments alternately, until a minimum displacement is attained.

1-6. In correct picture angle (i.e. parallax)

For disassembly, refer to MD-1 — MD-4.

Set the distance scale to 1.5m, and attach the close-up tool lens J18046.

Stand the camera upon a flat base, and attach the close-up tool lens J18046 to the camera. Bringing the aperture image into coincidence with the fiducial line on the test chart J18045 (Fig. 13), move the finder mask, after releasing adjusting nut #680, so that the mask comes within its allowable position on the test chart by meams of G20, and by turning finder prism holder #678. (Fig.20)

Unscrewing two screws #1090a, remove the servo-amp. printed circuit #1514. Swing out the filter holder #1475 from the optical axis.

Release two screws #1671, adjust prism (G14A,B) holder #1629 by moving along the oblong hole.

The adjustment, relating to the coincidence parallax, to seeing of the image, etc. should be carefully made.

In the same way, the inclination of the aperture to the mask is to be made within 1° (Fig. 9)

Check for infinity (∞) coincidence.

Note : Since there is a likelihood of large derangement of coincidence and picture angle caused by adhesive separation of G20, it is necessary to check the position of G20 by pushing with the finger, because it is difficult to find out such a defect with the eyes (Fig. 20).

2. Film Drive

2-1. Shutter release button is heavy or does not spring back after pushed.

Constrain between large cover #1004 and or small cover #1005, or too strong contact pressure of EE contact #832, or of motor switch contact #833.

2-2. Shutter release button can be pushed, but no film is driven.

a. The motor does not run (abnormal voltage drop, heating the penlight batteries).

i) Take out the cartridge from the camera. If the motor does run, poor cartridge may be the cause.

Turning slowly the take-up spindle in the taken out cartridge, let the film run about 10cm by pushing in with the finger.

If this is possible, reload the camera with the cartridge (Fig. 16.). If not, replace the cartridge with another one.

ii) If, even though the cartridge is taken out, the motor does not run, poor insulation of the internal circuit may be the cause.

Connect the tester between the plus (+) and minus (-) terminals of the battery cassette receptacle in the grip (Fig. 5), and check the insulation, setting the switch to OFF (i.e. not depressing the shutter release button).

If poor insulation or short circuit is found, this may be attributed to poor soldering or excessive soldering (causing cont-

act to other parts) of the film drive circuit on the base of the grip or to damaged lead wires.

iii) In the case of no defect in the circuit, check short circuit in driving motor #101 (Fig. 18 and 19). If necessary, replace motor subassembly A5.

iv) Any mechanical disorder of the film drive subassembly may result in poor operation of its operating parts, such as heavy rotation of the take-up spindle (refer to 2-4) or too deep engagement of stopper #141 (refer to 2-5).

b. The motor does not run (no heating the penlight batteries)

Disconnection of the motor driving circuit or internal circuit of motor.

Check the disconnection using the tester in the same way as mentioned in a-ii) or a-iii).

c. Even though the motor runs, the film is not fed.

i) Take the cartridge out of the camera. If some of the perforations are found out off, poor cartridge may be the cause. Follow the procedure a-i) for repair.

ii) If no perforation is found cut off, incorrect (onesided) position of the claw may be the cause. Refer to 2 - 6 for positional adjustment of the claw.

2-3. If the camera stops running, while the shutter button is being depressed or when the finger is lifted up from the shutter button during Continuous-Running lock, too weak contact pressure of motor switch contact #833 inside the grip may be the cause.

2-4. Too heavy rotation of the winding-up spindle may be caused by too large friction of the film winding spindle.

Standard friction torque : 45 -- 60 g.cm in driving (for measurement, use J19017 and J15082).

i) Remove the large cover and FR operating plate. Refer to MD-1 and-5.

ii) Remove E-ring #380 from FR circuit plate #321. Add, decrease or replace adjusting washers #373A to match the standard.

iii) If it cannot be sufficiently adjusted, remove snap-ring #380, washers #373 and spring washers #373A from FR circuit plate #321, and for replacement, take out take-up spindle subassembly A23 from the film chamber.

2-5. Single frame exposures take place in succession (most likely at a running speed of 54 picture frames).

a. Insufficient engagement of stopper #141.

Remove the large cover, referring to MD-1.

Checking the starting voltage of the motor, make deeper and deeper the engagement of stopper #141 by releasing set screw #263 more and more (Note that too deep engagement will prevent starting of the motor).

b. Insufficient capacity of electrolytic capacitor #195.

Replace electrolytic capacitor #195, taking caution of its polarity (Fig. 19). Extremely insufficient, replace the capacitor.

c. If too weak armature return spring #153 is the cause.

Replace turn-back spring #153 or make it stronger. However, do not so strong as to lower the start voltage, because of insufficient engagement of stopper #141.

d. If the adjustment is not yet attainable, replace magnet release subassembly A6. After removing the large cover and FR operating plate, referring to MD-1 and -5, peel off the leatherette #11 from the camera back, open side-cover #5, and unscrewing two screws #64b, remove cartridge pressure spring #16 from inside the film chamber. Unscrewing three screws #258, replace the subassembly A6. Two screws #255 on the back are used to make adjustment of the magnet coil unit.

2-6. Onesided positioning of the claw

Check the position of the claw in relation to the film perforations. Place the claw checking film (J15034) or transparent film of 50 — 60mm in length onto the aperture plate. Turning the motor gear manually 2 — 3 picture frames. See the coincidence of the center of the hidden area (Fig. 15) of aperture with that of the film perforation within ± 0.13mm in the vertical direction. In the lateral direction, the feeding claw is to come to about the center of the perforation.

1) Vertical and lateral adjustment

Perform MD-8 for disassembly.

Releasing two screws #259, change the eccentricity of claw mount eccenter #133, and move minutely the claw mount #130 vertically and laterally, so that the claw does not touch the curved edge of each perforation, while the film is advanced, as shown in Fig. 15-A.

2) Height adjustment

With respect to the protruding height of the claw, when the film is removed, the position of the end of the claw is to locate 0.28 ± 0.05mm from the fiducial surface (at three points). (Fig. 15 and 17) Unscrewing three screws #256, remove footage scale subassembly A11 (Fig. 4). Placing height adjusting tool J15083 onto the fiducial aperture surface, and precisely moving bearing set screws #134, make height adjustment (Fig. 15).

The correct relative position is given in Fig. 17. After adjustment, using adhesive agent, lock screws #259 and bearing set screws #134.

3. Footage counter

Incorrect footage counter indication

Disengagement of counter pinion #172 from counter dial gear #174

Incorrect operation of cartridge coupling lever #182

Incorrect function of counter pinion spring #185 (due to weakness)

Incorrect engagement of counter 2nd worm #163 with counter 2nd wheel #171.

Note : When replacing counter subassembly A11, take care of the engagement between counter 2nd worm #163 and counter 2nd wheel #171.

4. Servo-EE

4-1. Cautions to be taken in disassembling, repair and reassembling.

Do not touch the following parts with the finger.

1) Pointer needle
2) Aperture diaphragm blades
3) Manual lever
4) Semi-fixed resistors for zero-balancing on the amplifier

4-2. Replacement of subassemblies H1 and H2

If EE mechanical part #1513 or servo-amplifier #1514 is found poor or disorder, proceed to MD-1 — MD-4 and -7.

After reassembly, check the wiring, the operation and accuracy of the above two parts. However, in replacement of amplifier subassembly H2, no erroneous wiring for the powersource terminals and no impression of inverse voltage force are permitted.

4-3. Hunting

1) Disconnection of silk-wrap lead-out wire for the damping coil or internal disconnection of the coil. ... Repair: Replace subassembly H1. (Fig. 8 and 18)
2) Disconnection of orange or brown lead wires. ... Repair: Replace the wires, or resoldering. Applying hot wind of about 60°C, have the vinyl tube contracted shrinked.

4-4. No operation

1) Disconnection of wires, such as for driving coil, silk-wrap lead-out wires, other lead wires. ... Repair: Replace the wires, in the case of disconnection of black, green lead wires. In other

cases, replace subassembly H1.

2. Increase of operating current due to moisture or rust on the blades, pointer needle coupling parts, etc.. The operation will be recovered after removal of moisture, but there is the fear of rusting afterward. ... Repair: Make replacement of subassembly H1, When they rust.

4-5. Drop off, bending or catch of pointer needle

In the case of drop off or bending, replace subassembly H1.

In the case of bending or catch, make correction so far as possible.

4-6. Drop off the retaining screw for needle lever shaft

Repair: Refasten the screw.

4-7. Drop off of scale plate

Repair: Replace subassembly H1.

4-8. No operation of pointer needle due to damage, loss or disengagement of coupling needle spring

Repair: Replacement of the part and reassembly.(No adjustment is needed)

4-9. Poor accuracy

1) Poor CdS. ... Repair: Replace CdS.

2) Poor adjustment of servo-amplfier or poor amplifier itself. ... Repair: Perform MD-1 and make adjustment by means of semi-fixed resistors R_A and R_D on servo-amplifier circuit plate #1514. (Fig. 19) In the case of poor amplifier, replace subassembly H1, following the "Replacement" described in 4-2..

4-10. Other disorders of EE mechanical part #1513

Repair: Replace the subassembly H1.

4-11. Even though no anomaly is found in EE mechanical part #1513, the aperture is left fully closed or fully open, or does not operate. Disorder of servo-balancing semi-fixed resistors R_A and R_D by a well adjusted amplifier subassembly H2. Turning the semi-fixed

resistors, bring the illumination of the image plane to the fiducial one. (Fig. 19)

5. FR change-over

5-1. No operation with FR change-over switch

Poor contact between FR change-over switch plate #353 with FR switch contact spring #354.

Remove the large cover and FR operating plate #301, referring to MD-1 and -5.

Separating at two positions snap rings #376 from FR operating plate axle #355, remove washers #375 and FR change-over switch plate #353. Make the contact pressure of contact spring #354 within the range 50 — 70g. (Fig. 7)

5-2. Difference in film feed (the number of picture frames) between F and R runs

Unscrewing tapping screw #383, adjust the position of feed limiting contact mount #349 (Fig. 7). Thereafter, repeat F and R operations 5 — 6 times, each, to see that 0 — 3 frames film feed difference takes place. Using the inspection tool "Cine-Camera Counter", see that $100 \begin{smallmatrix} +0 \\ -3 \end{smallmatrix}$ picture frames are fed in both F and R runs.

5-3. Poor operation of FR clutch gear #339

Incorrect engagement depth of take-up gear #368 or incorrect engagement depth of feed limiting gear #346.

Adjustment:

1) Perform MD-1 and 5.
2) Unscrew three attaching screws #386x2 and #378x1 to remove FR printed circuit #352
3) Eccenter FR clutch gear adjusting pin #343 to adjust the engagement (Fig. 7)
4) To adjust the engagement depth of feed limiting gear #346, bend the protruding part A of FR base plate #321.

5-4. Replacement of FR operating subassembly A27

For disassembly, refer to MD-1 and MD-5.

After reassembling, check each of FI, FO, OL, DE and R operations, referring to MC-5.

5-5. Replacement of FR drive subassembly A21 and FR printed circuit A24

For disassembly, refer to MD-1 and -5.

Unsolder lead wires #59-ヨ, -ナ, -ム, -ウ, -ニ, #2087a and motor cord "white". (Fig. 22)

Unscrewing four screws #386 x 2, #378 and #379, remove the FR drive subassembly A21 and FR printed circuit A24 for replacement. (Fig. 7)

After reassembling, check each of FI, FO, OL, DE and R operations and each of operating current within 35mA.

5-6. Anomalies in FR operations

a. F or R is repeated: but the film does not advance farther

Incorrect OFF positions of feed limiting contacts #350 x 3 at F and R.

b. Feed limiting gear #346 does not stop at 100-frame run

Poor engagement of feed limiting gear #346 with FR clutch gear #339.

c. With the take-up spindle held, F does not operate

This being due to poor clutch lever B spring #345, replace subassembly A21.

d. FI, FO or OL does not operate sometimes

Check for the engagement of counter 1st worm wheel #162 with the counter worm #114.

6. Power zoom subassembly

6-1. Shortcircuit of PZ switch subassembly D3

Incorrect contact clearance

The lead wire is held in or touches with cord clip #65.

6-2. No operation at S (slow speed).

Too deep engagement of PZ motor gear #2725.

Poor motor gear #2725. Make replacement.

6-3. Incorrect return of PZ switch button #2737

Constrain of the button against large cover #2004.

7. Shutter blade opening

7-1. Incorrect shutter blade opening

Refer to MD-1 and -5 for disassembly

By changing the eccentricity of VS action pin #329, attached to VS rack #328, adjust the operating angle of sector blades. (Fig. 7)

See that the opening angle is within the standard given in Chapter. IV-26, and no remarkable displacement of opening angle indicating red signal plate #218 occurs in the finder, until shutter click spring #324 clicks into VS rack #328.(Fig. 7 and 15)

Be sure of an overlap of 1mm of the blades, and of not fully closed shutter in the reversal run.

7-2. At OL, shutter blades #118 are not fully closed

Check for the engagement of counter 1st worm wheel #162 with counter worm #114.

Check for an overlap of 1mm of the blades at fully closed position.

If they are not closed at the fully-closed position, make adjustment by means of VS action pin #329. (Fig. 7)

7-3. At R operation , shutter blades #118 open

It being due to poor shutter shaft gear #120, replace subassembly A4.

7-4. Catch of VS red signal plate #218

Constrain between VS signal lever coupler #217 and finder lens barrel, lead wire, etc..

7-5. Incorrect movement of VS red signal plate #218 at FI, FO, etc.

a. Correct the setting position of VS red signal plate #218 by means

of VS lever eccenter #224.

b. Correct the operating range of VS red signal plate #218 adjust VS auxiliary signal lever #222 by means of releasing the screw #261.

c. Correct the attaching position of FR base plate #321.

8. Running speed dial

8-1. Unstable metering of exposure, when setting the exposure correct dial #415 or running speed dial #412.

Short circuit of ASA resistor brush #447 between resistor attaching ring #414.

8-2. Twitch of the meter needle as the running speed is changed

ASA resistor brush #447 by excessive soldering of ASA resistor brush holder #417 comes in contact with the head of fastening rivet #445, by which ASA resistor #2461 is attached.

9. Automatic ASA film speed setting

9-1. Incorrect operation of ASA slider #409

a. Too much stretching, cutting off, or detaching of synthetic string #446 from the pulley.

b. Presence of foreign substances between the gears for ASA bobbin #403.

Perform MD-1, -2, and -7 for disassembly. To remedy too much stretching of string #446, wind up the upper part of the string slightly slackened and the lower part slightly stretched.

Remove foreign substances, if exist. (Fig. 13-B) After reassembling, operate the slider 5 - 10 times to makes sure of the correct operation.

9-2. ASA does not change with film running speed

Replace running speed dial unit E3 as follows:

1. Perform disassemblies MD-1, -2, -3, -4 and -7.

2. Unsolder lead wires #1087h, -ℓ, -r, -w and -y from servo-amp.

printed circuit, and lead wires #1087k, -m, -n and -v from battery checker printed circuit #1271. (Fig. 19)

3. Unscrew four screws #1489 x 3, #1491, remove running speed dial base. (Fig. 10-A)

4. After replacement, check the back-focus, change-over and ASA setting.

10. Change-over of the filters coupled to the type of film cartridge

10-1. Taking picture in daylight, using daylight film

When the daylight film cartridge which has no notch is deposited, A-filter #1479 should swing out of the optical path of the taking lens, and showing no vignetting with its holder, when the cartridge is removed back, the A-filter is centered to the optical axis. If not, releasing two attaching screws #1489, move filter base plate #1482.

10-2. Taking picture in artificial light, using type-A film

When inserting the filter key #458 into the lighting slot, A-filter #1479 should swing out of the optical path of the taking lens. So, see that A-filter #1479 is completely ejected out of the optical path, showing no vignetting. At this time, AD change-over lever #1464 is not move, and contact with AD change-over contact #1471 on the condaction part of AD printed gircuit #1465.

Be careful in handling the A-filter not to scratch and not to leave fingermarks, grease, etc. on the surfaces.

11. Poor contact of electronic flash terminal (synch.-socket)

11-1. Poor soldering of the synch.-socket.

11-2. Poor adjustment of synch-contacts A #188 and B #189

11-3. Dust, foreign substances or the like attached to contact points of the contacts A #188 and B #189.

Perform diassembly referring to MD-1. For adjusting the contacts

A and B, detach cartridge chamber bottom plate #15, and move set screw #253. (Fig. 10)

Clean the contact points to remove dust or the like.

See that current is conducted once by one rotation of claw camshaft #109.

12. Poor current conduction of tape recorder terminal

12-1. Poor soldering of tape recorder terminal #157 (synch.-socket)

12-2. Poor adjustment of the clearance of the terminal from contact spring #150.

Improve the soldering, after disassembly following MD-1.

Peel off leatherette #11 from the camera back and adjust the contact clearance.

Make sure of the current conduction, when the shutter release button is ON.

Chapter II

Methods of Disassembly

The disassembly prosedures, so far as necessary, are given as references for Chapter I.

For reassembly it suffices to reverse the disassembly procedure.

Only some cautions to be taken in reassembly are noted below:

MD-1. Large cover

a. After peeling off dial cover plate #1507, unscrewing screw #1508, remove EE lock/Manual dial #1506.

b. Peeling off part of large cover leatherette #1071, and unscrewing 5 screws #1090e, remove large cover #1009. (Fig. 1)

Note: Be carful not to miss eyepiece shutter control #47.

MD-2. Small cover

a. After peeling off running speed dial plate #1474, unscrew 2 screws #457, remove running speed dial #412. (Fig. 2)

b. After peeling off part of small cover leatherette #1072, unscrew 4 screws #1090b, remove small cover #1005.

Note: When reassembling the running speed dial and the exposure compensation dial, take care of the positions of their pins. Do not forget to reassemble the running speed lock button #434.

MD-3. Front upper cover

a. Perform MD-1 and -2.

b. After opening cartridge chamber door #6, unscrewing 4 screws (#1090a x 2, #1091a x 2), remove front upper cover #1007. (Fig. 3)

Note: When taking off the cover, do not miss checker button #1278. Protect meter scale illuminating window #1084 from scratch and dust.

MD-4. Front lower cover

a. Perform MD-1 and -2.

b. Unscrewing 4 screws #1090a, remove front lower cover #1008.

Note: Do not scratch front cover joint plate A #1075, plate B #1076 and C #1077 which are adhered to the lower cover.

MD-5. FR operating plate

a. Perform MD-1

b. Unscrewing 5 screws #385, remove FR operating unit #301 and others. (Fig. 4)

Note: After reassembling, make sure of the engagement of the fork of FR change-over switch plate #353, as well as engagement of the fork of PF lever B #323 with the protrusion of OL control knob #313. (Fig. 4)

MD-6. Grip

a. Remove grip cover #802, unscrewing grip cover lock screw #837, and take out battery carrier #846.

b. After peeling off grip bottom plate #845, unscrew 2 screws #867, and screw #868, remove grip casting #1801. (Fig. 5)

c. Unsolder lead wires #59-ハ, -ホ, -ル, -ネ and #1089b, -i, -p, -s each connected to remote control connector #858, main EE switch printed circuit #812 and PZ speed printed circuit #815. (Fig. 11, 18 and 19)

Note: When unsoldering the lead wires, take care not to separate other soldered parts and touch other parts.

When reassembly the grip, interpose strap holder #50 under the camera body #1 and fasten up two screws #867, beforehand.

MD-7. Lens casting

a. Perform MD-1 — MD-4

b. Unsolder lead wires #1087b, -f, -h, -i, -p, -r, -s, -w, and -y connected to servo-amp. printed circuit #1514 and TW(ON, OFF) switch contact #703 from the circuit plate. (Fig. 18, 19)

c. Unscrewing 4 screws #1090c, remove lens mount casting #1003. In detaching, be careful not to miss B.f adjusting washers

#1659 inserted into each screw position. (Fig. 3)

Note: For protection from dust, put the lens casting subassembly in a glass case after it is removed.

Do not touch the pointer needle of servo-EE, diaphragm blades, manual lever, and semi-fixed resistor for zero-balance amplifier. When reassembing, take caution not to have the cords interposed and caught by the operating parts.

After reassembling, make sure of focusing infinity coincidence and no parallax.

MD-8. Intermediate casting

a. Perform MD-1 — MD-4.

b. Unsolder lead wires #1087e, -k, -m, -n, -v connected to battery checker printed circuit #1271. (Fig. 19)

c. Remove grip cover #802 to take out battery carrier #846. Peel off grip bottom plate #845. Unscrewing 2 screws #867 on the front part and screw #868 on the rear part, remove grip casting #1801. (Fig. 5)

d. Unsolder lead wires #1087b, -i, -p, -s connected to remote control connector #854. (Fig. 19)

e. Unscrew 4 screws #1090c x 2, #1090d x 2, remove intermediate casting #1002.

Note: The lead wires soldered to checker printed circuit are to be bundled under the cord clip #65, which is attached with screw #1287.

Chapter III

Checks and Tests

Checks and tests to be made after reassembling each subassembly are as follows:

(MC: Method of Checking)

MC-1. Conduction and insulation

1-1. Conduction

Putting a tester leads between the plus (+) and minus (-) terminal of the grip battery cassette receptacle, check for positive conduction of current, when depressing the shutter release button.

1-2. Insulation (Leak current)

a. Under the same voltage (9^V) is applied as with 6 penlight batteries loaded, measure the current between the terminals on the grip battery cassette receptacle, with the shutter release button set to OFF. The current should not be over 3 μA at 9^V.

b. Load the mercury batteries and measure the current between the terminals on the mercury battery holder unit, setting the shutter release button to OFF. The current should not be over 1.5 μA at 2.6^V.

MC-2. Driving of motor

a. Deposit the battery cassette into the grip.

b. depressing the shutter release button 6 — 10 times to make sure of driving.

c. Load the camera with film, and check for the correct normal and reversal running of the film.

(A see-through cartridge for demonstration can be used. However, when repairing poor feeding and disorders relating to the cartridge use a regular cartridge.

d. Depressing the power zoom button on T and W both sides each 2 — 3 times, check for the correct driving of motor.

e. Taking measurement, check for the correct feed current. (Refer to standard IV-10)

MC-3 Focusing, parallax and infinity (∞) coincidence of split images

3-1. Focusing

Inserting the mirror tool J15028 into the aperture, and using the back focus collimator J19019, see that focusing is correct within the range as given in Fig. 14 at three positions: tele, wide and intermediate.

3-2. Parallax

a. Using the picture angle projector J19018 and the test chart for optical axis and picture angle J18047 (Fig. 13, see that the aperture is centered no parallax to the mask within ± 0.21mm laterally and ± 0.16mm vertically on the aperture plane.

b. Using the same equipment as above, see that the inclination of the mask to the aperture is within 1°.

3-3. Infinity (∞) coincidence of split images

Using the collimator J19001, set the distance scale to infinity(∞) at f=70mm, and see that the coincidence error (including coincidence parallax) is within ± 20".

MC-4. Servo-EE accuracy

Use ASA adjusting tool J1503, image-plane photometer J19027 and brightness box J19020.

a. Among the ASA adjusting tools (dummy cartridges) J1503, choose the one corresponding the intended ASA film speed and load it into the cartridge chamber.

b. Set the exposure compensation dial to 0.

c. Set the distance scale to infinity (∞).

d. Set the focal length to f=30mm (as a standard).

e. Inserting filter key #458 into the lighting mount slot, swing away the A-filter out of the optical path.

f. Fully open the shutter open angle. Apply a regulated power ($3.5^V + 3.5^V = 7^V$) from the battery cassette to measure light brightness while the shutter is being driven.

g. Bringing the front surface of the zoom lens into close contact with the light-source window of the brightness box J19020, take reading of the indication of an image-plane luxmeter and meter indication in the finder.

measuring conditions				Aperture (f-number)	Image-plane Illumination (ℓx)	Allowance (EV)	Remarks
ASA	Running speed	Exposuer compen-sation	Brightness of subject (Cd/m²)				
A40	18	0	198	2.8	4.55	± 0.3	○
			793	5.6			
			3174	11			
	54	2		⚠ 2.8-2/5	54.65	± 0.6	
		1		⚠ 4-2/5	27.32	± 0.5	
	18	2		⚠ 5.6 ~~5.6~~	18.22	± 0.3	
	54	0		⚠ 5.6-2/5	13.66		
	18	1		8	9.11		
	24	0	793	⚠ 4-3/5	6.07		
A160	18	2		⚠ 5.6 ~~5.6~~	4.55		
	54	0		⚠ 5.6-2/5	3.42		
	18	1		8	2.28		
	24	0	198	⚠ 4-3/5	1.52		
	18			5.6	1.14		○
Displace the A-filter (insert the filter key)							
D25	18	0	793		7.29	± 0.2	
Difference of zooming							
A40	18	0	T → 793 W → "		4.55	± 0.3	
Forward and backward difference							
A40	18	0	Low → 793 High → "		4.55	± 0.2	

Note :

* A and D means the cartridges for the "Artificial light" and "Day light" type of film, which are identified by being provided or not with a filter notch, respectively.
* The plus (+) of the allowance indicates the direction toward f/2, and the minus (-) toward f/16.
* For the values corresponding to marked ○ in the column "Remarks", take measurement at least.

MC-5. FR operation

a. Deposit the battery cassette loaded with penlight batteries into the grip.

b. Check the operations of FI, FO, OL, DE and R, and the movement of the shutter opening indication in the finder, as well as, the movement by turning the shutter opening control dial.
At this time, running the camera, see the correct operations in fully opened and in fully closed state.

c. Check the operating current at each manipulation, keeping the running speed at 18 frames. The current should not be over 35mA for each of FI, FO, OL, DE and R operation.

Chapter IV

Reference Standards for Repair

1. Taking lens and finder

   No remarkable dust, dirt, scratch or the like is permissible.

2. Vignetting in the finder

   Attach a plate with a pinhole of 2mm in diameter onto the eyepiece. Viewing through the pinhole, move the eye laterally and vertically, whereby no vignetting should appear.

3. Film gate

   Insert a gauge of 8.02mm in width into the film gate. There should be a clearance on the upper side pressure plate.

4. Making sure of the indication (by the red mark) after filming has been finished.

Cartridge Chamber door	Cartridge	Film counter	Side pressure plate	Red mark
Opened	Unloaded		Disappears	Disappears
Closed	"		Set in	Appears
No relation to opening or closing	Loaded	0	Pressed	Disappears
"	"	0 — 50	"	"
Closed	"	E-mark	Set in	Appears
Opened	"	"	"	Disappears

5. Side pressure

   Upper side: 60 — 75g Lower side: 40 — 55g

6. Contact pressure of claw cam

   20 — 30g

7. Protrusion of claw

   0.28 ± 0.05mm from the base surface of aperture plate

8. Take-up torque

   45 — 60g·cm

9. Unload drive current

   7V, not higher than 130mA

10. Feed current (for 18 frames/sec.)

    7V, not higher than 250mA

11. Zooming current

    7V, not higher than 60mA

12. Increase of current by power fading

    In FO within 10mA, in FI within 5mA

13. Minimum battery voltage

    Penlight batteries : 7.2 ± 0.15V (with the lamp OFF)

14. Finder sight

    -5 — +3 Dptr

15. Infinity coincidence error of finder (including parallax)

    Within ± 20" at f 70mm Use 2mm pinhole

16. Inclination of finder mask to the image

    Within 1°

17. Light leakage

    No injurious light leakage is permitted at 5000 lux after 5 min.

18. Parallax

    Within 4% of the projected picture area

19. Moving of picture

    Within 0.02mm vertically and laterally on the film plane.

    No remarkable periodicity is permitted. Fluctuation of the focused plane: within 0.025mm

20. Displacement of picture frame center and of optical axis within 0.1mm.

21. Position of picture area on the film

Displacement of effective picture area from film perforations: within 0.13mm

Difference of picture plane in the reversal run from that in the normal run : within 0.2mm

22. Inclination of picture frame

With respect to the guide edge of film.

Horizontal : 90° ± 1/2°

Vertical : 90° ± 1/2°

23. Picture field size

With respect to projected picture plane at each focal length: 95 ± 3%

24. Focal plane

In front of the fiducial surface of pressure plate : 0.14mm

Rectangularity with respect to optical axis: ± 10′

25. Rewind length of film

100 $^{+0}_{-3}$ picture frames

26. Shutter opening angles.

Opening angle	Standard
Fully opened	160° $^{+0°}_{-10°}$
1/2 opened	80° ± 4°
1/4 opened	40° ± 3°
Fully closed	0° (Overlap more than 5°)

No remarkable displacement of the edge of the red indicator from the position of each notch in the finder viewfield is permitted, when the shutter opening control dial is turned to the position of each click.

27. Single frame exposure time

At 18 frames/sec. and fully-open shutter opening angle: 24.7 ± 3ms (1/40.5sec.)

Side view-I

Fig. 1

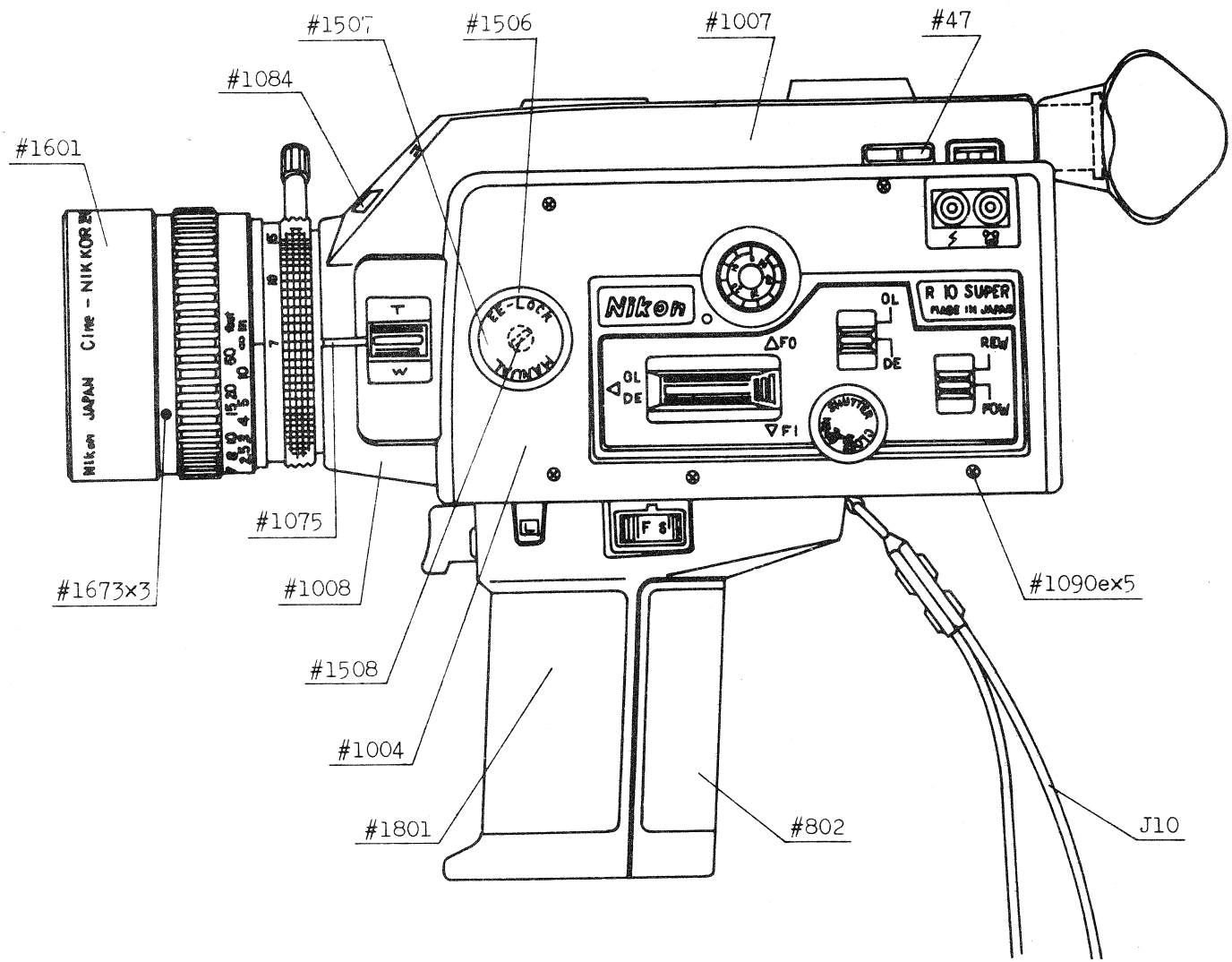

Fig. 1

7KB - R.1104.A

Side view-II

Fig. 2

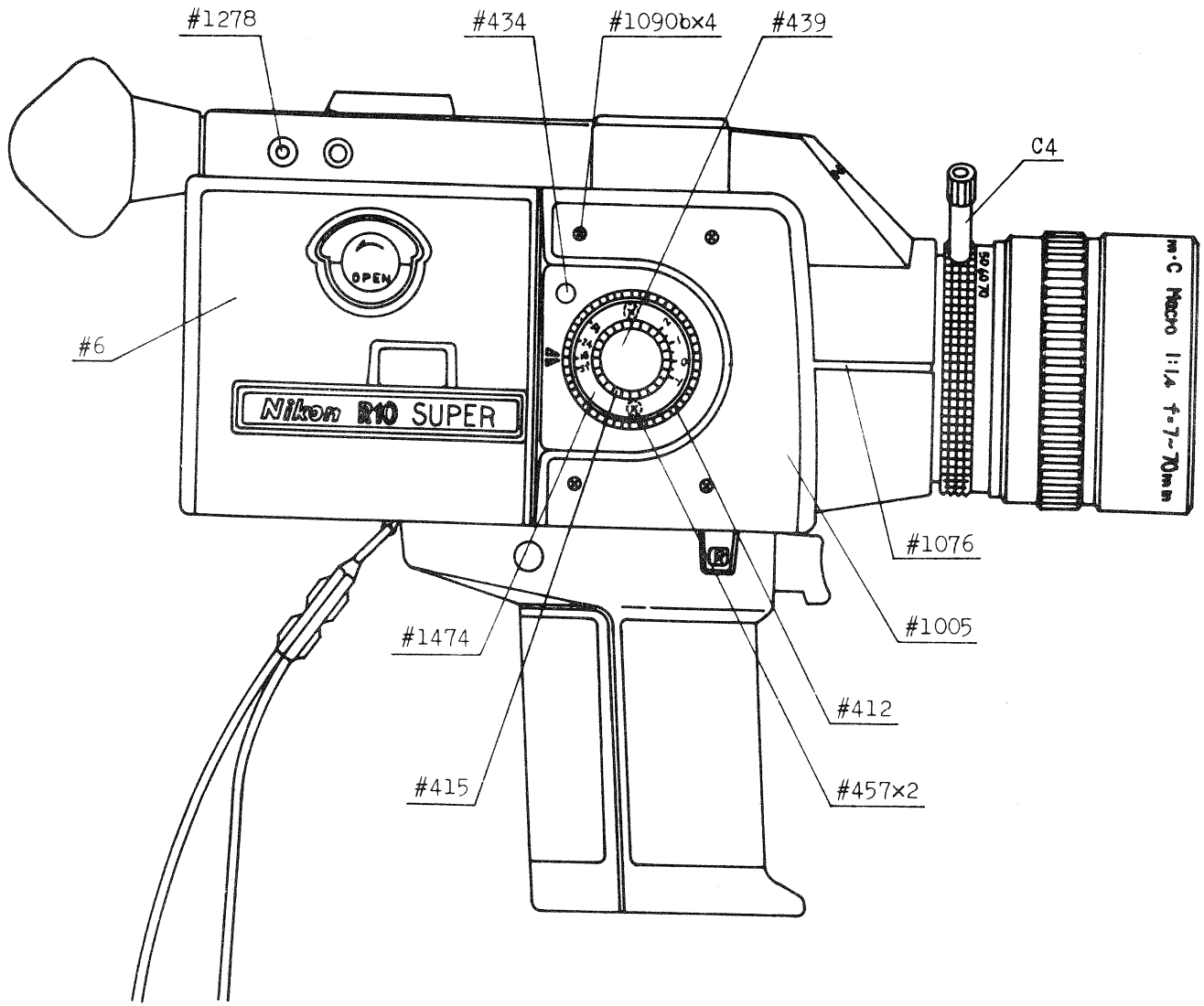

Fig. 2

View of large cover removed

Fig. 3

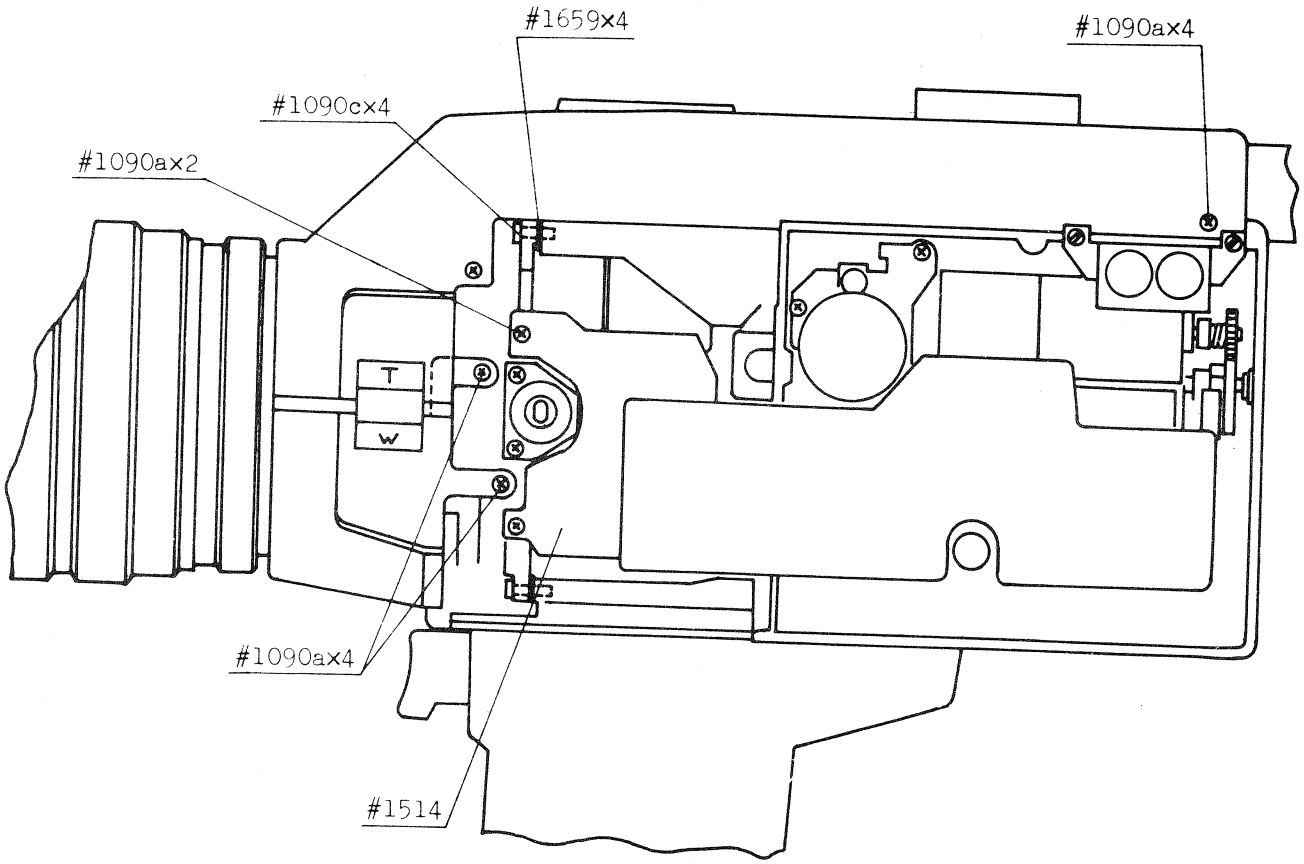

Fig. 3

FR operating unit

Fig. 4

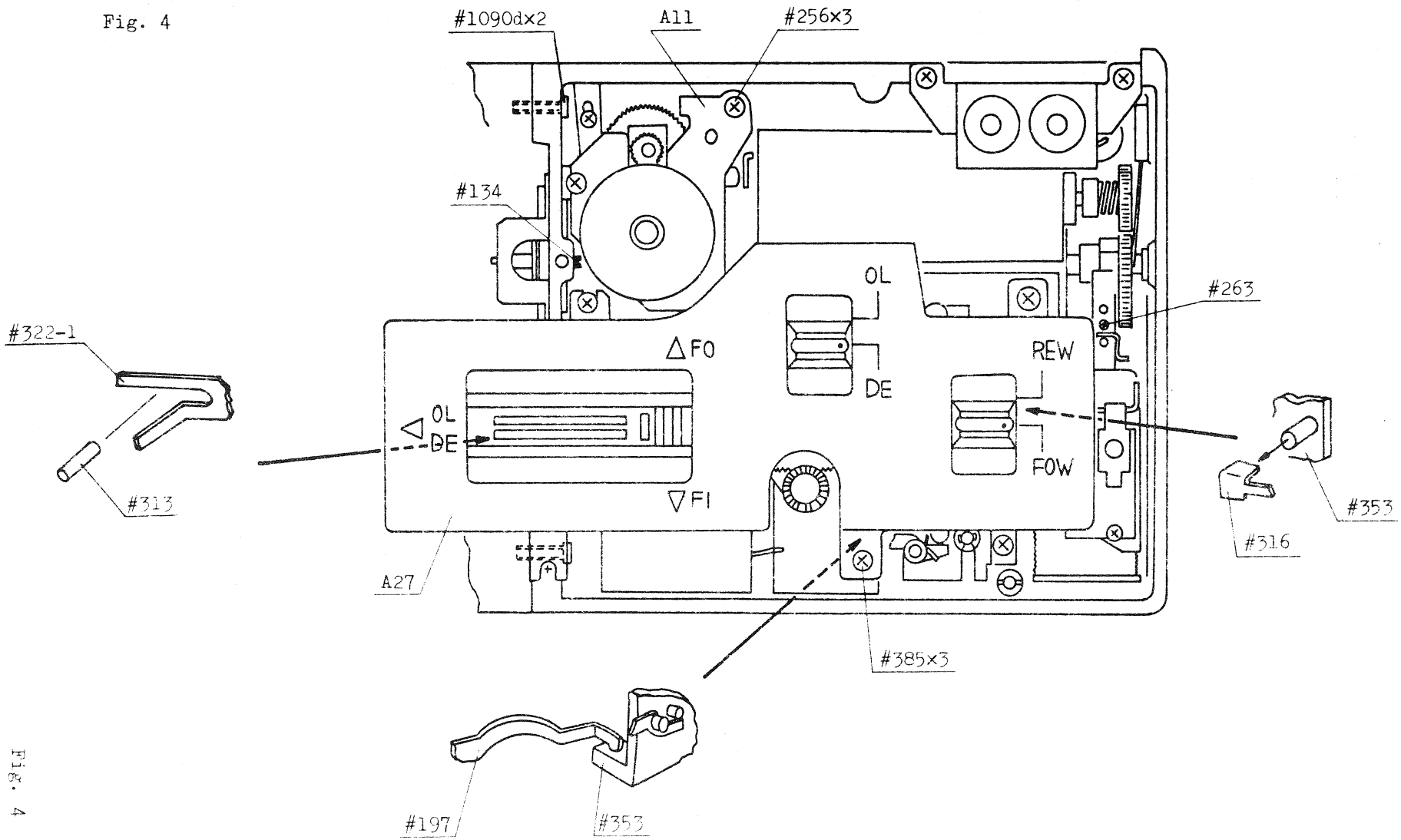

Fig. 4

Battery cassette
receptacle in the grip

Fig. 5

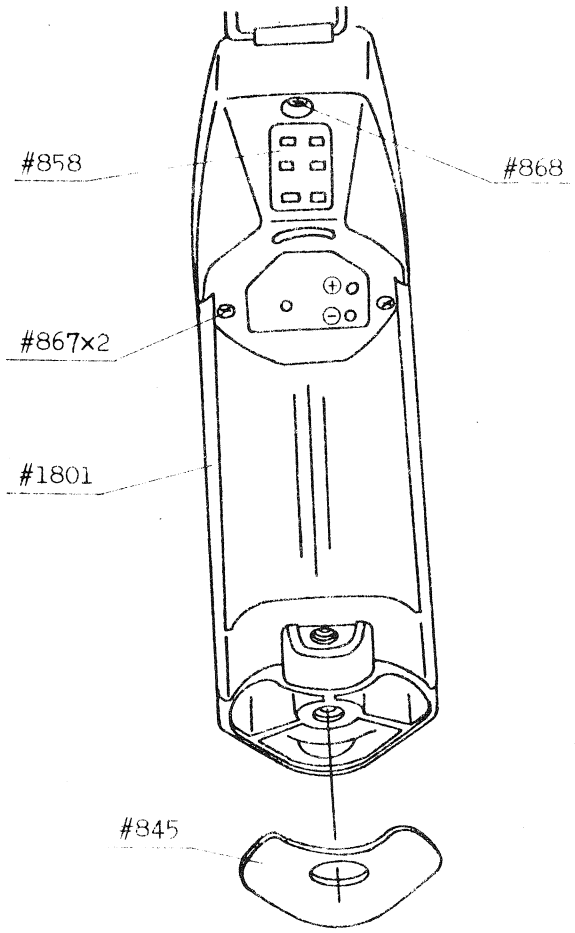

Front view of the body

Fig. 6

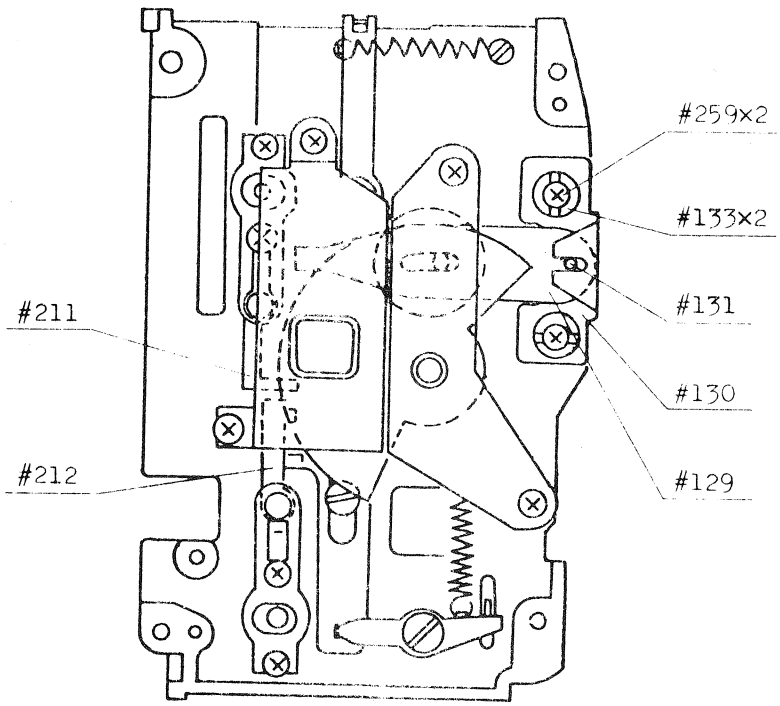

FR drive unit

Fig. 7

Take-up shaft

Fig. 7-A

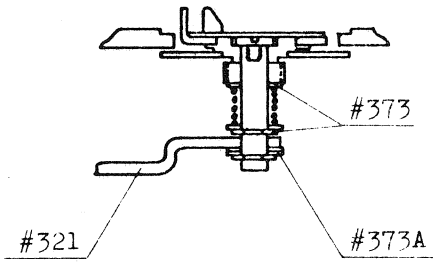

FR clutch lever

Fig. 7-B

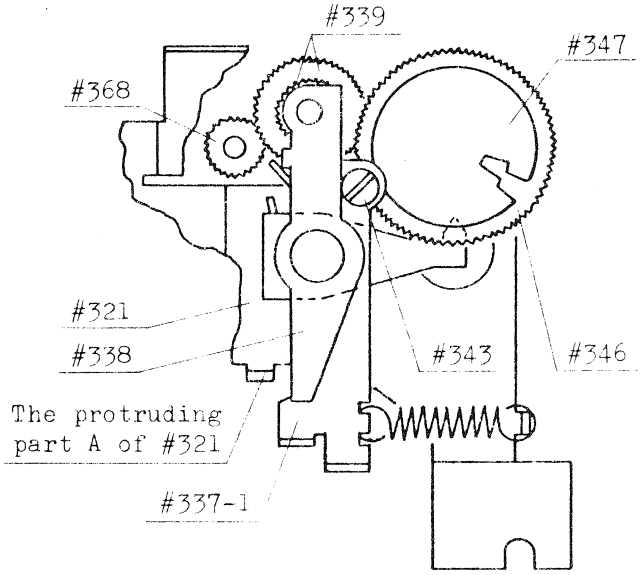

FR drive unit

Fig. 7-C

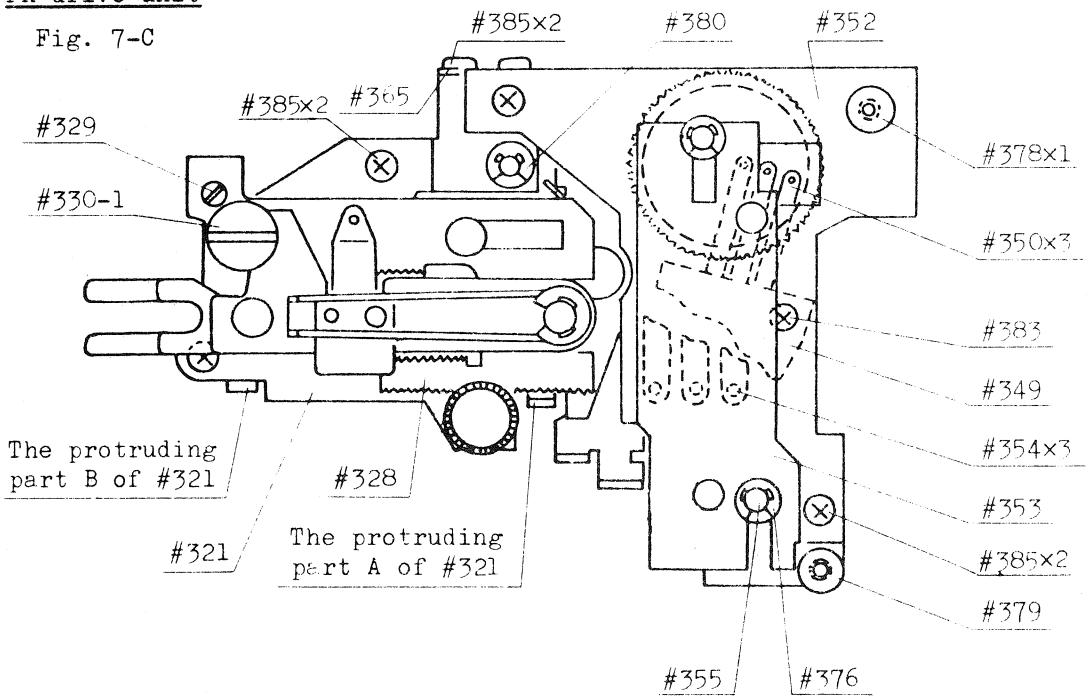

Lens casting

Fig. 8

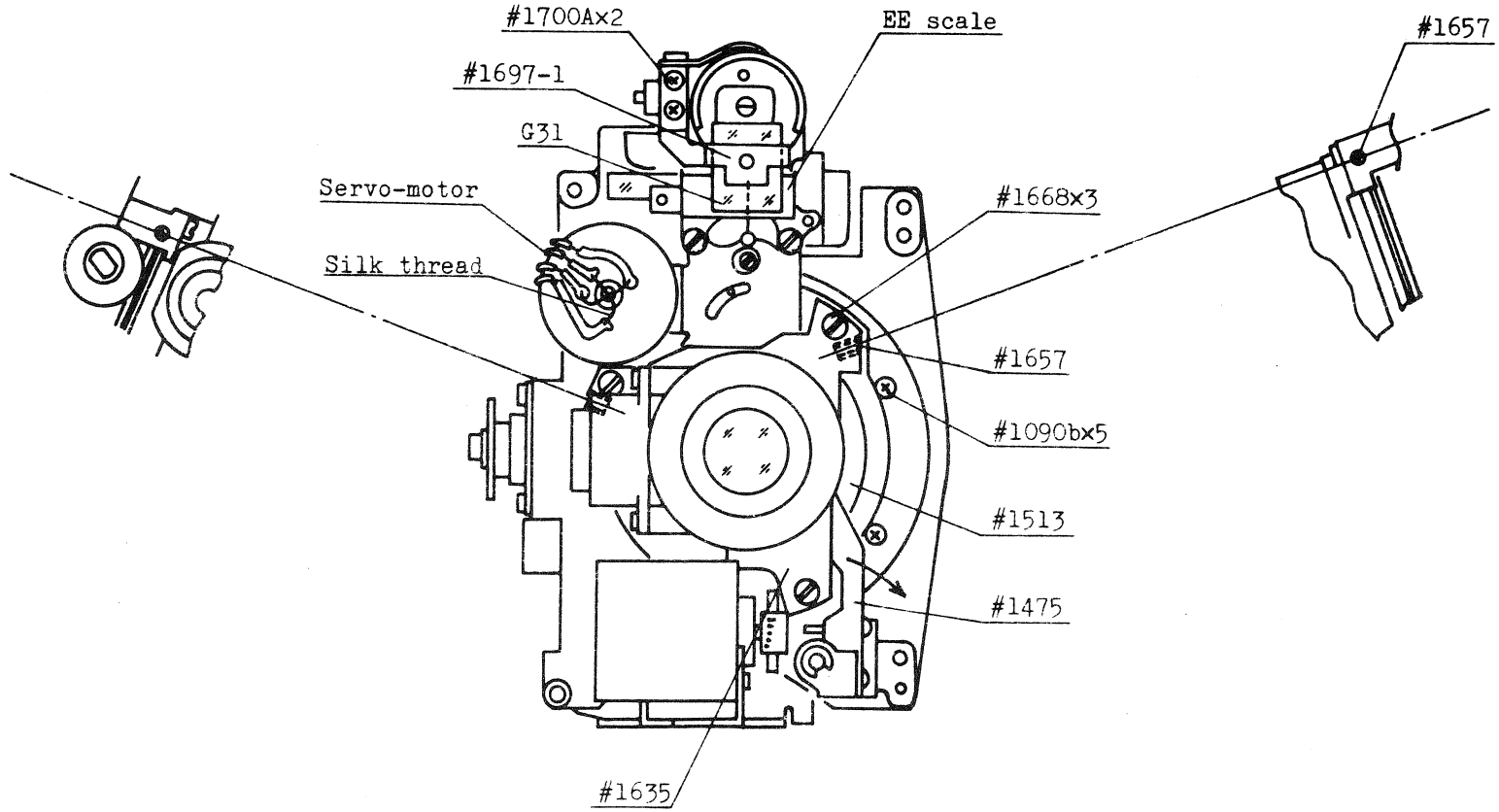

Fig. 8

Prism holder and cam-pin ring

Fig. 9

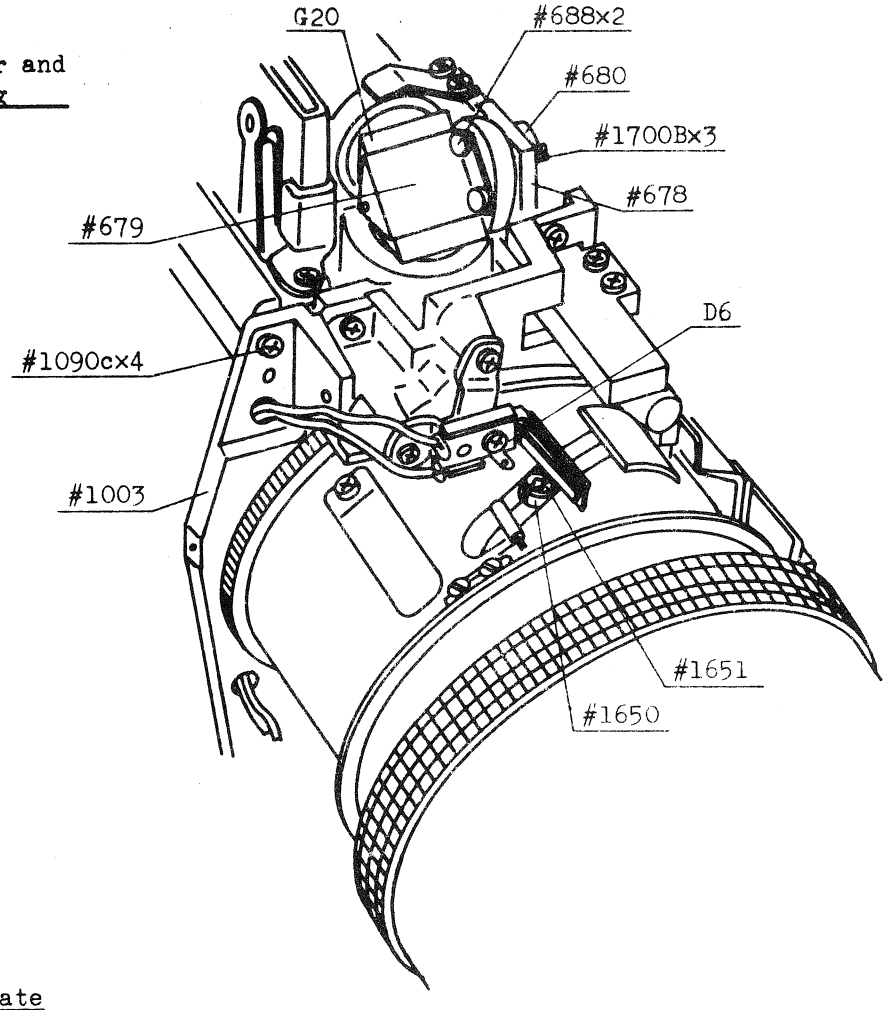

Aperture plate

Fig. 10

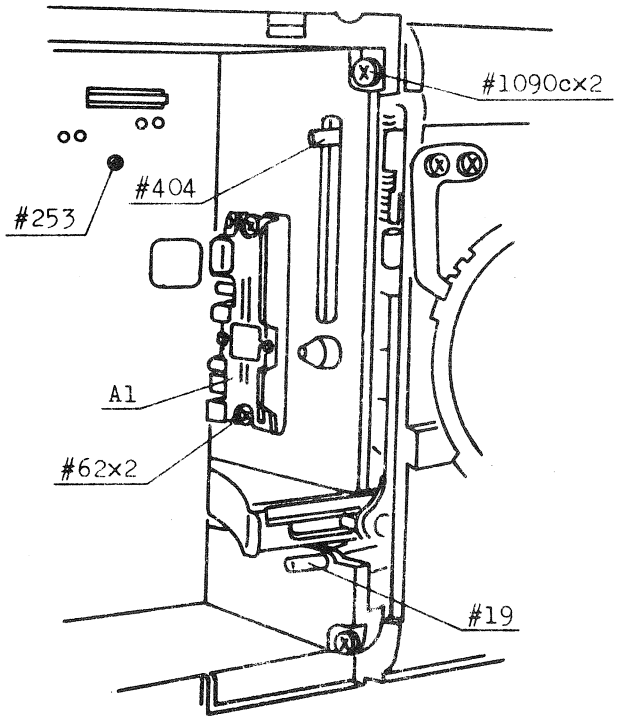

Running speed dial base

Fig. 10-A

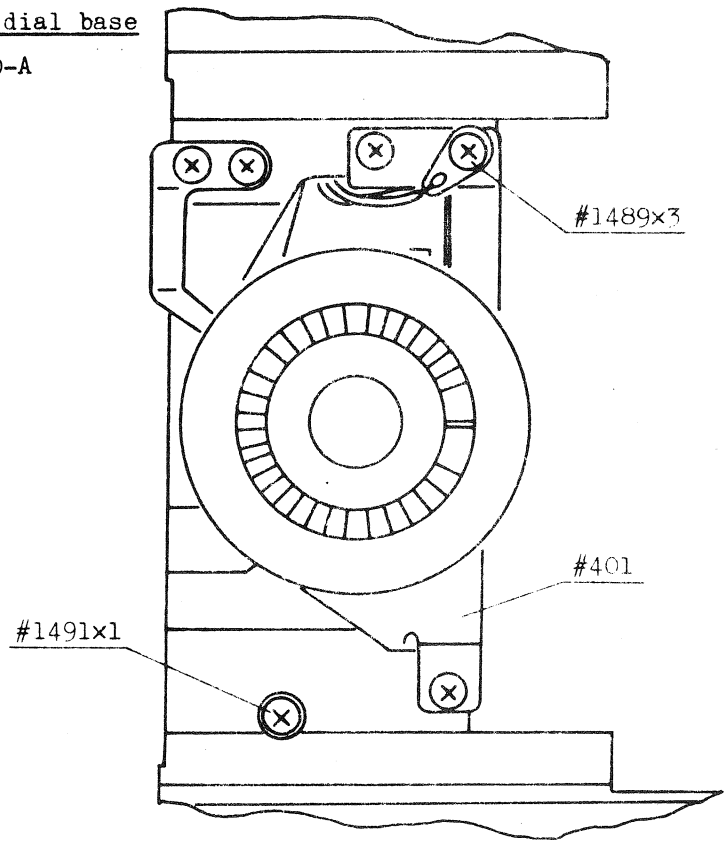

ASA setting
(string and pulley)

Fig. 10-B

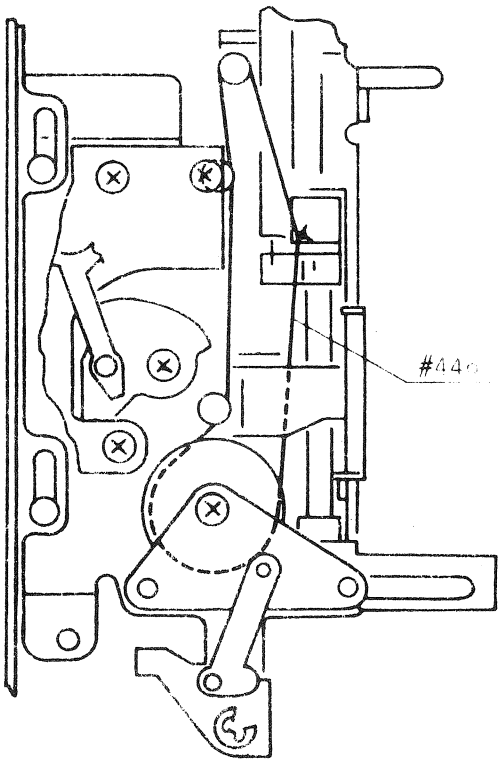

Switches on the grip

Fig. 11

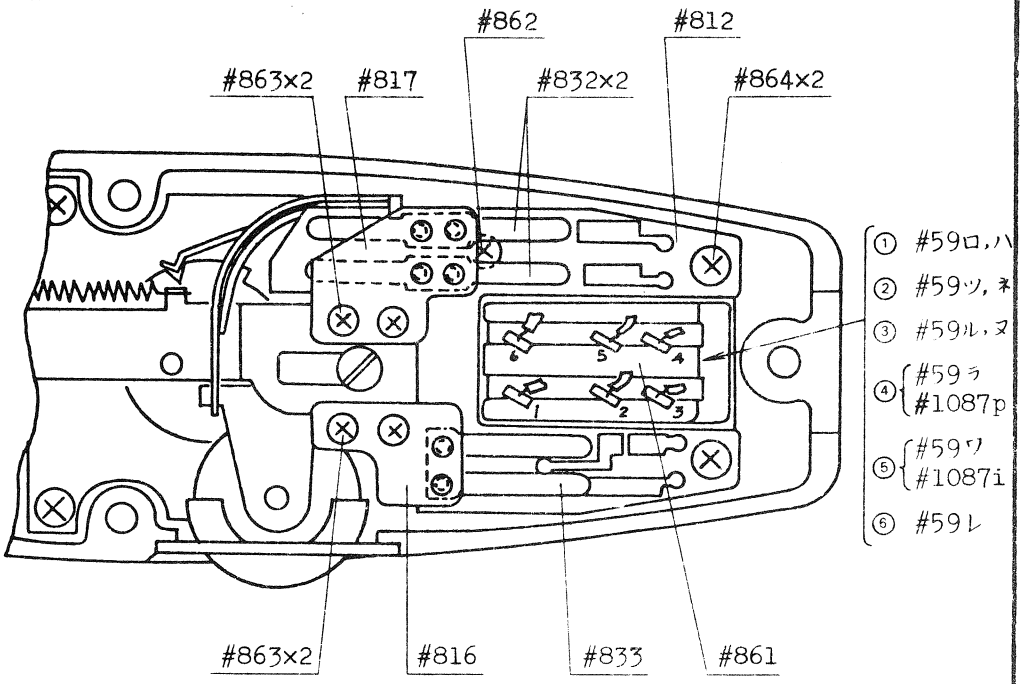

Finder viewfield

Fig. 12

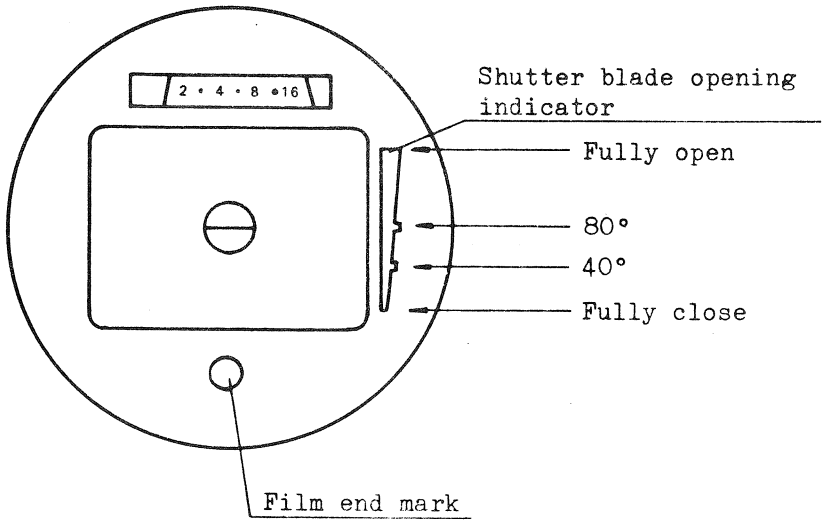

Test chart for optical axis and picture angle

Fig. 13

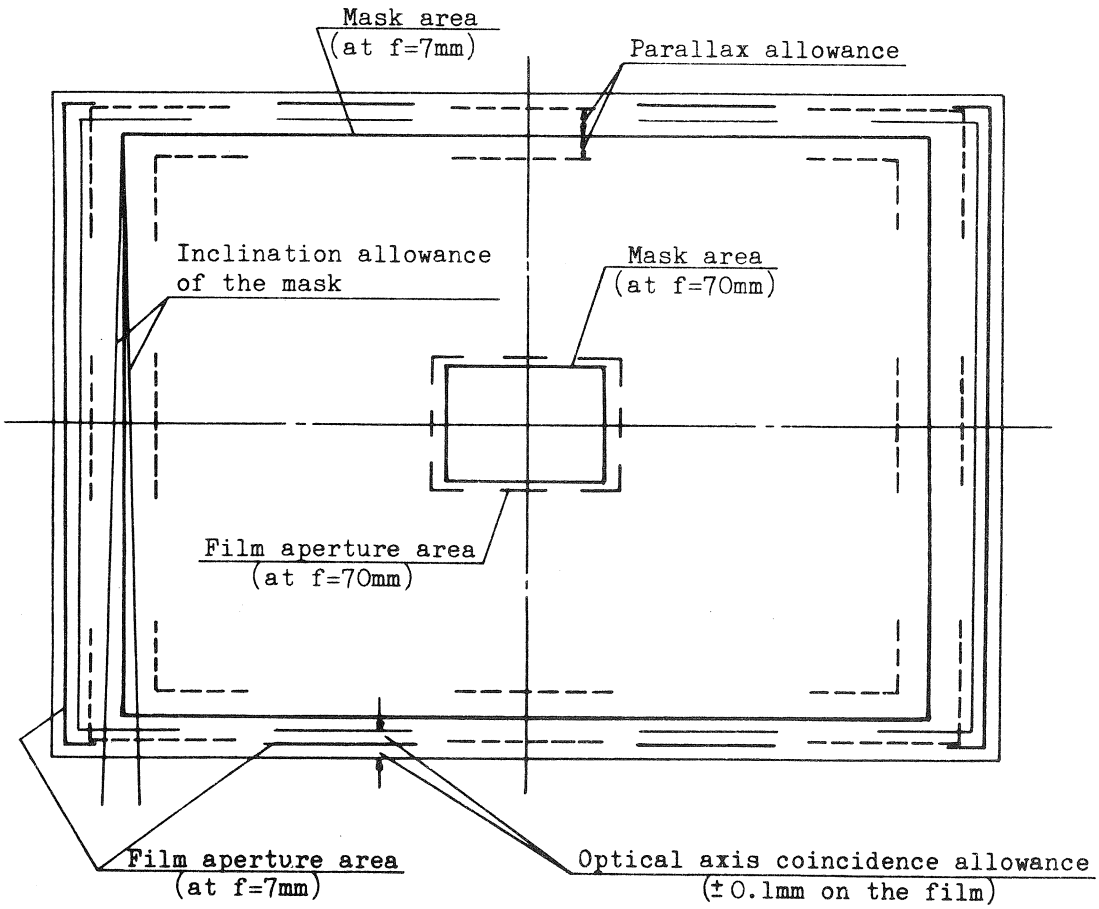

Back focus correction range
(case by lateral collimator)

Fig. 14

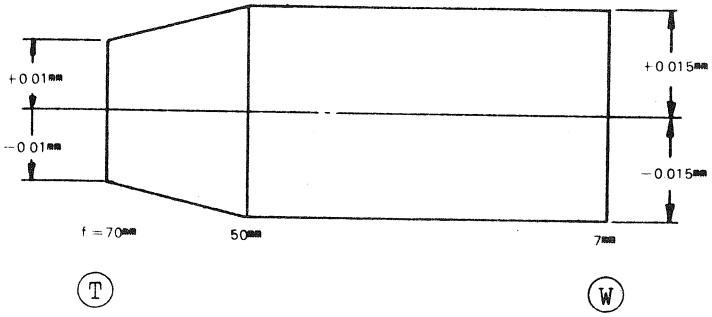

Aperture size on the film
(standard)

Fig. 15

Fig. 15-A

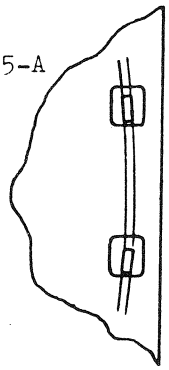

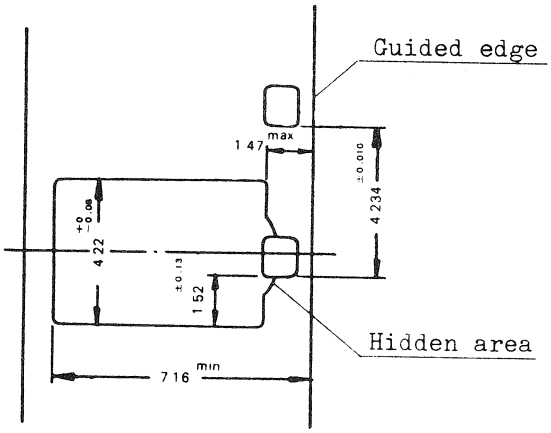

Cartridge

Fig. 16

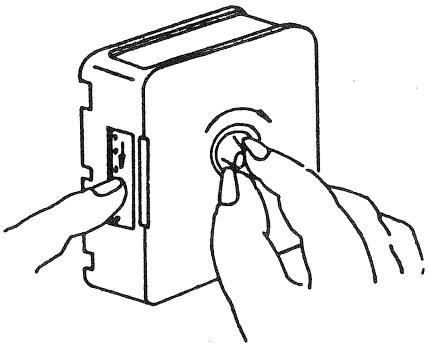

Relative position of the claw, film perforations and aperture

Fig. 17

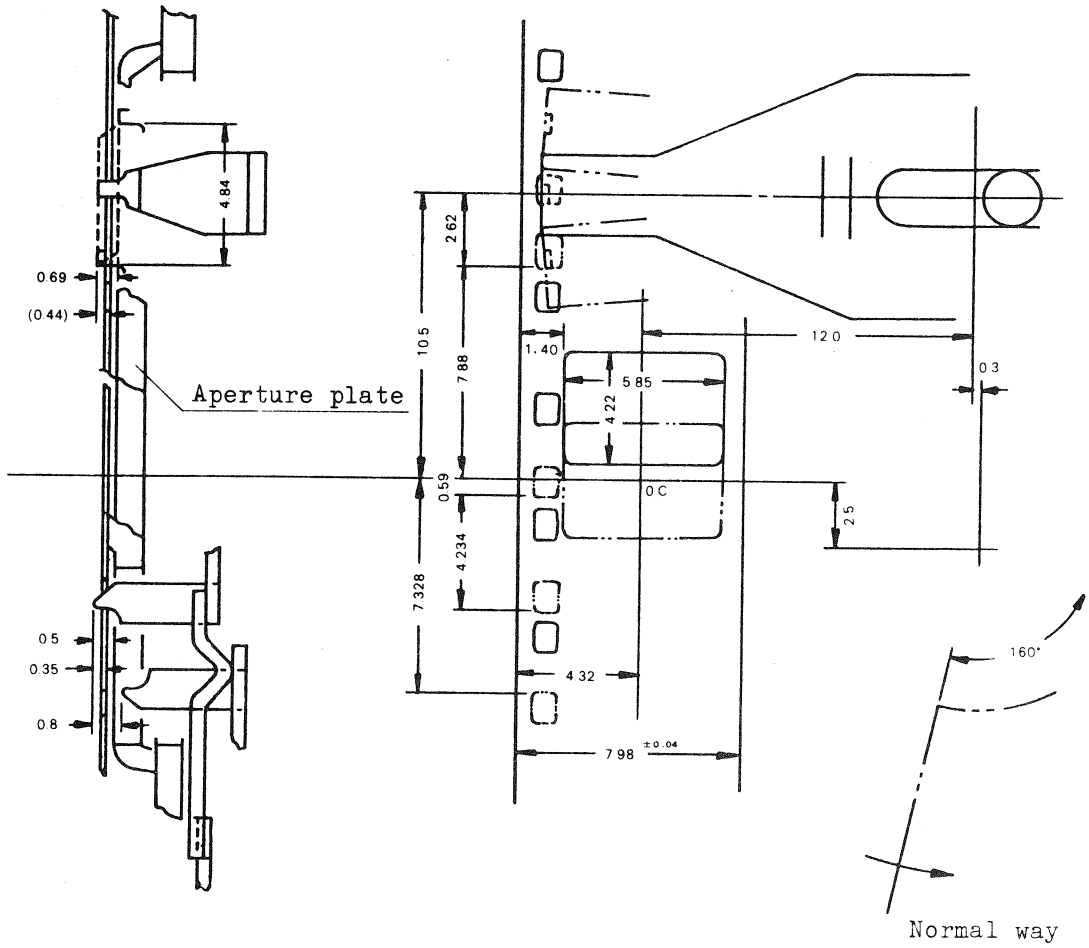

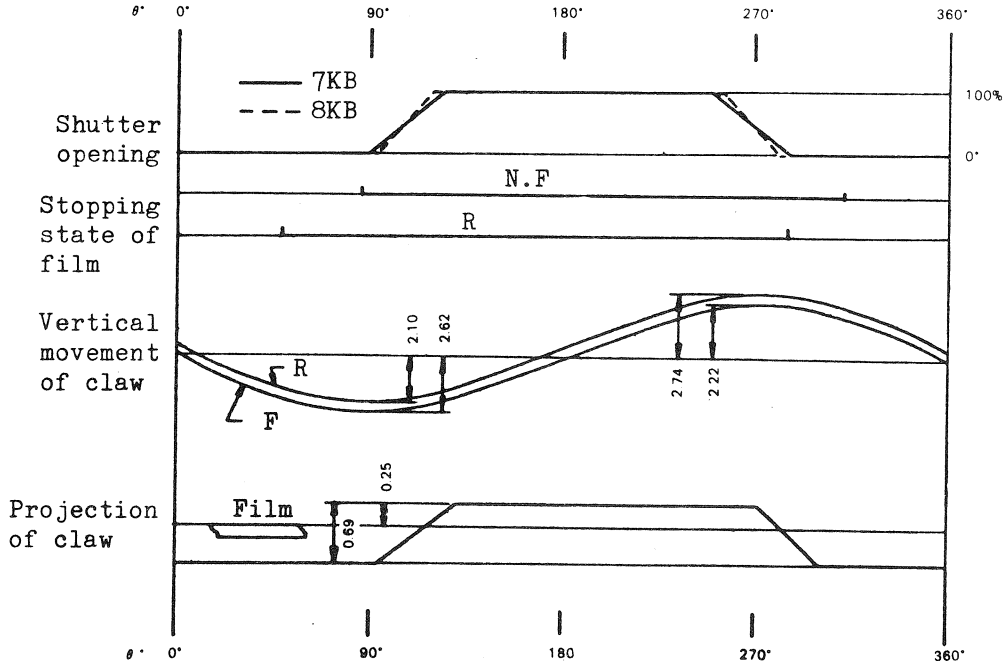

Circuit diagram

Fig. 18

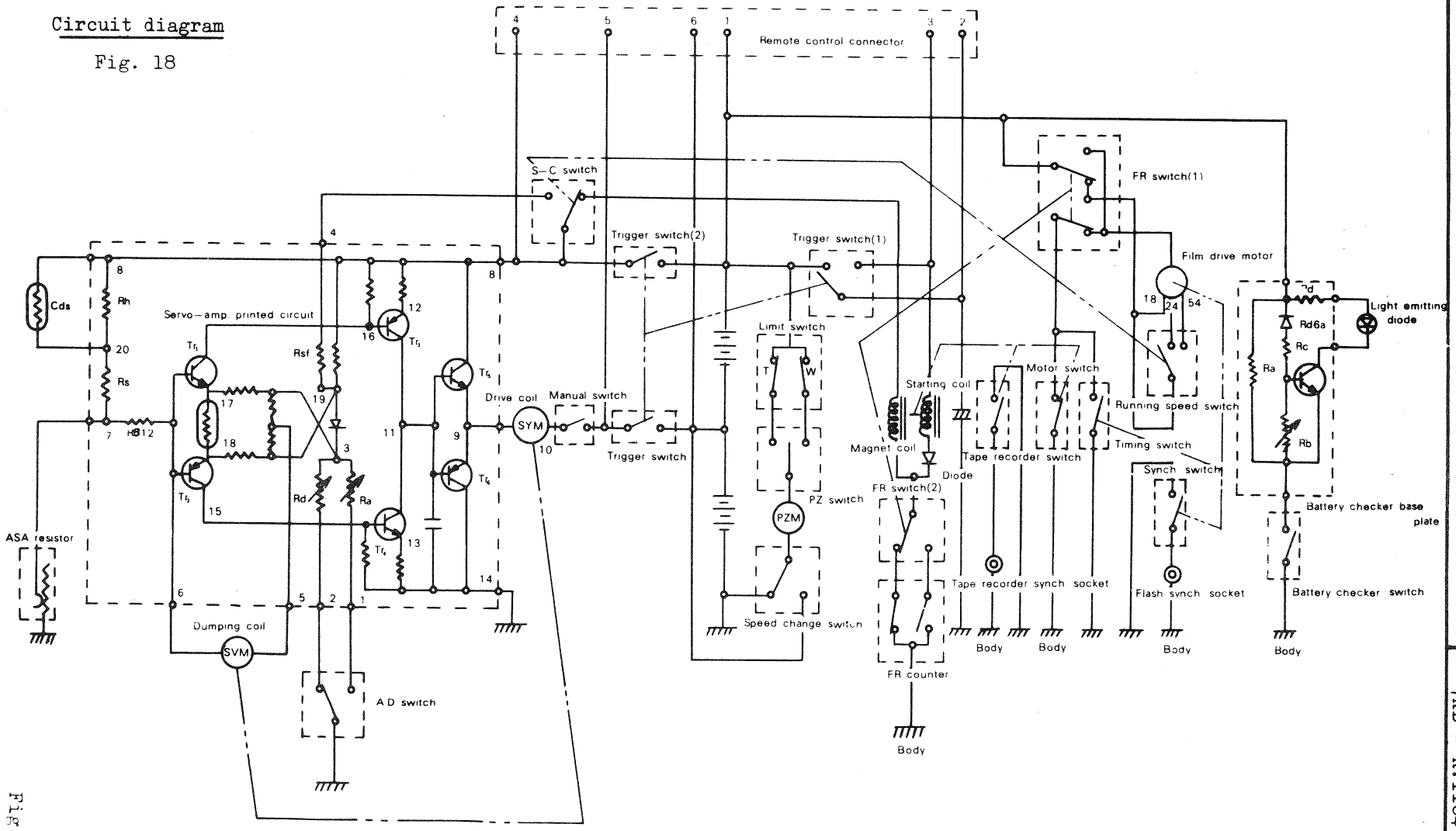

7KB - R.1104.A

Fig. 18

Wiring diagram

Fig. 19

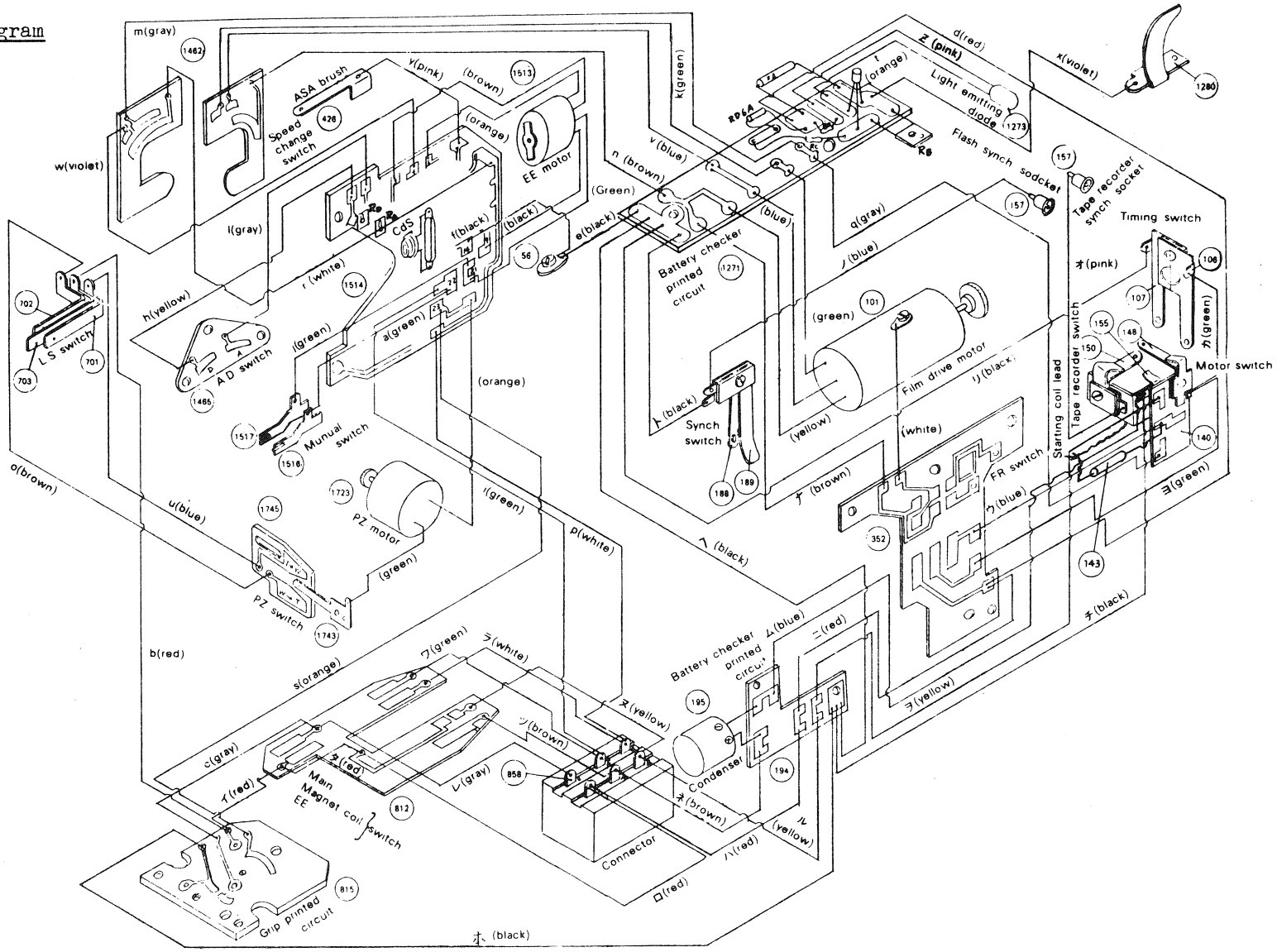

Fig. 19

Optical system

Fig. 20

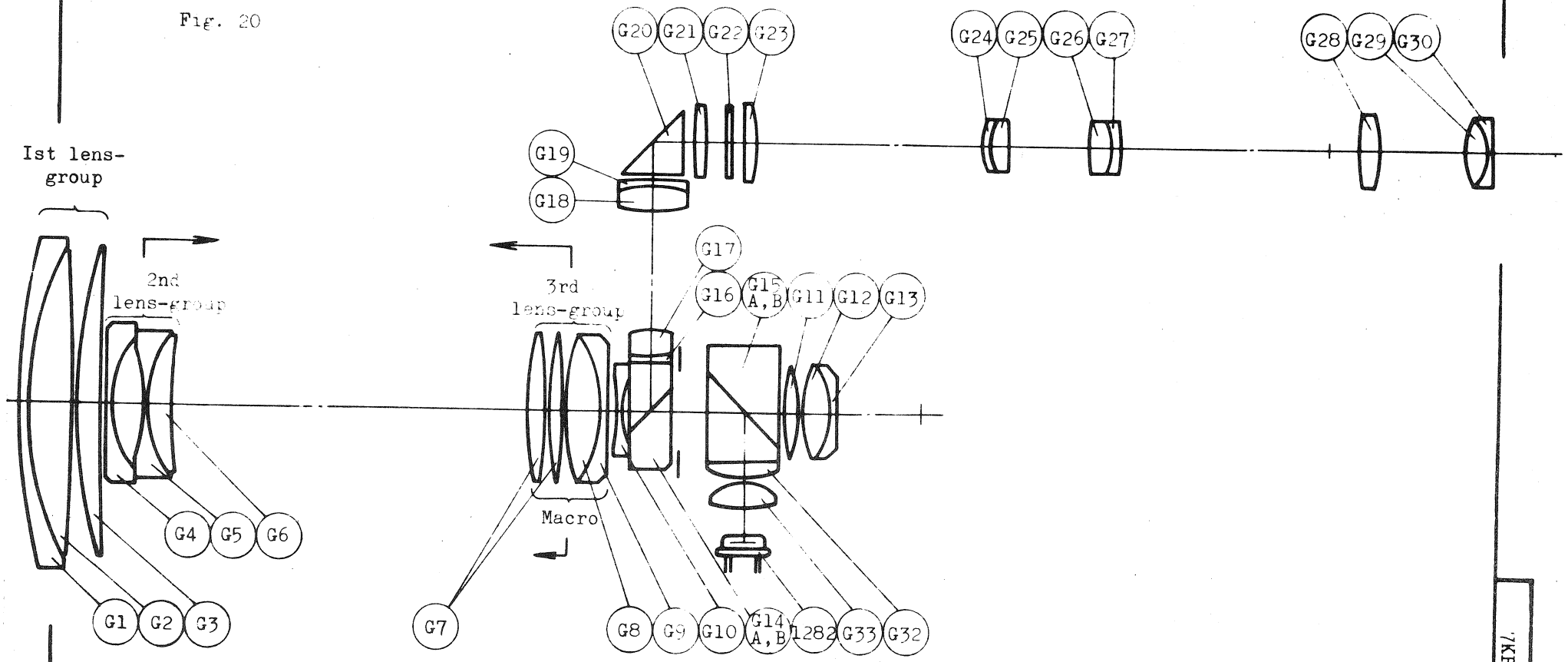

Fig. 20

7KB - R.1104.A

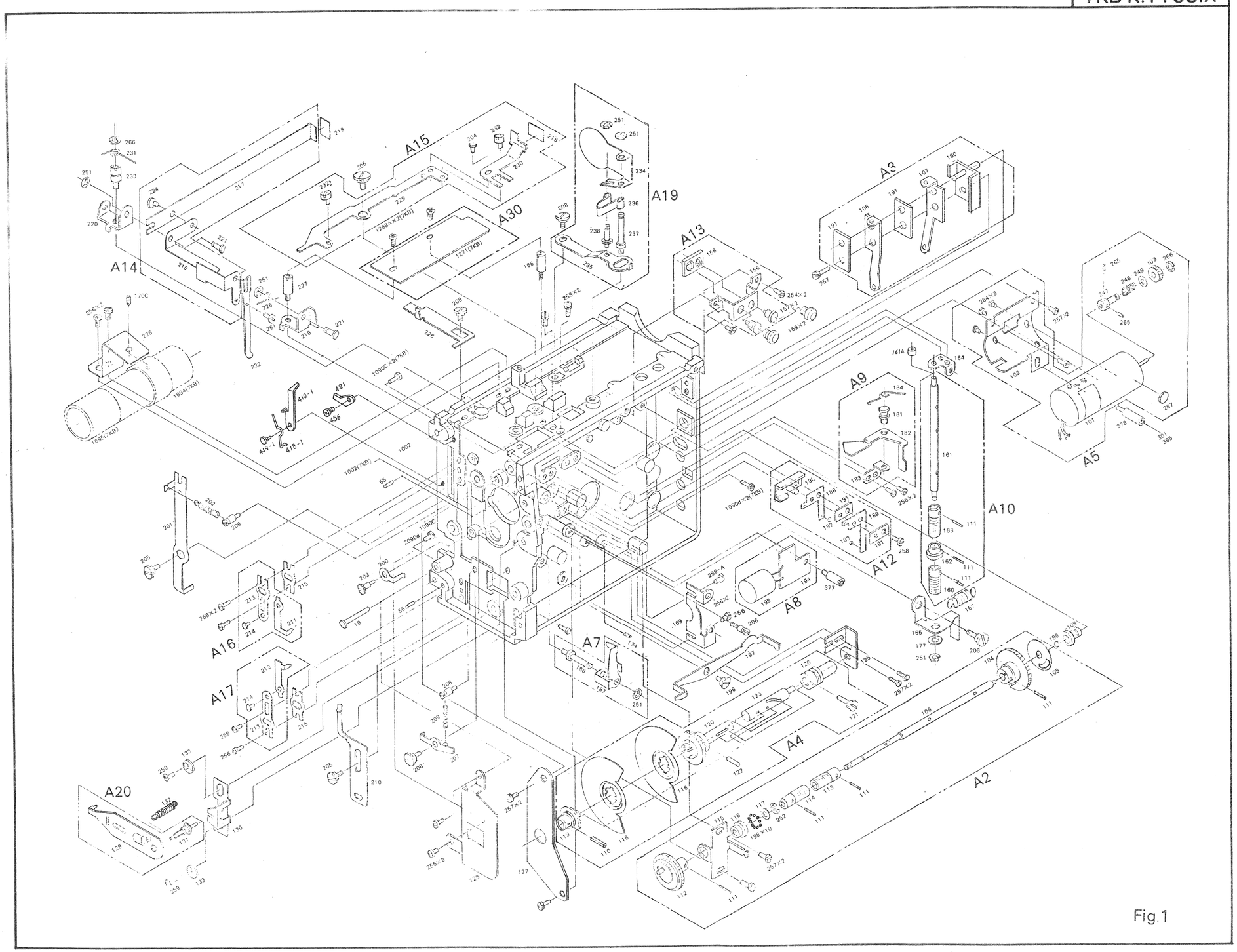

Fig.1

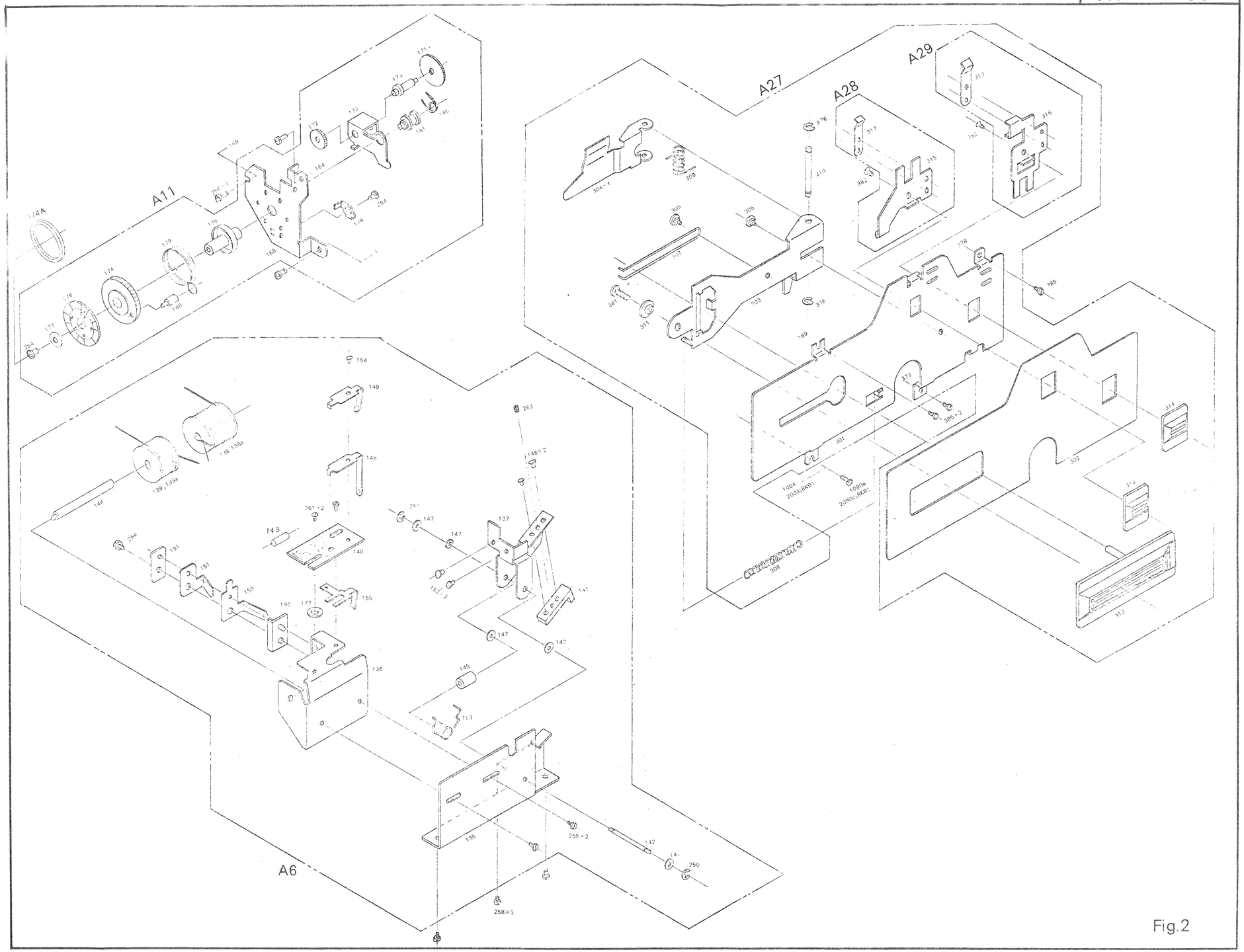
A11
A27
A28
A29
A6
174A
1004
2004(8KB)
1090e
2090e(8KB)
308
258×3
255×2
250
142
141
137
136
135
143
140
144
139, 139a
138, 138a
149
154
146×2
263
147
145
153
155
150
151
191
190
177
261×2
256
185×2
377
301
302
313
314
169
178
185
176
313
315
316
317
309
305
304×1
307
381
311
376
362
164
172
173
171
168
174
175
176
177
180
179
164
178
184
181
185
159

Fig.2

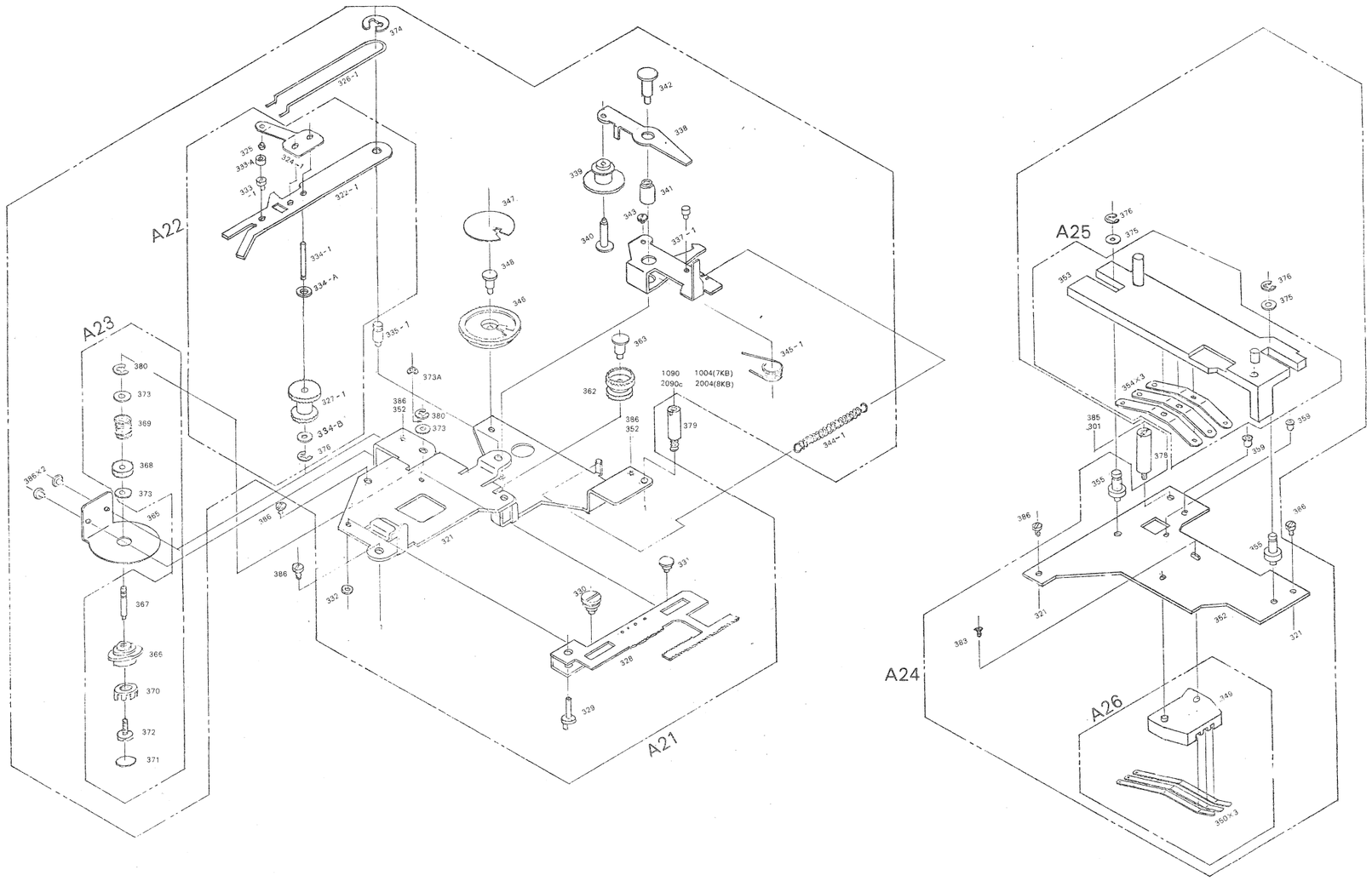

Fig.3

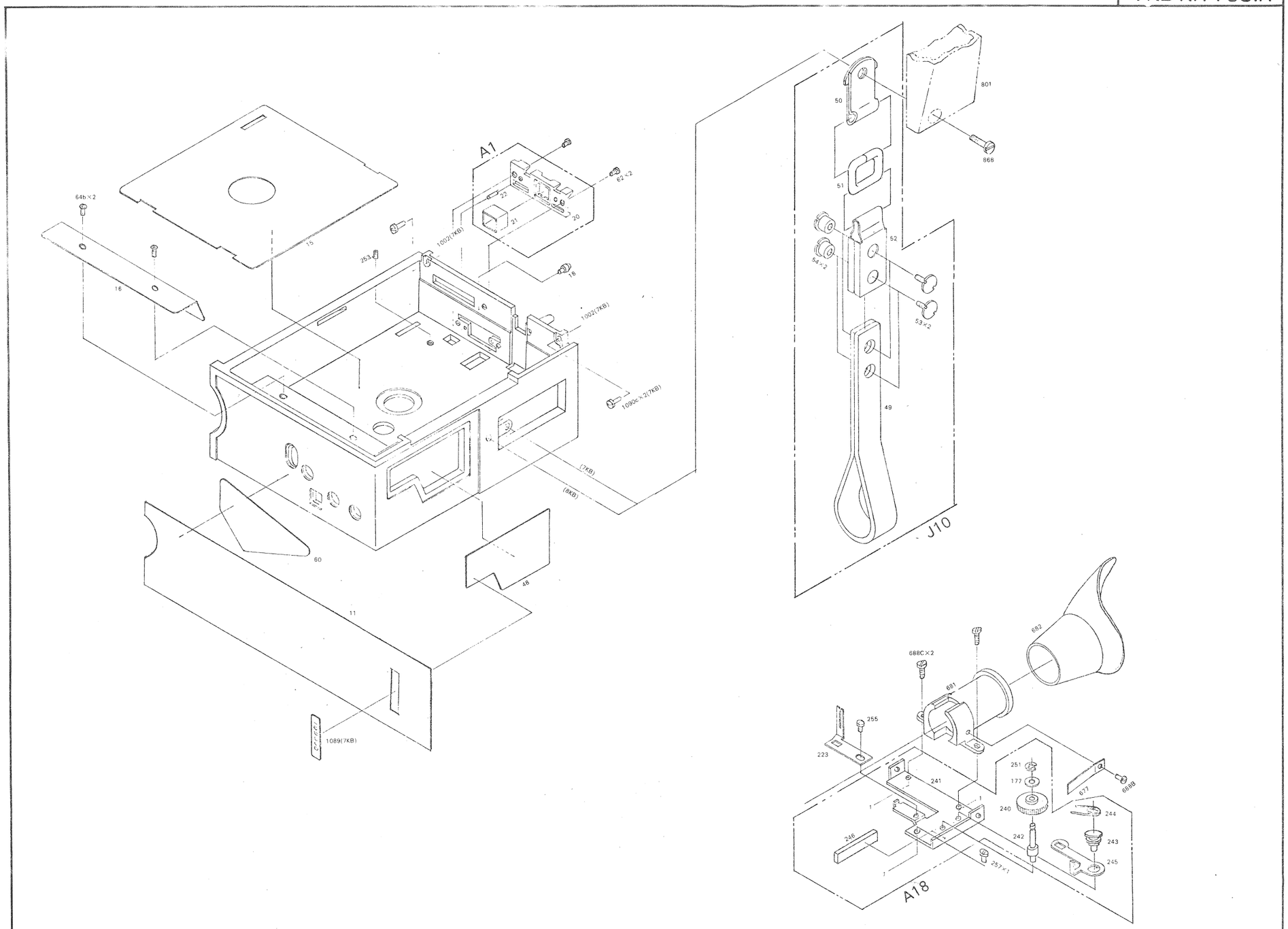
A1
64b×2
15
16
253
1002(7KB)
22
21
20
62×2
18
1002(7KB)
1090C×2(7KB)
(7KB)
(8KB)
60
46
11
1089(7KB)
50
801
868
51
52
54×2
53×2
49
J10
688C×2
692
681
255
223
241
251
177
240
677
688B
244
243
242
245
246
257×1
A18

Fig.4

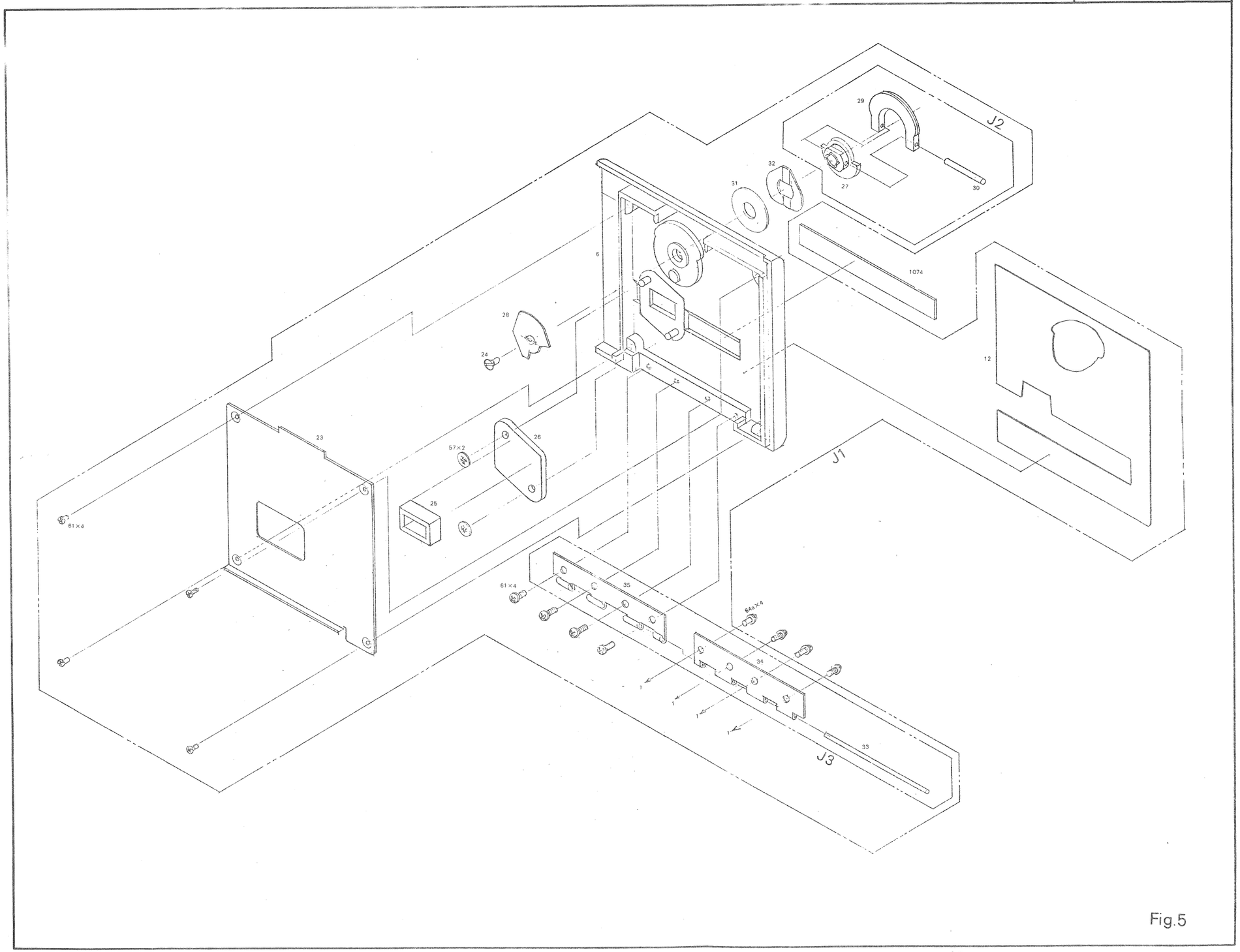
29
J2
32
31
27
30
6
1074
28
24
12
53
23
57×2
26
J1
25
61×4
61×4
35
64s×4
34
33
J3

Fig.5

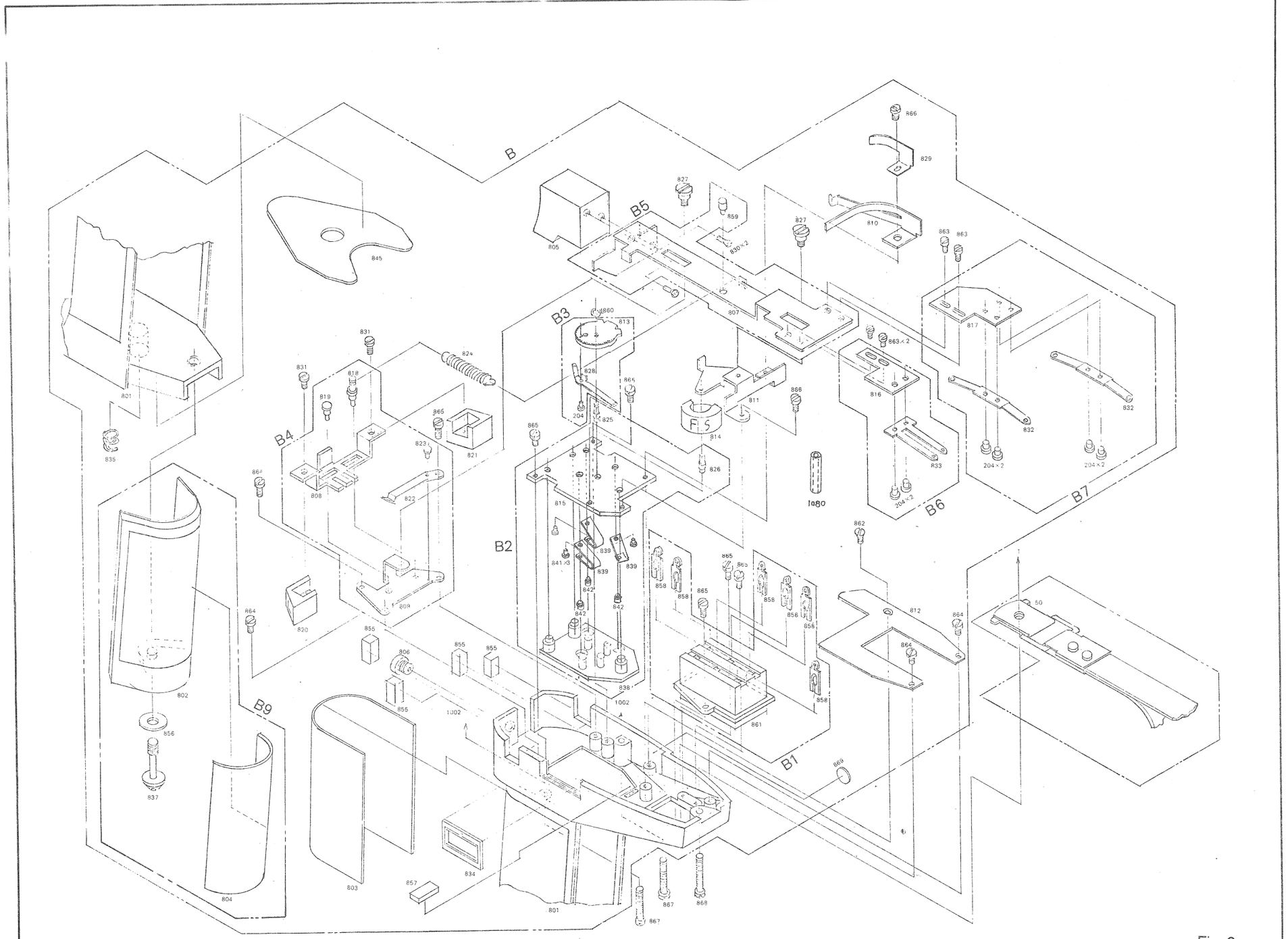
B
B1
B2
B3
B4
B5
B6
B7
B9
801
802
803
804
805
806
807
808
809
810
811
812
813
814
815
816
817
818
819
820
821
822
823
824
825
826
827
828
829
830×2
831
832
833
834
835
837
838
839
841×3
842
845
855
856
857
858
859
860
861
862
863
863×2
864
865
866
867
868
869
204
204×2
1002
1080
50

Fig.6

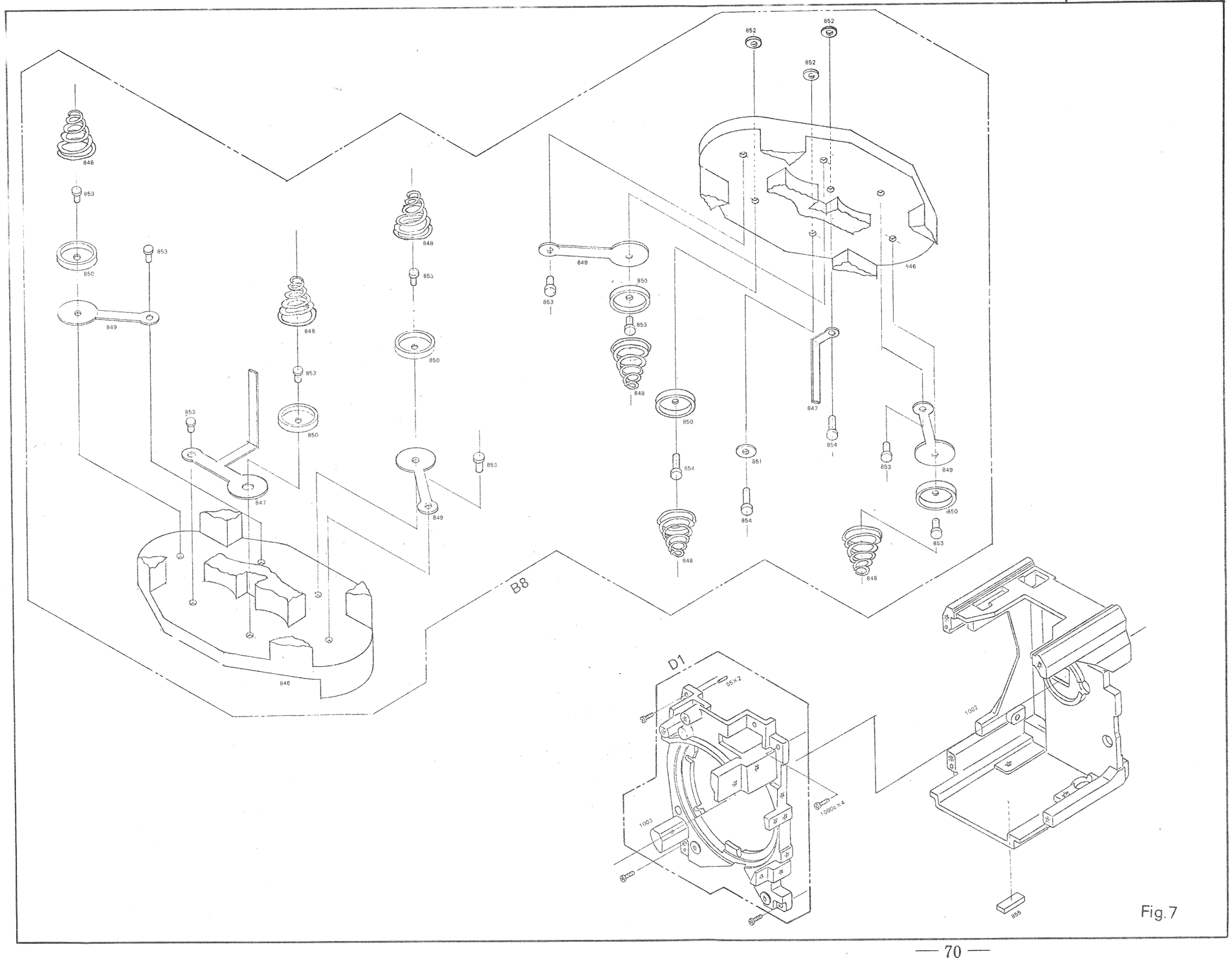
848
853
850
849
847
846
852
854
851
B8
D1
55×2
1003
1006×4
1002
855

Fig.7

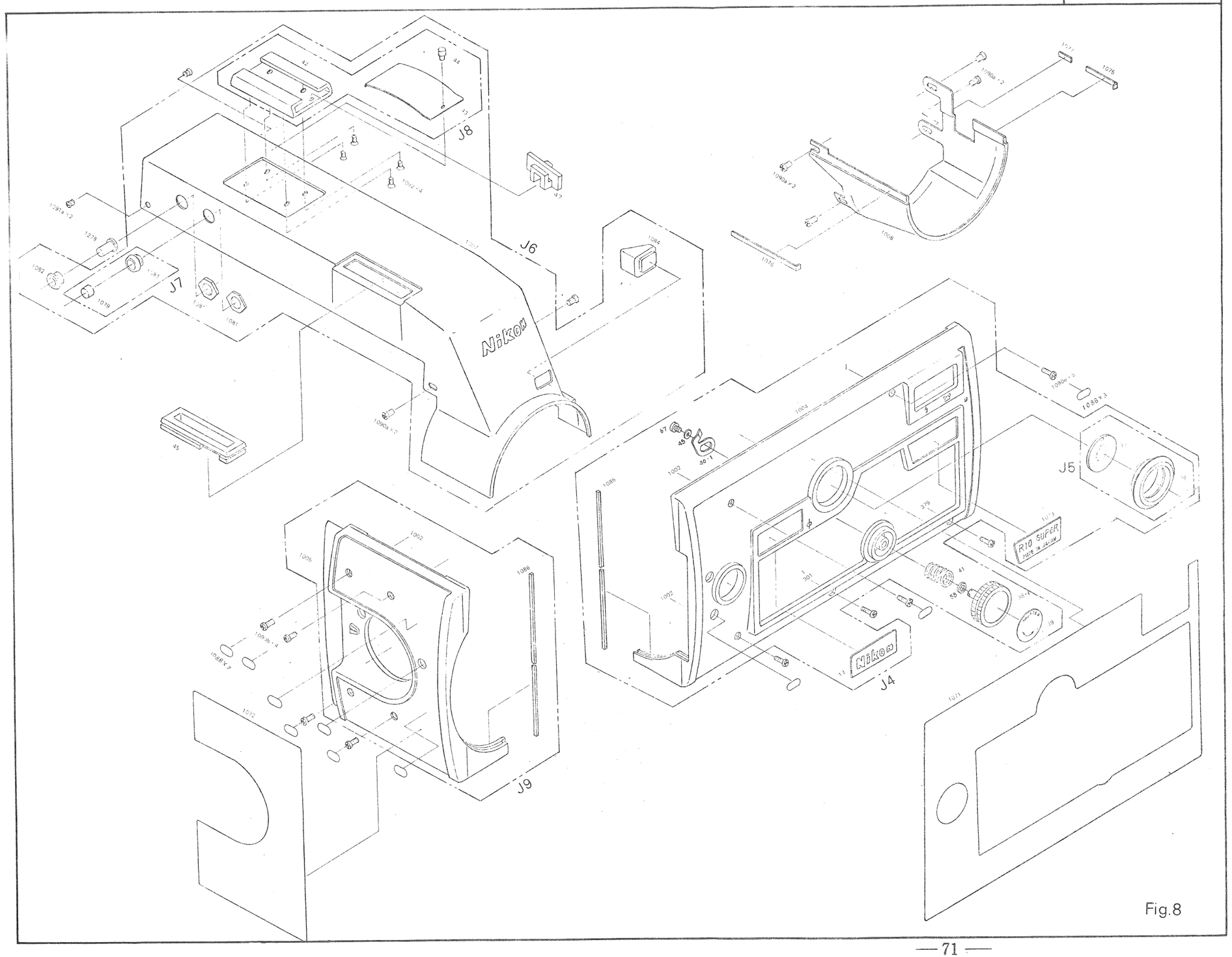

Fig.8

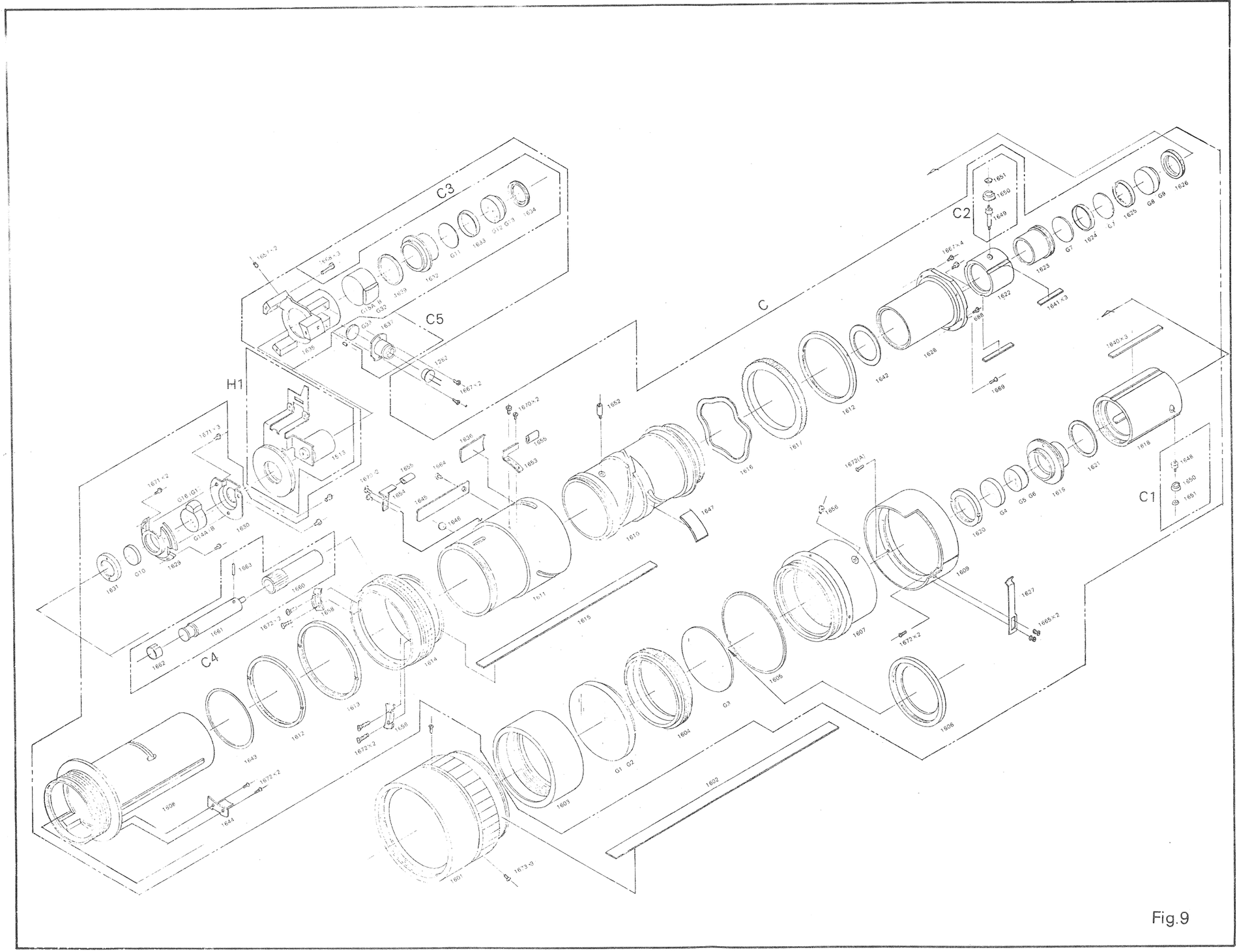

Fig.9

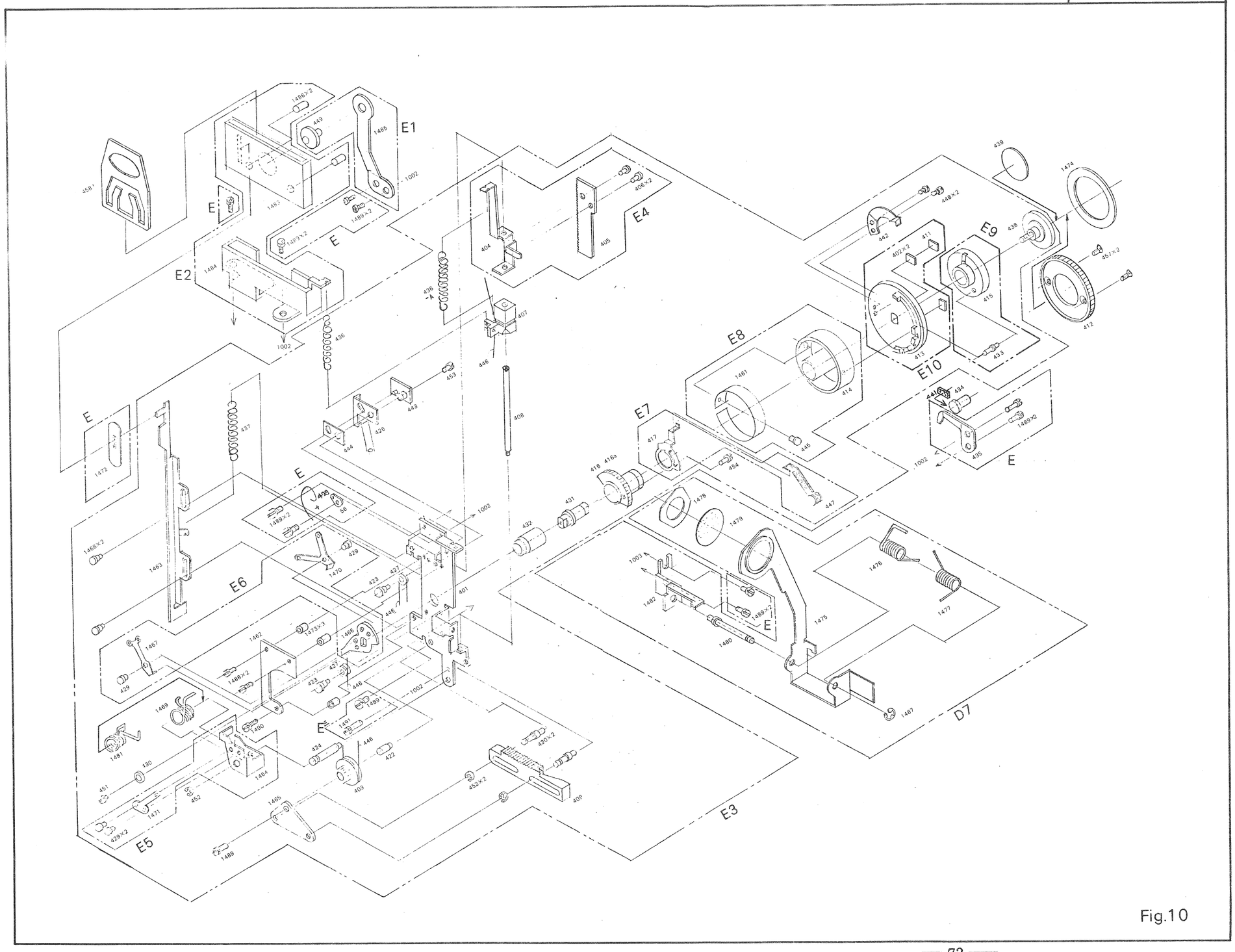

Fig.10

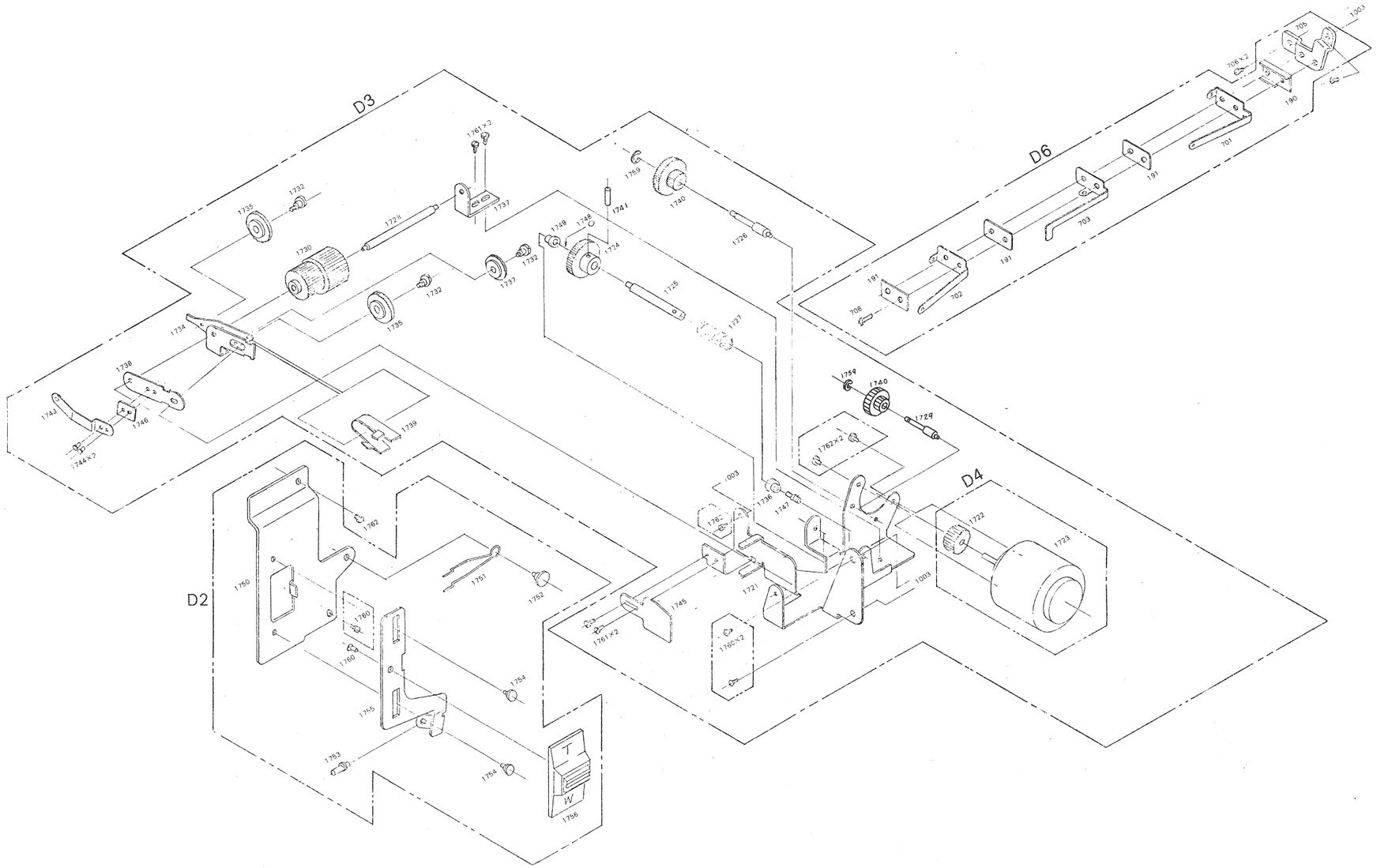
D3
D6
D4
D2
1761×2
1759
1740
1729
1732
1735
1722H
1737
1730
1749
1748
1741
1724
1726
1725
1727
1734
1738
1743
1746
1744×2
1739
1762×2
1003
1736
1747
1722
1723
1721
1745
1761×2
1780×2
1750
1751
1752
1760
1755
1754
1753
1756
705
706×2
190
701
191
703
702
706

Fig.11

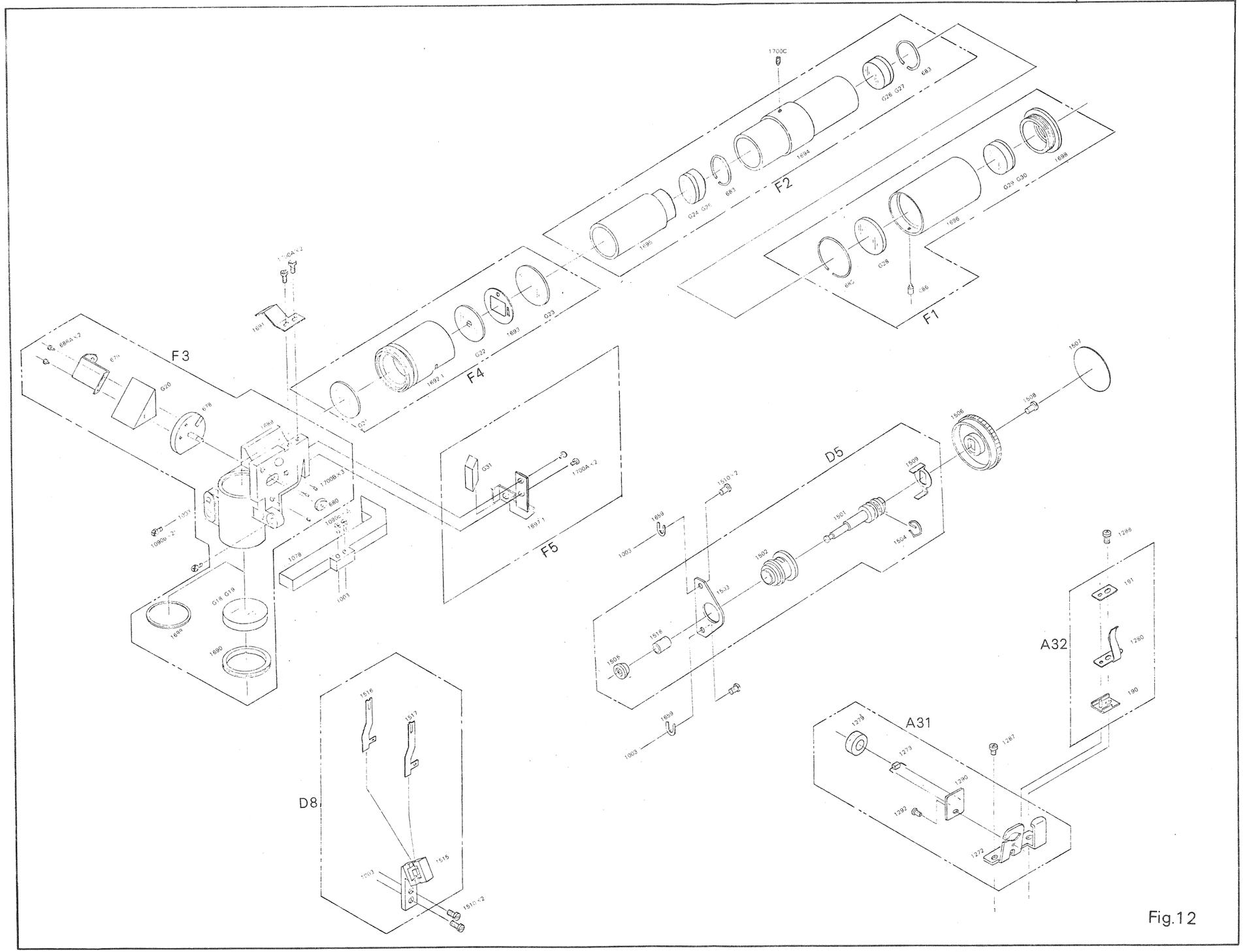

Fig.12

7KB,8KB-R.2082.A

140—06—000
140—07—000

Nikon

Nikon R10, R8 SUPER ZOOM

ニコンR10, R8 スーパーズーム

PARTS LIST

部　品　表

Nikon

NIPPON KOGAKU K.K.

Tokyo, Japan

Printed in Japan

(76. 6. b) H

CONTENTS

目　　次

1. MARKS IN THE PARTS LIST

1. The name and shape column

⊕ ·····Cross recessed head screw
⊖ ·····Slotted head screw
P ·····Oval countersunk head screw
Q ·····Flat head screw
R ·····Pan head screw, flat fillister head screw
S ·····Round head screw
T ·····Truss head screw
U ·····Set screw
U S ·····Set screw (cone point)

2 R — 4
- 4 — Length
- R — Shape of screw head
- 2 — Thread size

(1),(3) ·····1st class, 3rd class
(S) ·····Special screw
d ·····Diameter of the material
T P ·····Taper pin
S P ·····Straight pin

2. The term of sale column

○ ·····Can be supplied individually
△ ·····Not supplied individually but only as subassembly
○△ ·····Supplied either as part or subassembly
× ·····Not considered as repair part
※ ·····Should be sent to the factory if the repair is needed
◙ ·····Delivered as a product from the sales department
(i.e., not supplied as repair part)

3. The remarks column

P-10001 ·····Part number used in common
D-2222 ·····Part number in stock
49F1001 ·····Technical data sheet number
-1×100/1000 ·····Starting order
Rev. ·····Revision
Add. ·····Addition
Dis. ·····Discontinuation
#1—#3 ·····Relative parts number

記　号　説　明

1．名　称　欄

⊕ ……十字穴付ねじ
⊖ ……スリワリ付ねじ
P ……丸サラ頭ねじ
Q ……サラ頭ねじ
R ……ナベ頭ねじ，平頭ねじ
S ……丸頭ねじ
T ……トラス頭ねじ
U ……止めねじ
US ……止めねじ（とがり先）

2R－4
- 4：長さ
- R：ねじ頭の形状
- 2：ねじ径

(1),(3) ……1種，3種
(S) ……特殊ねじ
d ……線　径
TP ……テーパーピン
SP ……ストレートピン

2．販売区分欄

○ ……単独部品として販売するもの
△ ……部組品でなければ販売しないもの
○△ ……単独部品でも部組品でも販売するもの
× ……修理部品とは考えないもの
※ ……単体では交換できないので、組む場合に工場での加工が必要なもの
◎ ……商品として販売店で販売しているもの（修理部品扱いはしない）

3．備　考　欄

P-10001 ……共通部品番号
D-2222 ……貯蔵品番号
49F1001 ……製品技術資料番号
～1×101／1000 ……実施オーダー
Rev. ……訂　正
Add. ……追　加
Dis. ……廃　止
#1－#3 ……関係部品番号

2. Lubricant and binding agent list 潤滑剤・接着剤一覧表

LUBRICANTS 潤滑剤

Oil 油	Usage 用途	Items number 番号	Items 商品名 Japanese 日本	Remarks 備考
Liquid oil 液体油	At a normal temperature 常温用	L 1212	日本石油 F1スピンドル油 No.5	
		L 1233	シエル石油 トナオイル #33	
		L 1309	モービル石油 モービルーブ HD80—90	
		L 1314	モービル石油 モービルーブ HD140	
	At a low temperature 低温用	L 2010	ウイリアム・エフ・ナイ(木村産業) アストロオイル	
		L 2113	三建化工 D.O.S	
		L 2215	エクリプス・パイオニア エクリプス・パイオニア #10(ジャイロ油)	
		L 3016	理研製油 スクワレル LA—10	
		L 3025	理研製油 スクワレル M—1	
		L 3034	理研製油 スクワレル M—2	
		L 3044	理研製油 スクワレル M—5	
		L 3047	理研製油 スクワレル H—1	
Grease oil グリース	At a normal temperature 常温用	G 5201	社内調合	
		G 5204	社内調合	
		G 5214	社内調合	
		G 6053	日本鉱油 パーマルブ H1003	
		G 6252	出光興産 ダフニコロネックス 2	
		G 6372	シエル石油 シエルアルバニア 2	
		G 6414	杉浦研究所 光学用グリース Z—2	
		G 6433	杉浦研究所 光学用グリース X—2	
		G 7821	丸善石油 リマックス 2	
		G 8681	ロックレー(大東商事) リキモリオート LM—81	
	At a low temperature 低温用	G 7100	理研製油 スクワグリース L—2	
		G 7811	日本鉱油 フォートルブ 024	
		G 7812	日本鉱油 フォートルブ 025	
		G 7813	社内調合	
		G 7814	協同油脂 マルテンプPS No.1	
		G 7815	協同油脂 マルテンプPS No.2	
		G 7833	東レシリコーン シリコーンSH,33(F)グリース	
		G 7848	日本石油 ユニテンプグリース	
		G 7854	日本鉱油 パーマルブ C—1	
		G 7855	日本鉱油 パーマルブ C—2	

LUBRICANTS 潤滑油

Oil 油	Usage 用途	Items number 番号	Items 商品名 Japanese 日本	Remarks 備考
Grease oil グリース	At a low temperature 低温用	G 7856	日本鉱油 パーマルブ C－3	
		G 7862	日本鉱油 パーマルブ F－2	
		G 7866	日本鉱油 フォートルブ 023	
		G 7870	モービル石油 モービルグリース 27	
		G 8181	社内調合	
		G 8610	ロックレー(大東商事) リキモリブースター LM－83	
		G 8613	ロックレー(大東商事) リキモリパウダー LM－13	

BINDING AGENTS 接着剤

Usage 用途	Items number 番号	Items 商品名 Japanese 日本	Remarks 備考
For leather or rubber goods. 皮類，ゴム類	# 330	スミボンド VA－1000	
	# 501	プライオボンド #30	
For make metal goods together with metal goods or glass with metal 一般金属相互 ガラスと金属	# 616	セメダインスーパー (家庭用) セメダイン#1500 (工業用)	
	# 621	セメダイン#1565	
	# 631	アラルダイト AT1	
	# 634	主剤 アラルダイト AY 101 硬化剤 ハードナー HY 951	
	#645HB, #645HE	DM K5	
For temporary adhesion in the process 工程上の仮止め	# 201	セラック オレンジ色，レモン色可	
	# 350	ねじロック	
	# 410	ロックタイト (B/M黄，ST/L赤 SC/L紫，N/L青，D橙	
	# 921	アロンアルファ # 201	
	# 922	アロンアルファ # 202	
For replenishment 充填を主とする接着	# 503	ウェザーバンシーラー	
	# 506	スリーボンド No.4	
	# 508	シラシール 3DW	
	# 512	シラシール FSXS－1548	
	#646HB, #646HE	DM D6	
	#647HB, #647HE	DM K3	

140 - 06 - 000

Nikon R10 SUPER ZOOM

ニコン R10 スーパーズーム

1. Parts list 部品表

7KB - R. 2082.A

Part No. 部品番号	Name and Shape 名称および形状	Pcs. per Unit 1台分個数	Reference Subassembly No. 参照部組品番号	Reference Fig. No. 参照図番	Term of Sale 販売区分	Remarks 備考
1-1	Body casting ボデイ	1		1	×	8KB -9
Blank 欠						
Blank 欠						
Blank 欠						
5	Small cover reinforce 小カバー補助板	1			○	Dis. -4×667
6-1	Cartridge chamber door 横ぶた	1	J1	5	△	8KB -11×800
Blank 欠						
Blank 欠						
Blank 欠						
11	Body leatherette 本体装飾擬革	1		4	○	8KB
12	Door leatherette 横ぶた装飾擬革	1	J1	5	○△	8KB
13	Name plate A 大カバー貼銘板	1	J4	8	○△	8KB
13A	Paper for #13 #13用接着紙	1	J4		○△	7KB -5 8KB -3×2000
14	Lighting slot cap ライテイングマウントキャップ	1			◎	8KB
15	Cartridge chamber bottom plate フイルム室銘板	1		4	○	8KB

Part No. 部品番号	Name and Shape 名称および形状	Pcs. per Unit 1台分個数	Reference Subassembly No. 参照部組品番号	Reference Fig. No. 参照図番	Term of Sale 販売区分	Remarks 備考
16	Cartridge pressure spring カートリッジ尻押しバネ	1		4	○	8KB
18	Cartridge locating pin カートリッジ位置決めピン	1		4	○	8KB
19	Filter ejecting rod ADフイルター けとばし棒	1		1	○	8KB
20	Aperture plate アパーチュアプレート	1	A1	4	△	8KB
21	Aperture light baffle 遮光筒	1	A1	4	△	6KB #123 8KB
21—A	Light baffle plate 遮光板	1			○	8KB
22	A.P. dowel pin A.P位置決めノックピン	1	A1	4	△	
23-2	Side door inner cover 横ぶた裏カバー	1	J1	5	○△	7KB -11×800 8KB -8×400
23A	Cartridge mark plate カートリッジ装てん表示マーク	1	J1	5	○△	8KB
24-1	Screw ⊕2.6R-4 (3) 小ねじ	1	J1	5	○△	7KB -7×1000 8KB -6×2000
25	Window light baffle 遮光用モルトプレン	1	J1	5	○△	8KB
26	Cartridge chamber window フイルム室のぞき窓	1	J1	5	○△	8KB
27-1	Door key 鍵軸	1	J1, J2	5	△	7KB -7×1000 8KB -6×2000
28-1	Door lock plate 鍵板	1	J1	5	○△	7KB -7×1000 8KB -6×2000
29	Key catch ツマミ	1	J1, J2	5	△	6KB #18 8KB

Part No. 部品番号	Name and Shape 名称および形状	Pcs. per Unit 1台分個数	Reference Subassembly No. 参照部組品番号	Reference Fig. No. 参照図番	Term of Sale 販売区分	Remarks 備考
30	Catch shaft ツマミ軸	1	J1, J2	5	△	6KB #19 8KB
31	Door key washer 鍵軸ワッシャー	1	J1	5	○△	6KB #20 8KB
32	Spring washer 鍵軸ワッシャー	1	J1	5	○△	6KB #21 8KB
33	Door hinge shaft 蝶番芯	1	J1, J3	5	△	8KB
34	Door hinge A 横ぶた蝶番A	1	J1, J3	5	△	8KB
35	Door hinge B 横ぶた蝶番B	1	J1, J3	5	△	8KB
36	Footage counter window 計尺窓ワク	1	J4, J5	8	△	8KB
37	Window cover plate 計尺アクリル窓	1	J4, J5	8	△	8KB
38-1	VS control knob VSツマミ	1	J4	8	○△	8KB
39	VS knob label VSツマミ銘板	1	J4	8	○△	8KB
39A	Paper for #39 #39用接着紙	1	J4		○△	7KB -5 8KB -8×2000
40-1	VS clutch VSクラッチづめ	1	J4	8	○△	7KB -3×700 8KB -4×400
41	VS spring VSツマミバネ	1	J4	8	○△	8KB
42	Accessory shoe アクセサリーシュー	1	J6, J8	8	△	8KB
43	Shoe spring シューバネ	1	J6, J8	8	△	8KB
44	Shoe stopper pin ストッパーピン	1	J6, J8	8	△	8KB

Part No. 部品番号	Name and Shape 名称および形状	Pcs. per Unit 1台分個数	Reference Subassembly No. 参照部組品番号	Reference Fig. No. 参照図番	Term of Sale 販売区分	Remarks 備考
45	Washer ワッシャー	1	J4	8	○△	8KB
46	Lighting slot bushing ライティングマウントゴム	1		9	○	8KB
47	Eyepiece shutter control 接眼シャッターツマミ	1		8	○	8KB
48	Body bottom plate 本体底板	1		4	○	8KB
49	Wrist strap リストストラップ	1	J10	4	○△	8KB
50	Wrist strap holder リストストラップホルダー	1	J10	4, 6	△	8KB
51	Ring つり環	1	J10	4	△	8KB
52	Strap clip クリップ金具	1	J10	4	△	8KB
53-1	Clip screw 飾りビス	2	J10	4	○△	7KB -9×700 8KB -7×2100
54-1	Clip nut 飾りナット	2	J10	4	○△	7KB -9×700 8KB -7×2100
55	Straight pin ノックピン	6	D1×4		○△	6KB #37 8KB
55—A	Eccentric pin 偏心ピン	4			○	7KB -3 8KB -1
56	Lug ラグ板	1	E-1	10	○△	8KB
57	Shaft speed clip 軸用プッシュナット	2	J1	5	○△	8KB
58	VS washer VSワッシャー	1	J4	8	○△	8KB
591	Lead wire (red) Φ0.8×50mm ビニールコード (赤)	1	B		○△	8KB

Part No. 部品番号	Name and Shape 名称および形状	Pcs. per Unit 1台分個数	Reference Subassembly No. 参照部組品番号	Reference Fig. No. 参照図番	Term of Sale 販売区分	Remarks 備考
59·ロ	Lead wire (red) φ0.8x30 mm ビニールコード (赤)	1	B		○△	8KB
59·ハ	Lead wire (red) 0.8x80 ビニールコード (赤)	1	B, B		○△	8KB
59·ニ	Lead wire (red) 0.8x65 ビニールコード (赤)	1	A24-1		○△	8KB
Blank 欠						
59·ヘ	Lead wire (black) 0.8x220 ビニールコード (黒)	1	A30		○△	8KB
59·ト	Lead wire (black) 0.8x65 ビニールコード (赤)	1	A12		○△	8KB
59·チ	Lead wire (black) 0.8x55 ビニールコード (黒)	1	A6-1		○△	8KB
59·リ	Lead wire (black) 0.8x110 ビニールコード (黒)	1	A3		○△	8KB
59·ヌ	Lead wire (yellow) 0.8x30 ビニールコード (黄)	1	B		○△	8KB
59·ル	Lead wire (yellow) ビニールコード (黄) 0.8x80	1	B, B1		○△	8KB
59·ヲ	Lead wire (yellow) ビニールコード (黄) 0.8x65	1	A6-1		○△	8KB
59·ワ	Lead wire (green) 0.8x30 ビニールコード (緑)	1	B		○△	8KB
59·カ	Lead wire (green) 0.8x85 ビニールコード (緑)	1	A3		○△	8KB
59·ヨ	Lead wire (green) ビニールコード (緑) 0.8x30	1	A24-1		○△	8KB
59·タ	Lead wire (red) ビニールコード (赤) 0.8x30	1	B		○△	8KB

Part No. 部品番号	Name and Shape 名称および形状	Pcs. per Unit 1台分個数	Reference Subassembly No. 参照部組品番号	Reference Fig. No. 参照図番	Term of Sale 販売区分	Remarks 備考
59·レ	Lead wire (grey) Φ0.8x30mm ビニールコード (灰)	1	B		○△	8KB
59·ツ	Lead wire (brown) 0.8x30 ビニールコード (茶)	1	B		○△	8KB
59·ネ	Lead wire (brown) 0.8x80 ビニールコード (茶)	1	B, B1		○△	8KB
59·ナ	Lead wire (brown) 0.8x100 ビニールコード (茶)	1	A32		○△	8KB
59·ラ	Lead wire (white) ビニールコード (白) 0.8x30	1	B		○△	8KB
59·ム	Lead wire (blue) 0.8x70 ビニールコード (青)	1	A6-1		○△	8KB
59·ウ	Lead wire (blue) 0.8x30 ビニールコード (青)	1	A24-1		○△	8KB
59·ノ	Lead wire (blue) 0.8x85 ビニールコード (青)	1	A12		○△	8KB
59·オ	Lead wire (pink) 0.8x90 ビニールコード (桃)	1	A6-1		○△	8KB
59A	FR lead wire FRリード線 0.65x12	3	A24-1		○△	8KB
59B	Lead wire (orange) 0.8x30 ビニールコード (オレンジ)	1	B2		△	8KB
59C	Lead wire (black) 0.8x25 ビニールコード (黒)	1	B2		△	8KB
59D	Lead wire (red) 0.8x25 ビニールコード (赤)	1	B2		△	8KB
60	Body back blind 本体背面かくし板	1		4	○	8KB
61	Screw ⊕ 2Q—2.5 (1) 小ねじ	4	J1	5	○△	8KB
62	Screw ⊕ 2R—2 (1) 小ねじ	2		4	○	8KB

Part No. 部品番号	Name and Shape 名称および形状	Pcs. per Unit 1台分個数	Reference Subassembly No. 参照部組品番号	Reference Fig. No. 参照図番	Term of Sale 販売区分	Remarks 備考
64a	Screw ⊕ 2R—2.5 (1) 小ねじ	8	J1	5	○△	8KB
64b	Screw ⊕ 2R—2.5 (1) 小ねじ	2		4	○	8KB
65	Cord clip コード押え	3			○	8KB
67	Screw ⊕ 2R—3 (3) 小ねじ	1	J4	8	○△	8KB
68	Key holder キーホルダー				◎	7KB -5 8KB -5
Blank 欠						
Blank 欠						
101	Film drive motor F.駆動モーター	1	A5	1	△	8KB
102	Motor mount モーター基板	1	A5	1	△	8KB
103	Motor gear モーターギヤ	1	A5	1	△	8KB
104 (104a)	Cam axle gear カム軸ギヤ	1	A2	1	△	8KB
105	Stop switch plate 停止位置規正 スイッチ板	1	A2	1	△	8KB
106	Stop switch contact A 規正スイッチバネA	1	A3	1	△	8KB
107	Stop switch contact B 規正スイッチバネB	1	A3	1	△	8KB
108	Claw cam bearing bush A Cカム軸受ブッシュA	1		1	○	8KB

Part No. 部品番号	Name and Shape 名称および形状	Pcs. per Unit 1台分個数	Reference Subassembly No. 参照部組品番号	Reference Fig. No. 参照図番	Term of Sale 販売区分	Remarks 備考
109	Claw cam shaft Cカム軸	1	A2	1	△	8KB
110	Spring pin A スプリングピンA	1	A4	1	△	8KB
111	Spring pin B スプリングピンB	7	A2×4 A10-1×3	1	△	8KB
112	Claw cam クローカム	1	A2	1	△	8KB
113	Advance worm 巻取ウォーム	1	A2	1	△	8KB
114	Counter worm 計尺ウォーム	1	A2	1	△	8KB
115	Cam shaft bracket Cカム軸受板	1	A2	1	△	8KB
116	C cam bearing bush B Cカム軸受ブッシュB	1	A2	1	△	8KB
117	C cam washer Cカム軸ワッシャー	1	A2	1	△	8KB
118	Shutter sector S羽根	2	A4	1	△	8KB
119	Shutter bush S羽根ブッシュ	1	A4	1	△	8KB
120	Shutter shaft gear S羽根軸ギア	1	A4	1	△	8KB
121	Shutter guide pin S羽根軸ガイドピン	1	A4	1	○△	8KB
122	Shutter stopper pin (SP1 - 3) S羽根制限ピン	1	A4	1	○△	8KB
123	Shutter shaft S羽根軸	1	A4	1	△	8KB

Part No. 部品番号	Name and Shape 名称および形状	Pcs. per Unit 1台分個数	Reference Subassembly No. 参照部組品番号	Reference Fig. No. 参照図番	Term of Sale 販売区分	Remarks 備考
Blank 欠						
125	Shutter bearing bracket S羽根軸受板	1		1	○	8KB
126	Shutter shaft sleeve 羽根軸スリーブ	1	A4	1	○△	8KB
127	Shutter bush bracket S羽根ブッシュ支え	1		1	○	8KB
128	Sector cover セクターカバー	1		1	○	8KB
129	Claw クロー	1	A20	1	△	8KB
130	Claw mount クロー基板	1		1	○	8KB
131	Claw shaft クロー軸	1	A20	1	△	8KB
132	Claw spring クローバネ	1		1	○	8KB
133	Claw mount eccenter 基板偏心環	2		1	○	8KB
134	Set screw 軸受セットビス	1		1	○	8KB
135	Yoke A ヨークA	1	A6-1	2	△	8KB
136	Yoke B ヨークB	1	A6-1	2	△	8KB
137	Armature アーマチュア	1	A6-1	2	△	8KB
138 138a	Starting coil 起動コイル		A6-1	2	△	8KB

Part No. 部品番号	Name and Shape 名称および形状	Pcs. per Unit 1台分個数	Reference Subassembly No. 参照部組品番号	Reference Fig. No. 参照図番	Term of Sale 販売区分	Remarks 備考
139 139a	Magnet release coil マグネットレリーズ保持コイル	1	A6-1	2	△	8KB
140	Motor switch base モーター接点取付基板	1	A6-1	2	△	8KB
141-1	Stopper ストッパー	1	A6-1	2	△	7KB -9×800 8KB -7×2000
142	Armature shaft アーマチュア回転軸	1	A6-1	2	○△	8KB
143	Diode ダイオード	1	A6-1	2	○△	8KB
144	Magnet core コアー	1	A6-1	2	△	8KB
145	Returen spring collar 戻しバネカラー	1	A6-1	2	○△	8KB
146	Claw rivet 掛止つめカシメピン	2	A6-1	2	△	8KB
147	Space washer 間隔ワッシャー	5	A6-1	2	○△	8KB
148	Motor contact spring モーター接点バネ	1	A6-1	2	△	8KB
149	Motor contact support モーター接点バネ受け	1	A6-1	2	△	8KB
150	Tape recorder contact spring テレコ接点バネ	1	A6-1	2	△	8KB
151	Tape recorder contact support テレコ接点バネ受け	1	A6-1	2	△	8KB
152	Armature rivet アーマチュアカシメ接点	2	A6-1	2	△	8KB
153	Armature return spring アーマチュア戻しバネ	1	A6-1	2	○△	8KB

Part No. 部品番号	Name and Shape 名称および形状	Pcs. per Unit 1台分個数	Reference Subassembly No. 参照部組品番号	Reference Fig. No. 参照図番	Term of Sale 販売区分	Remarks 備考
154	Motor contact rivet モーター接点カシメピン	1	A6-1	2	△	8KB
155	Coil retaining spring コイル固定バネ	1	A6-1	2	○△	8KB
156	Synch-socket mount シンクロターミナル板	1	A13	1	△	8KB
157-1	Synch-socket シンクロターミナル	2	A13	1	△	32FB #15 7KB -7 8KB -6×2000
158-1	Synch-socket nut シンクロターミナル取付ナット	2	A13	1	△	7KB -9×1500 8KB -7×2200
159	Synch-socket cap ターミナルキャップ	2		1	○	30FB #571 8KB
160-1	Power fading worm P.Fウオーム	1	A10-1	1	△	7KB -4×501 8KB -4×1001
161-1	Counter coupling shaft 計尺連動軸	1	A10-1	1	△	7KB -4×501 8KB -5×5
161-A	Counter aux. collar	1		1	○	Dis. -4×501
162	Counter 1st worm wheel 計尺第一ホイル	1	A10-1	1	△	8KB
163	Counter 2nd worm 計尺第二ねじ歯車	1	A10-1	1	△	8KB
164	Bracket A 連動軸受板A	1		1	○	8KB
165	Bracket B 連動軸受板B	1		1	○	8KB
166	Checker rear pin チエッカー後足棒	1		1	○	8KB
167	Connecting rod spring 連動軸引張りバネ	1		1	○	8KB
168	Counter base plate 計尺基板	1	A11	2	△	8KB

Part No. 部品番号	Name and Shape 名称および形状	Pcs. per Unit 1台分個数	Reference Subassembly No. 参照部組品番号	Reference Fig. No. 参照図番	Term of Sale 販売区分	Remarks 備考
169	Counter·OL mount plate 計尺OL基板取付板	1		1	○	8KB
170	Counter pinion bracket 計尺ピニオン支え	1	A11	2	△	8KB
171	Counter 2nd worm wheel 計尺第二ホイル	1	A11	2	△	8KB
172	Counter pinion 計尺ピニオン	1	A11	2	△	8KB
173	Pinion axle ピニオン軸	1	A11	2	△	8KB
174-1	Counter dial gear 計尺目盛板ギア	1	A11	2	△	8KB
175	Counter dial axle 計尺目盛軸	1	A11	2	△	8KB
176—1	Counter dial 計尺目盛	1	A11	2	○△	7KB -5×1001 8KB -4×1001
177	Dial washer 目盛座金	9	A6-1, A11 A18	1,2,4	○△	8KB
178	Counter stopper 目盛制限板	1	A11	2	○△	8KB
179	Counter zero-return spring 計尺ゼロ帰りバネ	1	A11	2	○△	8KB
180	Zero-return spring holder ゼロ帰りバネ掛け	1	A11	2	△	8KB
181	Counter spring stud 計尺バネ軸	2	A9, A11	1, 2	△	8KB
182	Cartridge coupling lever カートリッジ計尺連動板	1	A9	1	△	8KB
183	Coupling lever bracket 連動板取付板	1	A9	1	△	8KB

Part No. 部品番号	Name and Shape 名称および形状	Pcs. per Unit 1台分個数	Reference Subassembly No. 参照部組品番号	Reference Fig. No. 参照図番	Term of Sale 販売区分	Remarks 備考
184	Coupling spring 連動ねじりバネ	1	A9	1	○△	8KB
185	Pinion spring ピニオンねじりバネ	1	A11	2	○△	8KB
186	V.S signal lever axle V.Sシグナルレバー軸	1	A7	1	○△	V.S: Variable Shutter 8KB
187	V.S signal lever V.Sシグナルレバー	1	A7	1	○△	8KB
188	Synch contact A ストロボ接点バネA	1	A12	1	△	8KB
189	Synch contact B ストロボ接点バネB	1	A12	1	△	8KB
190	Contact attaching base 接点絶縁ブッシュ	5	A6-1 A3, A12 A32, D6	1, 2 11, 12	△	8KB
191	Contact insulator 接点絶縁板	9	A3×2, A12×2, A32×1 A6-1 × 4	1, 2 11, 12	△	8KB
192	Contact point (disk) デイスク型接点	1	A12	1	△	30FB #557 8KB
193	Contact point (oval) オパール型接点	1	A12	1	△	30FB #556 8KB
194	Capacitor mount plate コンデンサーターミナル板	1	A8	1	△	8KB
195	Electrolytic capacitor アルミ電解コンデンサー	1	A8	1	○△	8KB
196	Shoulder screw 段付ビス	1		1	○	8KB
197-1	FR see-saw lever FRシーソーレバー	1		1	○	FR: FOW . REW 7KB -9 8KB -7×2800
198	REW thrust ball (1mm dia.) Rスラスト受鋼球	27	A2×10	1	○△	6KB #154 8KB

Part No. 部品番号	Name and Shape 名称および形状	Pcs. per Unit 1台分個数	Reference Subassembly No. 参照部組品番号	Reference Fig. No. 参照図番	Term of Sale 販売区分	Remarks 備考
199	FOW thrust ball (1/16" dia.) Fスラスト受鋼球	1		1	○	8KB
200	Side pressure plate B Sプッシャー B	1		1	○	8KB
201	Side pressure plate lever SPレバー	1		1	○	8KB
202	Side pressure plate spring SP引張バネ	1		1	○	8KB
203-1	Side pressure plate B screw SP.B取付ビス	1		1	○	7KB -7 8KB -7
204	Rivet カシメピン	8	A15, B B3, B6, B7	1, 6	△	30FB #555 8KB
205	Shoulder screw 0.5t段付ビス	3		1	○	8KB
206	Spring stud FR.SPバネ掛け	3		1	○	8KB
207	FR intermediate lever FR中間レバー	1		1	○	8KB
208	Shoulder screw 0.6t段付ビス	4		1	○	8KB
209	FR spring FRバネ	1		1	○	8KB
210	FR slider FRスライダー	1		1	○	8KB
211	FOW ratchet Fラチエット	1	A16	1	△	8KB
212	REW ratchet Rラチエット	1	A17	1	△	8KB
213	Ratchet spring ラチエットバネ	2	A16, A17	1	△	8KB

Part No. 部品番号	Name and Shape 名称および形状	Pcs. per Unit 1台分個数	Reference Subassembly No. 参照部組品番号	Reference Fig. No. 参照図番	Term of Sale 販売区分	Remarks 備考
214	Ratchet rivet ラチエットビョウ	2	A16, A17	1	△	8KB
215	Spring retainer バネ押え	2		1	○	8KB
216	VS signal lever mount VS棹	1	A14	1	△	8KB
217	VS signal lever coupler VS振棹	1	A14	1	△	8KB
218	Red signal plate VS.E赤マーク	2		1	○	8KB
219	VS lever bracket A VS基板A	1		1	○	8KB
220	VS lever bracket B VS基板B	1		1	○	8KB
221	VS signal lever axle VSシグナル軸	2		1	○	8KB
222	VS auxiliary signal lever VS補助棹	1		1	○	8KB
223	Lever stopper 棹振止	1		4	○	8KB
224	VS lever eccenter VS棹偏心ビョウ	1	A14	1	△	8KB
225	VS lever spring VS振棹バネ	1		1	○	8KB
226	Finder tube retainer フアインダー筒押え板	1		1	○	8KB
227	Checker front pin チエッカ前足棒	1		1	○	8KB
228	Door coupling lever 横ぶた連動レバー	1		1	○	8KB

Part No. 部品番号	Name and Shape 名称および形状	Pcs. per Unit 1台分個数	Reference Subassembly No. 参照部組品番号	Reference Fig. No. 参照図番	Term of Sale 販売区分	Remarks 備考
229	Film end signal lever 赤マークレバー	1	A15	1	△	8KB
230	Angle plate 角板	1	A15	1	△	8KB
231	Coupling lever spring 連動レバーねじりバネ	1		1	○	8KB
232	Red signal adjusting pin E赤マーク調整ピン	2	A15	1	△	8KB
233	VS bracket B axle VS基板B押え軸	1		1	○	8KB
234	Eyepiece shutter Fシャッター	1	A19	1	○△	8KB
235	Eyepiece shutter lever Fシャッターレバー	1	A19	1	△	8KB
236	Toggle spring トグルバネ	1	A19	1	○△	8KB
237	Eyepiece shutter axle Fシャッター軸	1	A19	1	○△	8KB
238	Toggle spring holder トグル軸	1	A19	1	△	8KB
Blank 欠						
240	Eyepiece diopter ring 視度調節ダイヤル	1	A18	4	○△	8KB
241	Eyepiece mount plate 接眼基板	1	A18	4	△	8KB
242	Diopter ring axle 視度調節軸	1	A18	4	△	8KB
243	Diopter lever axle 視度調節レバー軸	1	A18	4	△	8KB

Part No. 部品番号	Name and Shape 名称および形状	Pcs. per Unit 1台分個数	Reference Subassembly No. 参照部組品番号	Reference Fig. No. 参照図番	Term of Sale 販売区分	Remarks 備考
244	Diopter lever spring 視度調節ねじりバネ	1	A18	4	○△	8KB
245	Diopter lever 視度調節レバー	1	A18	4	△	8KB
246	Light baffle sponge モルトプレン	1	A18	4	○△	8KB
247	Film drive motor shaft sleeve モーター軸環	1	A5	1	△	8KB
248	Friction spring マサツバネ	1	A5	1	△	6KB #72 8KB
249	Friction washer モーターフリクションワッシャ	1	A5	1	△	8KB
250	Snap ring (E - 10) E型リング	2	A6-1	2	○△	8KB
251	Snap ring (E - 13) E型リング	7	A7×1 A18×1 A19×2	1, 4	○△	8KB
252	Snap ring (E - 17) E型リング	1	A2	1	○△	8KB
253	Set screw 2U—3 セットねじ	1		4	○	8KB
254	Screw ⊕ 2R—2 (1) 小ねじ	4	A11×2	1, 2	○△	8KB
255	Screw ⊕ 2R — 2 (3) 小ねじ	5	A6-1×2	1,2,4	○△	8KB
256	Screw ⊕ 2R—2.5 (3) 小ねじ	13	A6-1 ×1	1, 2	○△	8KB
256A	Screw 小ねじ ⊕ 2R—2.5 (1)	1		1	○	8KB
257	Screw ⊕ 2R—3 (3) 小ねじ	10		1, 4	○	8KB
258	Screw ⊕ 2R—3.5 (3) 小ねじ	6		1, 2	○	8KB

Part No. 部品番号	Name and Shape 名称および形状	Pcs. per Unit 1台分個数	Reference Subassembly No. 参照部組品番号	Reference Fig. No. 参照図番	Term of Sale 販売区分	Remarks 備考
259	Screw ⊕ 2Q—3 (1) 小ねじ	2		1	○	8KB
Blank 欠						
261	Screw ⊕ 1.4R—2 (3) 小ねじ	3	A6-1 ×2	1, 2	○△	8KB
262	Stopper eccentric pin 偏心ストッパーピン	1	A6-1		△	7KB -9×300 8KB -7×2000
263	Screw ⊕ 1.4R—5 (1) 小ねじ	1	A6	2	○△	Dis. -9×300
264	Screw ⊕ 1.7R—2 (3) 小ねじ	3	A5	1	○△	8KB
265	Set screw 1.7US—2.5 セットねじ	2	A5	1	○△	8KB
266	Snap ring (E - 24) E型リング	2	A5×1	1	○△	8KB
267—1	Rubber pad シンクロターミナル補助ゴム	1	A5	1	○△	#869 7KB -7 8KB -6×2000
Blank 欠						
174-A	Counter light baffle ring 計尺遮光サング	1		2	○	Dis. -5×1000
Blank 欠						
301-1	FR operating plate OL基板	1	A27	2	△	7KB -9×500 8KB -7×1000
302-1	FR operating panel FR表示貼銘板	1	A27	2	○△	7KB -10×1000 8KB -7×1600
303	OL/DE slide plate OL.DEスライド板	1	A27	2	△	8KB

Part No. 部品番号	Name and Shape 名称および形状	Pcs. per Unit 1台分個数	Reference Subassembly No. 参照部組品番号	Reference Fig. No. 参照図番	Term of Sale 販売区分	Remarks 備考
304-1	OL change-over plate OL切換え板	1	A27	2	○△	7KB -9×1700 8KB -8×1000
305	OL slide guide OLスライド板ガイド軸	2	A27	2	△	8KB
307	OL lever spring OLレバー用松葉バネ	1	A27	2	○△	8KB
308	OL slide spring OLスライド板用バネ	1	A27	2	○△	8KB
309	OL change-over spring 切換板用バネ	1	A27	2	○△	8KB
310	OL change-over shaft OL切換板用軸	1	A27	2	○△	8KB
311	OL slide collar OLスライド板用カラー	1	A27	2	○△	8KB
313-3	OL control knob OLつまみ	1	A27	2	○△	7KB -9×1000 8KB -7×1500
313A	OL knob insert (A) OLつまみ インサート金具 (A)	1	A27		△	7KB -7×500 8KB -6×1500
313B	OL knob insert (B) OLつまみインサート金具 (B)	1	A27		△	7KB -9×1000 8KB -7×1500
314	OL change-over switch knob OL・FR切換つまみ	2	A27	2	○△	8KB
315	OL change-over guide plate OL切換ガイド板	1	A27, A28	2	△	8KB
316	FR change-over guide plate FR切換ガイド板	1	A27, A29	2	△	8KB
317	Click spring クリックバネ	2	A27,A28,A29	2	△	8KB
321	FR base plate FR基板					8KB

Part No. 部品番号	Name and Shape 名称および形状	Pcs. per Unit 1台分個数	Reference Subassembly No. 参照部組品番号	Reference Fig. No. 参照図番	Term of Sale 販売区分	Remarks 備考
322-1	PF lever A FRレバーA	1	A21-1 A22-1	3	△	PF: Power Fading 8KB
324-1	Shutter click spring 開角位置決めバネ	1	A21-1 A22-1	3	△	8KB
325	Click rivet 開角位置決めクリック	1	A21-1 A22-1	3	△	8KB
326-1	PF lever spring PFレバー用松葉バネ	1	A21-1	3	○△	8KB
327-1	PF coupling gear PF連動ギア	1	A21-1 A22-1	3	○△	7KB -4×501 8KB -4×1001
328	VS rack VSラック板	1	A21-1	3	△	8KB
329	VS action pin VS作動ピン	1	A21-1	3	△	8KB
330-1	VS rack guide pin VSラックガイドピン	1	A21-1	3	△	8KB
331	VS rack guide pin B VSラックガイドピンB	1	A21-1	3	△	8KB
332	Guide pin A washer ガイドピンA座金	1	A21-1	3	△	8KB
333—1	PF coupling pin PF連動ピン	1	A21-1 A22-1	3	△	8KB
333—A	Coupling pin collar 連動ピンカラー，内径3種類あり	(1)	A21-1 A22-1	3	△	There inside dia. provided 8KB
334—1	PF coupling gear shaft PF連動ギア軸	1	A21-1 A22-1	3	△	8KB
334—A	Gear shaft washer A ギア軸ワッシャーA	1	A21-1 A22-1	3	△	8KB
334—B	" B " B	1	A21-1 A22-1	3	○△	8KB

Part No. 部品番号	Name and Shape 名称および形状	Pcs. per Unit 1台分個数	Reference Subassembly No. 参照部組品番号	Reference Fig. No. 参照図番	Term of Sale 販売区分	Remarks 備考
Blank 欠						
335—1	PF lever axle PFレバー軸	1	A21-1	3	△	8KB
337A—1	Clutch lever A rivet クラッチレバーAカシメピン	1	A21-1	3	△	8KB
337-1	FR clutch lever A FRクラッチレバーA	1	A21-1	3	△	8KB
338	FR clutch lever B FRクラッチレバーB	1	A21-1	3	△	8KB
339	FR clutch gear FRクラッチギア	1	A21-1	3	△	8KB
340	FR clutch gear shaft FRクラッチギア軸	1	A21-1	3	△	8KB
341	FR clutch lever B axle FRクラッチレバーB軸	1	A21-1	3	△	8KB
342	FR clutch lever axle FRクラッチ軸	1	A21-1	3	△	8KB
343-1	Clutch gear adjusting pin FRクラッチギアー調整ピン	1	A21-1	3	△	8KB
344-1	Clutch lever spring FRクラッチ用バネ	1	A21-1	3	○△	8KB
345-1	Clutch lever B spring FRクラッチレバーB用ねじりバネ	1	A21-1	3	△	8KB
346	Feed limiting gear 定尺ギアー	1	A21-1	3	△	8KB
347	Feed limiting contact plate 定尺ギアー用接点板	1	A21-1	3	△	8KB
348	Feed limiting gear axle 定尺ギア軸	1	A21-1	3	△	8KB

Part No. 部品番号	Name and Shape 名称および形状	Pcs. per Unit 1台分個数	Reference Subassembly No. 参照部組品番号	Reference Fig. No. 参照図番	Term of Sale 販売区分	Remarks 備考
349-1	Feed limiting contact mount 定尺接点台	1	A24-1 A26-1	3	△	7KB -6 / 8KB -5
350	Feed limiting spring contact 定尺接点バネ	3	A24-1 A26-1	3	△	8KB
Blank 欠						
352-1	FR printed circuit FRプリント基板	1	A24-1	3	△	7KB -6 / 8KB -5
353	FR change-over switch plate FR切換スイッチ作動板	1	A24-1, A25	3	△	8KB
354	FR switch contact spring FR切換接点バネ	3	A24-1, A25	3	△	8KB
355	FR opetating plate axle FR作動板用軸	2	A24-1	3	△	8KB
Blank 欠						
Blank 欠						
Blank 欠						
359	Eyelet ハトメ	2	A24-1	3	△	8KB
Blank 欠						
362	VS clutch gear A VSクラッチギア A		A21	3	△	7KB -1 / 8KB -1
362A	VS clutch gear VSクラッチギア	1	A21-1	3	△	7KB -1 / 8KB -1
363	VS clutch gear axle VSクラッチギア軸	1	A21-1	3	△	8KB

Part No. 部品番号	Name and Shape 名称および形状	Pcs. per Unit 1台分個数	Reference Subassembly No. 参照部組品番号	Reference Fig. No. 参照図番	Term of Sale 販売区分	Remarks 備考
Blank 欠						
365	Take-up shaft bearing 巻取軸受板	1	A21-1	3	○△	8KB
366	Take-up shaft A 巻取軸A	1	A21-1, A23	3	△	8KB
367	Take-up shaft B 巻取軸 B	1	A21-1, A23	3	△	8KB
368	Take-up gear 巻取りギアー	1	A21-1, A23	3	○△	8KB
369	Friction spring マサツバネ	1	A21-1, A23	3	○△	8KB
370	Take-up core 巻取軸コア	1	A21-1, A23	3	△	8KB
371	Take-up shaft cover 巻取軸コア	1	A21-1, A23	3	○△	8KB
372	Take-up shaft screw 巻取軸取付ピン	1	A21-1, A23	3	○△	8KB
373	Washer 調整ワッシャー	3	A21-1, A23	3	○△	8KB
373A	Spring washer 巻取軸バネワッシャー	1	A21-1	3	○△	8KB
374	Snap ring (E - 24) Eリング	1	A21-1	3	○△	8KB
375	Washer ワッシャー	2	A24-1	3	○△	#177 8KB
376	Snap ring (E - 13) Eリング	5	A21-1 A22-1×1 A24-1 ×2 A27×2	2, 3	○△	8KB
377	Terminal stand ターミナル取付ビス	1		1	○	8KB

Part No. 部品番号	Name and Shape 名称および形状	Pcs. per Unit 1台分個数	Reference Subassembly No. 参照部組品番号	Reference Fig. No. 参照図番	Term of Sale 販売区分	Remarks 備考
378	FR printed circuit stand FRプリント基板取付ビス	1		1, 3	○	8KB
379	FR mount plate stand FR基板取付ビス	1		3	○	8KB
380	Snap ring (E - 17) Eリング	2	A21-1, A23	3	○△	8KB
381-1	Screw ⊕ 2R—5 (3) 小ねじ	1	A27	2	○△	7KB -7×500 8KB -6×1500
382	Screw ⊕ 2Q—3 (3) 小ねじ	2	A27	2	○△	8KB
383	Tapping screw ⊕ 1.7R—5 (3) 小ねじ	1	A24-1	3	○△	8KB
Blank 欠						
385	Screw ⊕ 2R—3 (3) 小ねじ	9		2, 3	○	8KB
Blank 欠						
Blank 欠						
Blank 欠						
Blank 欠						
Blank 欠						
Blank 欠						
Blank 欠						

Part No. 部品番号	Name and Shape 名称および形状	Pcs. per Unit 1台分個数	Reference Subassembly No. 参照部組品番号	Reference Fig. No. 参照図番	Term of Sale 販売区分	Remarks 備考
401	Running speed dial base ダイヤル基板	1	E-1 E3-1	10	△	8KB
402-1	Rubber strip 露出補助ダイヤルゴム	2	E-1 E3-1 , E10	10	△	7KB -8×1700 8KB -7×1000
403	ASA bobbin ASA糸巻	1	E-1 E3-1	10	○△	8KB
404-1	ASA rack mount ASA切換ラック取付コマ	1	E-1 E3-1 , E4	10	△	7KB -10×400 8KB -8×1000
405	ASA change-over rack ASA切換ラック	1	E-1 E3-1 E4	10	△	8KB
406	Rack rivet ラックカシメピン	2	E-1 E3-1 , E4	10	△	8KB
407	ASA spring retainer ASAバネ掛けコマ	1	E-1 E3-1	10	○△	8KB
408	ASA rack shaft ASAラック軸	1	E-1 E3-1	10	○△	8KB
409	ASA slider ASAスライダー	1	E-1 E3-1	10	○△	8KB
410-1	Ratch ラッチ板	1		1	○	8KB
411	Rubber strip ゴム補助板	1	E-1 E3-1 , E10	10	△	8KB
412	Running speed dial コマ速ダイヤル	1		10	○	8KB
413	Running speed dial mount ダイヤル板	1	E-1 E3-1 , E10	10	△	8KB
414-1	Resistor attaching ring マイラはり付環	1	E-1 E3-1 , E8	10	△	7KB -10×1800 8KB -8×600
415-1	Exposure correct dial 露出補正ダイヤル	1	E-1 E3-1 , E9	10	△	7KB -9×200 8KB -7×1700

Part No. 部品番号	Name and Shape 名称および形状	Pcs. per Unit 1台分個数	Reference Subassembly No. 参照部組品番号	Reference Fig. No. 参照図番	Term of Sale 販売区分	Remarks 備考
416-1	ASA setting gear ASA設定歯車	1	E-1 E3-1	10	○△	7KB -8×1700 8KB -7×1000
417	ASA resistor brush holder マイラ抵抗ブラシ取付板	1	E-1 E3-1 , E7	10	△	8KB
418-1	Ratch spring ラッチバネ	1		1	○	8KB
419-2	Ratch axle ラッチ板回転ピン	1		1	○	7KB -4×1300 8KB -4×1300
420	ASA slider axle ASAスライダー軸	2	E-1 E3-1	10	△	8KB
421	ASA setting aux. claw ASA設定補助つめ	1		1	○	8KB
422	Bobbin shaft 糸巻軸	1	E-1 E3-1	10	△	8KB
423	Pulley axle 糸プーリー軸	2	E-1 E3-1	10	△	8KB
424	Filter displace lever shaft ADレバー軸	1	E-1 E3-1	10	△	8KB
425	ASA brush aux. plate ASAブラシ補助板	1	E-1 E3-1 E7		△	7KB -1 8KB -1
426	ASA resistor terminal brush マイラーターミナルブラシ	1	E-1 E3-1	10	○△	8KB
427	String pulley 糸プーリー	2	E-1 E3-1	10	△	8KB
428	Grounding spring アースバネ	1	E-1	10	○△	8KB
429	Running speed contact pin コマ速接点カシメピン	4	E-1 , E3-1 E5, E6	10	△	8KB
430	Washer コマ速接片ワッシャー	1	E-1 E3-1	10	○△	8KB

Part No. 部品番号	Name and Shape 名称および形状	Pcs. per Unit 1台分個数	Reference Subassembly No. 参照部組品番号	Reference Fig. No. 参照図番	Term of Sale 販売区分	Remarks 備考
431-1	Running speed dial shaft コマ速ダイヤル軸	1	E-1 E3-1	10	○△	7KB -10×1800 / 8KB -8×600
432-1	Running speed dial bearing コマ速ダイヤル軸受	1	E-1 E3-1	10	△	7KB -10×1800 / 8KB -8×600
433	Exposure correct dial pin 露出補正ダイヤルピン	1	E-1 E3-1 , E9	10	△	8KB
434	Running speed lock button コマ速ロックボタン	1		10	○	8KB
435	Running speed lock spring コマ速ロックバネ	1	E-1	10	○△	8KB
436	ASA setting spring ASAセットバネ	1				8KB
436-A	ASA setting aux. spring ASAセット補助バネ	1				8KB
437	Kick lever spring けとばしレバーバネ	1	E-1 E3-1	10	○△	8KB
438	Dial cover boss ダイヤルぶた軸	1	E-1 E3-1	10	○△	8KB
439-1	Dial center cover ダイヤルぶた	1		10	○	7KB -5 / 8KB -7
440	ASA actuating lever ASA L字板	1	E-1 E3-1	1	○△	8KB
441	Lock button pad ロックボタン用モルトプレン	1		10	○	8KB
442	Click spring 補正ダイヤルクリックバネ	1	E-1 E3-1	10	○△	8KB
443	Terminal brush holder ターミナルブラシ取付板	1	E-1 E3-1	10	○△	8KB
444	Brush washer ターミナルブラシ取付ワッシャ	1	E-1 E3-1	10	○△	8KB

Part No. 部品番号	Name and Shape 名称および形状	Pcs. per Unit 1台分個数	Reference Subassembly No. 参照部組品番号	Reference Fig. No. 参照図番	Term of Sale 販売区分	Remarks 備考
445	Rivet マイラーカシメピン	1	E-1 E3-1 , E8	10	△	8KB
446	Synthetic string テトロン糸	1	E-1 E3-1	10	○△	8KB
447	ASA resistor brush マイラー抵抗ブラシ	1	E-1 E3-1 , E7	10	△	8KB
448	Screw ⊕ 1.7R—2 (1) 小ねじ	2	E-1 E3-1	10	○△	8KB
449	Lighting slot pin ライテイングマウントピン	1	E-1 , E1	10	△	8KB
450	Screw ⊕ 1.7R—4 (1) 小ねじ	1	E-1 E3-1	1	○△	8KB
451	Screw ⊕ 1.7R—4 (1) 小ねじ	1	E-1 E3-1	10	○△	8KB
452	Snap ring (E - 17) Eリング	3	E-1 E3-1	10	○△	8KB
453	Screw ⊕1.4R—2 (3) 小ねじ	1	E-1 E3-1	10	○△	8KB
454	Screw ⊕ 1.7R-1.8 (3) 小ねじ	1	E-1 E3-1	10	○△	8KB
Blank 欠						
456	Screw ⊕ 2Q—4 (1) 小ねじ	1		1	○	8KB
457	Screw ⊕ 2Q—2.5 (3) 小ねじ	2		10	○	8KB
458	Filter key ライテイングマウントアダプター	1		10	◘	6KB #453 8KB
Blank 欠						

Part No. 部品番号	Name and Shape 名称および形状	Pcs. per Unit 1台分個数	Reference Subassembly No. 参照部組品番号	Reference Fig. No. 参照図番	Term of Sale 販売区分	Remarks 備考
677	Spring plate 視度調節ダイヤル板バネ	1		4	○	8KB
678	Finder prism holder ファインダープリズム支持金物	1	F3	13	△	6KB #1362 8KB
679	Prism retainer ファインダープリズム押え板	1	F3	13	△	8KB
680	Nut 調整ナット	1	F3	13	○△	8KB
681	Eyepiece tube 接眼金物	1		4	○	8KB
682	Eyecup 目当て	1		4	○	8KB
683	G24, 25, G26, 27 clip G24, 25, 26, 27押えバネ	2	F2	13	○△	8KB
Blank 欠						
685	G28 clip G28押えバネ	1	F1	13	○△	8KB
686	Eyepiece rivet 接眼鏡筒カシメピン	1	F1	13	△	8KB
687	Screw ⊕ 2R—10.5 (3) 小ねじ	1			○	7KB -6x300 8KB -5x1500
688A	Screw ⊕ 1.7R—3 (3) 小ねじ	2	F3	13	○△	8KB
688B	Screw ⊕ 1.7R—2.5 (3) 小ねじ	1		4	○	Dis.
688C-1	Screw ⊕ 2R—9.5 (3) 小ねじ	2		4	○	7KB -6x300 8KB -5x1500
Blank						

Part No. 部品番号	Name and Shape 名称および形状	Pcs. per Unit 1台分個数	Reference Subassembly No. 参照部組品番号	Reference Fig. No. 参照図番	Term of Sale 販売区分	Remarks 備考
701	TW switch contact (W-OFF) W—OFF スイッチ	1	D6	12	△	8KB
702	TW switch contact (T-OFF) T—OFFスイッチ	1	D6	12	△	8KB
703	TW switch contact contact (ON—OFF) TW.ON—OFスイッチ	1	D6	12	△	8KB
Blank 欠						
705	Limit switch base L.S基板	1	D6	12	○△	8KB
706	Screw ⊕ 2R—3.5 (3) 小ねじ	3	D6	12	○△	8KB
Blank 欠						
Blank 欠						
1801-1 (2801-1)	Grip casting グリップ鋳物	1	B	6	△	7KB -9×1000 8KB -7×2500
802	Grip cover グリップぶた	1	B, B9	6	△	8KB
803	Grip leatherette グリップ鋳物擬革	1	B	6	○△	8KB
804	Grip cover leatherette グリップぶた擬革	1	B, B9	6	○△	8KB
805	Shutter release button シャッターボタン	1	B	6	○△	8KB
805A	Shutter release button insert インサート金物	2	B		○△	7KB -5 8KB -5
806	Release bush レリーズブッシュ	1	B	6	○△	8KB

Part No. 部品番号	Name and Shape 名称および形状	Pcs. per Unit 1台分個数	Reference Subassembly No. 参照部組品番号	Reference Fig. No. 参照図番	Term of Sale 販売区分	Remarks 備考
807-1	Shutter release plate シャッター押し板	1	B	6	○△	7KB -8 8KB -6
808	RL plate RL板	1	B, B4	6	△	RL: Run, Lock 8KB
809	RL slide plate RLスライド板	1	B, B4	6	△	8KB
810-1	Shutter release switch contact 二マタスイッチ用バネ	1	B	6	○△	7KB -8 8KB -6
811-1	Shutter release mount plate シャッター押し板取付板	1	B	6	○△	7KB -7×1000 8KB -7
812-1	Switch printed circuit MスイッチEEスイッチ取付板	1	B	6	○△	7KB -8 8KB -6
813	PZ speed change gear PZ変速歯車	1	B, B3	6	△	8KB PZ: Power Zoom
814	PZ speed dial PZ変速ダイヤル	1	B	6	○△	8KB
815	PZ speed printed circuit PZ変速プリント板	1	B, B2	6	△	8KB
816	Manual switch base Mスイッチ基板	1	B, B6	6	△	8KB
817	EE switch base EEスイッチ基板	1	B, B7	6	△	8KB
818	RL slide pin A RLスライドピンA	1	B, B4	6	△	8KB
819	RL slide pin B RLスライドピンB	1	B, B4	6	△	8KB
820	Lock button Lボタン	1	B	6	○△	8KB
821	Run button Rボタン	1	B	6	○△	8KB

Part No. 部品番号	Name and Shape 名称および形状	Pcs. per Unit 1台分個数	Reference Subassembly No. 参照部組品番号	Reference Fig. No. 参照図番	Term of Sale 販売区分	Remarks 備考
822	RL click spring RLクリックバネ	1	B, B4	6	△	8KB
823	Click rivet RLクリックカシメピン	1	B, B4	6	△	8KB
824-1	Shutter release spring 押しボタンバネ	1	B	6	○△	7KB -8 8KB -6
825	PZ speed gear shaft 変速歯車回転軸	1	B, B2	6	△	8KB
826	PZ speed dial shaft ダイヤル回転ピン	1	B, B2	6	△	8KB
827-1	Shutter release plate guide pin シャッター押し板ガイドピン	2	B	6	○△	7KB -5 8KB -5×1000
828	PZ speed change switch PZ変速接片	1	B, B3	6	△	8KB
829-1	Shutter release switch spring 二マタスイッチ補助バネ	1	B	6	○△	7KB -8 8KB -6
830	Tapping screw ⊕2Q-4 (3) タッピンねじF型	2	B	6	○△	8KB
831	Tapping screw ⊕ 2R-3 (3) タッピンねじP型	2	B	6	○△	8KB
832	EE contact EE接点	2	B, B7	6	△	8KB
833	Motor switch contact Mスイッチ接片	1	B, B6	6	△	8KB
834	PZ speed dial frame PZダイヤル銘板	1	B	6	○△	8KB
835	Helical wire insert ヘリサートねじ	1	B	6	△	8KB
836	Washer ワッシャー	2	B		○△	7KB -5 8KB -5

Part No. 部品番号	Name and Shape 名称および形状	Pcs. per Unit 1台分個数	Reference Subassembly No. 参照部組品番号	Reference Fig. No. 参照図番	Term of Sale 販売区分	Remarks 備考
837	Grip cover lock screw グリップ錠ビス	1	B, B9	6	○△	8KB
838	Grip contact base plate グリップ接点板	1	B, B2	6	△	8KB
839	Grip contact グリップ接片	3	B, B2	6	△	8KB
840	Click plate クリック板	1	B		○△	7KB -8 ... 8KB -6
841	Grip contact rivet グリップ接点カシメピン	3	B, B2	6	△	8KB
842	Grip contact point グリップ接点	3	B, B2	6	△	8KB
843	Adjusting washer クリック調整ワッシャー	1	B		○△	7KB -8 ... 8KB -6
844	Washer シャッター押え板ワッシャー	2	B		○△	7KB -5 ... 8KB -5
845	Grip bottom plate グリップ底板	1		6	○	8KB
846	Battery carrier 電池カセット	1	B8	7	△	8KB
847	Contact A カセット接片A	1	B8	7	△	8KB
848	⊖ contact spring 電池 ⊖ 接点	6	B8	7	△	8KB
849	Contact B カセット接片B	4	B8	7	△	8KB
850	Contact C カセット接片C	6	B8	7	△	8KB
851	Contact D カセット接片D	1	B8	7	△	8KB

Part No. 部品番号	Name and Shape 名称および形状	Pcs. per Unit 1台分個数	Reference Subassembly No. 参照部組品番号	Reference Fig. No. 参照図番	Term of Sale 販売区分	Remarks 備考
852	Contact ring カセット接点A	3	B8	7	△	8KB
853	Battery contact A 電池接点A	10	B8	7	△	8KB
854	Battery contact B 電池接点B	3	B8	7	△	8KB
855	Dust proof spong モルトプレン	5	B×4	6	○△	8KB
856	Grip cover washer グリップふたワッシャー	1	B, B9	6	○△	8KB
857	Spong pad 孔穏し用モルトプレン	1	B	6	○△	8KB
858	Remote control connector contact コネクター接点	6	B, B1	6	△	8KB
859-1	Click ball クリックボール	1	B	6	○△	7KB -8 8KB -6
860	Snap ring (E - 17) E型リング	1	B	6	○△	8KB
861	Remote control socket グリップコネクター	1	B, B1	6	△	8KB
862	Screw⊕ 2Q-3 (3) 小ねじ	1	B	6	○△	8KB
863	Screw⊕ 1.7R-2.5 (3) 小ねじ	4	B	6	○△	8KB
864	Screw ⊕ 2R-3 (3) 小ねじ	4	B	6	○△	8KB
865	Screw ⊕ 2R-3.5 (3) 小ねじ	6	B	6	○△	8KB
866	Screw ⊕ 2R-5 (3) 小ねじ	2	B	6	○△	8KB

Part No. 部品番号	Name and Shape 名称および形状	Pcs. per Unit 1台分個数	Reference Subassembly No. 参照部組品番号	Reference Fig. No. 参照図番	Term of Sale 販売区分	Remarks 備考
867	Screw ⊕ 2.6R-20(1) 小ねじ	2		6	○	8KB
868	Screw ⊕ 2.6R-12 (1) 小ねじ	1		6	○	8KB
869	Rubber pad グリップ当りゴム	1	B	6	○△	#267 8KB
Blank 欠						
Blank 欠						
1002	Intermediate casting 中間鋳物	1	E-1	7,8,10	△	
1003	Lens mount casting レンズ取付鋳物	1	D1	7	△	
1004	Large cover 大カバー	1	J4	8	△	
1005	Small cover 小カバー	1	J9-1	8	△	
Blank 欠						
1007-1	Front upper cover 前上カバー	1	J6	8	△	-6×1000
1008	Front lower cover 前下カバー	1		8	○	
Blank 欠						
Blank 欠						
Blank 欠						

Part No. 部品番号	Name and Shape 名称および形状	Pcs. per Unit 1台分個数	Reference Subassembly No. 参照部組品番号	Reference Fig. No. 参照図番	Term of Sale 販売区分	Remarks 備考
1071	Large cover leatherette 大カバー装飾擬革	1		8	○	
1072	Small cover leatherette 小カバー装飾擬革	1		8	○	
1073	Large cover name plate 大カバー貼銘板	1	J4	8	○△	
1073A	Paper for #1073 大カバー貼銘板B接着紙	1	J4		○△	-9×1000
1074	Door name plate 横ぶた銘板	1		5	○	
1075	Front cover joint plate A 前上下カバー飾り板	1		8	○	
1076	Front cover joint plate B 前上下カバー飾り板B	1		8	○	
1077	Front cover joint plate C 前上下カバー飾り板C	1		8	○	
1078	Light conducting prism 明り取りプリズム	1		12	○	
1079	Battery checker window BCアクリル窓	1	J6, J7	8	△	
1080	Vinyl tube リード線集結用ビニールチューブ	1	B	6	○△	6KB #454
1081	Nut ナット	2	J6	8	○△	
1082	Checker button mount チエッカー押しボタン受	1	J6	8	△	
1083	Checker window mount チエッカー窓受け	1	J6, J7	8	○△	
1084	Meter scale illuminating window 明り取り窓	1	J6	8	○△	

Part No. 部品番号	Name and Shape 名称および形状	Pcs. per Unit 1台分個数	Reference Subassembly No. 参照部組品番号	Reference Fig. No. 参照図番	Term of Sale 販売区分	Remarks 備考
1085	Light baffle sponge A 遮光用モルトプレンA	1	J4	8	○△	
1086	Light baffle sponge B 遮光用モルトプレンB	1	J9-1	8	○△	
1087a	Lead wire (green) 単心ビニールコード (緑)	1	D8		○△	
1087b	Lead wire (red) φ0.8x75mm 単心ビニールコード (赤)	1	B, B2		○△	
1087c	Lead wire (grey) 0.8x210 " (灰)	1	B		○△	
1087d	Lead wire (red) 0.8x50 " (赤)	1	A30		○△	
1087e	Lead wire (black) 0.8x130 " (黒)	1	E-1		○△	
1087f	Lead wire (black) 0.8x105 " (黒)	2	B2, H1		○△	
Blank 欠						
1087h	Lead wire (yellow) 0.8x90 " (黄)	1	E-1 E3-1		○△	
1087i	Liad wire (yellow) 0.8x80 " (黄)	1	B, B1		○△	
1087j	Lead wire (yellow) 0.8x75 " (黄)	1	D8		○△	
1087k	Lead wire (green) 0.8x90 " (緑)	1	E-1 E3-1		○△	
1087ℓ	Lead wire (grey) 0.8x80 " (灰)	1	E-1 E3-1		○△	
1087m	Lead wire (grey) " 0.8x90 (灰)	1	E-1 E3-1		○△	

Part No. 部品番号	Name and Shape 名称および形状	Pcs. per Unit 1台分個数	Reference Subassembly No. 参照部組品番号	Reference Fig. No. 参照図番	Term of Sale 販売区分	Remarks 備考
1087n	Lead wire (brown) 単心ビニールコード (茶) φ0.8x85mm	1	E-1 E3-1		○△	
1087o	Lead wire (brown) " (茶) 0.8x130	1	D3-1		○△	
1087p	Lead wire (white) " (白) 0.8x85	1	B, B1		○△	
1087q	Lead wire (grey) " (灰) 0.8x150	1	A30		○△	
1087r	Lead wire (white) " (白) 0.8x65	1	E-1 E3-1		○△	
1087s	Lead wire (orange) " (橙) 0.8x85	1	B, B2		○△	
1087t	Lead wire (orange) " (橙) 0.8x75	1	A31		○△	
1087u	Lead wire (blue) " (青) 0.8x125	1	D3		○△	
1087v	Lead wire (blue) " (青) 0.8x85	1	E-1 E3-1		○△	
1087w	Lead wire (violet) " (紫) 0.8x75	1	E-1 E3-1		○△	
1087x	Lead wire (violet) " (紫) 0.8x100	1	A32		○△	
1087y	Lead wire (brown) " (茶) 0.8x105	1	E-1 E3-1		○△	
1087z	Lead wire (pink) " (桃) 0.8x75	1	A31		○△	
1088	Hole cover "	10		8	○	20FD11 #98
1089	Serial number plate ナンバープレート 77/401	1			※	

Part No. 部品番号	Name and Shape 名称および形状	Pcs. per Unit 1台分個数	Reference Subassembly No. 参照部組品番号	Reference Fig. No. 参照図番	Term of Sale 販売区分	Remarks 備考
1090a	Screw ⊕ 2R-3 (S) 小ねじ	8		8	○	
1090b	Screw ⊕ 2R-4.5 (3) 小ねじ	6		8, 12	○	
1090c	Screw ⊕ 2R-6 (3) 小ねじ	6		7, 12	○	
1090d	Screw ⊕ 2R-8 (3) 小ねじ	2			○	
1090e	Screw ⊕ 2R-4 (3) 小ねじ	10		8	○	
1090f	Screw ⊕ 2R-6 (3) 小ねじ	2			○	
1091a-1	Screw ⊕ 2Q-2(1) 小ねじ	2		8	○	-6×1000
Blank 欠						
1092-1	Screw ⊕ 1.7Q-2.5 (3) 小ねじ	4	J6	8	○△	
Blank 欠						
Blank 欠						
1095	Lens cap body レンズキャップ	1	J11		△	
1096	Lens cap name plate 表側銘板	1	J11		△	
1097	Lens cap inner plate 内側銘板	1	J11		△	
1098	Retaining ring 輪バネ	1	J11		△	

Part No. 部品番号	Name and Shape 名称および形状	Pcs. per Unit 1台分個数	Reference Subassembly No. 参照部組品番号	Reference Fig. No. 参照図番	Term of Sale 販売区分	Remarks 備考
Blank 欠						
Blank 欠						
1271	Battery checker printed circuit チエッカープリント板	1	A30		○△	
1272	Battery checker base plate チエッカーランプ基板	1	A31	12	○△	
1273	Light emitting diode (Type OLD 416) 発光ダイオード	1	A31	12	○△	
1274	Fixed resistor A (68Ω) チエック用抵抗A	1	A30		○△	
1275	Semi-fixed resistor B チエック用抵抗B	1	A30		○△	
1276	Fixed resistor C (2kΩ) チエック用抵抗C	1	A30		○△	
1277	Transistor (2SC373) チエック用トランジスター	1	A30		○△	
1278	Checker button チエッカ押しボタン	1		8	○	
1279	Checker lamp sponge bush チエッカーランプ用モルトプレン	1	A31	12	○△	
1280	Checker switch contact チエッカー接点バネ	1	A32	12	△	
1281	Fixed resistor D (560Ω) チエック用抵抗D	1	A30		○△	
1282	CdS cell Cds光電導セル	1	H1	9	△	
1283	Fixed resistor Rs (0.2-3.6kΩ) every 200Ω CdS補正抵抗Rs, 18種 200Ωとび	1			○	

Part No. 部品番号	Name and Shape 名称および形状	Pcs. per Unit 1台分個数	Reference Subassembly No. 参照部組品番号	Reference Fig. No. 参照図番	Term of Sale 販売区分	Remarks 備考
1284	Fixed resistor Rh (150-300 kΩ) every 50kΩ CdS補正抵抗Rh, 4種50kΩとび	1			○	
1285	Fixed resistor (1—1.4k) 1コマ補正抵抗, 5種0.1kΩとび	1	H1		○△	
1286	Vinyl tube 抵抗被ふく用ビニールチューブ	3	H1		○△	
1287	Screw ⊕ 2R-3 (3) 小ねじ	1		12	○	
1288	Screw ⊕ 2R-3.5 (3) 小ねじ	1		12	○	
1288A	Screw ⊕ 2R-3.5 (3) 小ねじ	2			○	
Blank 欠						
1290	Diode holder ダイオード取付基板	1	A31	12	○△	
1291	Zener diode ツエーナーダイオード	1	A30		○△	
1292	Screw ⊕ 1.4R-2.5 (S) 小ねじ	1	A31	12	○△	
Blank						
Blank						
1461	ASA resistor マイラー抵抗体	1	E-1 E3-1 , E8	10	△	
1462	Speed change printed circuit 変速プリント板	1	E-1 E3-1	10	○△	
1463	A-filter kick lever フイルターケットバシレバー	1	E-1 E3-1	10	△	

Part No. 部品番号	Name and Shape 名称および形状	Pcs. per Unit 1台分個数	Reference Subassembly No. 参照部組品番号	Reference Fig. No. 参照図番	Term of Sale 販売区分	Remarks 備考
1464	AD change-over lever AD切換レバー	1	E3-1 , E5	10	△	AD: Artificial-light/ Daylight
1465	AD printed circuit ADプリント板	1	E-1 E3-1	10	○△	
1466	Speed change contact mount コマ速接点板	1	E3-1 , E6	10	△	
1467	Speed change contact A コマ速接点A	1	E-1 E3-1 , E6	10	△	
1468	Filter slider guide フイルタースライダーガイド	2	E-1 E3-1	10	△	
1469	AD change-over spring AD切換バネ	1	E-1 E3-1	10	○△	
1470	Speed change contact B コマ速接点B	1	E-1 E3-1 , E6	10	△	
1471	AD change-over contact AD切換接点	1	E-1 E3-1 , E5	10	△	
1472	Lighting mount sub-plate ライテイングマウント付属板	1	E	10	○△	Dis. -3
1473	Printed circuit collar プリント板ワッシャー	3	E-1 E3-1	10	○△	
1474	Running speed dial コマ速銘板	1		10	○	
1475	Filter holder フイルターホルダー	1	D7	10	△	
1476	Filter kick spring フイルターケトバシバネ	1	D7	10	○△	
1477	Filter holder spring フイルターホルダーバネ	1	D7	10	○△	
1478	Filter retainer フイルター押え	1	D7	10	△	

Part No. 部品番号	Name and Shape 名称および形状	Pcs. per Unit 1台分個数	Reference Subassembly No. 参照部組品番号	Reference Fig. No. 参照図番	Term of Sale 販売区分	Remarks 備考
1479	A-filter Aフイルター	1	D7	10	△	
1480	Filter shaft フイルターワク回転軸	1	D7	10	△	
1481	AD lever spring ADレバー戻しバネ	1	E-1 E3-1	10	○△	
1482	Filter base plate フイルター基板	1	D7	10	△	
1483	Lighting mount ライテイングマウント	1	E-1 , E2	10	△	
1484	Lighting mount holder ライテイングマウントホルダ	1	E-1 , E2	10	△	
1485	Lighting slot spring ライテイングバネ	1	E-1 , E1	10	△	
1486	Lighting mount stopper pin ライテイングマウント制限ピン	2	E-1 , E2	10	△	
1487	Snap ring (E - 20) Eリング	1	D7	10	○△	
1488	Screw ⊕ 1.7R-5 (3) 小ねじ	2	E-1 E3-1	10	○△	
1489	Screw ⊕ 2R-3 (3) 小ねじ	12	E-1 E3-1	10	○△	
1490	Screw ⊕ 1.7R- 4.5 (3) 小ねじ	1	E-1 E3-1	10	○△	
1491	Screw ⊕ 2R-4 (3) 小ねじ	1	E-1	10	○△	
Blank 欠						
Blank 欠						

Part No. 部品番号	Name and Shape 名称および形状	Pcs. per Unit 1台分個数	Reference Subassembly No. 参照部組品番号	Reference Fig. No. 参照図番	Term of Sale 販売区分	Remarks 備考
1501	Manual lock shaft マニュアルロック軸	1	D5	12	○△	
1502-1	Manual lock bearing マニュアルロック軸受	1	D5	12	△	-7
1503-1	Manual lock mount マニュアルロック基板	1	D5	12	△	-7
1504	Click spring クリックバネ	1	D5	12	○△	31F3B #553
1505-1	Friction rubber point マサツゴム	1	D5	12	○△	-7×70
1506	EE lock / manual dial マニュアルロックダイヤル	1		12	○	
1507	Dial cover plate 貼銘板	1		12	○	
1508	Dial retaining screw ⊕ 2R-3.5 (3) ダイヤル固定用ビス	1		12	○	
1508-A	Dial retaining washer ダイヤル固定用ワッシャー	1			○	-9×1000
1509	Manual lock friction spring マニュアルロックマサツバネ	1	D5	12	○△	
1510	Screw ⊕ 2R-3.5 (3) 小ねじ	4		12	○	
Blank 欠						
1513-1	Servo-EE サーボ EE	1	H2	9	△	-10
1514	Servo-amp printed circuit サーボアンプ プリント配線板	1	H1		△	
1515	AM switch holder AMスイッチホルダー	1	D8	12	△	

Part No. 部品番号	Name and Shape 名称および形状	Pcs. per Unit 1台分個数	Reference Subassembly No. 参照部組品番号	Reference Fig. No. 参照図番	Term of Sale 販売区分	Remarks 備考
1516	AM switch contact A AMスイッチA	1	D8	12	△	
1517	AM switch contact B AMスイッチB	1	D8	12	△	
1518 (1518a)	AM switch contact point AMスイッチ接触子	1	D5	12	○△	
Blank 欠						
Blank 欠						
1601	Focusing ring 距離目盛リング	1		9	○	
1602	Distance scale 距離目盛銘板	1		9	○	
1603-1	Ist lens-group lens barrel 第一レンズ環	1	C	9	△	-3
1604-1	G3 lens case 第三レンズ金物	1	C	9	△	-3
1605	Ist group adjusting washer (t=0.5,0.3,0.2,0.1,0.09 0.08,0.07,0.06,0.05) 第一群調正ワッシャー	1	C	9	○△	
1606-1	G3 retaining ring G3押えリング	1	C	9	○△	-3
1607	Ist lens-group helicoid 第1群ヘリコイドリング	1	C	9	△	
1608-1	Main tube 本鏡筒	1	C	9	△	-5
1609	Index ring 指標環	1	C	9	○△	
1610	Cam ring A カムリングA	1	C	9	△	

Part No. 部品番号	Name and Shape 名称および形状	Pcs. per Unit 1台分個数	Reference Subassembly No. 参照部組品番号	Reference Fig. No. 参照図番	Term of Sale 販売区分	Remarks 備考
1611-1	Cam ring B カムリングB	1	C	9	△	-8
1612	Stopper ring 制限リング	2	C	9	○△	
1613	Zoom ring retainer ズームリング押え	1	C	9	○△	
161401	Zoom scale ring ズーム目盛リング	1	C	9	△	-7
1615	Macro-distance scale マクロ距離銘板	1	C	9	○△	
1616	Friction spring washer スリップマサツバネ	1	C	9	○△	
1617	Slip gear スリップギヤ	1	C	9	○△	
1618-1	2nd lens-group slide ring 第2群移動リング	1	C	9	△	-5
1619	2nd lens-group barrel 第2群レンズリング	1	C	9	△	
1620	2nd lens-group retainer 第2群レンズ押え	1	C	9	○△	
1621	2nd group adjusting washer (t=0.5,0.3,0.2.0.1,0.09 0.08,0.07,0.06,0.05) 第2群調整ワッシャー	1	C	9	○△	
1622	3rd lens-group slide ring 第3群移動リング	1	C	9	△	
1623	3rd lens-group barrel 第3群レンズ環	1	C	9	△	
1624	G7 spacer G7間隔環	1	C	9	○△	
1625	G7, G8 spacer G7, G8間隔環	1	C	9	○△	

Part No. 部品番号	Name and Shape 名称および形状	Pcs. per Unit 1台分個数	Reference Subassembly No. 参照部組品番号	Reference Fig. No. 参照図番	Term of Sale 販売区分	Remarks 備考
1626	3rd lens-group retainer 第3群レンズ押え環	1	C	9	○△	
1627	Click spring クリックスプリング	1	C	9	○△	8KB #2673
1628-1	3rd lens-group barrel 第3群レンズ押え	1	C	9	△	-7×1500
1629-1	G14AB prism holder G14ABプリズムホルダー	1	C	9	△	-7×1500
1630	G14AB retainer G14AB押え	1	C	9	○△	
1631	G10 lens case G10レンズ押え環	1	C	9	○△	
1632	Master lens barrel マスターレンズ押え	1	C, C3	9	△	
1633	G11, 12 lens spacer G11, 12レンズ間隔環	1	C, C3	9	○△	
1634	Master lens retainer マスターレンズ押え	1	C, C3	9	○△	
1635	Master lens holder マスターレンズホルダー	1	C, C3	9	△	
1636	Cam B bridge カムB用ブリッチ板	1	C	9	○△	Dis. -7
1637	CdS holder CdSホルダー	1	C5	9	△	
Blank 欠						
1639	G15AB prism retainer G15ABプリズム押え	1	C, C3	9	○△	
1640	Slide plate A スライド板A	3	C	9	△	

Part No. 部品番号	Name and Shape 名称および形状	Pcs. per Unit 1台分個数	Reference Subassembly No. 参照部組品番号	Reference Fig. No. 参照図番	Term of Sale 販売区分	Remarks 備考
1641	Slide plate B スライド板B	3	C	9	△	
1642	Light stopper 遮光板	1	C	9	○△	
1643	Cam ring A washer (t=0.05, 0.03) カム環A用ワッシャー	1	C	9	○△	
1644	Macro ring stopper マクロ回転制限板	1	C	9	○△	
1645	Click spring クリックバネ	1	C	9	○△	
1646	Click ball (Nylon) 1/8" クリックボール	1	C	9	○△	20FL2[illegible]1300 #59 8KB #2644
1647	Cam A bridge カムA用ブリッチ板	1	C	9	○△	Dis. -7×1001
1648	Cam-pin A カム軸A	1	C, C1	9	△	
1649-1	Cam-pin B カム軸B	1	C, C2-1	9	△	-5
1650	Cam-pin ring カム用リング	2	C, C1,C2-1	9	△	
1651	Cam-pin nut カム用環ナット	2	C, C1,C2-1	9	△	
1652	Cam locating pin カム目盛位置決めピン	1	C	9	○△	
1653-1	Zoom switch stopper A ズームスイッチストッパーA	1	C	9	○△	-8
1654-1	Zoom switch stopper B ズームスイッチストッパーB	1	C	9	○△	-8
1655	Stopper insulating tube ストッパー用絶縁チューブ	2	C	9	○△	

Part No. 部品番号	Name and Shape 名称および形状	Pcs. per Unit 1台分個数	Reference Subassembly No. 参照部組品番号	Reference Fig. No. 参照図番	Term of Sale 販売区分	Remarks 備考
1656	Stopper pin 制限ピン	1	C	9	○△	
1657	Set screw (2U-4) セットねじ	2		9	○	
1658	Zooming stopper ズーム回転制限板	2	C	9	○△	
1659	B.f adjusting washer (t=0.7,0.5,0.3,0.2 0.1,0.09,0.08,0.07 0.06,0.05) 調整ワッシャー	6		12	○	8KB #2569
1659A	Adjusting washer (t=0.3,0.4, 0.5, 0.6 0.7) 調整ワッシャー	4			○	
1660	Zoom lever A ズームレバーA	1	C4	9	△	
1661	Zoom lever B ズームレバーB	1	C4	9	△	
1662	Zoom lever friction spring レバー摩擦バネ	1	C4	9	△	
1663	Taper pin (TP1-4) テーパーピン	1	C4	9	△	
1664	Screw ⊕ 2R-2(1) 小ねじ	1	C	9	○△	
1665	Click spring screw クリック止ビス	2	C	9	○△	
Blank 欠						
1667	Screw ⊕ 2R-4 (3) 小ねじ	6	C×4	9	○△	
1668	Screw ⊕ 2R-13.8 (3) 小ねじ	3	C	9	○△	
1669	Screw ⊕ 2Q-6 (3) 小ねじ	1	C	9	○△	

Part No. 部品番号	Name and Shape 名称および形状	Pcs. per Unit 1台分個数	Reference Subassembly No. 参照部組品番号	Reference Fig. No. 参照図番	Term of Sale 販売区分	Remarks 備考
1670	Screw ⊕ 1.7R-2.5 (3) 小ねじ	4	C	9	○△	
1671	Screw ⊕ 1.7R-3(3) 小ねじ	5	C	9	○△	
1672	Screw ⊖ 1.7Q-3 (45°) 小ねじ	8	C	9	○△	
1672A	Screw ⊖ 1.7Q-2.3 (45°) 小ねじ	1	C	9	○△	
1673	Screw 1.7P-3 (45°) 小ねじ	3		9	○	
Blank 欠						
Blank 欠						
Blank 欠						
Blank 欠						
Blank 欠						
1689	Finder prism holder フアインダープリズムホルダー	1	F3	12	△	
1690	G18, 19 retainer G18, 19押え	1	F3	12	○△	
1691	Split prism holder retainer 焦点鏡押えバネ	1		12	○	
1692-1	Split prism holder フアインダー焦点鏡	1	F4	12	△	
1693	Finder field mask フアインダーマスク	1	F4	12	△	

Part No. 部品番号	Name and Shape 名称および形状	Pcs. per Unit 1台分個数	Reference Subassembly No. 参照部組品番号	Reference Fig. No. 参照図番	Term of Sale 販売区分	Remarks 備考
1694	Finder intermediate tube (A) フアインダー中間鏡筒A	1	F2	12	△	
1695	Finder intermediate tube(B) フアインダー中間鏡筒B	1	F2	12	△	
1696	Eyepiece lens tube 接眼鏡筒	1	F1	12	△	
1697-1	Meter needle prism holder F指針プリズムホルダー	1	F5	12	△	
1698	Eyepiece lens case 接眼レンズホルダー	1	F1	12	△	
1699	G16, G17 washer G16, 17受けワッシャー	1	F3	12	○△	
1700A	Screw ⊕ 2R-2.5 (3) 小ねじ	4		12	○	
1700B	Set screw 2U-5 セットねじ	3	F3	12	○△	
1700C	Set screw 1.4US-1.5 セットねじ	1	F2	12	○△	
Blank 欠						
Blank 欠						
Blank 欠						
Blank 欠						
1721-1	PZ motor mount PZウオーム軸	1	D3-1	11	△	-3×451
1722-1	PZ motor gear PZモーターギア	1	D4	11	○△	-4×801

Part No. 部品番号	Name and Shape 名称および形状	Pcs. per Unit 1台分個数	Reference Subassembly No. 参照部組品番号	Reference Fig. No. 参照図番	Term of Sale 販売区分	Remarks 備考
1723-1	PZ motor PZモーター	1	D4-1	11	○△	8KB #2723 -4x801
1724	PZ 3rd gear PZ第3ギア	1	D3-1	11	△	
1725-1	PZ worm shaft PZウオーム軸	1	D3-1	11	△	-9
1726	PZ 2nd gear shaft PZ第2ギア軸	1	D3-1	11	△	
1727	PZ worm PZウオーム	1	D3	11	△	Dis. -9
1728	PZ 4th gear shaft PZ第4ギア軸	1	D3-1	11	○△	
1729	PZ 2nd gear A shaft PZ第2ギア軸	1	D3-1	11	△	
1730	PZ 4th gear PZ第4ギア	1	D3-1	11	○△	
Blank 欠						
1732	PZ 5, 6th gear axle PZ第5, 6ギア軸	3	D3-1	11	△	
1733	PZ 5th gear PZ第5ギア	1	D3-1	11	△	
1734	PZ see-saw plate PZシーソー板	1	D3-1	11	△	
1735	PZ 6th gear PZ第6ギア	2	D3-1	11	△	
1736	PZ worm axle PZウオーム軸	1	D3-1	11	△	
1737	4th gear bracket 第4ギア軸受け	1	D3-1	11	○△	

Part No. 部品番号	Name and Shape 名称および形状	Pcs. per Unit 1台分個数	Reference Subassembly No. 参照部組品番号	Reference Fig. No. 参照図番	Term of Sale 販売区分	Remarks 備考
1753	PZ slide plate pin PZスライド板ピン	1	D2	11	△	
1754	PZ slide plate guide PZスライドガイド	2	D2	11	△	
1755	PZ slide plate PZスライド板	1	D2	11	△	
1756	PZ knob PZツマミ	1	D2	11	△	
Blank 欠						
Blank 欠						
1759	Snap ring Eリング	2	D3-1	11	○△	
1760	Screw ⊕ 2Q-3 (3) 小ねじ	4	D2x1	11	○△	
1761	Screw ⊕ 1.7R-2.5 (3) 小ねじ	4	D3-1	11	○△	
1762	Screw ⊕ 2R-3 (3) 小ねじ	4		11	○	
Blank 欠						
Blank 欠						
Blank 欠						
Blank 欠						
Blank 欠						

Part No. 部品番号	Name and Shape 名称および形状	Pcs. per Unit 1台分個数	Reference Subassembly No. 参照部組品番号	Reference Fig. No. 参照図番	Term of Sale 販売区分	Remarks 備考
1738	PZ switch mount PZスイッチ板	1	D3-1	11	△	
1739	PZ see-saw clutch spring PZシーソークラッチバネ	1	D3-1	11	○△	
1740	PZ 2nd gear PZ第2ギア	2	D3-1	11	○△	
1741	Spring pin B スプリングピンB	1	D3-1	11	△	#111
Blank 欠						
1743	PZ switch contact PZスイッチ接点	1	D3-1	11	△	
1744	PZ switch rivet PZスイッチカシメピン	2	D3-1	11	△	
1745	PZ switch printed circuit PZスイッチプリント板	1	D3-1	11	○△	
1746	PZ switch insulator PZ接点絶縁シート	1	D3-1	11	△	
1747	PZ worm bearing PZウオーム軸受け	1	D3-1	11	○△	
1748	Bearing ball 1／16″ 軸受ボール	1	D3-1	11	○△	#199
1749	PZ ball bearing PZボール軸受	1	D3-1	11	△	
1750	PZ switch base plate PZスイッチ基板	1	D2	11	△	
1751	PZ switch spring PZスイッチバネ	1	D2	11	○△	
1752	PZ switch spring stand PZスイッチバネ掛け	1	D2	11	△	

Part No. 部品番号	Name and Shape 名称および形状	Pcs. per Unit 1台分個数	Reference Subassembly No. 参照部組品番号	Reference Fig. No. 参照図番	Term of Sale 販売区分	Remarks 備考
G1	Lens レンズ	1	C, L1	9	△	
G2	Lens "	1	C, L1	9	△	
G3	Lens "	1	C	9	△	
G4	Lens "	1	C	9	△	
G5	Lens "	1	C, L2	9	△	
G6	Lens "	1	C, L2	9	△	
G7	Lens "	2	C	9	△	
G8	Lens "	1	C, L3	9	△	
G9	Lens "	1	C, L3	9	△	
G10	Lens "	1	C	9	△	
G11	Lens "	1	C, C3	9	△	
G12	Lens "	1	C, C3, L6	9	△	
G13	Lens "	1	C, C3, L6	9	△	
G14A	Half mirror ハーフミラー	1	C, L4	9	△	
G14B	Half mirror "	1	C, L4	9	△	

Part No. 部品番号	Name and Shape 名称および形状	Pcs. per Unit 1台分個数	Reference Subassembly No. 参照部組品番号	Reference Fig. No. 参照図番	Term of Sale 販売区分	Remarks 備考
G15A	Half mirror ハーフミラー	1	C, C3, L5	9	△	
G15B	Half mirror "	1	C, C3, L5	9	△	
G16	Lens レンズ	1	C, L4	9	△	
G17	Lens "	1	C, L4	9	△	
G18	Lens "	1	F3, L7	12	△	
G19	Lens "	1	F3, L7	12	△	
G20	Prism プリズム	1	F3	12	△	
G21	Lens レンズ	1	F4	12	△	
G22	Split prism reticule スプリット焦点板	1	F4	12	△	
G23	Lens レンズ	1	F4	12	△	
G24	Lens "	1	F2, L8	12	△	
G25	Lens "	1	F2, L8	12	△	
G26	Lens "	1	F2, L9	12	△	
G27	Lens "	1	F2, L9	12	△	
G28	Lens "	1	F1	12	△	

7KB - R.2082.A

Part No. 部品番号	Name and Shape 名称および形状	Pcs. per Unit 1台分個数	Reference Subassembly No. 参照部組品番号	Reference Fig. No. 参照図番	Term of Sale 販売区分	Remarks 備考
G29	Lens レンズ	1	F1, L10	12	△	
G30	Lens "	1	F1, L10	12	△	
G31	Scale prism スケールプリズム	1	F5	12	△	
G32	Lens レンズ	1	C, C3, L5	9	△	
G33	Lens "	1	C5	9	△	

2. **Subassembly list**

部組品一覧表

7KB - R.2082.A

No. of Subassembly 部組品番号	Name 名称	Pcs. per Unit 1台分個数	No. of Constituent parts 構成部品番号	Reference Fig. No. 参照図番	Remarks 備考
A1	Aperture plate アパーチャープレート部	1	20, 21, 22	4	8KB-A1
A2	Claw cam shaft クローカム軸部	1	104, 105, 109, 111x4, 112 113, 114, 115, 116, 117 198x10, 252	1	8KB-A2
A3	Stop switch 位相スイッチ部	1	106, 107, 190, 191x2, 59リ 59カ	1	
A4	Shutter sector セクター軸部	1	110, 118x2, 119, 120, 121 122, 123, 126	1	8KB-A3
A5	Film drive motor 駆動モーター部	1	101, 102, 103, 247, 248, 249 264x3, 265x2, 266, 267-1	1	8KB-A5
A6-1	Magnet release マグネットレリーズ部	1	135, 136, 137, 138, 139, 140 141, 142, 143, 144, 145 146x2, 147x5, 148, 149, 150 151, 152x2, 153, 154, 155 177, 190, 191, 250x2, 255x2 256, 261x2, 59ナ, 59オ, 59ヲ 59ム, 262	2	8KB-A6
A7	VS signal lever V.Sシグナルレバー	1	186, 187, 251	1	8KB-A7
A8	Capacitor コンデンサー	1	194, 195	1	8KB-A8
A9	Counter zero-return 計尺0戻し部	1	181, 182, 183, 184	1	8KB-A9
A10-1	Counter coupling shaft 計尺連動軸	1	111x3, 160-1, 161-1, 162 163	1	8KB-A10-1
A11	Counter dial 計尺目盛	1	168, 170, 171, 172, 173, 174-1, 175, 176-1, 177, 178 179, 180, 181, 185, 254x2	2	8KB-A11
A12	Synch contact ストロボスイッチ	1	188, 189, 190, 191x2, 192 193, 59 , 59	1	8KB-A12
A13	Synch socket シンクロターミナル	1	156, 157-1x2, 158-1	1	8KB-A13

Subassembly list

部組品一覧表

7KB - R.2082.A

No. of Subassembly 部組品番号	Name 名称	Pcs. per Unit 1台分個数	No. of Constituent parts 構成部品番号	Reference Fig. No. 参照図番	Remarks 備考
A14	VS signal lever VSフラックレバー	1	216, 217, 224		8KB-A14
A15	Film end signal 赤マーク部	1	204, 229, 230, 232×2	1	8KB-A15
A16	FOW ratchet Fラチエット部	1	211, 213, 214	1	8KB-A16
A17	REW ratchet Rラチエット部	1	212, 213, 214	1	8KB-A17
A18	Eyepiece mount 接眼受台	1	177, 240, 241, 242, 243, 244 245, 246, 251	4	8KB-A18
A19	Eyepiece shutter アインダーシャッターレバー	1	234, 235, 236, 237, 238 251×2	1	8KB-A19
A20	Claw クロー	1	129, 131	1	8KB-A20
A21-1	FR drive unit FR 駆動部	1	A22-1, A23, 321, 326-1,328 329, 330-1 335-1, 331, 332 337-1, 337A-1, 338, 339, 340 341, 342, 343-1, 344-1, 345-1, 346, 347, 348, 362 363, 365, 373, 374, 380 373A, 362A	3	8KB-A21-1
A22-1	PF lever PF レバー	1	322-1, 324-1, 325, 327-1 333-1, 333-A, 334-1, 334-A 334-B, 376	3	8KB-A22-1
A23	Take-up shaft 巻取軸部	1	366, 367, 368, 369, 370, 371 372, 373×2, 380	3	8KB-A23
A24-1	FR printed circuit FRプリント基板	1	A25, A26-1, 352-1, 355×2 359×2, 375×2, 383, 59ｺ, 376×2, 59ｳ, 59ﾆ, 59A	3	8KB-A24-1
A25	FR change-over switch FR切換スイッチ作動板	1	353, 354×3	3	8KB-A25
A26-1	Limit feading contact 定尺接点台	1	349-1, 350×3	3	8KB-A26-1

Subassembly list
部組品一覧表

7KB - R.2082.A

No. of Subassembly 部組品番号	Name 名称	Pcs. per Unit 1台分個数	No. of Constituent parts 構成部品番号	Reference Fig. No. 参照図番	Remarks 備考
A27	FR operating unit FR 操作部	1	A28, A29, 301-1, 302-1, 303 304-1, 305x2, 307, 308, 309 310, 311, 313-3, 314x2,313B 376x2, 381-1, 382x2, 313A	2	8KB-A27
A28	OL change-over guide plate OL切換ガイド板	1	315, 317	2	8KB-A28
A29	FR change-over guide plate FR切換ガイド板	1	316, 317	2	8KB-A29
A30	Checker circuit チエックアンプ部	1	1271, 1274, 1275, 1276, 1277 1281, 1291, 1087d, 1087q 59ﾍ, 59ﾄ	1	
A31	Check lamp チエックランプ部	1	1272, 1273, 1279, 1290, 1292 1087t, 1087z	12	
A32	Checker switch contact チエック接点部	1	190, 191, 1280, 1087x	12	
B	Grip グリップ本体部	1	B1, B2, B3, B4, B6, B7, B9 1801-1, 803, 805, 806, 807-1 810-1, 811-1 812-1, 814 820, 821, 824-1, 827-1x2 829-1, 830x2, 831x2, 834 835, 855x4, 857, 860, 862, 863x4, 864x4, 865x6, 866x2 869, 1080, 1087c, 59ｲ, 59ﾛ 59ﾇ, 59ﾜ, 59ﾚ, 59ｯ, 59ﾗ 59ﾀ, 805A, 836x2, 840, 843 844x2, 859-1	6	
B1	Remote control socket グリップコネクター部	1	858, 861, 1087i, 1087p, 59ﾊ 59ﾙ, 59ﾈ	6	
B2	Grip contact グリップ接点板部	1	815, 825, 826, 838, 839x3 841x3, 842x3, 1087b, 1087fx1 1087s 59B, 59C, 59D	6	
B3	PZ speed change gear PZ変速ギア	1	204, 813, 828	6	8KB-B3
B4	RL slide plate RLスライド板	1	808, 809, 818, 819, 822 823	6	8KB-B4
B6	Manual switch M スイッチ部	1	204x2, 816, 833	6	8KB-B6

Subassembly list
部組品一覧表

7KB - R.2082.A

No. of Subassembly 部組品番号	Name 名称	Pcs. per Unit 1台分個数	No. of Constituent parts 構成部品番号	Reference Fig. No. 参照図番	Remarks 備考
B7	EE switch EEスイッチ部	1	204×4, 817, 832×2	6	8KB-B7
B8	Battery carier カセット部	1	846, 847, 848×6, 849×4, 850×6, 851, 852×3, 853×10 854×3	7	8KB-B8
B9	Grip cover グリップふた部	1	802, 804, 837, 856	6	8KB-B9
C	Lens assembly 鏡　玉　部	1	C1, C2-1, C3, 1603-1,1604-1 1605, 1606-1, 1607, 1608-1 1609, 1610, 1611-1, 1612×2 1613, 1614-1, 1615, 1616 1617, 1618-1, 1619, 1620 1621, 1622, 1623, 1624, 1625, 1626, 1627, 1628-1 1629-1, 1630, 1631, 1640×3 1641×3, 1642, 1643, 1644 1645, 1646, 1652, 1653-1 1654-1, 1655×2, 1656 1658×2, 1664, 1655×2,1667×4 1668×3, 1669, 1670×4,1671×5 1672×8, 1672A, L1, L2, L3 L4, G3, G4, G7×2, G10	9	
C1	2nd lens-group cam pin 2群ピン	1	1648, 1650, 1651	9	
C2-1	3rd lens-group cam pin 3群ピン	1	1649-1, 1650, 1651	9	
M C3	Master lens マスター部	1	1632, 1633, 1634, 1635,1639 L5, L6, G11	9	
C4	Zoom lever ズームレバー	1	1660, 1661, 1662, 1663	9	8KB-C4
C5	CdS holder CdSホルダー	1	1637, G33	9	
D1	Lens mount casting 鏡玉支持鋳物部	1	1003, 55×4	7	
D2	PZ switch PZ操作部	1	1750, 1751, 1752, 1753 1754×4, 1755, 1756, 1760	11	

Subassembly list
部組品一覧表

7KB - R.2082.A

No. of Subassembly 部組品番号	Name 名称	Pcs. per Unit 1台分個数	No. of Constituent parts 構成部品番号	Reference Fig. No. 参照図番	Remarks 備考
D3-1	PZ moter mount PZ 駆動部	1	1721-1, 1724, 1725-1, 1726 1728, 1729, 1730, 1732x3 1733, 1734, 1735x2, 1736 1737, 1741, 1738, 1739,1743 1740x2, 1744x2, 1745, 1746 1747, 1748, 1749, 1759x2 1761x4, 1087o, 1087u	11	
D4-1	PZ moter PZモーター部	1	1722-1, 1723-1	11	
D5	Manual lock EEマニュアルロック	1	1501, 1502-1, 1503-1, 1504 1505-1, 1509, 1018	12	
D6	Limit switch リミットスイッチ	1	190, 191x3, 701, 702, 703 705, 706	11	8KB-D6
D7	AD filter フイルター部	1	1475, 1476, 1477, 1478, 1479 1480, 1482, 1487	10	
D8	A-M switch AMスイッチ部	1	1515, 1516, 1517, 1087a 1087j	12	
E-1	Intermediate casting 中間胴部	1	E1, E2, E3-1(E4, E5, E6, E7 E8, E9, E10), 56, 428, 435 1002, 1489x9, 1491, 1087e	10	
E1	Lighting mount spring ライテイングマウントバネ	1	449, 1485	10	
E2	Lighting mount ライテイングマウント部	1	1483, 1484, 1486x2	10	
E3-1	Running speed dial unit ASAコマ数切換部	1	E4, E5, E6, E7, E8, E9, E10 401, 403, 407, 408, 409 416-1 420x2, 422, 423x2,424 426, 427x2, 430, 431-1, 432-2, 436, 436A, 437, 438 440, 442, 443, 444, 446, 448x2, 450, 451, 452x3, 453 454, 1462, 1463, 1465, 1469 1468x2, 1473x3, 1481,1488x2 1489, 1490, 1087h, 1087k 1087ℓ, 1087m, 1087n, 1087r 1087v,1087w, 1087y	10	
E4	ASA change-over rack ASA切換ラック	1	404-1, 405, 406x2	10	8KB-E4

Subassembly list

部組品一覧表

7KB - R.2082.A

No. of Subassembly 部組品番号	Name 名称	Pcs. per Unit 1台分個数	No. of Constituent parts 構成部品番号	Reference Fig. No. 参照図番	Remarks 備考
E5	AD change-over lever AD切換レバー部	1	429×2, 1464, 1471	10	
E6	Speed change switch contact コマ速接点部	1	429×2, 1466, 1467, 1470	10	
E7	ASA resistor brush マイラ抵抗ブラシ部	1	417, 447, 425	10	8KB-E7
E8	ASA resistor マイラ抵抗部	1	414-1, 445, 1461	10	
E9	Exposure correct dial 露出補正ダイヤル	1	415-1, 433	10	8KB-E9
E10	Running speed dial ring ダイヤル板部	1	402-1×2, 411, 413	10	8KB-E10
F1	Eyepiece 接眼鏡筒部	1	685, 686, 1696, 1698, G28 L10	12	
F2	Finder middle tube 中間鏡筒部	1	683×2, 1694, 1695, 1700C L8, L9	12	
F3	Finder prism プリズム部	1	678, 679, 680, 688A×2,1689 1690, 1700B×3, 1699, L7, G20	12	
F4	Split prism スプリット部	1	1692-1, 1693, G21, G22, G23	12	
F5	Meter needle prism holder F指針プリズムホルダー部	1	1697-1, G31		
H1	Servo-amplifier サーボアンプ部	1	1282, 1285, 1286, 1514, 1515A, 1087f		
H2	Servo-EE サーボEE部	1	1513-1	9	
J1	Cartridge chamber door 横ぶた部	1	J2, J3, 6-1, 12, 23-2, 23A 24-1, 25, 26, 28-1, 31, 32 57×2, 61×4, 64a×4	5	8KB-J1

Subassembly list
部組品一覧表

7KB - R.2082.A

No. of Subassembly 部組品番号	Name 名称	Pcs. per Unit 1台分個数	No. of Constituent parts 構成部品番号	Reference Fig. No. 参照図番	Remarks 備考
J2	Door key 鍵軸部	1	27-1, 29, 30	5	8KB-J2
J3	Door hinge 蝶番部	1	33, 34, 35	5	8KB-J3
J4	Large cover 大カバー部	1	J5, 13, 38-1, 39, 40-1, 41 45, 58, 67, 1004, 1073, 1085, 13A, 39A, 1073A	8	
J5	Footage counter window 計尺窓部	8	36, 37	8	8KB-J5
J6	Front upper cover 前上カバー	1	J7, J8, 1007-1, 1081x2 1082, 1084, 1092-1x4	8	
J7	Battery checker window チエッカー窓部	1	1079, 1083	8	
J8	Accessory shoe アクセサリーシュー部	1	42, 43, 44	8	8KB-J8
J9-1	Small cover 小カバー部	1	1005, 1086	8	
J10	Wrist strap リストストラップ部	1	49, 50, 51, 52, 53-1x2 54-1x2	4	8KB-J10
J11	Lens cap レンズキャップ部	1	1095, 1096, 1097, 1098		○
L1	Front lens 前玉レンズ部	1	G1, G2	9	
L2	2nd lens-group 第2群レンズ	1	G5, G6	9	
L3	3rd lens-group 第3群レンズ	1	G8, G9	9	
L4	Finder half-mirror ファインダー系 ハーフミラー	1	G14A, G14B, G16, G17	9	

Subassembly list

部組品一覧表

7KB - R.2082.A

No. of Subassembly 部組品番号	Name 名称	Pcs. per Unit 1台分個数	No. of Constituent parts 構成部品番号	Reference Fig. No. 参照図番	Remarks 備考
L5	CdS half-mirror CdS系ハーフミラー	1	G15A, G15B, G32	9	
L6	Master lens マスター部レンズ	1	G12, G13		
L7	Finder relay lens ファインダーリレーレンズ	1	G18, G19	12	
L8	Finder lens A ファインダー系レンズA	1	G24, G25	12	
L9	Finder lens B ファインダー系レンズB	1	G26, G27	12	
L10	Eyepiece lens 接眼レンズ	1	G29, G30	12	